FORM NO. 3320-574

TORO

MODEL NO. 16403 - 1000001 & UP
MODEL NO. 16404 - 1000001 & UP

OPERATOR'S MANUAL

21" (0.53 M) HP & SP SIDE DISCHARGE

FINGERTIP START

⚠ SAFETY INSTRUCTIONS

BEFORE OPERATING

1. Read this manual carefully before operating the mower. Become familiar with the controls and proper use of the mower. Never allow children to operate the mower or adults to operate it without proper instructions.
2. Keep everyone, especially children and pets, away from area of operation. Thoroughly inspect area where mower will be used and remove sticks, stones, wire, and debris.
3. Wear long pants and substantial shoes. Do not operate mower while wearing open sandals or when barefoot.
4. Always wear safety glasses or eye shields during operation to protect eyes from foreign objects that may be thrown from the machine.
5. Check fuel level before starting engine. Do not fill fuel tank indoors, when the engine is running, or until engine cools for several minutes after running. Wipe up spilled gasoline before starting engine.
6. Keep all guards, shields, and safety devices in place. Repair or replace defective or damaged parts, including decals. Check all safety devices before each use.
7. Engine and blade are designed to stop when engine kill control bar is released. Ensure engine kill control bar and brake function properly before each use of mower.

WHILE OPERATING

8. Do not run engine indoors.
9. Always maintain secure footing. Keep a firm grip on the handle and walk; never run. Never operate mower in wet grass. Mow only in daylight or in good artificial light.
10. Mow across the face of slopes; never up and down. Use extreme caution when changing direction on slopes. Do not mow excessively steep slopes.
11. Keep face, hands, and feet away from the mower housing and cutter blade when the engine is running. Stay behind the handle until the engine stops and keep clear of discharge opening at all times.
12. During operation, grass deflector or complete bagging assembly must be installed on mower.
13. Shut engine off and wait for all moving parts to stop before removing grass bag.
14. Since the blade rotates for a few seconds after the control bar is released, stay behind the handle until all moving parts stop.
15. After striking a foreign object or if mower vibrates abnormally, stop engine and remove wire from spark plug. Check mower for damage and make all repairs before using mower again.
16. Stop the engine before adjusting the height-of-cut.
17. If a gravel driveway, road or sidewalk must be crossed, stop the engine so loose sand and rocks are not thrown.
18. Stop engine before leaving the operator's position—behind the handle. Disconnect wire from spark plug if mower will be unattended.
19. Do not touch muffler or engine while they are running or shortly after they have stopped because muffler and engine will be hot enough to cause a burn.

©The Toro Company-1991

SAFETY INSTRUCTIONS

MAINTENANCE

20. Perform only those maintenance instructions described in this manual. If major repairs are ever needed or if assistance is desired, contact your local Authorized TORO Service Dealer.

21. Before mower is cleaned, inspected, serviced, or adjusted, stop engine and disconnect wire from spark plug. Keep wire away from plug to prevent accidental starting.

22. To ensure the mower is in safe operating condition, frequently check and keep all nuts, bolts, and screws tight. Ensure blade bolt is tightened to proper specifications.

23. To reduce fire hazard, keep engine free of excessive grease, grass, leaves, and accumulation of dirt.

24. Check optional grass catcher bag frequently for wear or deterioration. If worn, replace with a new bag for your protection.

25. Allow engine to cool before storing mower in any enclosure. Do not store mower near any open flame or where gasoline fumes may be ignited by a spark.

26. Do not overspeed the engine by changing governor settings.

27. At the time of manufacture, the mower conformed to the safety standards in effect for rotary mowers. To ensure best performance and continued safety certification of the mower, use genuine TORO replacement parts and accessories. Replacement parts and accessories made by other manufacturers may result in non-conformance with the safety standards, and that could be dangerous.

SAFETY SYMBOL GLOSSARY

Safety decals and instructions are easily visible to the operator and are located near any area of potential danger. Replace any decal that is damaged or lost.



Safety alert



Read and understand operator's manual



Keep hands/feet away from blade



Keep hands away



Keep bystanders from mowing area



Stop engine before leaving operator position



Keep all guards in place



Hold control bar against handle to RUN/DRIVE. Release control bar to stop.

TABLE OF CONTENTS

	Page
Set-Up Instructions	3
Before Operating	4
Operating Instructions	5
Maintenance	7
Servicing Air Cleaner	7
Changing Crankcase Oil	8
Replacing Spark Plug	8
Cleaning Mower Housing	9
Draining Gasoline	9
Inspecting/Removing/ Sharpening Blade	9
Lubrication	10
Checking Transmission Oil Level	11
Adjusting Wheel Drive Control	11
Adjusting Blade Brake	12
Preparing Mower For Storage	12
Optional Equipment	13
Product Identification	13
Toro Service Support	13
Maintenance Record	14

SET-UP INSTRUCTIONS

INSTALL HANDLES AND STARTER ROPE

1. LOWER HANDLES (Fig. 1)—Push ends of handle together and install on pivot pins. Bend handle latches slightly toward each other. Control cables must be positioned on insides of lower handle. Move handle and latches backward until handle studs snap into center hole. Push hair pin cotters through holes in pivot pins.

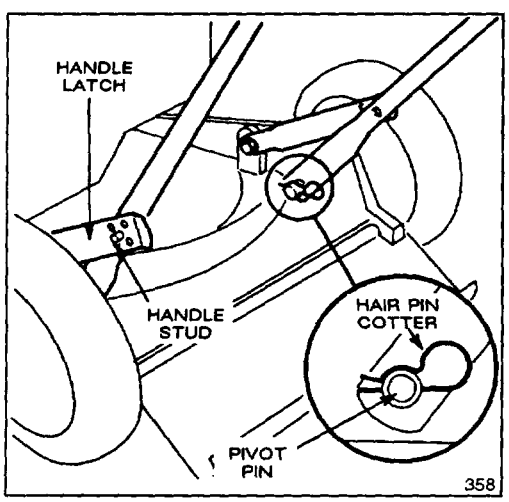

Figure 1

2. UPPER HANDLE (Fig. 2)—Secure upper and lower handles in place with handle knobs and bolts. Control cables must be in back of lower handle cross member. Secure control cables in position with cable ties.

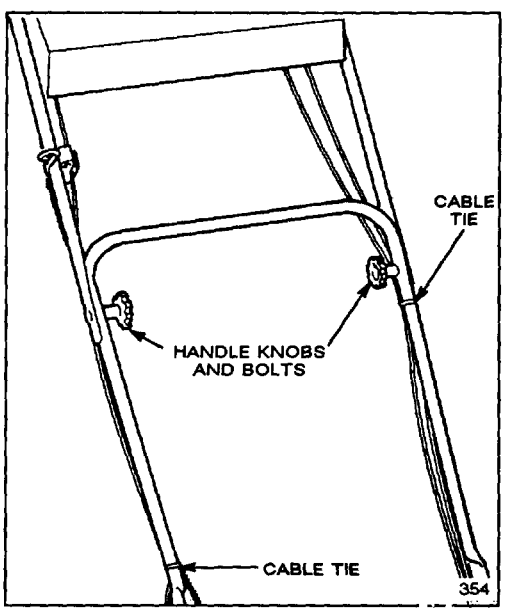

Self-propelled model shown

Figure 2

3. STARTER ROPE (Fig. 3)—Pull starter rope through opening in rope guide. By squeezing control bar (Fig. 6) against handle, blade brake will release and allow rope to be pulled easily up to rope guide.

SET-UP INSTRUCTIONS

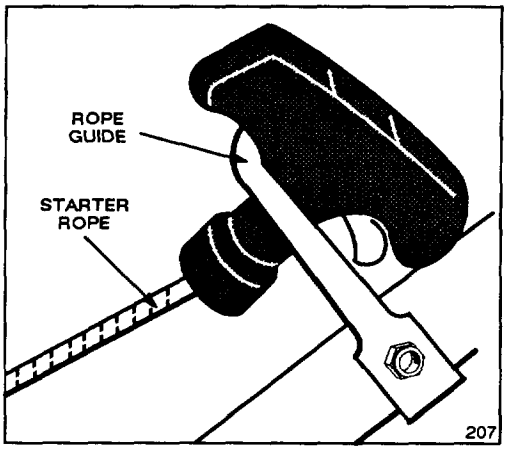

Figure 3

BEFORE OPERATING

FILL CRANKCASE WITH OIL

Initially, crankcase must be filled with 20 ounces (0.592 L) of SAE 30 or 10W30 oil. Use any high quality detergent oil having the American Petroleum Institute (API) "service classification"—SC, SD, SE or SF.

Before each use, ensure oil level is between FULL and ADD marks on dipstick (Fig. 4). Add oil if level is at or below ADD mark.

1. Position mower on level surface and clean around oil dipstick.

2. Remove dipstick by rotating cap counterclockwise.

3. Wipe dipstick and insert it into filler neck. Rotate cap clockwise. Then remove dipstick and check level of oil on side of dipstick with FULL and ADD marks (Fig. 4). If level is low, add only enough oil to raise level to FULL mark on dipstick. **DO NOT FILL ABOVE FULL MARK BECAUSE ENGINE COULD BE DAMAGED WHEN STARTED. POUR OIL SLOWLY.**

4. Insert dipstick into filler neck and rotate cap clockwise to lock.

Note: Check oil level each time mower is used or after every 5 operating hours. Initially, change oil after the first 2 hours of operation; thereafter, change oil after every 25 hours of operation. More frequent oil changes are required in dusty or dirty conditions.

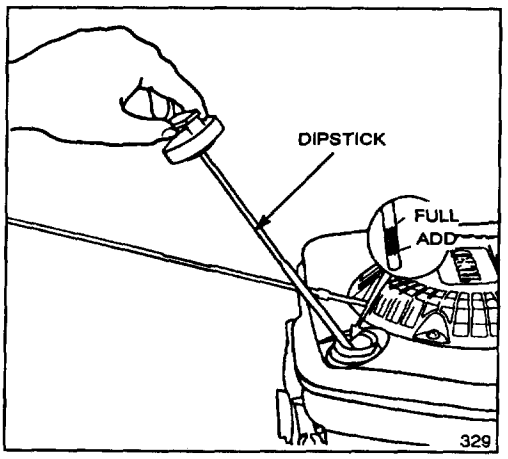

Figure 4

BEFORE OPERATING

⚠ WARNING

DANGER: Gasoline is extremely flammable and explosive under certain conditions. Do not smoke when handling fuel and keep fuel far away from open flames and sparks. Never buy more than a 30 day supply of gasoline. Store it in an approved container. Keep gasoline out of reach of children.

Refuel outdoors and only when engine is cold. Do not fill tank full. Fill tank to within 1/4" to 1/2" (6 to 13 mm) from top of tank, not into filler neck. This space is for expansion of fuel. Use funnel or spout to prevent spilling. Wipe up any spilled gas.

FILL FUEL TANK WITH GASOLINE

Note: The Toro Company strongly recommends the use of fresh, clean, UNLEADED regular grade gasoline in Toro gasoline powered products. Unleaded gasoline burns cleaner, extends engine life, and promotes good starting by reducing the build-up of combustion chamber deposits. Leaded gasoline can be used if unleaded is not available.

Toro also recommends that Toro Stabilizer/Conditioner be used regularly in all Toro gasoline powered products during operation and storage seasons. Toro Stabilizer/Conditioner cleans the engine during operation and prevents gum-like varnish deposits from forming in the engine during periods of storage.

1. Clean around fuel tank cap and remove cap from tank (Fig. 4). Using unleaded gasoline, fill fuel tank to within 1/4" to 1/2" (6 to 13 mm) from top of tank, not into filler neck. Do not fill tank full.
2. Install fuel tank cap and wipe up any spilled gasoline.

IMPORTANT: DO NOT MIX OIL WITH THE GASOLINE. NEVER USE METHANOL, GASOLINE CONTAINING METHANOL, GASOHOL CONTAINING MORE THAN 10% ETHANOL OR WHITE GAS BECAUSE ENGINE FUEL SYSTEM DAMAGE COULD RESULT.

DO NOT USE FUEL ADDITIVES OTHER THAN THOSE MANUFACTURED FOR FUEL STABILIZATION DURING STORAGE SUCH AS TORO'S STABILIZER/CONDITIONER OR A SIMILAR PRODUCT. TORO'S STABILIZER/CONDITIONER IS A PETROLEUM DISTILLATE BASED STABILIZER/CONDITIONER. TORO DOES NOT RECOMMEND STABILIZERS WITH AN ALCOHOL BASE SUCH AS ETHANOL, METHANOL OR ISOPROPYL. STABILIZERS SHOULD NOT BE USED TO TRY TO ENHANCE THE POWER OR PERFORMANCE OF MACHINE.

OPERATING INSTRUCTIONS

OPERATING TIPS

1. CHECK OIL LEVEL—Maintain oil level between "FULL" and "ADD" marks on dipstick.
2. BEFORE OPERATING—Ensure engine, brake, self-propelled drive (self-propelled models only), and control bar function properly. When control bar is released, blade and engine are designed to stop.

OPERATING INSTRUCTIONS

3. CUTTING AND BAGGING—To improve quality of cut, discharge clippings toward previously cut area. Best results are achieved when engine is running at maximum speed and only about 1/3 of the grass blade is cut. If long grass must be cut, use highest height-of-cut setting for first mowing. Then recut the grass at a more normal setting. If too long of grass is cut, mower may plug and cause engine to stall.

4. SHARPEN BLADE—Begin each cutting season with a sharp blade. Periodically file down nicks.

⚠ CAUTION

Never raise side discharge deflector on mower when engine is running because grass clippings and other debris discharges with enough force to cause injury.

The optional grass bag material will catch and contain the majority of foreign objects such as small stones and other similar debris. The bag material, however, is subject to normal wear and deterioration. So check the bag frequently, and if it is defective, install a new genuine TORO replacement bag that has this or similar warning.

STARTING, STOPPING, AND SELF-PROPELLING (model 16404 only)

1. CONTROLS (Figs. 5 & 6)—Wheel drive control (model 16404 only), throttle/choke, control bar, and fingertip starter are on upper handle.

2. Push spark plug wire onto spark plug (Fig. 12). Move wheel drive control to DISENGAGE (self-propelled model only). Move throttle to CHOKE. Hold control bar against handle. Pull fingertip starter (Figs. 5 & 6) out until positive engagement results; then pull vigorously to start the engine. Regulate throttle as desired when engine starts.

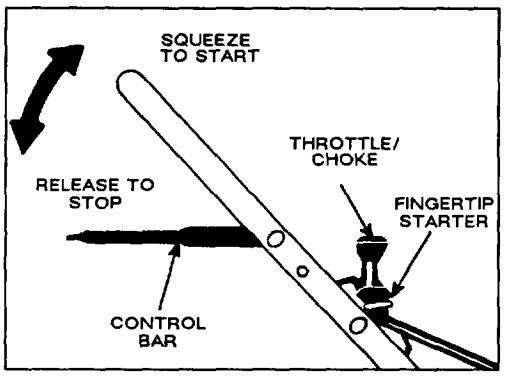

Hand push model 16403

Figure 5

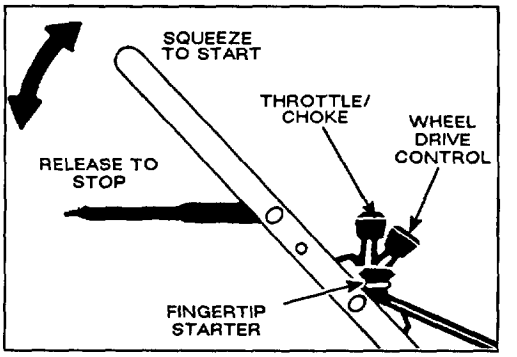

Self-propelled model 16404

Figure 6

3. SELF-PROPELLING—Move wheel drive control to ENGAGE (model 16404). Front wheels will now drive mower. For maneuvering and making turns, push down on handle to raise front wheels slightly off grass. Move control to DISENGAGE to stop front wheel drive.

4. STOPPING—Release control bar to stop engine and blade. On self-propelled model, move wheel drive control to DISENGAGE position. Pull wire off spark plug if mower will be unattended or not used.

OPERATING INSTRUCTIONS

ADJUSTING HEIGHT-OF-CUT

Five notches cast into the housing represent each graduated height-of-cut setting (Fig. 7).

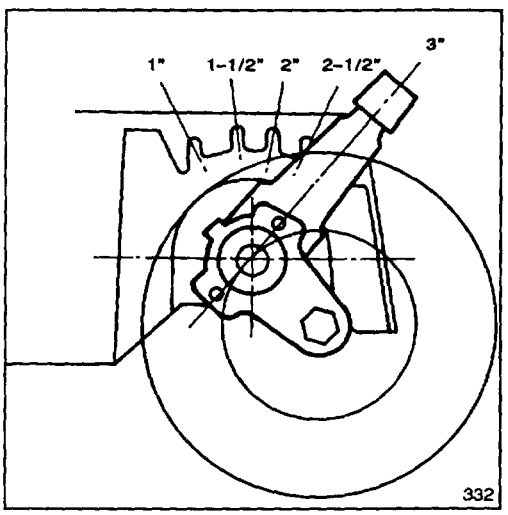

Figure 7

1. Stop the engine and pull the wire off the spark plug (Fig. 12).
2. For easier adjustment, lift housing up so wheel is off ground. **Do not put fingers under housing when lifting.**

Squeeze adjusting lever toward wheel (Fig. 8) and move it to the desired setting. Ensure pin on adjusting lever engages notch in housing. Adjust all wheels to the same height.

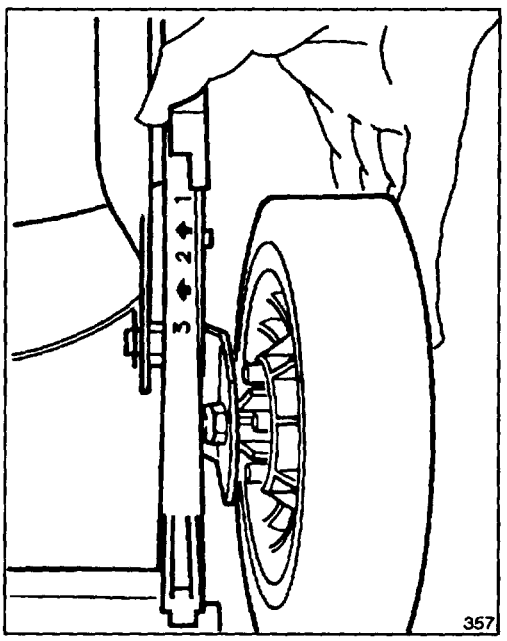

Figure 8

MAINTENANCE

⚠ CAUTION

Pull wire off spark plug before performing adjustments or maintenance.

SERVICING AIR CLEANER

Normally, replace air cleaner after every 25 operating hours. More frequent replacement is required when mower is operated in dusty or dirty conditions.

1. Stop engine and pull wire off spark plug (Fig. 12).
2. Remove screw securing air cleaner cover to engine (Fig. 9). Tilt cover down and clean thoroughly.

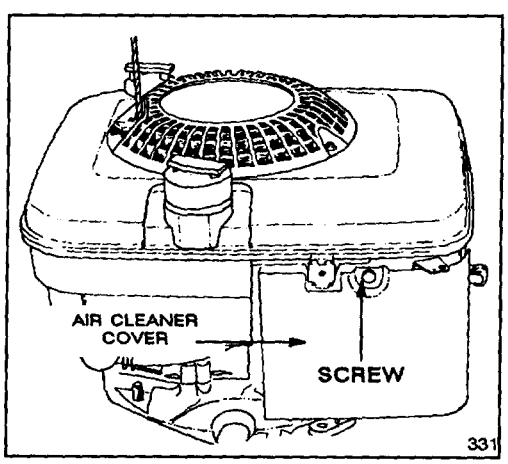

Figure 9

3. Remove paper air cleaner filter (Fig. 10) and discard.

4. Insert new paper air cleaner filter cartridge so lip touches back plate as shown in Figure 10.

5. Close air cleaner cover and secure with screw.

IMPORTANT: Do not operate engine without air cleaner element because extreme engine wear and damage will likely result.

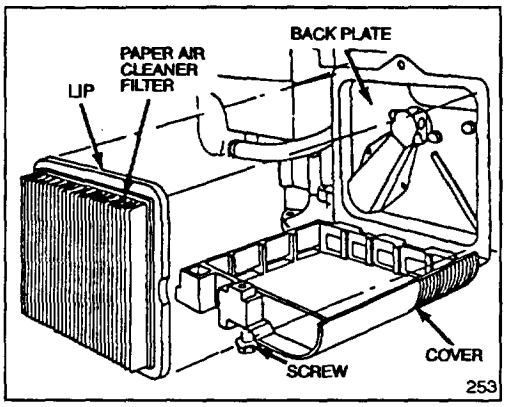

Figure 10

CHANGING CRANKCASE OIL

Change crankcase oil after the first 2 operating hours and after every 25 hours thereafter. Since warm oil drains better and carries more contaminants than cold, run engine for a minute or so before draining oil.

1. Stop engine and pull wire off spark plug (Fig. 12).

2. If necessary, remove grass bag. Drain gasoline from fuel tank: refer to Draining Gasoline, page 9.

3. Tip mower on its left side. Remove drain plug from underside of mower using an adjustable wrench (Fig. 11). Place a drain pan under mower.

4. Lower mower to allow oil to drain into pan.

5. After draining, clean drain plug and reinstall it. Wipe up any spilled oil. Fill engine with fresh oil: refer to Fill Crankcase With Oil, page 4.

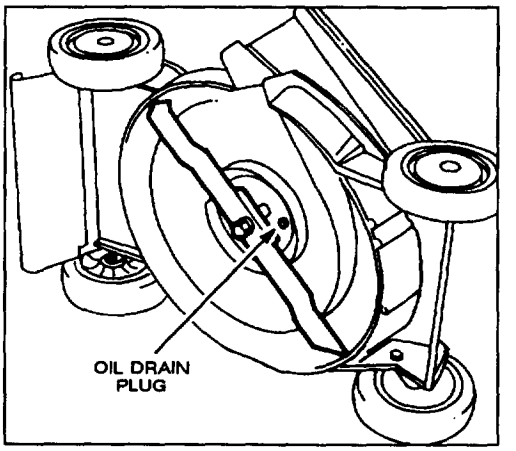

Figure 11

REPLACING SPARK PLUG

Use a Champion RJ19LM spark plug or equivalent. Correct air gap is 0.030" (0.76 mm). Remove plug after every 25 operating hours and check its condition.

1. Stop engine and pull wire off spark plug (Fig. 12).

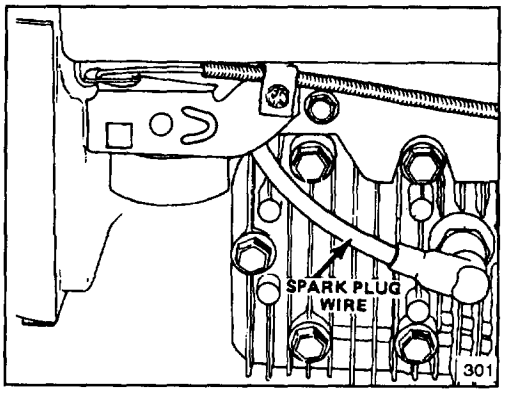

Figure 12

2. Clean around spark plug and remove plug from cylinder head.

IMPORTANT: Replace a cracked, fouled, or dirty spark plug. Do not sand blast, scrape, or clean electrodes because engine damage could result from grit entering cylinder.

3. Set air gap at 0.030" (0.76 mm) (Fig. 11). Install correctly gapped spark plug and gasket seal. Tighten plug firmly to 15 ft-lb (20 N·m).

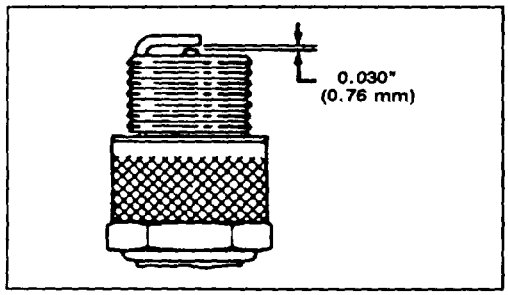

Figure 13

CLEANING MOWER HOUSING

To ensure best performance, keep underside of mower housing and grass deflector clean.

1. Stop engine and pull wire off spark plug (Fig. 12).
2. Drain gasoline from fuel tank: refer to Draining Gasoline, page 9.
3. Tip mower on its left side (Fig. 14). Avoid rotating blade because starting problems may result.

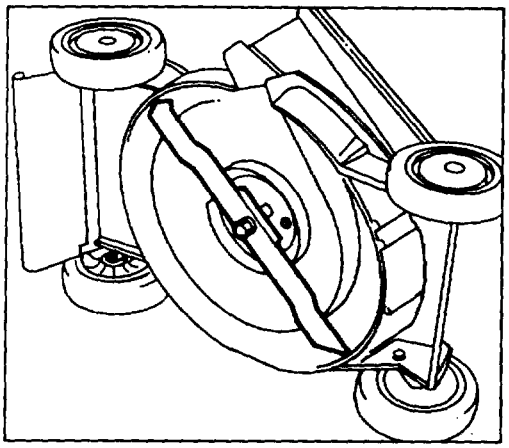

Figure 14

4. Remove dirt and grass clippings that stick to housing with hardwood scraper. Avoid burrs and sharp edges.

DRAINING GASOLINE

1. Stop engine and pull wire off spark plug (Fig. 12).
2. Remove cap from fuel tank and use pump-type syphon to drain fuel into clean gas can.

Note: This is the only procedure recommended for draining fuel.

INSPECTING/REMOVING/SHARPENING BLADE

1. Stop engine and pull wire off spark plug (Fig. 12).
2. Drain gasoline from fuel tank; refer to Draining Gasoline, page 9.
3. Tip mower on its left side (Fig. 15).

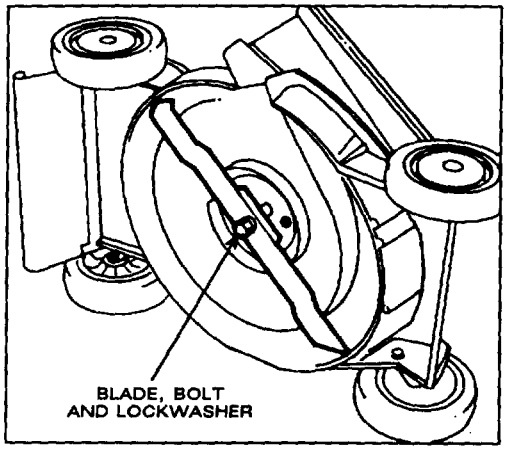

Figure 15

4. INSPECTING BLADE—Carefully examine blade for sharpness and wear, especially where flat and curved parts meet (Fig. 16A). Since sand and abrasive material can wear away the metal that connects the flat and curved parts of the blade, check blade before using the mower. If a slot or wear is noticed, (Fig. 16B & C), replace blade. Refer to step 5.

MAINTENANCE

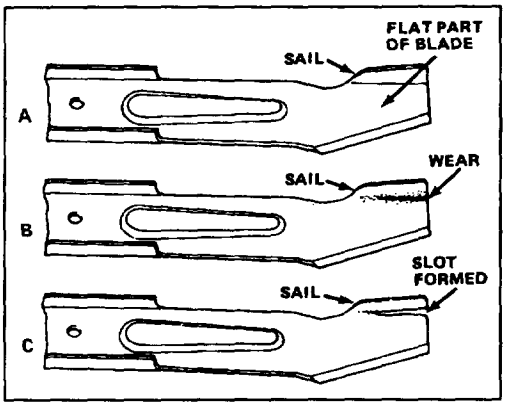

Figure 16

Note: For best performance, install new blade before cutting season begins. During the year, file down small nicks to maintain the cutting edge.

WARNING

If blade is allowed to wear, a slot may form near the sail. Eventually a piece of blade may break off resulting in serious injury to yourself or a bystander.

5. REMOVING BLADE—Grasp end of blade using a rag or thickly padded glove. Remove blade bolt, lockwasher, and blade (Fig. 15).

6. SHARPENING BLADE—Using a file, sharpen top side of blade and maintain original cutting angle (Fig. 17). The blade will remain balanced if same amount of material is removed from both cutting edges.

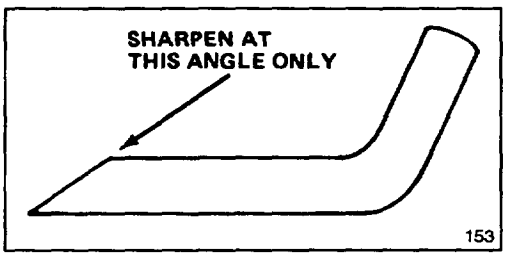

Figure 17

IMPORTANT: Check balance of blade by putting it on a blade balancer. An inexpensive balancer can be purchased at a hardware store. A balanced blade stays in a horizontal position and an unbalanced blade settles to the heavy side. If blade is not balanced, file more metal off cutting edge on heavy end of blade.

7. Install sharp, balanced blade with lockwasher and blade bolt. Sail part of blade must point toward top of mower housing to ensure correct installation. Tighten blade bolt to 50 ft-lb (68 N·m).

LUBRICATION

After every 25 operating hours or when season ends, front and rear wheels must be lubricated.

1. OIL FRONT AND REAR WHEELS—Apply 2 or 3 drops of light oil on inside and outside of wheel bolts. Spin wheels to distribute oil into bushings. Wipe up excess oil.

2. GREASE FRONT AXLE PIVOTS (Fig. 18) (model 16404 only)—Adjust height-of-cut to 3-inch setting and loosen wheel bolt to get additional clearance around grease fitting. Wipe grease fittings with clean rag. Install grease gun onto fitting and gently apply 2 or 3 pumps of #2 Multi-Purpose Lithium Base Grease. Excess pressure may damage seals.

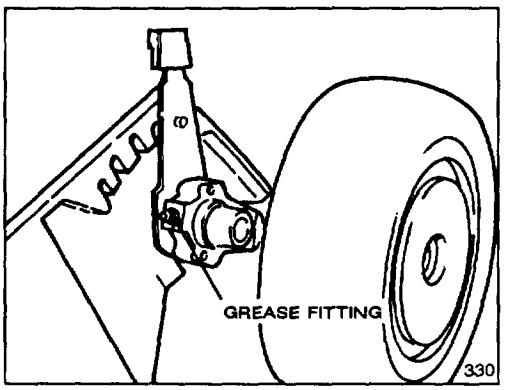

Figure 18

MAINTENANCE

CHECKING TRANSMISSION OIL LEVEL

The transmission is filled with E.P. 90 gear oil that has a GL-5 or GL-6 rating. Level of gear oil must be checked at least every 25 operating hours, before storage and before the mowing season begins.

1. Stop engine and pull wire off spark plug (Fig. 12).
2. Remove two screws and lift off transmission cover (Fig. 19).

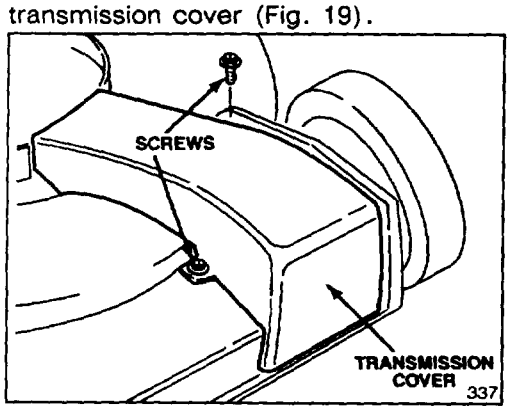

Figure 19

3. CHECKING GEAR OIL LEVEL (Fig. 20)—Position mower on level surface and clean around plastic plug. Remove plastic plug and watch for oil to ooze out of hole. If gear oil oozes out, quickly install plastic plug because oil is at proper level. If oil does not flow, add gear oil: see step 4.

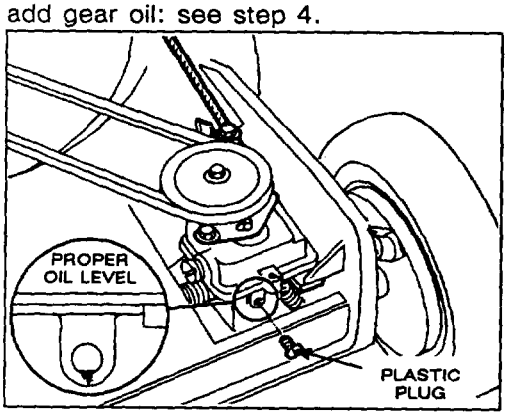

Figure 20

IMPORTANT: Low oil level may indicate a leak where axle goes through both sides of transmission case. Transmission case should be inspected by an Authorized TORO Service Dealer.

4. ADDING GEAR OIL—Slowly add E.P. 90 gear oil that has a GL-5 or GL-6 rating. Stop when oil oozes out of hole in gear case, and quickly install plastic plug. DO NOT OVERTIGHTEN PLASTIC PLUG BECAUSE THREADS MAY STRIP.

Note: A clean Plews type oil container or any other clean container with a small tip can be used to add oil. Using a dirty oil container could contaminate transmission case and eventually cause damage.

5. Reinstall transmission cover.

ADJUSTING WHEEL DRIVE CONTROL (self-propelled model only)

If front wheels do not engage and disengage or if a new wheel drive control cable is installed, an adjustment is required.

1. Stop engine and pull wire off spark plug (Fig. 12).
2. Remove transmission cover (Fig. 19).
3. ADJUSTMENT (Fig. 21)—Loosen belt guide screw until cable conduit slides. Move handle-mounted wheel drive control to DISENGAGE position. Move shift arm toward clamp screw and hold in place. Pull cable conduit to remove slack and tighten belt guide screw.

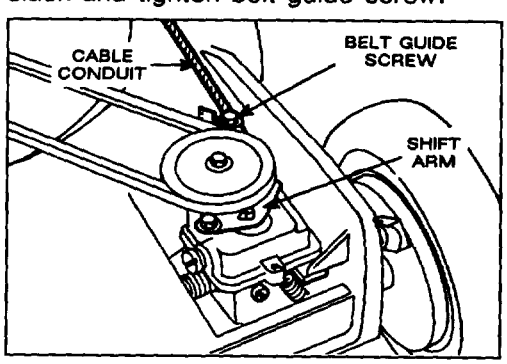

Figure 21

4. Reinstall transmission cover.

MAINTENANCE

ADJUSTING BLADE BRAKE

Whenever a new blade brake cable assembly is installed, an adjustment is required.

1. Stop engine and pull wire off spark plug (Fig. 12).
2. CHECK ADJUSTMENT (Fig. 22)—Move control bar toward handle until slack in wire is removed. Gap between brake lever and handle must be 1/8"–3/16". See step 3 for adjustment.

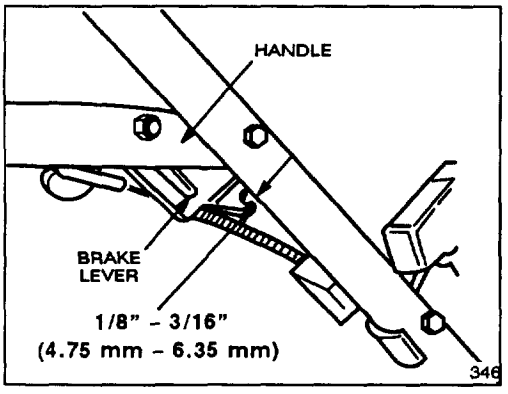

Figure 22

3. ADJUST CABLE CONDUIT—Loosen locknut on cable support (Fig. 23). Insert 1/8"–3/16" object between brake lever and handle. Pull down on cable conduit until slack is removed. Then tighten locknut.

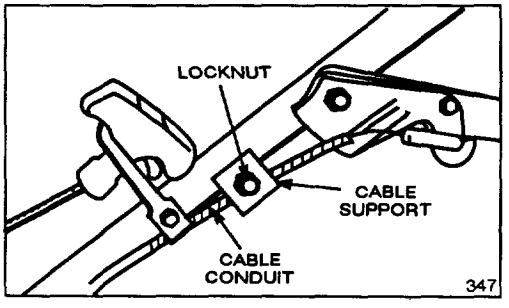

Figure 23

PREPARING MOWER FOR STORAGE

1. For long term storage, either drain gasoline from fuel tank or use a fuel additive before storing. To drain gasoline, refer to Draining Gasoline, page 9. After fuel is drained, start engine and let it idle until all fuel is consumed and engine stops. Repeat the starting procedure two more times to ensure all gas is removed from the engine. If gasoline is not drained, gum-like varnish deposits will form and cause poor engine operation, even starting problems.

Fuel can be left in gas tank only if a fuel additive, such as Toro's Stabilizer/Conditioner, is added to gasoline before storing. Toro's Stabilizer/Conditioner is a petroleum distillate based conditioner/stabilizer. Toro does not recommend stabilizers with an alcohol base, such as ethanol, methanol or isopropyl. Use fuel additive in recommended quantities as specified on container.

Under normal conditions, fuel additives remain effective in fuel for 6–8 months.

2. Drain oil: refer to Changing Crankcase Oil, page 8. After oil is drained, do not fill crankcase with oil until the following steps (3-11) are completed.
3. Remove spark plug and pour 2 tablespoons of SAE 10W30 oil into hole in cylinder. Pull starter rope slowly to coat inside of cylinder. Reinstall spark plug and tighten to 15 ft–lb (20 N·m). **DO NOT INSTALL WIRE ON SPARK PLUG.**
4. Clean underside of housing: refer to Cleaning Mower Housing, page 9.
5. Check condition of blade: refer to Inspecting/Removing/Sharpening Blade, page 9.
6. Tighten all nuts, bolts, and screws.
7. Clean dirt and chaff from cylinder, cylinder head fins, and blower housing. Also remove grass clippings, dirt, and grime from external parts of the engine, shrouding, and top of mower housing.
8. Clean air cleaner: refer to Servicing Air Cleaner, page 7.

MAINTENANCE

9. Lubricate the wheels: refer to Lubrication, page 10.

10. Check transmission oil level: refer to Checking Transmission Oil Level, page 11.

11. Touch up all rusted or chipped paint surfaces. Toro Re-Kote paint is available from an Authorized TORO Service Dealer.

12. Fill crankcase with oil; refer to Fill Crankcase With Oil, page 4.

13. Store mower in a clean, dry place, out of the reach of children. Cover mower to keep it clean and protected.

OPTIONAL EQUIPMENT

For special conditions, the following accessories may be purchased at your local Authorized Toro Service Dealer.

1. Side Discharge Bagging Kit, Model No. 47-6510—Side bag kit (Fig. 24) lets you bag lush grass in spring to help keep your lawn free of clippings. In the fall, bag leaves while you mow to eliminate the hand-blistering raking job.

2. Spark Arrestor, Briggs & Stratton Part No. 398067—If a spark arrestor is required because of local, state, or federal regulations, it may be purchased at your local Authorized Toro Service Dealer. If mower is operated on any California forest, brush, or grass covered land without a properly operating spark arrestor, the operator is violating state law, Section 4442 Public Resources Code.

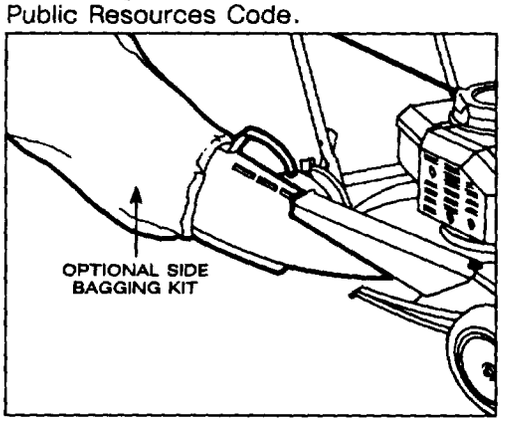

Figure 24

PRODUCT IDENTIFICATION

A model and a serial number decal is located at rear of mower housing. Always refer to specific numbers on this decal in correspondence or when replacement parts are needed.

TORO SERVICE SUPPORT

If help - concerning safety, set-up, operation, maintenance, or troubleshooting - is ever needed, contact the local Authorized TORO Service Dealer or Distributor. Refer to the "Yellow Pages" for assistance. In addition to skilled service technicians, the dealer and distributor have factory approved accessories and replacement parts. Keep your Toro all TORO. Buy genuine TORO replacement parts and accessories.

MAINTENANCE RECORD

Date	Hours Used						