Form No. 3384-914 Rev B

TORO®

Count on it.

Operator's Manual

Workman® MD and MDX Utility Vehicle

Model No. 07266TC—Serial No. 314000001 and Up
Model No. 07273—Serial No. 314000001 and Up
Model No. 07273TC—Serial No. 314000001 and Up
Model No. 07279—Serial No. 314000001 and Up

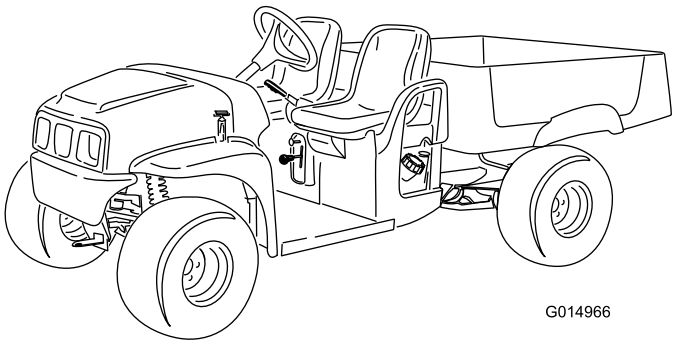

G014966

Register at www.Toro.com.
Original Instructions (EN)

CE

3384-914 B

This product complies with all relevant European directives. For details, please see the separate product specific Declaration of Conformity (DOC) sheet.

⚠ WARNING

CALIFORNIA
Proposition 65 Warning

This product contains a chemical or chemicals known to the State of California to cause cancer, birth defects, or reproductive harm.

The engine exhaust from this product contains chemicals known to the State of California to cause cancer, birth defects, or other reproductive harm.

Important: This engine is not equipped with a spark arrester muffler. It is a violation of California Public Resource Code Section 4442 to use or operate the engine on any forest-covered, brush-covered, or grass-covered land. Other states or federal areas may have similar laws.

This spark ignition system complies with Canadian ICES-002.

The enclosed *Engine Owner's Manual* is supplied for information regarding the US Environmental Protection Agency (EPA) and the California Emission Control Regulation of emission systems, maintenance, and warranty. Replacements may be ordered through the engine manufacturer.

Introduction

This machine is a utility vehicle that intended to be used by professional, hired operators in commercial applications. It is primarily designed for the transport of implements used in such applications. This machine allows for the safe transport of an operator and one passenger in the identified seats. The cargo box of this machine is not suitable for any riders.

Read this information carefully to learn how to operate and maintain your product properly and to avoid injury and product damage. You are responsible for operating the product properly and safely.

You may contact Toro directly at www.Toro.com for product and accessory information, help finding a dealer, or to register your product.

Whenever you need service, genuine Toro parts, or additional information, contact an Authorized Service Dealer or Toro Customer Service and have the model and serial numbers of your product ready. Figure 1 identifies the location of the model and serial numbers on the product. Write the numbers in the space provided.

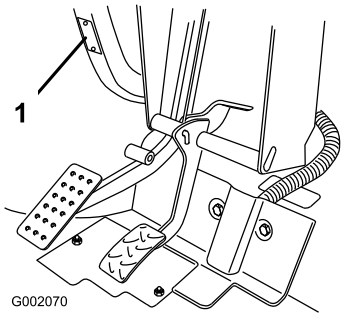

Figure 1

1. Model and serial number location

Model No. _____

Serial No. _____

This manual identifies potential hazards and has safety messages identified by the safety alert symbol (Figure 2), which signals a hazard that may cause serious injury or death if you do not follow the recommended precautions.



Figure 2

1. Safety alert symbol

This manual uses 2 words to highlight information. **Important** calls attention to special mechanical information and **Note** emphasizes general information worthy of special attention.

© 2014—The Toro® Company
8111 Lyndale Avenue South
Bloomington, MN 55420

Contact us at www.Toro.com.
Printed in the USA
All Rights Reserved

Contents

Introduction 2
Safety 4
Safe Operating Practices 4
Before Operating 4
Operation 4
Maintenance 6
Models 07266TC and 07279 7
Models 07273 and 07273TC 7
Safety and Instructional Decals 8
Setup 10
1 Installing the Steering Wheel (Models 07266TC and 07273TC) 10
2 Reading the Manual and Viewing the Safety Training Material 10
Product Overview 12
Controls 12
Specifications 15
Attachments/Accessories 15
Operation 16
Think Safety First 16
Operating the Cargo Box 16
Preforming Pre-Starting Checks 17
Checking the Engine Oil 18
Checking the Brake-fluid Level 19
Checking the Tire Pressure 20
Adding Fuel 20
Starting the Engine 21
Stopping the Machine 21
Parking the Machine 21
Breaking in a New Machine 21
Loading the Cargo Box 22
Transporting the Machine 23
Towing the Machine 23
Towing a Trailer 23
Maintenance 24
Recommended Maintenance Schedule(s) 24
Daily Maintenance Checklist 25
Premaintenance Procedures 26
Maintaining the Machine under Special Operating Conditions 26
Preparing to Maintain the Machine 26
Jacking up the Machine 26
Opening and Closing the Hood 26
Lubrication 27
Greasing the Machine 27
Engine Maintenance 27
Servicing the Air Cleaner 27
Servicing the Engine Oil 28
Servicing the Spark Plug 30
Fuel System Maintenance 31
Inspecting Fuel Lines and Connections 31
Replacing the Fuel Filter 31
Servicing the Carbon Canister 31
Electrical System Maintenance 32
Maintaining the Battery 32
Replacing the Fuses 33
Maintaining the Headlights 33
Drive System Maintenance 35
Maintaining the Tires 35
Adjusting Front Wheel Toe-in and Camber 35
Checking the Transmission-oil Level 36
Changing the Transaxle Fluid 37
Checking and Adjusting Neutral 37
Maintaining the Primary-drive Clutch 38
Cooling System Maintenance 39
Cleaning the Engine Cooling Areas 39
Brake Maintenance 39
Inspecting the Brakes 39
Adjusting the Parking Brake 39
Belt Maintenance 40
Servicing the Drive Belt 40
Adjusting the Starter-Generator Belt 40
Chassis Maintenance 41
Adjusting the Cargo-box Latches 41
Cleaning 41
Washing the Machine 41
Storage 42

Safety

Improper use or maintenance by the operator or owner can result in injury. To reduce the potential for injury, comply with these safety instructions and always pay attention to the safety alert symbol, which means **Caution**, **Warning**, or **Danger**—"personal safety instruction." Failure to comply with the instruction may result in personal injury or death.

Safe Operating Practices

⚠ WARNING

The machine is an off-highway vehicle only and is not designed, equipped, or manufactured for use on public roads. Using it on a public road may result in an accident, which could seriously injure or kill you or others.

Do not use this machine on public roads.

Supervisor's Responsibilities

- Make sure that operators of this machine are thoroughly trained and familiar with the *Operator's Manual* and all labels on the machine.
- Be sure to establish your own special procedures and work rules for unusual operating conditions (e.g. slopes too steep for machine operation).

Before Operating

- Operate the machine only after reading and understanding the contents of this manual.
- Never allow children to operate the machine. Anyone who operates the machine should have a motor vehicle license.
- Never allow other adults to operate the machine without first reading and understanding the *Operator's Manual*. Only trained and authorized persons should operate this machine. Make sure that all operators are physically and mentally capable of operating the machine.
- This machine is designed to carry only you, the operator, and one passenger in the seat provided by the manufacturer. Never carry any other passengers on the machine.
- Never operate the machine when under the influence of drugs or alcohol. Even prescription drugs and cold medicines can cause drowsiness.
- Do not drive the machine when you are tired. Be sure to take occasional breaks. It is very important that you stay alert at all times.
- Become familiar with the controls and know how to stop the engine quickly.
- Keep all shields, safety devices, and decals in place. If a shield, safety device, or decal is malfunctioning, illegible, or damaged, repair or replace it before operating the machine.
- Always wear substantial shoes. Do not operate the machine while wearing sandals, tennis shoes or sneakers. Do not wear loose fitting clothing or jewelry which could get caught in moving parts and cause personal injury.
- Wearing safety glasses, safety shoes, long pants and a helmet is advisable and required by some local safety and insurance regulations.
- Avoid driving when it is dark, especially in unfamiliar areas. If you must drive when it is dark, be sure to drive cautiously, use the headlights, and even consider adding additional lights.
- Be extremely careful when operating around people. Always be aware of where bystanders might be.
- Before operating the machine, always check the designated areas of the machine that are stated in the Preforming Pre-Starting Checks (page 17). If something is wrong, do not use the machine. Make sure that the problem is corrected before the machine or attachment is operated.
- Since gasoline is highly flammable, handle it carefully.
  - Use an approved gasoline container.
  - Do not remove the cap from the fuel tank when the engine is hot or running.
  - Do not smoke while handling gasoline.
  - Fill the fuel tank outdoors, and fill it to about 25 mm (1 inch) below the top of the tank (the bottom of the filler neck). Do not overfill it.
  - Wipe up any spilled gasoline.

Operation

⚠ WARNING

Engine exhaust contains carbon monoxide, which is an odorless, deadly poison that can kill you.

Do not run engine indoors or in an enclosed area.

- The operator and passenger should remain seated whenever the machine is in motion. The operator should keep both hands on the steering wheel whenever possible, and the passenger should use the hand holds provided. Keep your arms and legs within the machine body at all times.
- Drive slower and turn less sharply when you are carrying a passenger. Remember your passenger may not be expecting you to brake or turn, and may not be ready.
- Always watch out for and avoid low overhangs such as tree limbs, door jambs, and overhead walkways. Make sure there is enough room over head to easily clear the machine and your head.
- Failure to operate the machine safely may result in an accident, tipping over of the machine, and serious injury

or death. Drive carefully. To prevent tipping or loss of control:

- Use extreme caution, reduce speed, and maintain a safe distance around sand traps, ditches, creeks, ramps, unfamiliar areas, or any areas that have abrupt changes in ground conditions or elevation.
- Watch for holes or other hidden hazards.
- Use extra caution when operating the machine on wet surfaces, in adverse weather conditions, at higher speeds, or with a full load. Stopping time and distance will increase with a full load.
- Avoid sudden stops and starts. Do not change the direction of the machine from reverse to forward or forward to reverse without first coming to a complete stop.
- Slow down before turning. Do not attempt sharp turns or abrupt maneuvers or other unsafe driving actions that may cause a loss of machine control.
- When dumping a load of material from the cargo box of the machine, do not let anyone stand behind the machine. Ensure that the cargo box is down and latched before releasing the tailgate.
- Only operate the machine when the cargo box is down and latched.
- Before backing up, look to the rear of the machine and ensure that no one is behind you. Back the machine up slowly.
- Watch out for traffic when you are near or crossing roads. Always yield the right of way to pedestrians and other roadway vehicles. Always signal your turns or stop early enough so that other people know what you plan to do. Obey all traffic rules and regulations.
- The electrical and exhaust systems of the machine can produce sparks capable of igniting explosive materials. Never operate the machine in or near an area where there is dust or fumes in the air which are explosive.
- If you are ever unsure about safe operation, stop operating the machine and ask your supervisor for instructions.

- Do not touch the engine or muffler while the engine is running or soon after it has stopped. These areas may be hot enough to cause burns.
- If the machine ever vibrates abnormally, stop immediately, wait for all motion to stop, and inspect the machine for damage. Repair all damage to the machine before continuing to operation it.
- Before getting off of the seat:
  1. Stop the movement of the machine.
  2. Set the parking brake.
  3. Turn the ignition key to the Off position.
  4. Remove the ignition key.

  Note: If the machine is on an incline, block the wheels after getting off of the machine.
- Lightning can cause severe injury or death. If lightning is seen or thunder is heard in the area, do not operate the machine; seek shelter.

Braking

- Slow down before you approach an obstacle. This gives you extra time to stop or turn away. Hitting an obstacle can injure you and your passenger. In addition, it can damage the machine and its contents.
- Gross machine Weight (GVW) has a major impact on your ability to stop and/or turn. Heavy loads and attachments make the machine harder to stop or turn. The heavier the load, the longer it takes to stop.
- Decrease the speed of the machine if the cargo box has been removed and there is no attachment installed on the machine. The braking characteristics change and fast stops may cause the rear wheels to lock up, which will affect the control of the machine.
- Turf and pavement are much more slippery when they are wet. It can take 2 to 4 times longer to stop the machine on wet surfaces as on dry surfaces. If you drive through deep-standing water and get the brakes wet, they will not work well until they are dry. After driving through water, you should test the brakes to make sure they work properly. If they do not, drive slowly on a level ground while putting light pressure on the brake pedal. This will dry the brakes out.

Operating on Hills

⚠ WARNING

Operating the machine on a hill may cause tipping or rolling of the machine, or the engine may stall and you could lose headway on the hill. This could result in personal injury.

- **Do not operate machine on excessively steep slopes.**
- **Do not accelerate quickly or slam on the brakes when backing down a hill, especially with a load.**
- **If the engine stalls or you lose headway on a hill, slowly back straight down the hill. Never attempt to turn the machine around.**
- **Operate the machine slowly on a hill and use caution.**
- **Avoid turning on a hill.**
- **Reduce your load and the speed of the machine.**
- **Avoid stopping on hills, especially with a load.**

These extra cautions need to be taken when operating the machine on a hill:

- Slow the machine down before starting up or down a hill.

- If the engine stalls or you begin to lose momentum while climbing a hill, gradually apply the brakes and slowly back the machine straight down the hill.
- Turning while traveling up or down hills can be dangerous. If you have to turn while on a hill, do it slowly and cautiously. Never make sharp or fast turns.
- Heavy loads affect stability. Reduce the weight of the load and your ground speed when operating on hills or if the load has a high center of gravity. Secure the load to the cargo box of the machine to prevent the load from shifting. Take extra care when hauling loads that shift easily (liquid, rock, sand, etc.).
- Avoid stopping on hills, especially with a load. Stopping while going down a hill will take longer than stopping on level ground. If the machine must be stopped, avoid sudden speed changes, which may initiate tipping or rolling of the machine. Do not slam on the brakes when rolling backward, as this may cause the machine to overturn.
- If you will be using the machine on hilly terrain, you can install the optional ROPS Kit.

Operating on Rough Terrain

Reduce the ground speed of the machine and load carried in the machine when operating on rough terrain, uneven ground, and near curbs, holes, and other sudden changes in terrain. Loads may shift, causing the machine to become unstable.

If you will be using the machine on rough terrain, you can install the optional ROPS Kit.

⚠ WARNING

Sudden changes in terrain may cause abrupt steering wheel movement, possibly resulting in hand and arm injuries.

- **Reduce your speed when operating on rough terrain and near curbs.**
- **Grip the steering wheel loosely around the perimeter keeping thumbs up and out of the way of the steering wheel spokes.**

Loading and Dumping

The weight and position of cargo and passenger can affect the stability and handling of the machine. Be aware of following condition to avoid losing control of the machine or tipping it over:

- Do not exceed the rated weight capacity of the machine when operating it with a load in the cargo box, when towing a trailer, or both; refer to Specifications (page 15).
- Use caution when operating the machine on a hillside or on rough terrain, particularly with a load in the cargo box or when towing a trailer or both.
- Use caution when carrying tall loads in the cargo box.
- Be aware that the stability and control of the machine are reduced when the load in the cargo box is poorly distributed.
- Carrying oversized loads in the cargo box changes the stability of the machine.
- The steering, braking , and stability of the machine are affected when carrying a load where the weight of the material cannot be bound to the machine such as the liquid in a large tank.

⚠ WARNING

The weight of the box may be heavy. Hands or other body parts could be crushed.

- **Keep hands and other body parts clear when lowering the box.**
- **Do not dump materials on bystanders.**

- Never dump a loaded cargo box while the machine is sideways on a hill. The change in weight distribution may cause the machine to overturn.
- When operating with a heavy load in the cargo box, reduce your speed and allow for sufficient braking distance. Do not suddenly apply the brakes. Use extra caution on slopes.
- Be aware that heavy loads increase your stopping distance and reduce your ability to turn quickly without tipping over.
- The rear cargo space is intended for load carrying purposes only, not for passengers.
- Never overload your machine. The name plate (located under the middle of the dash) shows the load limits for the machine. Never overfill attachments or exceed the machine maximum gross machine weight (GVW); refer to Loading the Cargo Box (page 22).

Maintenance

- Allow only qualified and authorized personnel to maintain, repair, adjust, or inspect the machine.
- Before servicing or making adjustments to the machine, stop the engine, set the parking brake, and remove the key from the ignition.
- To make sure that the entire machine is in good condition, keep all nuts, bolts, and screws properly tightened.
- To reduce the potential for fire, keep the engine area free of excessive grease, grass, leaves, and accumulation of dirt.
- Never use an open flame to check the level or leakage of fuel or battery electrolyte.
- If the engine must be running to perform a maintenance adjustment, keep your hands, feet, clothing, and any parts of your body away from the engine and any moving parts.

Keep everyone away form the machine while maintenance is performed on a running machine.

- Do not use open pans of fuel or flammable cleaning fluids for cleaning parts.
- If major repairs to the machine are needed or assistance is required, contact an Authorized Toro Distributor.
- To ensure the optimum performance and safety of your machine, always purchase genuine Toro replacement parts and accessories. Replacement parts and accessories made by other manufacturers could be dangerous. Altering this machine in any manner that may affect machine's operation, performance, durability, or its use, may result in injury or death. Such use could void the product warranty.

Models 07266TC and 07279

Sound Pressure

This unit has a guaranteed sound power level of 96 dBA, which includes an Uncertainty Value (K) of 1 dBA.

Sound power level was determined according to the procedures outlined in EN ISO 11094.

Sound Pressure

This unit has a sound pressure level at the operator's ear of 83 dBA, which includes an Uncertainty Value (K) of 1 dBA.

Sound pressure level was determined according to the procedures outlined in EN ISO 11201.

Hand-Arm Vibration

Measured vibration level for right hand = 1.5 m/s^2

Measured vibration level for left hand = 1.03 m/s^2

Uncertainty Value (K) = 0.5 m/s^2

Measured values were determined according to the procedures outlined in EN 1032.

Whole Body Vibration

Measured vibration level = 0.42 m/s^2

Uncertainty Value (K) = 0.5 m/s^2

Measured values were determined according to the procedures outlined in EN 1032.

Models 07273 and 07273TC

Sound Pressure

This unit has a guaranteed sound power level of 96 dBA, which includes an Uncertainty Value (K) of 1 dBA.

Sound power level was determined according to the procedures outlined in EN ISO 11094.

Sound Pressure

This unit has a sound pressure level at the operator's ear of 86 dBA, which includes an Uncertainty Value (K) of 1 dBA.

Sound pressure level was determined according to the procedures outlined in EN ISO 11201.

Hand-Arm Vibration

Measured vibration level for right hand = 1.5 m/s^2

Measured vibration level for left hand = 1.06 m/s^2

Uncertainty Value (K) = 0.5 m/s^2

Measured values were determined according to the procedures outlined in EN 1032.

Whole Body Vibration

Measured vibration level = 0.35 m/s^2

Uncertainty Value (K) = 0.5 m/s^2

Measured values were determined according to the procedures outlined in EN 1032.

Safety and Instructional Decals

Safety decals and instructions are easily visible to the operator and are located near any area of potential danger. Replace any decal that is damaged or lost.

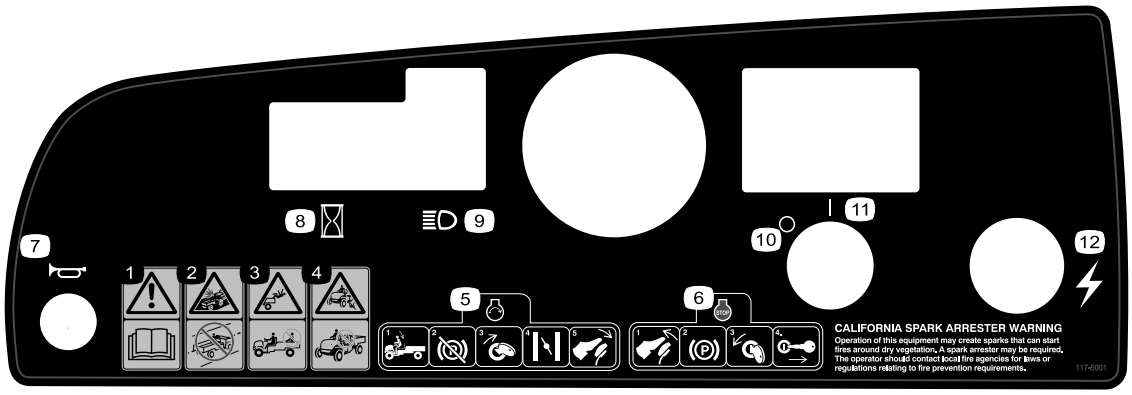

117-5001

1. Warning—read the *Operator's Manual*.
2. Collision hazard—do not operate the vehicle on public streets, roads, or highways.
3. Falling hazard—do not carry passengers in the cargo bed.
4. Falling hazard—do not allow children to operate the vehicle.
5. To start the motor, sit on the operator's seat, release the parking brake, turn the power key on, pull the choke lever out (if needed), and press the accelerator pedal.
6. To stop the engine, release the accelerator pedal, set the parking brake, turn the power key off, and remove the power key.
7. Horn
8. Hour meter
9. Headlights
10. Power—Off
11. Power—On
12. Electrical power (power point)



104-6581

1. Warning—read the *Operator's Manual*.
2. Fire hazard—before fueling, stop the engine.
3. Warning—do not operate this machine unless you are trained.
4. Tipping hazard—use caution and drive slowly while on slopes; drive slowly when turning, keep the vehicle speed under 26 km/h (16 mph) when carrying a full or heavy load and when driving on rough terrain.
5. Falling and arm/leg injury hazards—do not carry passengers in the cargo bed and keep arms and legs inside of the vehicle at all times.

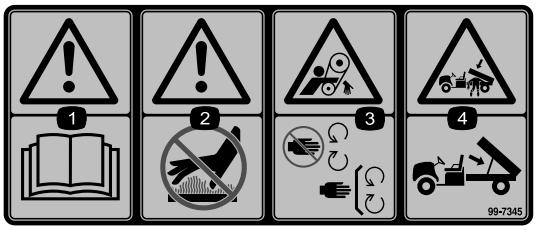

99-7345

1. Warning—read the *Operator's Manual*.
2. Hot surface/burn hazard—stay a safe distance from the hot surface.
3. Entanglement hazard, belt—stay away from moving parts; keep all guards in place.
4. Crushing hazard, cargo box—use the prop rod to support the cargo bed

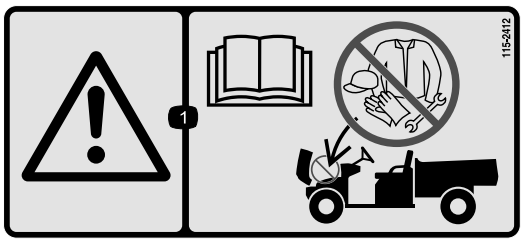

115-2412

1. Warning—read the *Operator's Manual*; no storage.

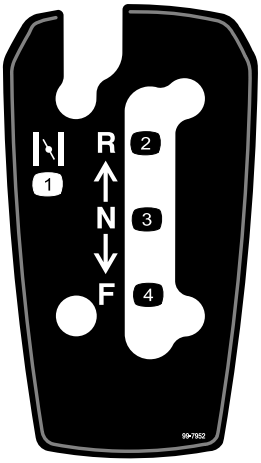

99-7952

1. Choke
2. Reverse
3. Neutral
4. Forward

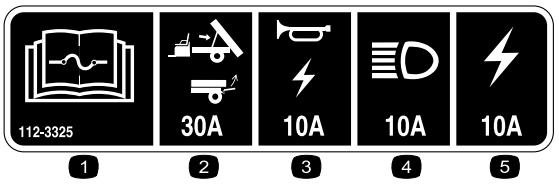

112-3325

1. Read the *Operator's Manual* for fuse information.
2. Lift/gate, 30A
3. Horn/power point, 10A
4. Headlights, 15A
5. Machine fuse, 20A

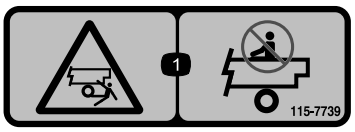

115-7739

1. Falling, crushing hazard, bystanders—no riders on machine.

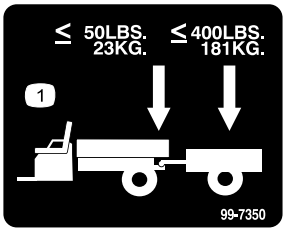

99-7350

1. Maximum tongue weight is 50 lb (23 kg); maximum trailer weight is 400 lb (181 kg).

Setup

Loose Parts

Use the chart below to verify that all parts have been shipped.

Procedure	Description	Qty.	Use
1	Steering wheel	1	Install the steering wheel (Models 07266TC and 07273TC).
2	Operator's Manual Engine Owner's Manual Parts Catalog Safety Training material Registration Card Predelivery Inspection Form Certificate of Quality Key	1 1 1 1 1 1 1 2	Read the Operator's Manual and view the training material before operating the machine.

Note: Determine the left and right sides of the machine from the normal operating position.

1

Installing the Steering Wheel (Models 07266TC and 07273TC)

Parts needed for this procedure:

1	Steering wheel

Procedure

1. Release the tabs on the back of the steering wheel that hold the center cover in place, and remove the cover from the hub of the steering wheel.
2. Remove the locknut and washer from the steering shaft.
3. Slide the steering wheel and washer onto the shaft. Align the steering wheel on the shaft so that the cross beam is horizontal when the tires are pointed straight ahead and the thicker spoke of the steering wheel is downward.

   Note: The dust cover is position onto the steering shaft at the factory.
4. Secure the steering wheel to the shaft with the locknut (Figure 3).

   Note: Torque the locknut to 24-29 N-m (18-22 ft-lb).

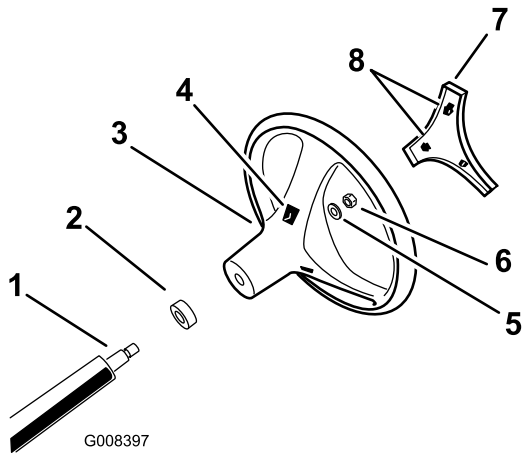

Figure 3

1. Steering shaft
2. Dust cover
3. Steering wheel
4. Tab slots in wheel
5. Washer
6. Locknut
7. Cover
8. Tabs in cover

Align the tabs of the cover with the slots in the steering wheel, and snap the cover onto the steering-wheel hub.

2

Reading the Manual and Viewing the Safety Training Material

Parts needed for this procedure:

1	*Operator's Manual*
1	*Engine Owner's Manual*
1	*Parts Catalog*
1	Safety Training material
1	Registration Card
1	*Predelivery Inspection Form*
1	Certificate of Quality
2	Key

Procedure

- Read the *Operator's Manual* and *Engine Operator's Manual*.
- View the safety training material.
- Fill out the registration card.
- Complete the *Predelivery Inspection Form*.
- Review the *Certificate of Quality*.

Product Overview

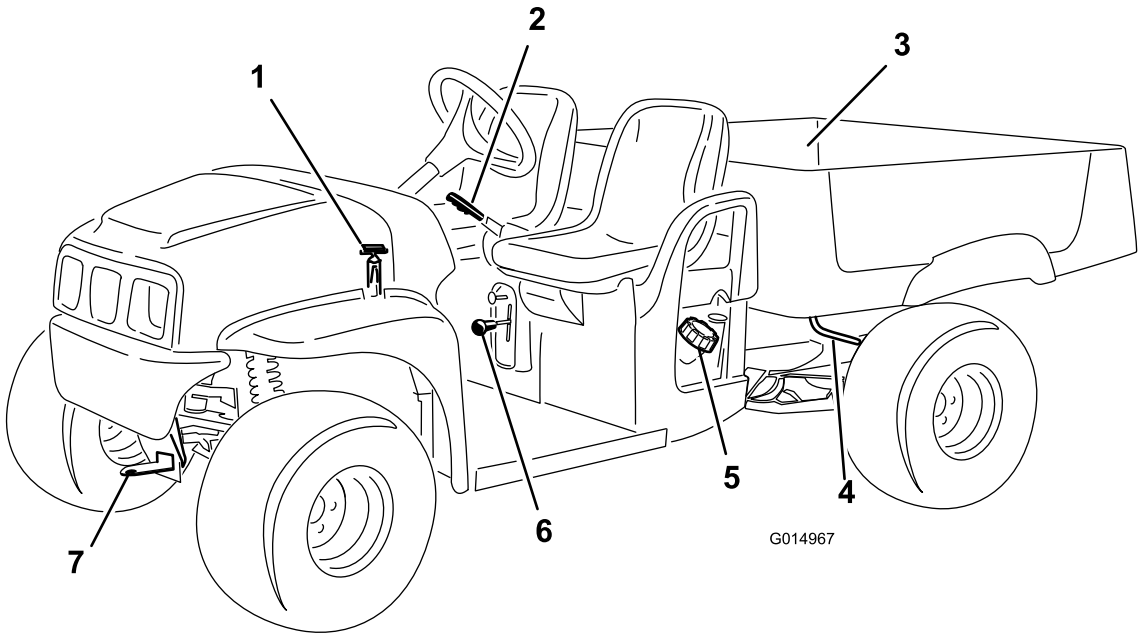

Figure 4

1. Hood latch
2. Parking-brake lever
3. Cargo box
4. Cargo-box lever
5. Fuel cap
6. Gear shift selector
7. Towing tongue

Controls

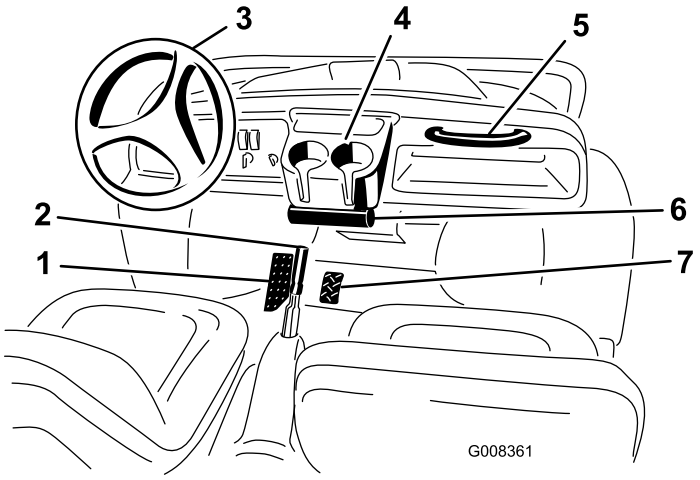

Figure 5

1. Brake pedal
2. Parking brake (between the seats)
3. Steering wheel
4. Cup holder
5. Passenger hand hold
6. *Operator's Manual* tube
7. Accelerator pedal

Accelerator Pedal

Use the accelerator pedal (Figure 5) to vary ground speed of the machine. Pressing down the accelerator pedal starts the engine. Pressing the pedal farther increases ground speed. Releasing the pedal will slow the machine, and the engine will stop running.

Note: The maximum forward speed is 26 km/h (16 mph).

Brake Pedal

Use the brake pedal is used to slow or stop the machine (Figure 5).

⚠ CAUTION

Brakes can become worn or can be incorrectly adjusted resulting in personal injury. If brake pedal travels to within 25 mm (1 inch) of the floor board of the machine, the brakes must be adjusted or repaired.

Replace worn brakes. Repair the brakes if they are incorrectly adjusted.

Parking Brake

The parking brake is located between the seats (Figure 5). Use the parking brake whenever the engine is shut off to prevent accidental movement of the machine. If the machine is parked on a steep grade, make sure that the parking brake is applied.

- To set the parking brake, pull up on the parking-brake lever.
- To release the parking brake, push down on the parking-brake lever.

Choke Control

The choke control is located below and to the right of the operator's seat. Use the choke to help start a cold engine by pulling the choke control outward (Figure 6). After the engine starts, regulate the choke to keep the engine running smoothly. As the engine warms up, push the control in to the Off position.

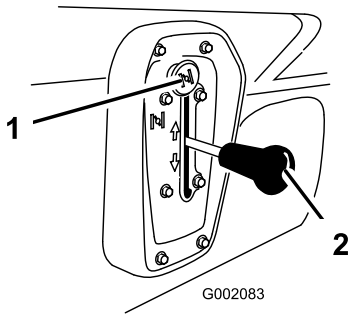

Figure 6

1. Choke
2. Gear-shift selector

Gear-shift Selector

Use the gear-shift selector to change the direction of travel of the machine. The gear-shift selector has three positions: forward, reverse, and neutral (Figure 6). The engine will start and run in any of the three positions.

Note: When equipped with the optional backup alarm, if the gear-shift selector is moved to the Reverse position when the ignition is turned on, a buzzer will sound to warn the operator that the machine is in reverse gear.

Important: Always stop the machine before changing gears.

Ignition Switch

The ignition switch (Figure 7), is used to run and stop the engine, and has two positions: On and Off. Rotate the key clockwise to the On position to allow the engine to operate. When the machine is stopped, rotate the key counterclockwise to the Off position to shut off the engine. Remove the key from the ignition when leaving the machine.

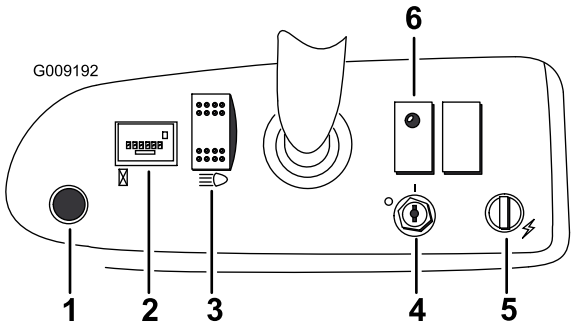

Figure 7

1. Horn Button (Models 07266TC and 07273TC)
2. Hour meter
3. Light switch
4. Ignition switch
5. Power Point
6. Oil light

Hour Meter

The hour meter (Figure 7) indicates the total number of hours the engine has run. The hour meter records time whenever the engine is running and the accelerator pedal is pressed down.

Oil Light

The oil light is used to warn the operator that the oil pressure of the running engine has dropped below a safe level (Figure 7). If the oil light illuminates and remains lit, the oil level in the engine should be checked, and if necessary oil added; refer to Checking the Engine Oil (page 18).

Note: The oil light may flicker, this is normal and no action needs to be taken.

Light Switch

The light switch is used to control the headlights. Push the light switch down to turn on the headlights; push the switch up to shut off the lights (Figure 7).

Power Point

Use the power point to provide 12 volt DC power for optional electrical accessories (Figure 7).

Horn Button (Models 07266TC and 07273TC)

Press the horn button to sound the horn (Figure 7).

Fuel Gauge

The fuel gauge (Figure 8) is located on the fuel tank next to the filler cap, at the left side of the machine. The gauge displays the amount of fuel in the tank.

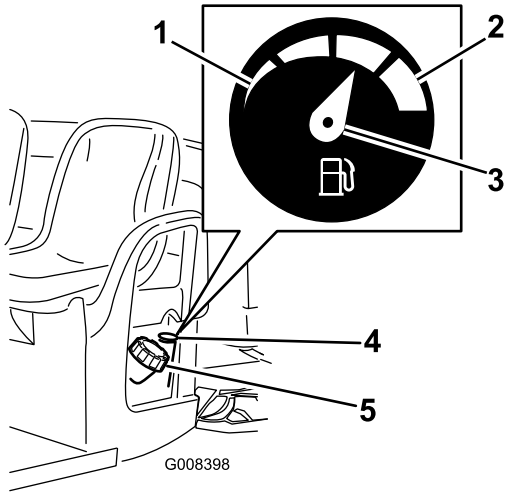

Figure 8

1. Empty
2. Full
3. Needle
4. Fuel gauge
5. Fuel-tank cap

Passenger Hand Holds

The passenger hand holds are located on the right side of the dash panel and at the outside of each seat (Figure 9).

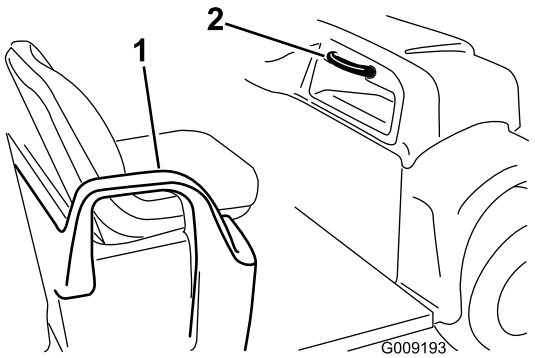

Figure 9

1. Hand hold—hip restraint
2. Passenger hand hold

Specifications

Note: Specifications and design are subject to change without notice.

Type	Model: 07266TC and 07279	Model: 07273 and 07273TC
Base weight	Dry 544 kg (1200 lb)	
Rated capacity (on level ground)	567 kg (1250 lb) total, including 90.7 kg (200 lb) operator and 90.7 kg (200 lb) passenger, load, trailer tongue weight, gross trailer weight, accessories, and attachments	749 kg (1650 lb) total, including 90.7 kg (200 lb) operator and 90.7 kg (200 lb) passenger, load, trailer tongue weight, gross trailer weight, accessories, and attachments
Maximum gross vehicle weight (GVW) (on level ground)	1111 kg (2450 lb) total, including all of the weights listed above	1292 kg (2850 lb) total, including all of the weights listed above
Maximum cargo capacity (on level ground)	385 kg (850 lb) total, including trailer tongue weight and gross trailer weight	567 kg (1250 lb) total, including trailer tongue weight and gross trailer weight
Tow capacity: Standard Hitch Heavy Duty Hitch	 Tongue weight 23 kg (50 lb) Maximum trailer weight 182 kg (400 lb) Tongue weight 45 kg (100 lb) Maximum trailer weight 363 kg (800 lb)	
Overall width	150 cm (59 inch)	
Overall length	299 cm (117.75 inch)	
Ground clearance	25 cm (10 inch) at the front with no load or operator, 18 cm (7 inch) at the rear with no load or operator	
Wheel base	206 cm (81 inch)	
Wheel tread (center line to center line)	125 cm (49 inch) in the front, 118 cm (46-1/2 inch) in the rear	125 cm (49 inch) in the front, 120 cm (47-1/4 inch) in the rear
Cargo box length	117 cm (46 inch) inside, 133 cm (52-1/4 inch) outside	
Cargo box width	125 cm (49 inch) inside, 150 cm (59 inch) at outside of the molded fenders	
Cargo box height	25 cm (10 inch) inside	

Attachments/Accessories

A selection of Toro approved attachments and accessories is available for use with the machine to enhance and expand its capabilities. Contact your Authorized Service Dealer or Distributor or go to www.Toro.com for a list of all approved attachments and accessories.

Operation

Note: Determine the left and right sides of the machine from the normal operating position.

Think Safety First

Please carefully read all of the safety instructions and decals in the safety section. Knowing this information could help you or bystanders avoid injury.

Operating the Cargo Box

Raising the Cargo Box

⚠ WARNING

Driving the machine with the cargo box raised may cause the machine to tip or roll easier. The box structure may become damaged if you operate the machine with the box raised.

- **Only operate the machine when the cargo box is down.**
- **After emptying the cargo box, lower it.**

⚠ CAUTION

If a load is concentrated near the back of the cargo box when you release the latches, the box may unexpectedly tip open injuring you or bystanders.

- **Center loads in the cargo box if possible.**
- **Hold the cargo box down and ensure that no one is leaning over the box or standing behind it when releasing the latches.**
- **Remove all cargo from the box before lifting the box up to service the machine.**

1. Lift the latch lever that is at the either side near the forward corner of the cargo box, and lift the box up (Figure 10).
2. Secure the cargo box by pulling the prop rod into the rear detent at end of the slot that is in the left frame of the machine (Figure 10).

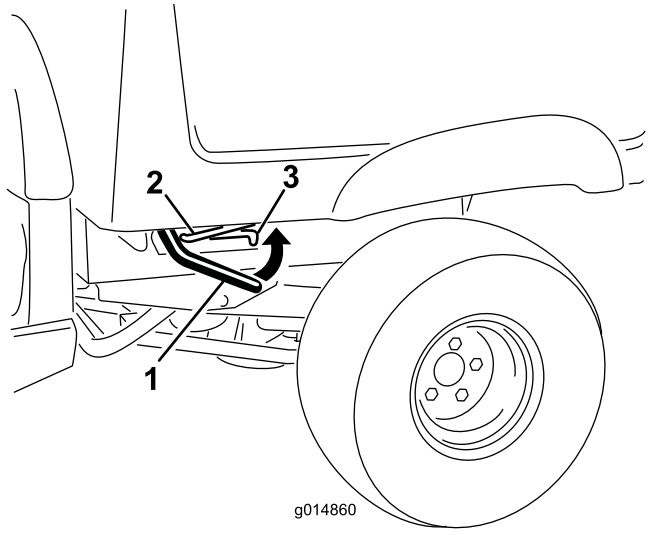

Figure 10

1. Latch lever
2. Prop rod
3. Detent slot

Lowering the Cargo Box

⚠ WARNING

The weight of the box may be heavy. Hands or other body parts could be crushed.

Keep hands and other body parts clear when lowering the box.

1. Raise the cargo box slightly by lifting up on the latch lever (Figure 10).
2. Pull the prop rod out of the detent slot (Figure 10).
3. Lower the box until it latches into securely (Figure 10).

Opening the Tailgate

1. Ensure that the cargo box is down and latched.
2. Lift up on the finger pulls at the back panel of the tail gate (Figure 11).

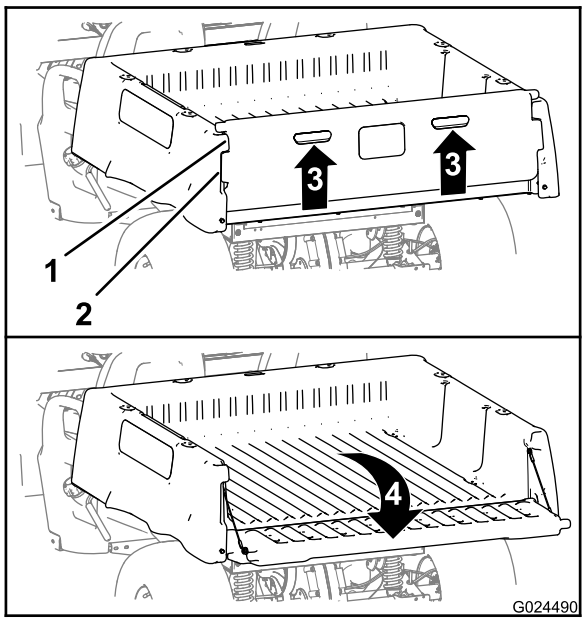

Figure 11

1. Tailgate flange (cargo box)
2. Lock flange (tailgate)
3. Lift up (finger pull)
4. Rotate rearward and down

3. Align the lock flanges of the tailgate with the openings between the tailgate flanges of the cargo box (Figure 11).
4. Rotate the tail gate rearward and down (Figure 11).

Closing the Tailgate

If you unloaded loose material such as sand, landscaping rock, or wood chips from the cargo box of the machine, some the material that you unloaded may have lodged in the hinge area of the tailgate. Perform the following before closing the tailgate.

1. Use your hands to remove as much of the material from the hinge area as possible.
2. Rotate the tailgate to approximately 45° position (Figure 12).

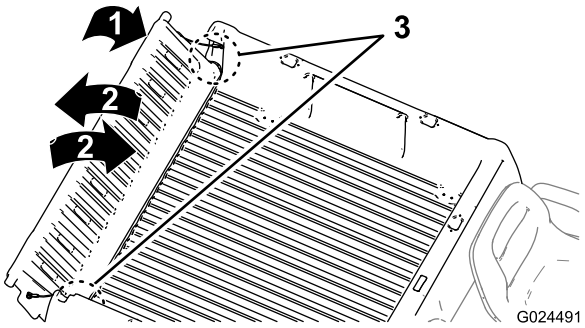

Figure 12

3. Using a short, shaking motion to rotate the tailgate back and forth several times (Figure 12).

   Note: This action will help move material away from the hinge area
4. Lower the tailgate and check the hinge areas for remaining material that is in the hinge area.
5. Repeat steps 1 through 4 until the material is removed from the hinge area.
6. Rotate the tailgate up and forward until the lock flanges of the tailgate are flush with the tailgate pocket in the cargo box (Figure 11).

   Note: Raise or lower the tailgate in order to align the lock flanges of the tailgate with the vertical openings between the tailgate flanges of the cargo box.
7. Lower the tailgate until it is seated in the back of the cargo box (Figure 11).

   Note: The lock flanges of the tailgate will be fully secured by the tailgate flanges of the cargo box.

Preforming Pre-Starting Checks

Check the following items each time you begin using the machine for the day:

- Check engine oil and brake fluid levels, and add the appropriate amount of specified fluids if any are found to be low; refer to Checking the Engine Oil (page 18) and Checking the Brake-fluid Level (page 19).
- Check the tire pressure; refer to Checking the Tire Pressure (page 20).
- Check the brake pedal operation.
- Ensure that the lights work.
- Turn the steering wheel to the left and right to check steering response.
- Check for oil leaks, loose parts, and any other noticeable malfunctions.

  Note: Shut off the engine and allow all moving parts to stop before checking for oil leaks, loose parts, and other malfunctions.

If any of the above items are not correct, notify your mechanic or check with your supervisor before taking the machine out for the day. Your supervisor may want you to check other items on a daily basis, so ask him or her about additional operator's responsibilities.

Checking the Engine Oil

Service Interval: Before each use or daily Checked the engine oil level before the engine is first started.

Note: The engine is shipped with oil in the crankcase.

- **Models 07266TC and 07279**

  Oil Type: Detergent oil (API service SJ or higher)

  Oil Capacity: 1.1 L (1.2 qt)

  Viscosity: See the following table.

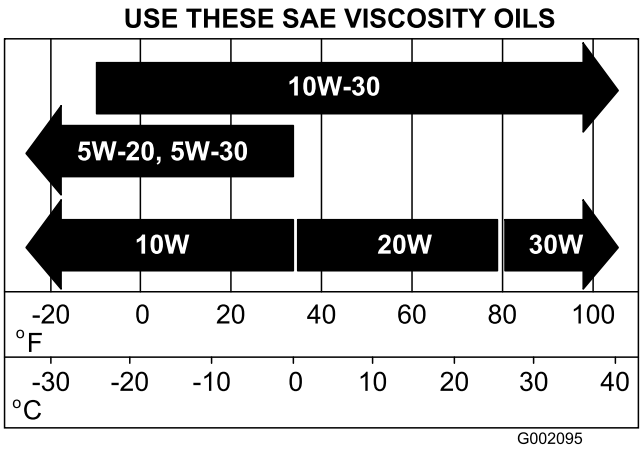

Figure 13

- **Models 07273 and 07273TC**

  Oil Type: Detergent oil (API service SF, SG, SH, SJ, or higher)

  Crankcase Capacity: 1.4 L (1.5 qt) when the filter is changed

  Viscosity: See the table below

  Note: Change the oil and oil filter more frequently when operating conditions are extremely dusty or sandy.

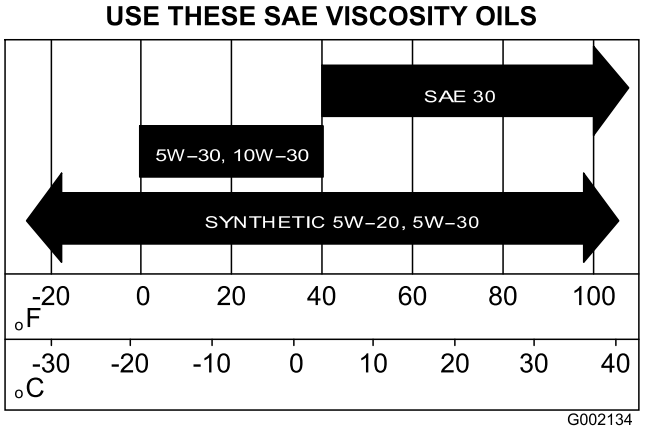

Figure 14

1. Move the machine to a level surface.
2. Raise the cargo box; refer to Raising the Cargo Box (page 16).
3. Use a rag to clean around the following areas of the engine:
   - Models **07266TC and 07279**—the oil dipstick and fill spout (Figure 15).

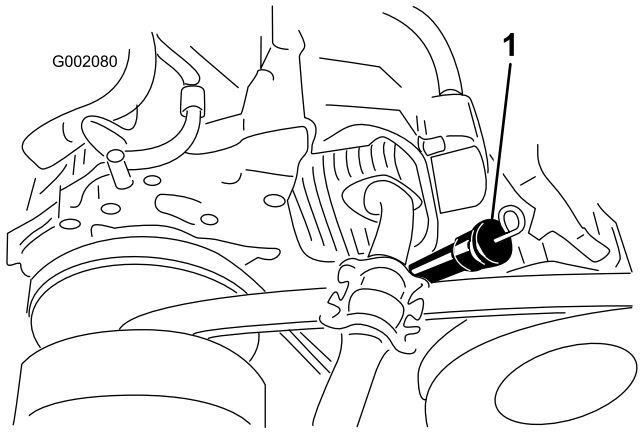

Figure 15
Models 07266TC and 07279

1. Oil dipstick and fill spout

- Models **07273 and 07273TC**—the oil dipstick and fill cap (Figure 16).

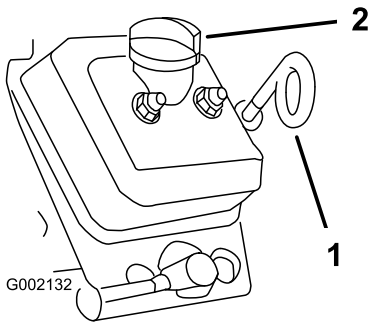

Figure 16
Models 07273 and 07273TC

1. Oil dipstick (loop down) 2. Fill cap

4. Remove the oil dipstick and wipe the end clean (Figure 15 and Figure 16).
5. Slide the oil dipstick into the filler tube fully seating it (Figure 15 and Figure 16). Pull the dipstick out and look at the end.

   Note: If the oil level is low, remove the filler cap and add the specified oil to raise the level up to Full mark on the dipstick.

   Note: Add the oil slowly and check the oil level often during this process. **Do not overfill the engine with oil**.
6. Install the oil dipstick and firmly seat it (Figure 15 and Figure 16).

   Important: Make sure the loop end of the oil dipstick is pointing down on models 07273 and 07273TC.

Checking the Brake-fluid Level

Service Interval: Before each use or daily Check the brake-fluid level before the engine is first started.

Brake Fluid Type: DOT 3

1. Park the machine on a level surface, set the parking brake, turn the ignition off, and remove the key.
2. Remove the rubber plug in the center and on top of the dash to gain access to the master brake cylinder and reservoir (Figure 17).

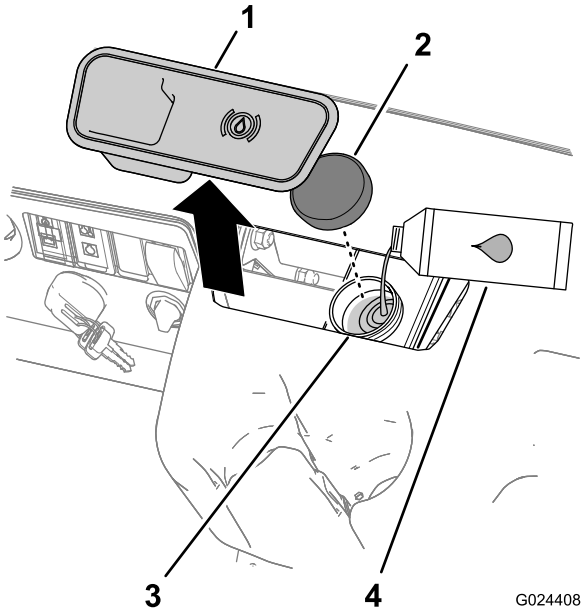

Figure 17

1. Rubber plug
2. Reservoir cap
3. Filler neck (reservoir)
4. DOT 3 brake fluid

3. Look at the outline of the fluid level at the side of the reservoir. (Figure 18).

   Note: The level should be above the Minimum line

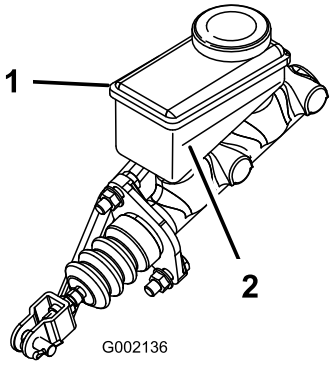

Figure 18

1. Brake-fluid reservoir 2. Minimum line

4. If the fluid level is low, preform the following:
   A. Clean the area around the reservoir cap, and remove the cap (Figure 17).
   B. Add DOT 3 brake fluid to the reservoir until the fluid level is above the Minimum line (Figure 18).

      Note: Do not overfill the reservoir with brake fluid.
   C. Install the reservoir cap (Figure 17).
5. Install the rubber plug in top of the dash (Figure 18).

Checking the Tire Pressure

Service Interval: Before each use or daily

- The air pressure range in the front and rear tires is **55–103 kPa (8–22 psi)**.
- The air pressure needed in the tires is determined by the payload that you intend to carry.
  - Use lower air pressure in the tires for lighter payloads, for less the soil compaction, for a smoother the ride, and to minimize tire marks in the ground.
  - Use higher air pressure in the tires for carrying heavier payloads at higher speeds.
- Do not exceed the maximum air pressure indicated on the sidewall of the tire.

Adding Fuel

- For best results, use only clean, fresh (less than 30 days old), unleaded gasoline with an octane rating of 87 or higher ((R+M)/2 rating method).
- **Ethanol**: Gasoline with up to 10% ethanol (gasohol) or 15% MTBE (methyl tertiary butyl ether) by volume is acceptable. Ethanol and MTBE are not the same. Gasoline with 15% ethanol (E15) by volume is not approved for use. **Never use gasoline that contains more than 10% ethanol by volume**, such as E15 (contains 15% ethanol), E20 (contains 20% ethanol), or E85 (contains up to 85% ethanol). Using unapproved gasoline may cause performance problems and/or engine damage which may not be covered under warranty.
- **Do not** use gasoline containing methanol.
- **Do not** store fuel either in the fuel tank or fuel containers over the winter unless a fuel stabilizer is used.
- **Do not** add oil to gasoline.

⚠ DANGER

In certain conditions, gasoline is extremely flammable and highly explosive. A fire or explosion from gasoline can burn you and others and can damage property.

- **Fill the fuel tank outdoors, in an open area, when the engine is cold. Wipe up any gasoline that spills.**
- **Never fill the fuel tank inside an enclosed trailer.**
- **Do not fill the fuel tank completely full. Add gasoline to the fuel tank until the level is 6 to 13 mm (1/4 to 1/2 inch) below the bottom of the filler neck. This empty space in the tank allows gasoline to expand.**
- **Never smoke when handling gasoline, and stay away from an open flame or where gasoline fumes may be ignited by a spark.**
- **Store gasoline in an approved container and keep it out of the reach of children. Never buy more than a 30-day supply of gasoline.**
- **Do not operate without entire exhaust system in place and in proper working condition.**

⚠ DANGER

In certain conditions during fueling, static electricity can be released causing a spark which can ignite the gasoline vapors. A fire or explosion from gasoline can burn you and others and can damage property.

- **Always place gasoline containers on the ground away from your machine before filling.**
- **Do not fill gasoline containers inside the machine or on a truck or trailer bed because interior carpets or plastic truck bed liners may insulate the container and slow the loss of any static charge.**
- **When practical, remove gas-powered equipment from the truck or trailer and refuel the equipment with its wheels on the ground.**
- **If this is not possible, then refuel such equipment on a truck or trailer from a portable container, rather than from a gasoline dispenser nozzle.**
- **If a gasoline dispenser nozzle must be used, keep the nozzle in contact with the rim of the fuel tank or container opening at all times until fueling is complete.**

Filling the Fuel Tank

The fuel tank capacity is approximately 26.5 L (7 US gallons).

1. Shut the engine off and set the parking brake.
2. Clean the area around the fuel-tank cap (Figure 19).

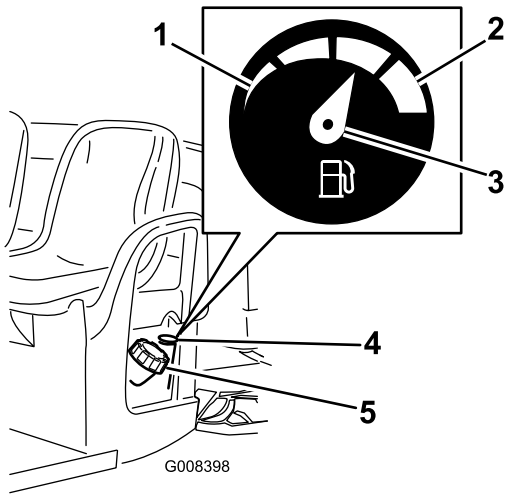

Figure 19

1. Empty
2. Full
3. Needle
4. Fuel gauge
5. Fuel-tank cap

3. Remove the fuel-tank cap.
4. Fill the tank to about 25 mm (1 inch) below the top of tank, (bottom of the filler neck).

   Note: This space in the tank allows gasoline to expand. **Do not overfill**.
5. Install the fuel tank cap securely.
6. Wipe up any fuel that may have spilled.

Starting the Engine

Important: Do not attempt to push or tow the machine to get it started.

1. Sit in the operator seat, insert the key into the ignition switch, and rotate the key clockwise to the On position; refer to Ignition Switch (page 13).

   Note: When equipped with the optional backup alarm, if the gear-shift selector is moved to the Reverse position when the ignition is turned on, a buzzer will sound to warn the operator that the machine is in reverse gear.
2. Move the gear shift selector to the desired direction of travel for the machine; refer to Gear-shift Selector (page 13).
3. Release the parking brake by pushing down on parking-brake lever; refer to Parking Brake (page 12).
4. Slowly step on the accelerator pedal.

   Note: If the engine is cold, press and hold the accelerator pedal about half-way down, and pull the choke knob out to the On position. Return the choke knob to Off after the engine warms up.

Stopping the Machine

To stop the machine, remove your foot from the accelerator pedal and press the brake pedal; refer to Accelerator Pedal (page 12) and Brake Pedal (page 12).

Note: The stopping distance may vary depending on the payload weight on the machine and the ground speed of the machine.

Parking the Machine

1. Press and hold the service brake; refer to Brake Pedal (page 12).
2. Set the parking brake by pulling up the parking-brake lever; refer to Parking Brake (page 12).
3. Rotate the ignition key counterclockwise to the Off position; refer to Ignition Switch (page 13).
4. Remove the ignition key from the ignition switch.

Breaking in a New Machine

Service Interval: After the first 100 hours—Perform the breaking in a new machine guidelines.

Perform the breaking in a new machine guidelines to provide proper performance and long life for the machine.

- Check the fluid and engine oil levels regularly. Remain alert for signs that the machine or its components are overheating.
- After starting a cold engine, let it warm up for about 15 seconds before using the machine.
- Avoid hard braking situations for the first several hours of new machine break-in operation. New brake linings may not be at optimum performance until several hours of use has caused the brakes to become burnished (broken-in).
- Vary the machine speed during operation. Avoid fast starts and quick stops.
- A break-in oil for engine is not required. Original engine oil is the same type specified for regular oil changes.
- Refer to the Maintenance (page 6) for any special low hour checks.
- Check the front suspension positioning and adjust it if necessary; refer to Adjusting Front Wheel Toe-in and Camber (page 35).

Loading the Cargo Box

Use the following guidelines when loading the cargo box and operating the machine:

- Observe the weight capacity of the machine and limit the weight of the load that you carry in the cargo box as described in Specifications (page 15) and on the gross vehicle weight tag of the machine (Figure 20).

  Note: Note : The load rating is specified for machine operation on a level surface only.

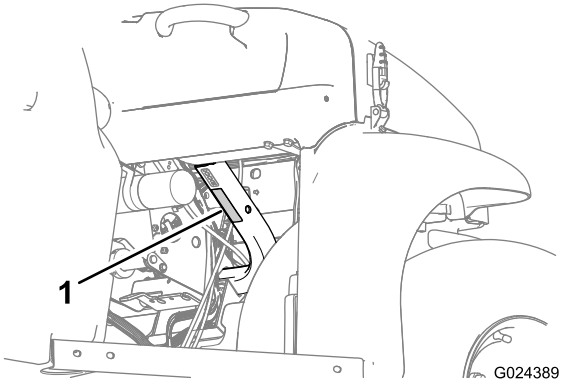

Figure 20

1. Gross machine weight decal

- Reduce the weight of the load that you carry in the cargo box when operating the machine on hills and rough terrain.
- Reduce the weight of the load that you carry when the materials are tall (and have a high center of gravity) such as a stack of bricks, landscaping timbers, or fertilizer bags. Distribute the load as low as possible, making sure that the load does not reduce your ability to see behind the machine when operating it.
- Keep loads centered by loading the cargo box as follows:
  - Evenly position the weight in the cargo box from side to side.

    Important: Tipping over is more likely to occur if the cargo box is loaded to one side.

  - Evenly position the weight in the cargo box from front to back.

    Important: Loss of steering control or the machine may tip over if you position the load behind the rear axle and the traction on the front tires is reduced.

- Use extra caution when transporting oversized loads in the cargo box, particularly when you cannot center the wight of the oversize load to the cargo box
- Whenever possible, secure the load by binding it to the cargo box so it does not shift.
- When transporting liquid in a large tank (such as a sprayer tank), use caution when driving the machine up hill or down hill, when suddenly changing speed or stopping, or when driving over tough surfaces.

The capacity of the cargo box is 0.37 m^3 (13 ft^3). The amount (volume) of material that can be placed in the box without exceeding the load ratings of the machine can vary greatly depending on the density of the material. For example, a level box of wet sand weighs approximately 680 kg (1500 lb), which exceeds the load rating by 113 kg (250 lb). But a level box of wood weighs 295 kg (650 lb), which is under the load rating.

See the table below for load volume limits with various materials:

Material	Density	Maximum Cargo Box Capacity (on level ground)
Gravel, dry	1 521.7 kg/m^3 (95 lb/ft^3)	Full
Gravel, wet	1 922.2 kg/m^3 (120 lb/ft^3)	3/4 full
Sand, dry	1 441.6 kg/m^3 (90 lb/ft^3)	Full
Sand, wet	1 922.2 kg/m^3 (120 lb/ft^3)	3/4 full
Wood	720.8 kg/m^3 (45 lb/ft^3)	Full
Bark	<720.8 kg/m^3 (<45 lb/ft^3)	Full
Earth, packed	1 601.8 kg/m^3 (100 lb/ft^3)	3/4 full (approx.)

Transporting the Machine

Use a trailer to move the machine a long distance. Make sure that the machine is securely bound to the trailer. Refer to Figure 21 and Figure 22 for the location of the tie-down points on the machine.

⚠ CAUTION

Loose seats may fall off of the machine and trailer when transporting the machine, and the seats may land on another machine or obstruct the roadway.

Remove the seats or make sure that the seats are securely fastened to the coupling in the seat shroud.

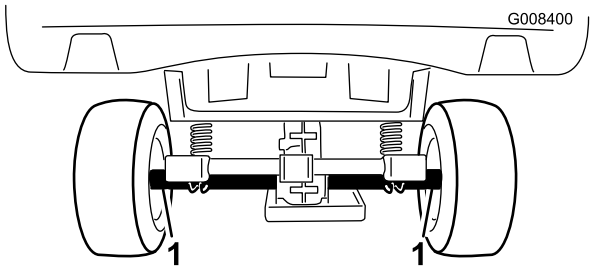

Figure 21

1. Tie-down points (back of the machine)

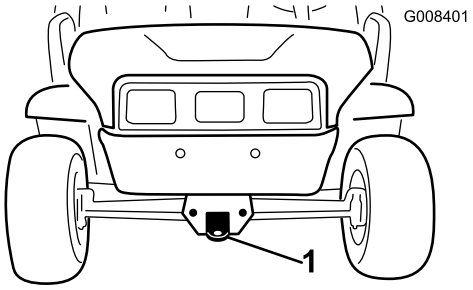

Figure 22

1. Towing tongue and tie down point (front of the machine)

Towing the Machine

In case of an emergency, the machine can be towed for a short distance. However, we do not recommend this as a standard operating procedure.

⚠ WARNING

Towing at excessive speeds could cause a loss of steering control, resulting in personal injury.

Never tow the machine faster than 8 km/h (5 mph).

Towing the machine is a two person job. If the machine must be moved a considerable distance, transport it on a truck or trailer; refer to Transporting the Machine (page 23).

1. Remove the drive belt from the machine; refer to Replacing the Drive Belt (page 40).
2. Affix a tow line to the tongue at the front of the machine's frame (Figure 22).
3. Put the machine in neutral and release the parking brake; refer to Gear-shift Selector (page 13) and Parking Brake (page 12).

Towing a Trailer

The machine is capable of pulling a trailer. Two types of tow hitches are available for the machine, depending on your application. Contact your Authorized Toro Distributor for details.

When hauling cargo or towing a trailer, do not overload your machine or trailer. Overloading either the machine or the trailer can cause poor performance or damage to the brakes, axle, engine, transaxle, steering, suspension, body structure, or tires. Always load a trailer with 60% of the cargo weight in the front of the trailer. This places approximately 10% of the Gross Trailer Weight (GTW) on the tow hitch of the machine.

The maximum cargo load shall not exceed 567 kg (1250 lb), including the GTW. For example, if the GTW = 181.5 kg (400 lb) then the maximum cargo load = 386 kg (850 lb)

To provide adequate braking and traction, always load the cargo box when trailering. Do not exceed the GTW or GVW limits.

Avoid parking a machine with a trailer on a hill. If you must park on a hill, set the parking brake and block the tires of the trailer.

Maintenance

Note: Looking for an *Electrical Schematic* or *Hydraulic Schematic* for your machine? Download a free copy of the schematic by visiting www.Toro.com and searching for your machine from the Manuals link on the home page.

Note: Determine the left and right sides of the machine from the normal operating position.

Recommended Maintenance Schedule(s)

Maintenance Service Interval	Maintenance Procedure
After the first 8 hours	• Check the condition of the drive belt. • Check the tension of the starter-generator belt.
After the first 25 hours	• Change the engine oil. • Change the oil filter (Models 07273 and 07273TC).
After the first 100 hours	• Perform the breaking in a new machine guidelines.
Before each use or daily	• Check the engine oil level. Checked the engine oil level before the engine is first started. • Check the brake-fluid level. • Check the tire pressure. • Check gear-shift operation.
Every 100 hours	• Grease the bearings and bushings. • Inspect and clean the air filter element. Twice as often in special operating conditions; refer to Maintaining the Vehicle under Special Operating Conditions • Change the engine oil. • Change the oil filter (Models 07273 and 07273TC). • Check the spark plug. • Check the condition of the tires and rims. • Torque the wheel-lug nuts. • Check the front wheel toe-in and camber. • Check the transmission-oil level. • Check the operation of the Neutral gear shift position. • Clean the engine cooling areas. • Inspect the brakes.
Every 200 hours	• Replace the air filter. • Adjust the parking brake if needed. • Check the condition and tension of the drive belt. • Check the tension of the starter-generator belt.
Every 400 hours	• Inspect the fuel lines and connections. • Clean the primary-drive clutch.
Every 800 hours	• Replace the fuel filter. • Change the transaxle fluid.
Yearly	• Complete all of the yearly maintenance procedures that are specified in the engine owner's manual.

Important: **Refer to your engine owner's manual for additional maintenance procedures.**

Daily Maintenance Checklist

Duplicate this page for routine use.

Maintenance Check Item	For the week of:						
	Mon.	Tues.	Wed.	Thurs.	Fri.	Sat.	Sun.
Check brake and parking brake operation.							
Check gear shift/neutral operation.							
Check fuel level.							
Check engine oil level.							
Check transaxle oil level.							
Inspect air filter.							
Inspect engine cooling fins.							
Check unusual engine noises.							
Check unusual operating noises.							
Check tire pressure.							
Check fluid leaks.							
Check instrument operation.							
Check accelerator operation.							
Lubricate all grease fittings.							
Touch up damaged paint.							

⚠ CAUTION

If you leave the key in the ignition switch, someone could accidently start the engine and seriously injure you or other bystanders.

Remove the key from the ignition and disconnect the wire from the spark plug before you do any maintenance. Set the wire aside so that it does not accidentally contact the spark plug.

⚠ WARNING

The cargo box must be raised to perform some routine maintenance.

A raised cargo box can fall and injure persons that are underneath it.

- **Always use the prop rod to hold the cargo box up before working under it.**
- **Remove any load material from the cargo box before working under it.**

Premaintenance Procedures

Maintaining the Machine under Special Operating Conditions

If the machine is subjected to any of the conditions listed below, maintenance should be performed twice as frequently.

- Desert operation
- Cold climate operation (below 10° C [50° F])
- Trailer towing
- Driving time typically less than 5 minutes
- Frequent operation in dusty conditions
- Construction work
- After extended operation in mud, sand, water, or similar dirty conditions, have your brakes inspected and cleaned as soon as possible. This will prevent any abrasive material from causing excessive wear.
- Under frequent heavy duty operating conditions, lubricate all grease fittings and inspect air cleaner daily to prevent excessive wear.

Preparing to Maintain the Machine

1. Park the machine on a level surface.
2. Set the parking brake, shut off the engine, and remove the ignition key.
3. Allow the engine and exhaust system to cool.

Jacking up the Machine

Whenever the engine is run for routine maintenance and/or engine diagnostics, the rear wheels of the machine should be 25 mm (1 inch) off the ground, with the rear axle supported on jack stands.

⚠ DANGER

The machine may be unstable when using a jack. It could slip off the jack, injuring anyone beneath it.

- **Do not start the engine while the machine is on a jack.**
- **Always remove the key from the ignition before getting off of the machine.**
- **Block the tires when the machine is on a jack.**

The jacking point at the front of the machine is on the front of the frame behind the towing tongue (Figure 23) The jacking point at the rear of the machine is under the axle tubes (Figure 24).

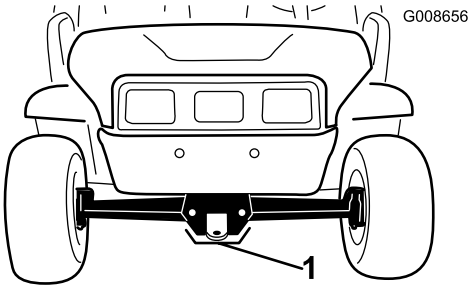

Figure 23

1. Front jacking point

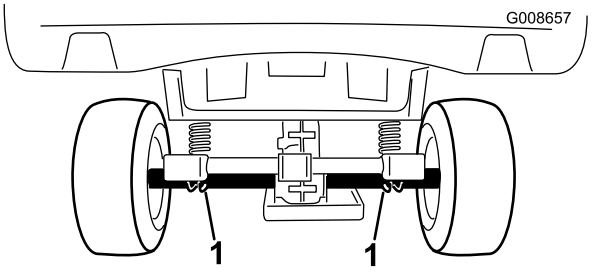

Figure 24

1. Rear jacking points

Opening and Closing the Hood

1. To open the hood, release the hood latches on both sides of the hood (Figure 25).

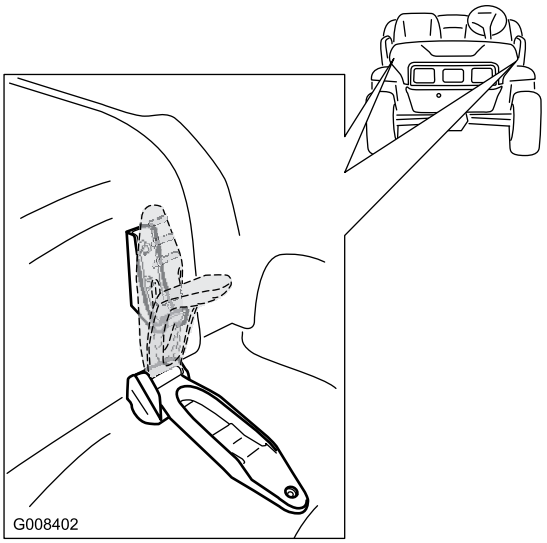

Figure 25

2. Rotate the hood up and back to raise it.
3. To close the hood, rotate it forward and down.
4. Secure the hood with both of the hood latches.

Lubrication

Greasing the Machine

Service Interval: Every 100 hours/Yearly (whichever comes first)—Grease the bearings and bushings. Grease the machine more frequently when using it for heavy-duty operations.

Grease Type: Number 2 general-purpose, lithium-base grease

1. Use a rag to wipe the grease fitting clean so that foreign matter cannot be forced into the bearing or bushing.
2. With a grease gun, apply 1 or 2 pumps of grease into the grease fittings on the machine.
3. Wipe the excess grease off the machine.

The grease fittings are located at the 4 tie-rod ends (Figure 26) and the 2 king pins (Figure 27).

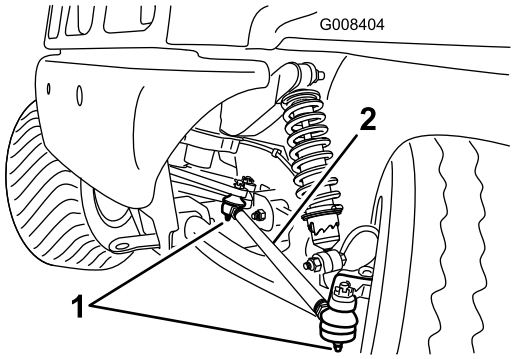

Figure 26
Left side shown

1. Grease fitting
2. Tie rod

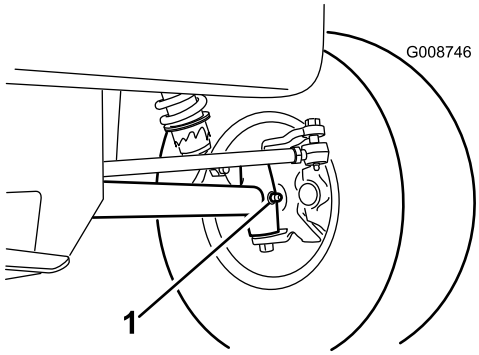

Figure 27
Left side shown

1. Grease fitting (king pin)

Engine Maintenance

Servicing the Air Cleaner

Note: Service the air cleaner more frequently (every few hours) if operating conditions are extremely dusty or sandy.

Removing the Air Filter

1. Raise the cargo box and secure it with the prop rod; refer to Raising the Cargo Box (page 16).
2. Release the latches securing the air-cleaner cover to the air-cleaner body (Figure 28).

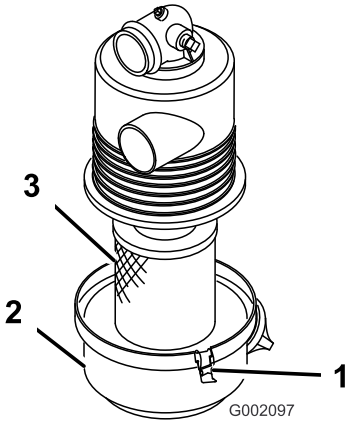

Figure 28

1. Latch
2. Air-cleaner cover
3. Air-cleaner body

3. Separate the cover from the body, and clean the inside of the air cleaner cover (Figure 28).
4. Gently slide the filter out of the air-cleaner body.

   Note: To reduce the amount of dust dislodged, avoid knocking the filter against the air cleaner body.
5. Inspect the air-filter element.
   - If the air-filter element is clean, install the filter, refer to Installing the Air Filter (page 28).
   - If the air-filter element is dirty, clean the filter; refer to Cleaning the Filter Element (page 27).
   - If the filter is damaged, replace the filter; refer to Replacing the Air Filter (page 28).

Cleaning the Filter Element

Service Interval: Every 100 hours—Inspect and clean the air filter element. Twice as often in special operating conditions; refer to Maintaining the Vehicle under Special Operating Conditions

Important: Do not use a damaged filter.

1. Remove the air filter element; refer to Removing the Air Filter (page 27).

2. Blow compressed air from the inside to the outside of the dry filter element.

   Note: Keep the air hose nozzle at least 2 inches (51 mm) from the filter and move the nozzle up and down while rotating the filter element.

   Important: To prevent damage to the filter element, do not exceed 689 kPa (100 psi) air pressure.

3. Inspect the filter element for holes and tears by looking through the filter toward a bright light.

   Note: If the air-filter element has tears or holes it must be replaced; refer to Replacing the Air Filter (page 28).

4. Install the air filter; refer to Installing the Air Filter (page 28).

Installing the Air Filter

Important: To prevent engine damage, always operate the engine with the complete air cleaner assembly installed.

1. Insert the filter into air cleaner body (Figure 28).

   Note: Ensure that the filter is sealed properly by applying pressure to the outer rim of the filter when installing it. Do not press on the flexible center of the filter.

2. Align the air-cleaner cover with the air-cleaner body (Figure 28).
3. Secure the cover to the air-cleaner body with the latches (Figure 28).
4. Lower the cargo box; refer to Lowering the Cargo Box (page 16).

Replacing the Air Filter

Service Interval: Every 200 hours—Replace the air filter. Replace the air filter sooner if it dirty or damaged.

1. Remove the air-filter element; refer to Removing the Air Filter (page 27).
2. Inspect the new filter for shipping damage.

   Note: Check the sealing end of the filter.

   Important: Do not install a damaged filter.

3. Install the new air filter; refer to Installing the Air Filter (page 28).

Servicing the Engine Oil

Service Interval: After the first 25 hours—Change the engine oil.

Every 100 hours—Change the engine oil. (Change the oil twice as often during special operating conditions; refer to Maintaining the Vehicle under Special Operating Conditions.)

After the first 25 hours—Change the oil filter (Models 07273 and 07273TC).

Every 100 hours—Change the oil filter (Models 07273 and 07273TC). (Change the filter twice as often during special operating conditions; refer to Maintaining the Vehicle under Special Operating Conditions.)

Note: Change the oil more frequently when operating conditions are extremely dusty or sandy.

Note: Dispose of the used engine oil and oil filters at a certified recycling center.

Changing the Oil (Models 07266TC and 07279)

Oil Type: Detergent oil (API service SJ or higher)

Oil Capacity: 1.1 L (1.2 qt)

Viscosity: See the following table.

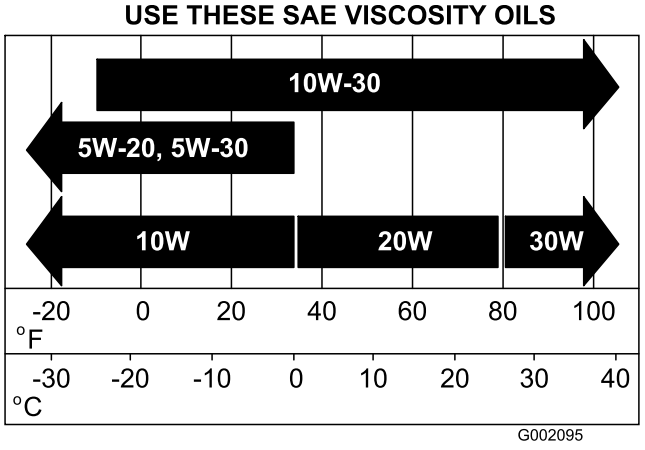

Figure 29

1. Start the vehicle and let the engine run for a few minutes.
2. Raise the cargo box; refer to Raising the Cargo Box (page 16).
3. Turn the ignition off, and remove the key.
4. Disconnect the battery; refer to Disconnecting the Battery (page 32).
5. Align a drain pan under the drain plug.
6. Remove the drain plug (Figure 30).

   Note: Allow the oil to completely drain from the engine.

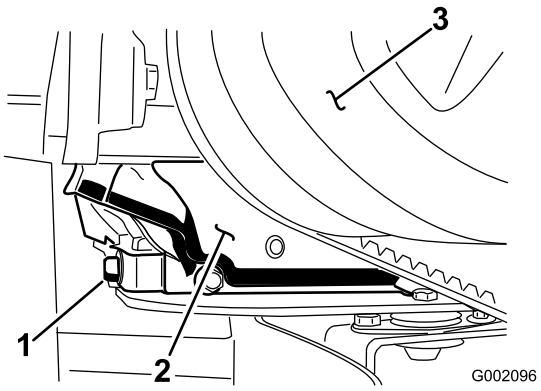

Figure 30

1. Engine-oil-drain plug
2. Engine
3. Primary drive clutch

Note: Dispose of the used oil at a certified recycling center.

7. Install the drain plug and seal and torque the drain plug to 13 ft-lb (17.6 N-m).
8. Clean around the oil dipstick and unscrew the cap.
9. Pour oil into the into the filler tube until the oil level is up to the Full mark on the dipstick.

   Note: Add the oil slowly and check the level often during this process. **Do not overfill the engine with oil.**
10. Insert the dip stick fully and then remove the dipstick. Check the oil level.
11. Install the dipstick.
12. Connect the battery, and lower the cargo box; refer to Connecting the Battery (page 33) and Lowering the Cargo Box (page 16).

Changing the Oil (Models 07273 and 07273TC)

Oil Type: Detergent oil (API service SL or higher)

Crankcase Capacity: 1.4 L (1.5 qt) when the filter is changed

Viscosity: See the table below

Note: Change the oil and oil filter more frequently when operating conditions are extremely dusty or sandy.

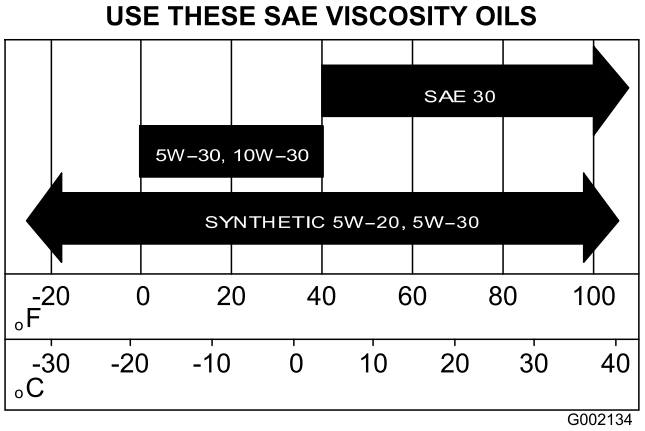

Figure 31

1. Start the vehicle and let the engine run for a few minutes.
2. Raise the cargo box; refer to Raising the Cargo Box (page 16).
3. Turn the ignition off, and remove the key.
4. Disconnect the battery; refer to Disconnecting the Battery (page 32).
5. Align a drain pan under the drain plug.
6. Remove the drain plug and seal (Figure 32).

   Note: Allow the oil to completely drain from the engine,

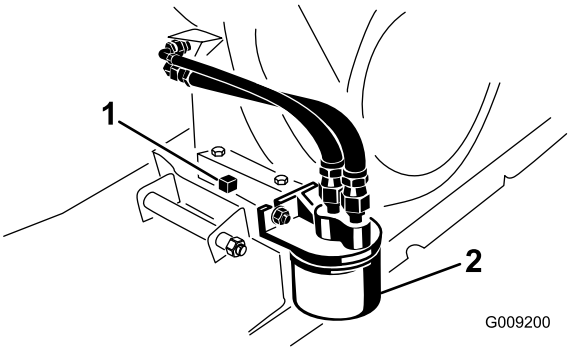

Figure 32

1. Engine-oil-drain plug
2. Engine-oil filter

7. Install the drain plug and seal and torque the drain plug to 13 ft-lb (17.6 N-m).
8. Pour oil into the fill opening until the oil level is up to the Full mark on the dipstick.

   Note: Add the oil slowly and check the level often during this process. **Do not overfill the engine with oil.**
9. Install the oil fill cap and dipstick firmly in place.
10. Connect the battery, and lower the cargo box; refer to Connecting the Battery (page 33) and Lowering the Cargo Box (page 16).

Changing the Oil Filter (Models 07273 and 07273TC)

Note: There is no oil filter for models 07266TC and 07279.

1. Drain the oil from the engine; refer to steps 1 through 7 in Changing the Oil (Models 07273 and 07273TC) (page 29).
2. Remove the existing oil filter (Figure 32).
3. Apply a light coat of clean oil to the gasket of the new oil filter.
4. Thread the new filter onto the filter adapter until the gasket contacts the mounting plate, then tighten the filter an additional 1/2 to 3/4 turn further (Figure 32).

   Note: Do not overtighten the oil filter.
5. Fill the crankcase with new oil of the specified type and viscosity; refer to Figure 31 in Changing the Oil (Models 07273 and 07273TC) (page 29).
6. Start and run the engine to check for oil leaks.
7. Stop the engine and check the oil level. Add oil if necessary.

Servicing the Spark Plug

Checking and Replacing the Spark Plug

Service Interval: Every 100 hours/Yearly (whichever comes first) Replace the spark plug if necessary.

Type: Champion RN14YC (or equivalent)

Air Gap: 0.030 inch (0.762 mm)

Important: A cracked, fouled, dirty, or malfunctioning spark plug must be replaced. Do not sand-blast, scrape, or clean electrodes by using a wire brush because grit may eventually release from the plug and fall into the cylinder. The result is usually a damaged engine.

Note: The spark plug usually lasts a long time; however, the plug should be removed and checked whenever the engine malfunctions.

1. Clean the area around the spark plug so that foreign matter cannot fall into the cylinder when the spark plug is removed.
2. Pull the wire off of the terminal of the spark plug.
3. Remove the plug from the cylinder head.
4. Check the condition of the side electrode, center electrode, and center electrode insulator to ensure that there is no damage (Figure 33).

   Note: Do not use a damaged or worn spark plug. Replace it with a new spark plug of the specified type.

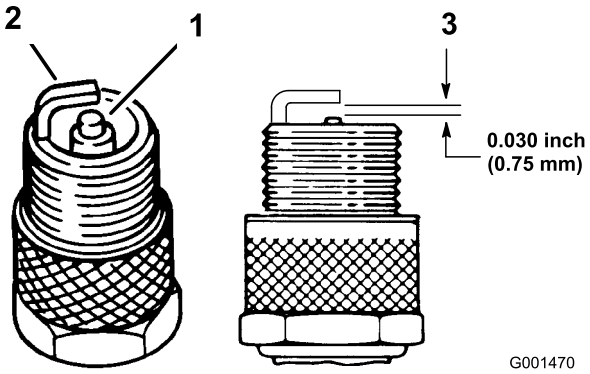

Figure 33

1. Center electrode insulator
2. Side electrode
3. Air gap (not to scale)

5. Set the air gap between the center and side of the electrodes at 0.762 mm (0.030 inch) (Figure 33).
6. Install the spark plug into the cylinder head, and torque the plug to 20 N-m (14.7 ft-lb).
7. Install the spark plug wire.
8. **Models 07273 and 07273TC only**—repeat steps 1 through 7 for the other spark plug.

Fuel System Maintenance

Inspecting Fuel Lines and Connections

Service Interval: Every 400 hours/Yearly (whichever comes first)

Inspect the fuel lines, fittings, and clamps for signs of leaking, deterioration, damage, or loose connections.

Note: Repair any damaged or leaking fuel system component before using the machine.

Replacing the Fuel Filter

Service Interval: Every 800 hours/Yearly (whichever comes first)

1. Raise the box and support it with the prop rod; refer to Raising the Cargo Box (page 16).
2. Turn the ignition off, and remove the key.
3. Disconnect the battery; refer to Disconnecting the Battery (page 32).
4. Place a clean container under the fuel filter.
5. Remove the clamps securing the fuel filter to the fuel lines (Figure 34).

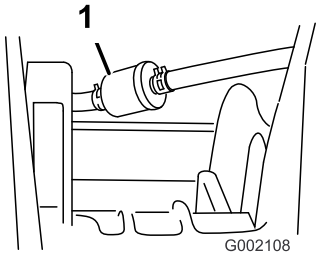

Figure 34

1. Fuel filter

6. Remove the old fuel filter from the fuel lines.

   Note: Drain the old filter and discard it at a certified recycling center.

7. Install the replacement filter to the fuel lines so that the arrow points **toward** the carburetor.
8. Secure the filter to the lines with the clamps the you removed in step 5.
9. Connect the battery, and lower the cargo box; refer to Disconnecting the Battery (page 32) and Lowering the Cargo Box (page 16).

Servicing the Carbon Canister

Checking the Air Filter for the Carbon Canister

Check the opening at the bottom of the air filter for the carbon canister to ensure that it is clean and free of debris and obstructions (Figure 35).

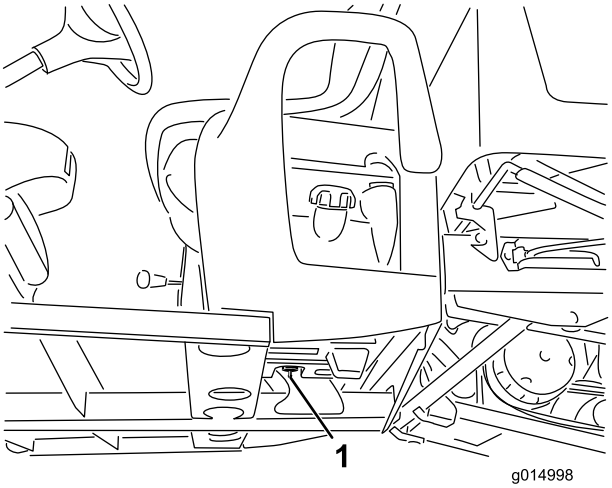

Figure 35

1. Air filter opening (located inboard of the fuel tank and below the carbon canister)

Replacing the Carbon-canister Filter

1. Remove the barbed fitting of the carbon-canister filter from the hose at the bottom of the carbon canister, and remove the filter.

   Note: Discard the old filter.

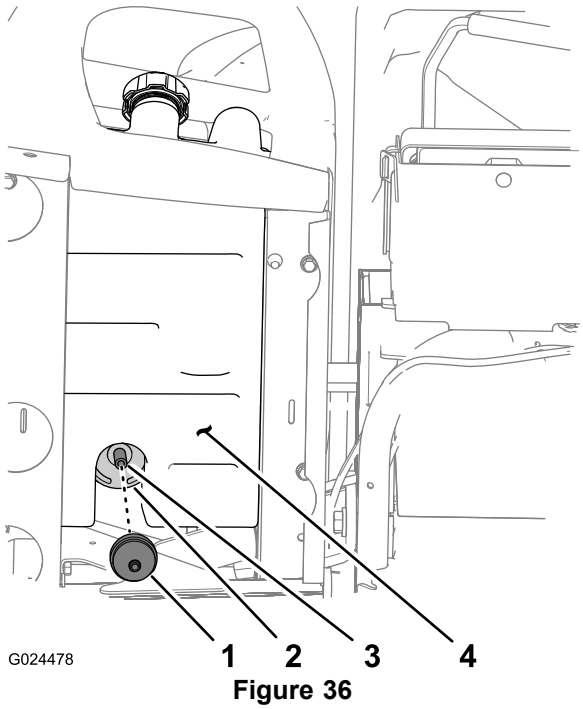

Figure 36

1. Carbon-canister Filter
2. Carbon canister
3. Hose
4. Fuel tank

2. Fully insert the barbed fitting of the new carbon-canister filter into the hose at the bottom of the carbon canister.

Electrical System Maintenance

Maintaining the Battery

Disconnecting the Battery

1. Remove the battery cover from the top of the battery (Figure 37).

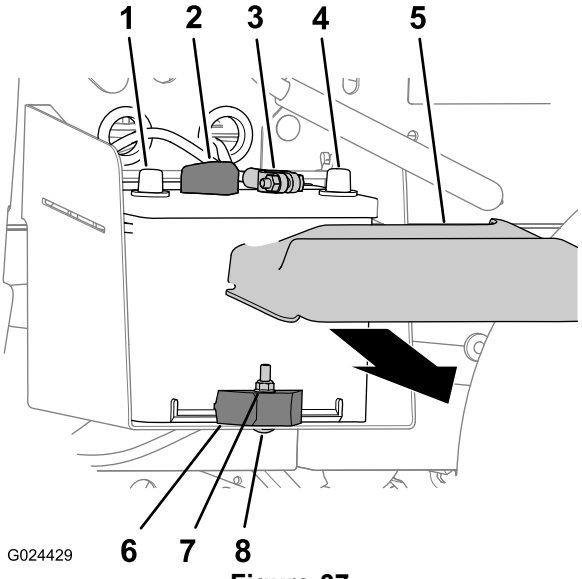

Figure 37

1. Positive-battery terminal
2. Positive-battery cable
3. Negative-battery cable
4. Negative-battery terminal
5. Battery cover
6. Locknut
7. Battery clamp
8. Carriage bolt

2. Disconnect the positive-battery cable from the terminal of the battery (Figure 37).
3. Disconnect the negative-battery cable from the terminal of the battery (Figure 37).

Removing the Battery

1. Disconnect the battery cables; refer to Disconnecting the Battery (page 32).
2. Remove the locknut, carriage bolt, and battery clamp that secures the battery to the battery tray (Figure 37).
3. Remove the battery from the battery tray (Figure 37).

Installing the Battery

1. Align the battery to the battery tray of the machine (Figure 37).

   Note: Ensure that the positive and negative posts of the battery are aligned as shown in Figure 37.

2. Secure the battery to the battery tray with the battery clamp, carriage bolt, and locknut (Figure 37).
3. Connect the battery cables; refer to Connecting the Battery (page 33).

Connecting the Battery

1. Connect the negative-battery cable to the terminal of the battery (Figure 37).
2. Connect the positive-battery cable to the terminal of the battery (Figure 37).
3. Install the battery cover onto the top of the battery (Figure 37).

Charging the Battery

Important: Always keep the battery fully charged (1.260 specific gravity). This is especially important to prevent battery damage when the temperature is below 0° C (32° F).

1. Remove the battery from the machine; refer to Removing the Battery.
2. Connect a 3 to 4 amp battery charger to the battery posts. Charge the battery at a rate of 3 to 4 amp for 4 to 8 hours (12 volts). Do not overcharge the battery.

   ⚠ WARNING

   Charging the battery produces gasses that can explode.

   Never smoke near the battery and keep sparks and flames away from battery.

3. Install the battery in the chassis; refer to Installing the Battery.

Storing the Battery

If the machine will be stored for more than 30 days, remove the battery and charge it fully. Either store it on the shelf or on the machine. Leave the cables disconnected if it is stored on the machine. Store the battery in a cool atmosphere to avoid quick deterioration of the charge in the battery. To prevent the battery from freezing, make sure it is fully charged.

Replacing the Fuses

There are 3 fuses in the electrical system. They are located beneath the dash on the driver's side (Figure 38).

Auxillary (Open)	30 A
Ignition System/Horn	10 A
Headlights	15 A
Power Point	20 A

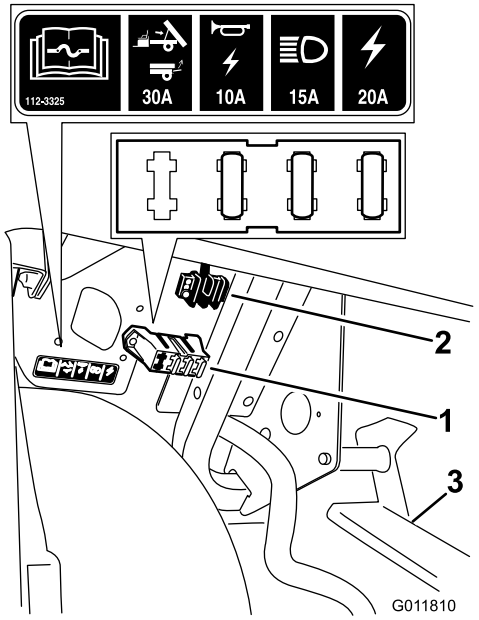

Figure 38

1. Fuse block
2. Ground block
3. Pedal assembly

Maintaining the Headlights

Replacing the Bulbs

⚠ CAUTION

The halogen bulbs become extremely hot when in operation. Handling a hot bulb can cause severe burns and personal injury.

Always all enough time to for the bulbs to cool before replacing them. Use care whenever handling the bulb.

⚠ CAUTION

Any surface contamination can damage the headlight bulb and leading to its failure or explosion creating a serious safety hazard.

Head light lamps should be handled without touching the clear quartz, either by using a clean paper towel or carefully holding the base.

Specification: See your *Parts Catalog*.

1. Ensure that the light switch is in the Off position; refer to Light Switch (page 13).
2. Open the hood; refer to Opening and Closing the Hood (page 26)
3. Disconnect the electrical connector for the harness from the connector of the lamp assembly at the back of the headlight housing (Figure 39).

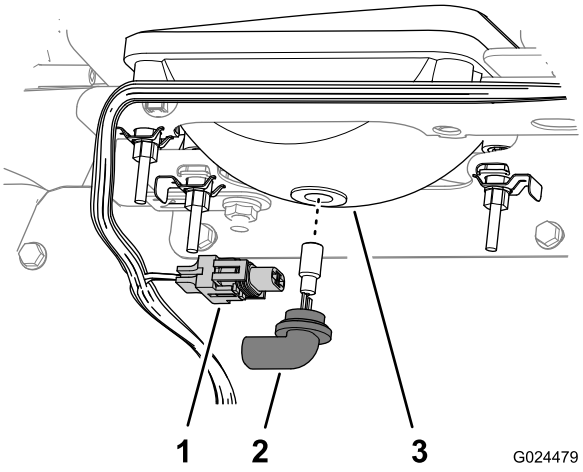

Figure 39

1. Harness-electrical connector
2. Lamp assembly
3. Headlight housing

4. Rotate the lamp assembly 1/4 turn counterclockwise and moving it rearward, out of the headlight housing (Figure 39).
5. Insert the new lamp assembly and headlight housing and align the tabs in the lamp assembly with the slots in the headlight housing (Figure 39).

   Note: Take care not to touch the halogen lamp when installing the new light bulb.
6. Secure lamp assembly by turning it 1/4 turn clockwise (Figure 39).
7. Connect the electrical connector for the harness to the connector of the new lamp assembly (Figure 39).
8. Close the hood; refer to Opening and Closing the Hood (page 26)

Replacing the Headlight

1. Disconnect the electrical connector for the harness from the connector of the lamp assembly (Figure 40).

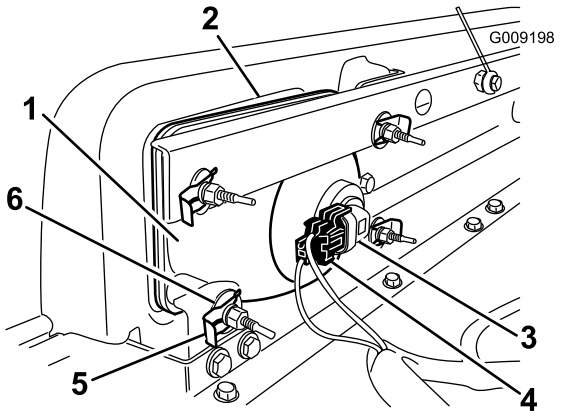

Figure 40

1. Headlight
2. Opening in the bumper
3. Lamp assembly
4. Harness-electrical connector
5. Speed clip
6. Flat washer

2. Remove the speed clips and washers that secure the headlight to the headlight bracket (Figure 40).

   Note: Retain all parts for installation of the new headlight.
3. Remove the headlight assembly by moving it forward through the opening in the front bumper (Figure 40).
4. Install the new headlight through the opening in the bumper (Figure 40). Ensure the adjustment posts are lined up with the holes in the mounting bracket behind the bumper.
5. Secure the headlight assembly with the washers and speed clips that you removed in step 2.
6. Connect the electrical connector for the harness to the connector of the lamp assembly (Figure 40).
7. Adjust the headlights to direct the beams to the desired position, refer to Adjusting the Headlights (page 34).

Adjusting the Headlights

Use the following procedure to adjust the headlight beam position whenever a headlight assembly is replaced or removed.

1. Turn the ignition key to the On position, and turn on the headlights.
2. At the headlight assembly, use the fasteners to pivot the headlight assembly and affect the cast beam position.

Drive System Maintenance

Maintaining the Tires

Service Interval: Every 100 hours—Check the condition of the tires and rims.

Every 100 hours—Torque the wheel-lug nuts.

1. Inspect the tires an rims for signs of wear and damage.

   Note: Operating accidents, such as hitting curbs, can damage a tire or rim and also disrupt wheel alignment, so inspect tire condition after an accident.

2. Torque the wheel-lug nuts to 61 to 88 N-m (45 to 65 ft-lb).

Adjusting Front Wheel Toe-in and Camber

Service Interval: Every 100 hours/Yearly (whichever comes first)—Check the front wheel toe-in and camber.

Important: You will need to obtain tool number Toro6010 from your Toro Distributor to perform this procedure.

The toe-in should be 0 to 6 mm (0 to 1/4 inch) and the camber should be 0+1/2 degree, i.e., the bottom of the wheel rims angled in 2.3 mm (0.09 inch) more than the top, with the following parameters:

- Check the tire pressure to ensure that the front tires are inflated to 82 kPa (12 psi).
- Either, add weight to the driver's seat equal to the average operator who will run the machine, or have an operator sit on the seat. The weight or operator must remain on the seat for the duration of the procedure.
- On a level surface, roll the machine straight back 2 to 3 m (6 to 10 ft) and then straight forward to the original starting position. This will allow the suspension to settle into the operating position.
- Measure the toe-in with the wheels facing straight ahead.

1. To check the camber, place a 90 degree square on the ground with the vertical edge touching the face of the tire (Figure 41).

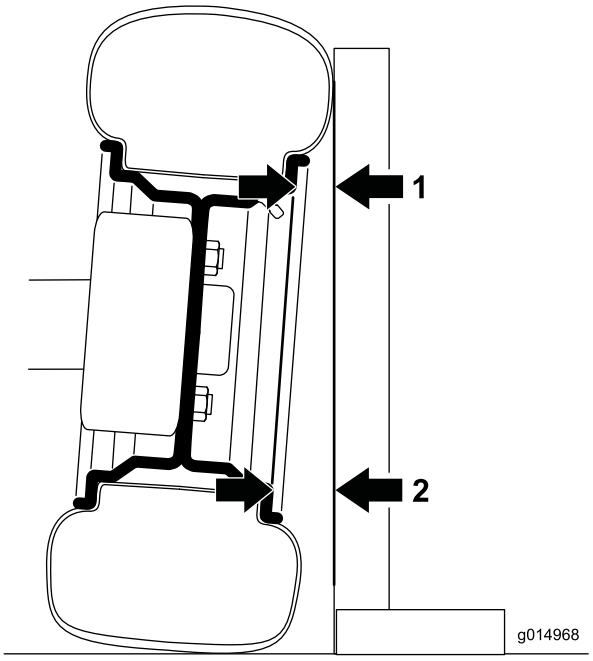

Figure 41

Left, front wheel shown from the front; the angle is exaggerated for illustrative purposes

1. Measure here
2. Measure here—should be 2.3 mm (0.09 inch) larger than the measurement at 1

2. Measure from the same part of the rim on the top and bottom of the tire to the square (Figure 41).

   Note: The distance of the bottom measurement should be 2.3 mm (0.09 inch) larger than the top measurement. Complete the measurement on both front tires before adjusting.

   Complete the following procedure for each tire that needs adjusting:

3. Using tool Toro 6010, rotate the collar on the shock absorber to change the length of the spring (Figure 42).
   - If the bottom measurement was too short, reduce the length of the spring.
   - If the bottom measurement was too long, increase the length of the spring.

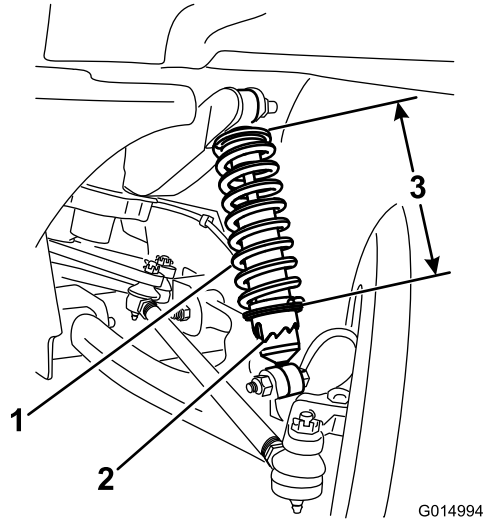

Figure 42

1. Shock-absorber spring
2. Collar
3. Spring length

4. On a level surface, roll the machine straight back 2 to 3 m (6 to 10 ft) and then straight forward to the original starting position.
5. Repeat this procedure, starting with step 1 until the camber is set correctly for both front wheels.
6. Measure the distance between both of the front tires at the axle height at both the front and rear of the front tires (Figure 43).

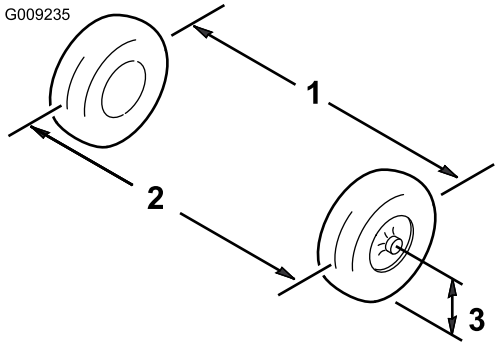

Figure 43

1. Tire center line—back
2. Tire center line—front
3. Axle center line

7. If the measurement does not fall within 0 to 6 mm (0 to 1/4 inch), loosen the jam nuts at both ends of the tie rods (Figure 44).

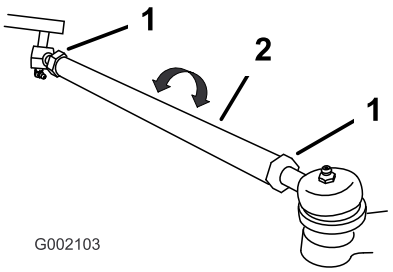

Figure 44

1. Jam nut
2. Tie rod

8. Rotate both tie rods to move the front of the tire inward or outward.
9. Tighten the tie rod jam nuts when the adjustment is correct.
10. Ensure that there is full travel of the steering wheel in both directions.

Checking the Transmission-oil Level

Service Interval: Every 100 hours

Oil Type: SAE 10W30 (API service SJ or higher)

Oil Capacity: 1.4 L (1.5 qt)

1. Wipe the area around the fill plug clean with a rag (Figure 46).

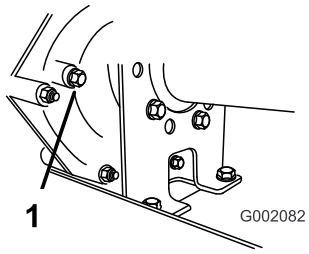

Figure 45

1. Fill plug

2. Remove the fill plug by rotating it counterclockwise (Figure 46).

   Note: Retain the fill plug and gasket for installation in step 5.
3. Check the transmission-oil level by looking into the hole in the transmission for the fill plug (Figure 46).

   Note: The transmission-oil level should be at the bottom of the threads in the fill-plug hole.
4. If the oil level is below the threads, add the specified oil through the fill-plug hole until the oil level in the transmission is even with the bottom of the threads.
5. Install and tighten the fill plug and gasket into the fill-plug hole of the transmission (Figure 46).

Changing the Transaxle Fluid

Service Interval: Every 800 hours/Yearly (whichever comes first)

Oil Type: SAE 10W30 (API service SJ or higher)

Oil Capacity: 1.4 L (1.5 qt)

1. Wipe the area around the fill and drain plugs clean with a rag (Figure 46).

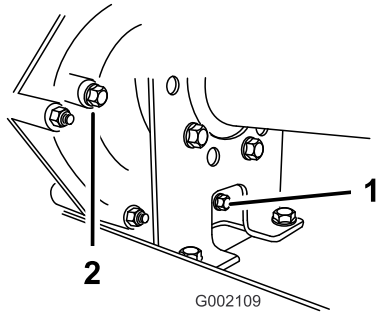

Figure 46

1. Drain plug
2. Fill plug

2. Align a drain pan with a capacity of 2 L (2.1 qt) or more under the drain plug.
3. Remove the fill plug by rotating it counterclockwise (Figure 46).

   Note: Retain the fill plug and gasket for installation in step 7.
4. Remove the drain plug by rotating it counterclockwise (Figure 46).

   Note: Retain the drain plug and gasket for installation in step 5.

   Note: Allow the oil to drain from the transaxle completely.
5. Install and tighten the drain plug and gasket into the drain-plug hole of the transmission (Figure 46).

   Note: Dispose of the used oil at a certified recycling center.
6. Fill the reservoir (Figure 47) through the fill-plug hole with approximately 1.4 L (1-1/2 qt) of the specified oil or until the oil level in the transmission is even with the bottom of the threads. (Figure 46).

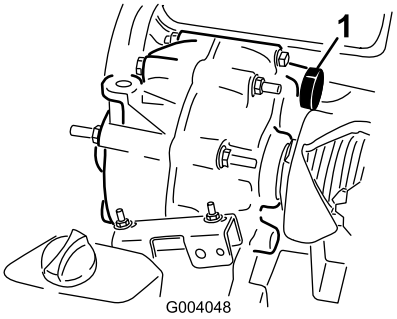

Figure 47

1. Oil fill

7. Install and tighten the fill plug and gasket into the fill-plug hole of the transmission (Figure 46).
8. Start the engine and operate the machine.
9. Check the oil level and add more oil if the level is below the threads of the fill-plug hole (Figure 46).

Checking and Adjusting Neutral

Service Interval: Every 100 hours

When performing routine maintenance and/or engine diagnostics, the transaxle must be shifted into neutral (Figure 48). The vehicle has a neutral position on the shift lever, which controls the neutral in the transaxle. The following steps should be taken to make sure that the neutral shift lever operates the transaxle neutral correctly:

1. Set the shift lever into the Neutral position.
2. Ensure that the neutral bracket is in the neutral position (level to the cable mounting bracket located below the shift bracket) by turning the driven clutch (Figure 48).

   Note: The vehicle should not roll back and forth. If it does, manually move the neutral bracket to the Neutral position.

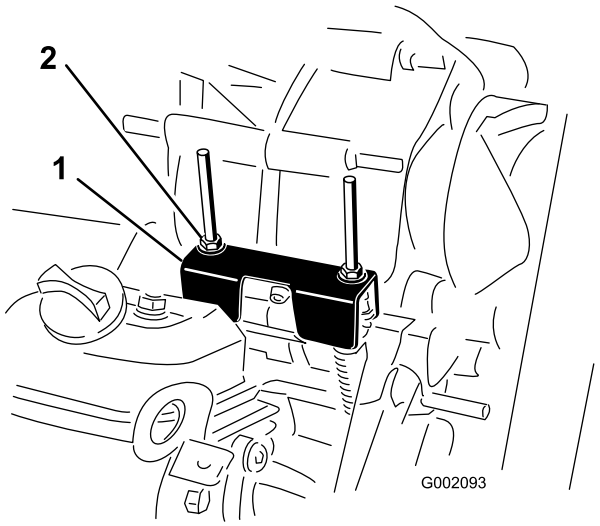

Figure 48

1. Neutral bracket
2. Locknuts

3. Rotate one of the locknuts (Figure 48) to achieve a 0.762 to 1.524 mm (0.030 to 0.060 inch) gap between the bottom of the nut/washer and the neutral bracket.

   Note: You must hold the threaded shaft below the bracket when adjusting the locknut position on top.

4. Rotate the other locknut to achieve a 0.76 to 1.52 mm (0.03 to 0.06 inch) gap between the bottom of the nut/washer and the neutral bracket.
5. Pull up on each shift cable an ensure that there is a 0.76 to 1.52 mm (0.03 to 0.06 inch) between the nut/washer and the neutral bracket (Figure 49).

   Note: If there is a not a gap, adjust the nuts to achieve the specified gap.

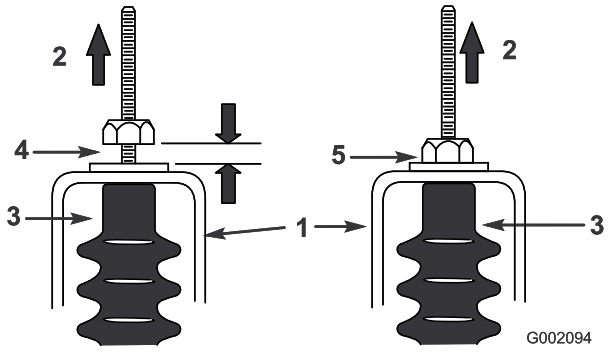

Figure 49

1. Neutral bracket
2. Pull up
3. Cable boot
4. 0.76 to 1.52 mm (0.03 to 0.06 inch) gap
5. **Wrong**—adjust the to achieve a gap of 0.76 to 1.52 mm (0.03 to 0.06 inch) inch

6. Start the engine and shift into Forward, Reverse, and Neutral several times to ensure that the neutral bracket is operating properly.

Maintaining the Primary-drive Clutch

Service Interval: Every 400 hours/Yearly (whichever comes first)

⚠ CAUTION

The dust in the clutch will become airborne and could damage your eyes or you could inhale it causing breathing difficulties.

Wear safety goggles and a dust mask or other eye and respiratory protection when performing this procedure.

1. Raise and latch the cargo box; refer to Raising the Cargo Box (page 16).
2. Remove the 3 bolts securing the cover to the clutch, and remove the cover (Figure 50).

   Note: Retain the cover and bolts for installation.

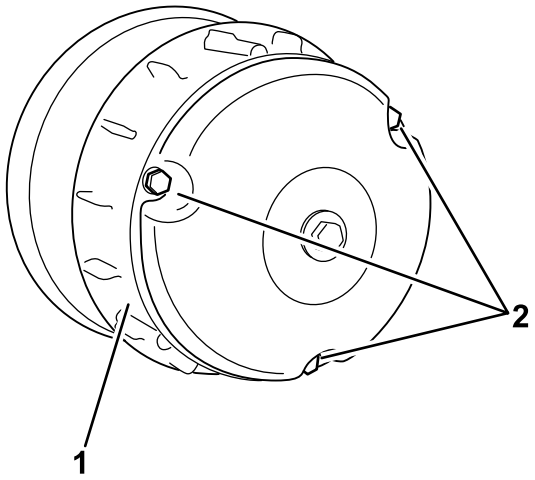

Figure 50

1. Cover
2. Bolts

3. Thoroughly clean the inside of the cover and the inner components of the clutch using compressed air.
4. Install the clutch cover and secure it with the 3 bolts (Figure 50) that you removed in 2.
5. Lower the cargo box; refer to Lowering the Cargo Box (page 16).

Cooling System Maintenance

Cleaning the Engine Cooling Areas

Service Interval: Every 100 hours Clean the cooling system twice as often during special operating conditions; refer to Maintaining the Vehicle under Special Operating Conditions.

Important: Operating the engine with a blocked rotating screen, dirty or plugged cooling fins, or cooling shrouds removed will cause engine damage due to overheating.

Important: Never clean the engine with a pressure washer because water could contaminate the fuel system.

Clean the rotating screen, cooling fins, and external surfaces of the engine.

Note: Clean the engine cooling components more often under extremely dusty and dirty conditions.

Brake Maintenance

Inspecting the Brakes

Service Interval: Every 100 hours

Brakes are a critical safety component of the machine. As with all safety components, they should be closely inspected at regular intervals to ensure optimum performance and safety.

- Inspect the brake shoes for wear or damage. If the lining (brake pad) thickness is less than 1.6 mm (1/16 inch), the brake shoes should be replaced.
- Inspect the backing plate and other components for signs of excessive wear or deformation. If any deformation is found, the appropriate components must be replaced.
- Check the brake fluid level; refer to Checking the Brake-fluid Level (page 19).

Adjusting the Parking Brake

Service Interval: Every 200 hours

1. Pry the rubber cover off the parking brake.
2. Loosen the set screw securing the knob to the parking-brake lever (Figure 51).

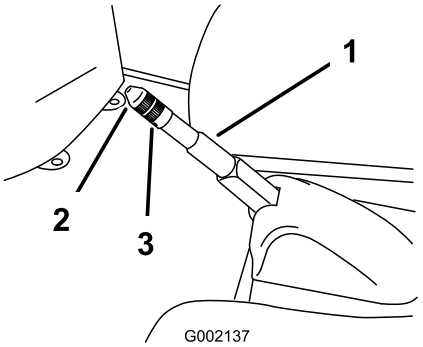

Figure 51

1. Parking-brake lever
2. Knob
3. Set screw

3. Rotate the knob until a force of 133 to 156 N-m (30 to 35 ft-lb) is required to actuate the lever.
4. Tighten the set screw and install the rubber cover.

Belt Maintenance

Servicing the Drive Belt

Checking the Drive Belt

Service Interval: After the first 8 hours

Every 200 hours

1. Raise the cargo box; refer to Raising the Cargo Box (page 16).
2. Shift the transmission into Neutral, set the parking brake, shut off the engine, and remove the ignition key.
3. Rotate and inspect the belt (Figure 52) for signs of excessive wear or damage.

   Note: Replace the belt if it is excessively worn or damaged; refer to Replacing the Drive Belt (page 40).

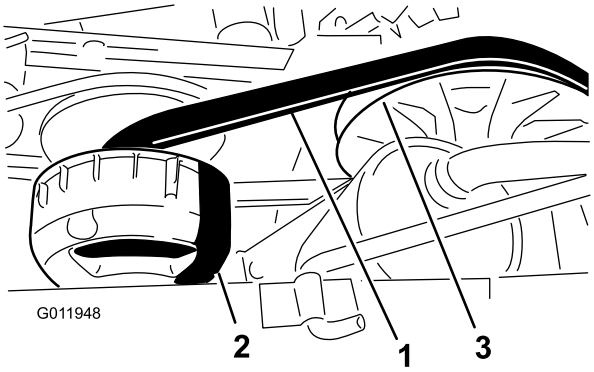

Figure 52

1. Drive belt
2. Primary clutch
3. Secondary clutch

4. Lower the cargo box; refer to Lowering the Cargo Box (page 16)

Replacing the Drive Belt

1. Raise the cargo box; refer to Raising the Cargo Box (page 16).
2. Shift the transmission into Neutral, set the parking brake, shut off the engine, and remove the ignition key.
3. Rotate and route the belt over the secondary clutch (Figure 52).
4. Remove the belt from the primary clutch (Figure 52).

   Note: Discard the old belt.
5. Align the new belt over the primary clutch (Figure 52).
6. Rotate and route the belt over the secondary clutch (Figure 52).
7. Lower the cargo box; refer to Lowering the Cargo Box (page 16).

Adjusting the Starter-Generator Belt

Service Interval: After the first 8 hours

Every 200 hours

1. Raise the cargo box; refer to Raising the Cargo Box (page 16).
2. Loosen the pivot nut for the starter generator (Figure 53).

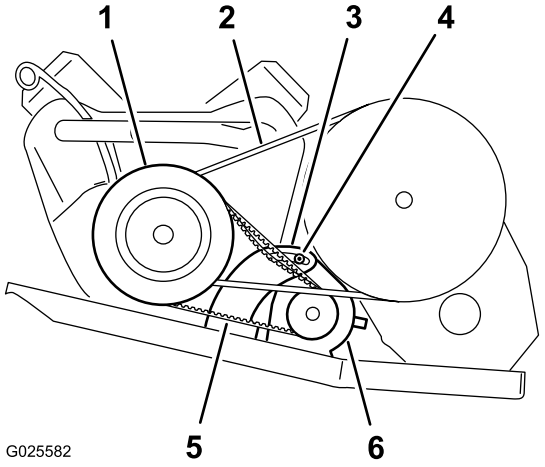

Figure 53

1. Primary drive clutch housing
2. Drive belt
3. Generator-pivot bracket
4. Pivot nut
5. Starter-generator belt
6. Starter generator

3. Align a pry bar between the engine mount and starter.
4. Apply downward pressure to the pry bar to rotate the starter down in the slot until the belt tension only allows 6 mm (1/4 inch) belt deflection with 44 N (10 lb) of force (Figure 53).
5. Tighten the pivot nut hand tight, and remove the pry bar (Figure 53).
6. Torque the pivot nut to 88 to 115 N-m (65 to 85 ft-lb).
7. Lower the cargo box; refer to Lowering the Cargo Box (page 16).

Chassis Maintenance

Adjusting the Cargo-box Latches

If the cargo-box latch is out of adjustment, the cargo box vibrates up and down as you drive the vehicle. You can adjust the latch posts to make the latches hold the cargo box snugly to the chassis.

1. Loosen the locknut on the end of the latch post (Figure 54).

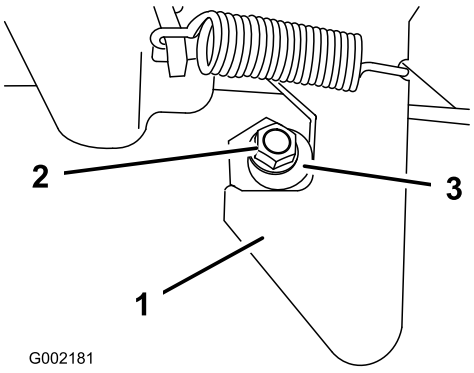

Figure 54

1. Latch
2. Locknut
3. Latch post

2. Rotate the latch post clockwise until it is snug against the hook portion of the latch (Figure 54).
3. Torque the locknut to 19.7 to 25.4 N-m (175 to 225 in-lb).
4. Repeat this steps 1 through 3 for the latch on the other side of the vehicle.

Cleaning

Washing the Machine

The machine should be washed as needed. Use water alone or with a mild detergent. A rag may be used when washing the machine, however the hood will loose some of its luster.

Important: Do not use power washing equipment to wash the machine. Power washing equipment may damage the electrical system, loosen important decals, or wash away necessary grease at friction points. Avoid excessive use of water near the control panel, engine, and battery.

Storage

1. Position the machine on a level surface, set the parking brake, stop the engine, and remove the ignition key.
2. Clean the dirt and grime from the entire machine, including the outside of the cylinder-head fins of the engine and blower housing.

   Important: You can wash the machine with mild detergent and water. Do not use power washing equipment to wash the machine. Pressure washing the machine may damage the electrical system or wash away necessary grease at friction points. Avoid excessive use of water near the control panel, lights, engine, and the battery.
3. Inspect the brakes; refer to Inspecting the Brakes (page 39).
4. Service the air cleaner; refer to Servicing the Air Cleaner (page 27).
5. Grease the machine; refer to Lubrication (page 27).
6. Change the engine oil; refer to Changing the Oil (Models 07266TC and 07279) (page 28) and Changing the Oil (Models 07273 and 07273TC) (page 29).
7. Check the tire pressure; refer to Checking the Tire Pressure (page 20).
8. For storage over 30 days, prepare the fuel system as follows:

   A. Add a petroleum based fuel stabilizer/conditioner to fuel in the tank.

      Important: Do not store stabilizer/conditioned gasoline over 90 days

      Follow mixing instructions from fuel stabilizer manufacturer. (1 oz per gallon).

      Important: Do not use an alcohol based fuel stabilizer (ethanol or methanol).

      Note: The use of fuel stabilizer/conditioner is most effective when mixed with fresh gasoline and used at all times.

   B. Run the engine to distribute conditioned fuel through the fuel system (5 minutes).

   C. Shut off the engine, allow the engine to cool, and drain the fuel tank.

      Note: Dispose of fuel properly. Recycle as according to local codes.

   D. Start the engine again and run it until it stops.

   E. Choke the engine.

   F. Start and run the engine until it will not start again.
9. Remove the spark plugs and check their condition; refer to Checking and Replacing the Spark Plug (page 30).
10. With the spark plugs removed from the engine, pour 2 tablespoons of engine oil into the spark plug hole.
11. Use the electric starter to crank the engine and distribute the oil inside the cylinder.
12. Install the spark plug(s) and tighten it to recommended torque; refer to Checking and Replacing the Spark Plug (page 30).

    Note: Do not install the wire on the spark plug(s).
13. Remove the battery from the chassis, and charge it fully; refer to Removing the Battery (page 32).

    Important: The battery must be fully charged to prevent it from freezing and being damaged at temperatures below 0° C (32° F). A fully charged battery maintains its charge for about 50 days at temperatures lower than 4° C (40° F).

    Note: Do not connect the battery cables to the battery posts during storage.
14. Check and tighten all bolts, nuts, and screws. Repair or replace any part that is damaged.
15. Paint all scratched or bare metal surfaces.

    Note: Paint is available from your Authorized Service Dealer.
16. Store the machine in a clean, dry garage or storage area.
17. Remove the ignition key and put it in a safe place out of the reach of children.
18. Cover the machine to protect it and keep it clean.

International Distributor List

Distributor:	Country:	Phone Number:	Distributor:	Country:	Phone Number:
Agrolanc Kft	Hungary	36 27 539 640	Maquiver S.A.	Colombia	57 1 236 4079
Balama Prima Engineering Equip.	Hong Kong	852 2155 2163	Maruyama Mfg. Co. Inc.	Japan	81 3 3252 2285
B-Ray Corporation	Korea	82 32 551 2076	Mountfield a.s.	Czech Republic	420 255 704 220
Casco Sales Company	Puerto Rico	787 788 8383	Mountfield a.s.	Slovakia	420 255 704 220
Ceres S.A.	Costa Rica	506 239 1138	Munditol S.A.	Argentina	54 11 4 821 9999
CSSC Turf Equipment (pvt) Ltd.	Sri Lanka	94 11 2746100	Norma Garden	Russia	7 495 411 61 20
Cyril Johnston & Co.	Northern Ireland	44 2890 813 121	Oslinger Turf Equipment SA	Ecuador	593 4 239 6970
Cyril Johnston & Co.	Republic of Ireland	44 2890 813 121	Oy Hako Ground and Garden Ab	Finland	358 987 00733
Equiver	Mexico	52 55 539 95444	Parkland Products Ltd.	New Zealand	64 3 34 93760
Femco S.A.	Guatemala	502 442 3277	Perfetto	Poland	48 61 8 208 416
ForGarder OU	Estonia	372 384 6060	Pratoverde SRL.	Italy	39 049 9128 128
G.Y.K. Company Ltd.	Japan	81 726 325 861	Prochaska & Cie	Austria	43 1 278 5100
Geomechaniki of Athens	Greece	30 10 935 0054	RT Cohen 2004 Ltd.	Israel	972 986 17979
Golf international Turizm	Turkey	90 216 336 5993	Riversa	Spain	34 9 52 83 7500
Guandong Golden Star	China	86 20 876 51338	Lely Turfcare	Denmark	45 66 109 200
Hako Ground and Garden	Sweden	46 35 10 0000	Solvert S.A.S.	France	33 1 30 81 77 00
Hako Ground and Garden	Norway	47 22 90 7760	Spypros Stavrinides Limited	Cyprus	357 22 434131
Hayter Limited (U.K.)	United Kingdom	44 1279 723 444	Surge Systems India Limited	India	91 1 292299901
Hydroturf Int. Co Dubai	United Arab Emirates	97 14 347 9479	T-Markt Logistics Ltd.	Hungary	36 26 525 500
Hydroturf Egypt LLC	Egypt	202 519 4308	Toro Australia	Australia	61 3 9580 7355
Irrimac	Portugal	351 21 238 8260	Toro Europe NV	Belgium	32 14 562 960
Irrigation Products Int'l Pvt Ltd.	India	0091 44 2449 4387	Valtech	Morocco	212 5 3766 3636
Jean Heybroek b.v.	Netherlands	31 30 639 4611	Victus Emak	Poland	48 61 823 8369

European Privacy Notice

The Information Toro Collects
Toro Warranty Company (Toro) respects your privacy. In order to process your warranty claim and contact you in the event of a product recall, we ask you to share certain personal information with us, either directly or through your local Toro company or dealer.

The Toro warranty system is hosted on servers located within the United States where privacy law may not provide the same protection as applies in your country.

BY SHARING YOUR PERSONAL INFORMATION WITH US, YOU ARE CONSENTING TO THE PROCESSING OF YOUR PERSONAL INFORMATION AS DESCRIBED IN THIS PRIVACY NOTICE.

The Way Toro Uses Information
Toro may use your personal information to process warranty claims, to contact you in the event of a product recall and for any other purpose which we tell you about. Toro may share your information with Toro's affiliates, dealers or other business partners in connection with any of these activities. We will not sell your personal information to any other company. We reserve the right to disclose personal information in order to comply with applicable laws and with requests by the appropriate authorities, to operate our systems properly or for our own protection or that of other users.

Retention of your Personal Information
We will keep your personal information as long as we need it for the purposes for which it was originally collected or for other legitimate purposes (such as regulatory compliance), or as required by applicable law.

Toro's Commitment to Security of Your Personal Information
We take reasonable precautions in order to protect the security of your personal information. We also take steps to maintain the accuracy and current status of personal information.

Access and Correction of your Personal Information
If you would like to review or correct your personal information, please contact us by email at legal@toro.com.

Australian Consumer Law

Australian customers will find details relating to the Australian Consumer Law either inside the box or at your local Toro Dealer.

The Toro Total Coverage Guarantee

A Limited Warranty

Conditions and Products Covered

The Toro Company and its affiliate, Toro Warranty Company, pursuant to an agreement between them, jointly warrant your Toro Commercial product ("Product") to be free from defects in materials or workmanship for two years or 1500 operational hours*, whichever occurs first. This warranty is applicable to all products with the exception of Aerators (refer to separate warranty statements for these products). Where a warrantable condition exists, we will repair the Product at no cost to you including diagnostics, labor, parts, and transportation. This warranty begins on the date the Product is delivered to the original retail purchaser.
* Product equipped with an hour meter.

Instructions for Obtaining Warranty Service

You are responsible for notifying the Commercial Products Distributor or Authorized Commercial Products Dealer from whom you purchased the Product as soon as you believe a warrantable condition exists. If you need help locating a Commercial Products Distributor or Authorized Dealer, or if you have questions regarding your warranty rights or responsibilities, you may contact us at:

Toro Commercial Products Service Department
Toro Warranty Company
8111 Lyndale Avenue South
Bloomington, MN 55420-1196

952–888–8801 or 800–952–2740
E-mail: commercial.warranty@toro.com

Owner Responsibilities

As the Product owner, you are responsible for required maintenance and adjustments stated in your *Operator's Manual*. Failure to perform required maintenance and adjustments can be grounds for disallowing a warranty claim.

Items and Conditions Not Covered

Not all product failures or malfunctions that occur during the warranty period are defects in materials or workmanship. This warranty does not cover the following:

- Product failures which result from the use of non-Toro replacement parts, or from installation and use of add-on, or modified non-Toro branded accessories and products. A separate warranty may be provided by the manufacturer of these items.
- Product failures which result from failure to perform recommended maintenance and/or adjustments. Failure to properly maintain your Toro product per the Recommended Maintenance listed in the *Operator's Manual* can result in claims for warranty being denied.
- Product failures which result from operating the Product in an abusive, negligent, or reckless manner.
- Parts subject to consumption through use unless found to be defective. Examples of parts which are consumed, or used up, during normal Product operation include, but are not limited to, brake pads and linings, clutch linings, blades, reels, rollers and bearings (sealed or greasable), bed knives, spark plugs, castor wheels and bearings, tires, filters, belts, and certain sprayer components such as diaphragms, nozzles, and check valves, etc.
- Failures caused by outside influence. Conditions considered to be outside influence include, but are not limited to, weather, storage practices, contamination, use of unapproved fuels, coolants, lubricants, additives, fertilizers, water, or chemicals, etc.
- Failure or performance issues due to the use of fuels (e.g. gasoline, diesel, or biodiesel) that do not conform to their respective industry standards.
- Normal noise, vibration, wear and tear, and deterioration.
- Normal "wear and tear" includes, but is not limited to, damage to seats due to wear or abrasion, worn painted surfaces, scratched decals or windows, etc.

Parts

Parts scheduled for replacement as required maintenance are warranted for the period of time up to the scheduled replacement time for that part. Parts replaced under this warranty are covered for the duration of the original product warranty and become the property of Toro. Toro will make the final decision whether to repair any existing part or assembly or replace it. Toro may use remanufactured parts for warranty repairs.

Deep Cycle and Lithium-Ion Battery Warranty:

Deep cycle and Lithium-Ion batteries have a specified total number of kilowatt-hours they can deliver during their lifetime. Operating, recharging, and maintenance techniques can extend or reduce total battery life. As the batteries in this product are consumed, the amount of useful work between charging intervals will slowly decrease until the battery is completely worn out. Replacement of worn out batteries, due to normal consumption, is the responsibility of the product owner. Battery replacement may be required during the normal product warranty period at owner's expense. Note: (Lithium-Ion battery only): A Lithium-Ion battery has a part only prorated warranty beginning year 3 through year 5 based on the time in service and kilowatt hours used. Refer to the *Operator's Manual* for additional information.

Maintenance is at Owner's Expense

Engine tune-up, lubrication, cleaning and polishing, replacement of filters, coolant, and completing recommended maintenance are some of the normal services Toro products require that are at the owner's expense.

General Conditions

Repair by an Authorized Toro Distributor or Dealer is your sole remedy under this warranty.

Neither The Toro Company nor Toro Warranty Company is liable for indirect, incidental or consequential damages in connection with the use of the Toro Products covered by this warranty, including any cost or expense of providing substitute equipment or service during reasonable periods of malfunction or non-use pending completion of repairs under this warranty. Except for the Emissions warranty referenced below, if applicable, there is no other express warranty. All implied warranties of merchantability and fitness for use are limited to the duration of this express warranty.

Some states do not allow exclusions of incidental or consequential damages, or limitations on how long an implied warranty lasts, so the above exclusions and limitations may not apply to you. This warranty gives you specific legal rights, and you may also have other rights which vary from state to state.

Note regarding engine warranty:

The Emissions Control System on your Product may be covered by a separate warranty meeting requirements established by the U.S. Environmental Protection Agency (EPA) and/or the California Air Resources Board (CARB). The hour limitations set forth above do not apply to the Emissions Control System Warranty. Refer to the Engine Emission Control Warranty Statement supplied with your product or contained in the engine manufacturer's documentation for details

Countries Other than the United States or Canada

Customers who have purchased Toro products exported from the United States or Canada should contact their Toro Distributor (Dealer) to obtain guarantee policies for your country, province, or state. If for any reason you are dissatisfied with your Distributor's service or have difficulty obtaining guarantee information, contact the Toro importer.

374-0253 Rev B