Form No. 3384-432 Rev B

Hopper Power Dump Kit

Dedicated-Bagging Riding Mower

Model No. 130-8458

Installation Instructions

⚠ WARNING

CALIFORNIA
Proposition 65 Warning

This product contains a chemical or chemicals known to the State of California to cause cancer, birth defects, or reproductive harm.

Installation

Note: Determine the left and right sides of the machine from the normal operating position.

Note: This kit fits several models, and may require drilling mounting holes. The more recent models are manufactured with some of the mounting holes already in place.

1

Preparing the Machine

No Parts Required

Procedure

Disconnect the battery by removing the bolt, nut, and washer that secures the terminal of the positive-battery cable to the positive post of the battery (Figure 1).

Note: Ensure that the terminal of the battery cable does not touch the post.

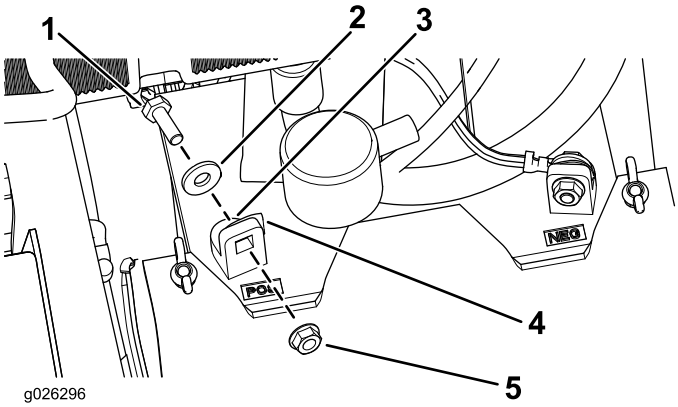

Figure 1

1. Bolt
2. Washer
3. Battery post
4. Terminal (positive-battery cable)
5. Nut

2

Installing the Rear-cam Bracket

Parts needed for this procedure:

1	Cam bracket
2	Carriage bolt (5/16 x 7/8 inch)
2	Flanged nyloc nut (5/16 inch)

Procedure

1. Ensure that all moving parts have stopped, the parking brake is engaged, and the key has been removed.

3384-432 B

2. Place the cam bracket on the left-hand rear frame, and align the upper, right hole, the inside cam bracket radius and the edges (Figure 2).

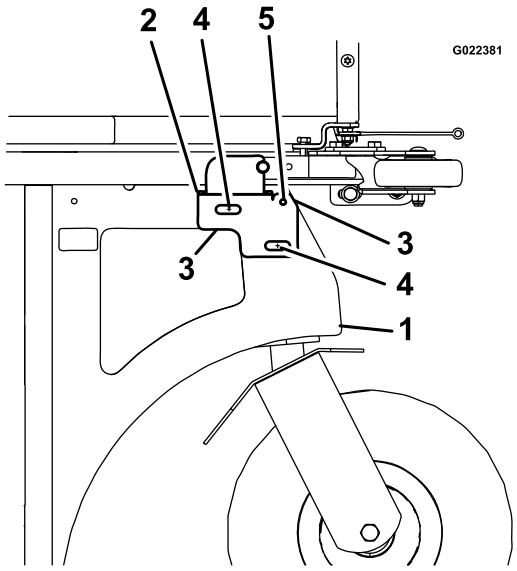

Figure 2

1. Left-hand rear frame
2. Cam bracket
3. Align edges
4. Drill holes
5. Upper right hole

3. Mark the center location of each slot and drill 8.4 mm (11/32 inch) diameter holes.
4. Secure the cam bracket to the frame using 2 carriage bolts (5/16 x 7/8 inch) and 2 flanged nyloc nuts (5/16 inch).

   Note: The 2 carriage bolts (5/16 x 7/8 inch) can only be installed from the outside of the bracket.

3

Drilling the Harness-clip Mounting Hole

Parts needed for this procedure:

1	Harness clip
1	Lower actuator-bracket assembly
3	Carriage bolt (5/16 x 7/8 inch)
3	Flanged nyloc nut (5/16 inch)

Procedure

1. Place the lower actuator-bracket assembly under the left rear frame and against the outer surface of the vertical leg (Figure 3).

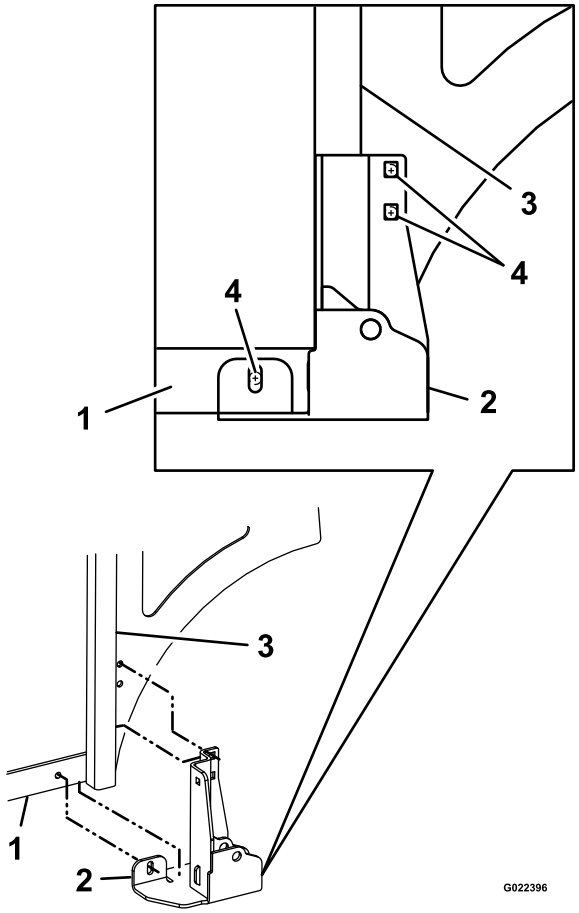

Figure 3

1. Left rear frame
2. Lower actuator-bracket assembly
3. Outer surface of the vertical leg
4. Align holes

2. Align the holes and install 3 carriage bolts (5/16 x 7/8 inch), and hand tighten 3 flanged nyloc nuts (5/16 inch) as shown in Figure 4.

   Note: If the holes do not exist in the frame, make sure that the bracket fits tight against the frame and mark the center locations, and drill 3 holes (8.4 mm or 11/32 inch diameter) as shown in Figure 3.

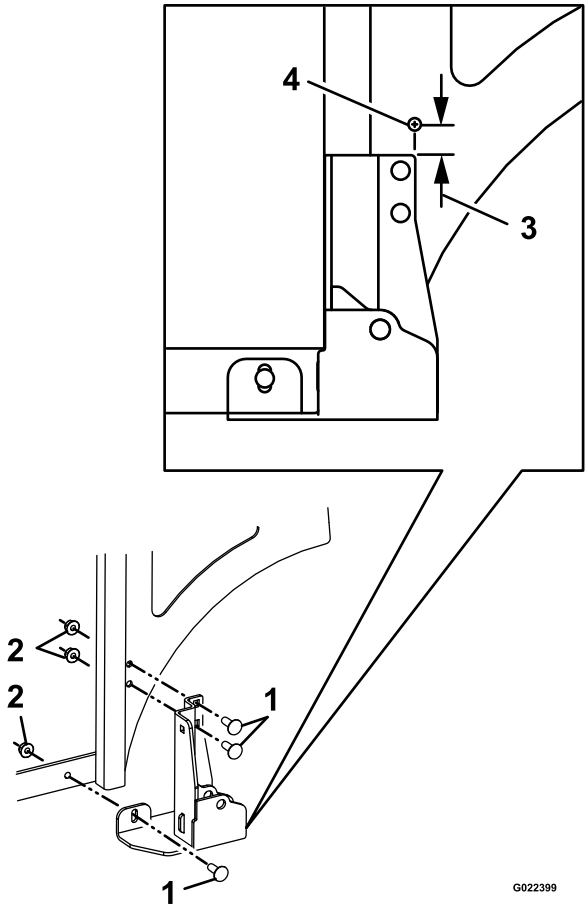

Figure 4

1. Carriage bolt (5/16 x 7/8 inch)
2. Flanged nyloc nut (5/16 inch)
3. 25 mm (1 inch) measurement
4. 6.4 mm (1/4 inch) diameter hole

3. Measure 25 mm (1 inch) above the top right edges of the lower actuator bracket, and drill 1 hole (6.4 mm or 1/4 inch diameter) through the frame (Figure 4).
4. Remove and retain the lower actuator-bracket assembly and its hardware.

4

Assembling the Cylinder and the Brackets

Parts needed for this procedure:

1	Heat-shield tube
2	Trim-lok
1	Actuator-link assembly
2	Clevis pin (5/16 x 1-49/64 inches)
2	Washer (5/16 inch)
1	Hopper-lift bracket
1	Spacer
4	Retaining ring
1	Carriage bolt (5/16 x 2 inches)
2	Flanged nyloc nut (5/16 inch)
1	Hopper-latch assembly
1	Hex-head screw (5/16 x 3 inches)
1	Actuator-shield bracket
1	Lower actuator-bracket assembly
1	Left hopper-retainer plate
1	Carriage bolt (5/16 x 2-1/4 inches)
1	Carriage bolt (5/16 x 7/8 inch)

Procedure

1. Install the heat-shield tube over the cylinder, and secure the heat-shield tube with the 2 pieces of Trim-lok (Figure 5).

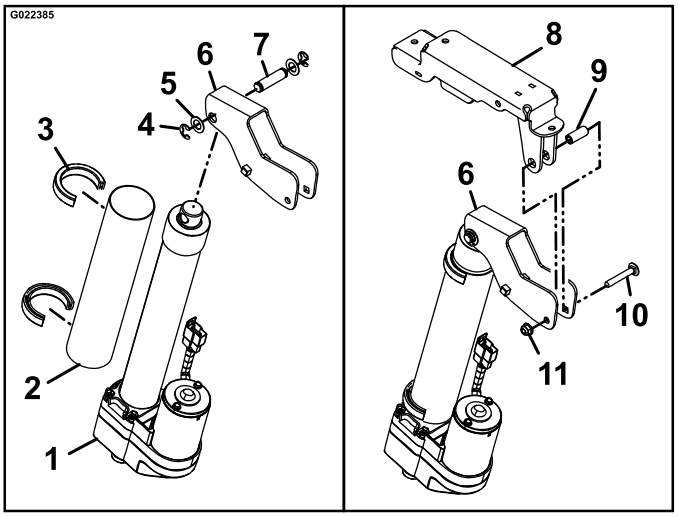

Figure 5

1. Cylinder
2. Heat-shield tube
3. Trim-lok
4. Retaining ring
5. Washer (5/16 inch)
6. Actuator-link assembly
7. Clevis pin (5/16 x 1-49/64 inches)
8. Hopper-lift bracket
9. Bushing spacer
10. Carriage bolt (5/16 x 2 inches)
11. Flanged nyloc nut (5/16 inch)

2. Align the actuator-link assembly hole with the top cylinder hole, and insert a clevis pin (5/16 x 1-49/64 inches) as shown in Figure 5.
3. Place a washer (5/16 inch) on each side of the actuator-link assembly, and secure it with the retaining rings.
4. Align the rear holes of the hopper-lift bracket with the actuator-link assembly.
5. Insert a bushing spacer as shown in Figure 5 and secure the assembly with a carriage bolt (5/16 x 2 inches) and a flanged nyloc nut (5/16 inch).
6. Raise the hopper-lift bracket, and place the hopper-latch assembly onto the actuator-link assembly (Figure 6).

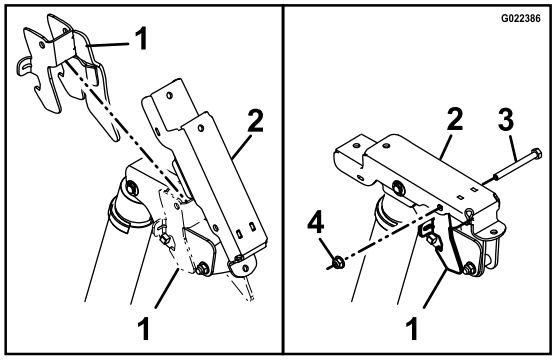

Figure 6

1. Hopper latch assembly
2. Hopper lift bracket
3. Hex-head screw (5/16 x 3 inches)
4. Flanged nyloc nut (5/16 inch)

7. Lower the hopper-lift bracket.
8. Align the holes in the hopper-latch assembly with the hopper-lift bracket, and secure it with a hex-head screw (5/16 x 3 inches) and a flanged nyloc nut (5/16 inch) as shown in Figure 6.
9. Align the lower actuator-bracket assembly hole with the bottom cylinder hole, and insert the clevis pin.
10. Place a washer on each side of the actuator-link assembly, and secure them with retaining rings.
11. Install the actuator-shield bracket onto the lower actuator-bracket assembly (Figure 7).

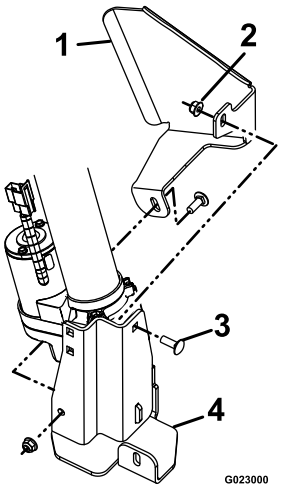

Figure 7

1. Actuator-shield bracket
2. Flanged nyloc nut (5/16 inch)
3. 5/16-18 x 7/8 inch screw
4. Actuator-bracket assembly

12. Mount the actuator assembly to the left rear frame, and hand-tighten the hardware.
13. Looking underneath, locate the rear hole in the hopper-lift-bracket assembly (Figure 8).

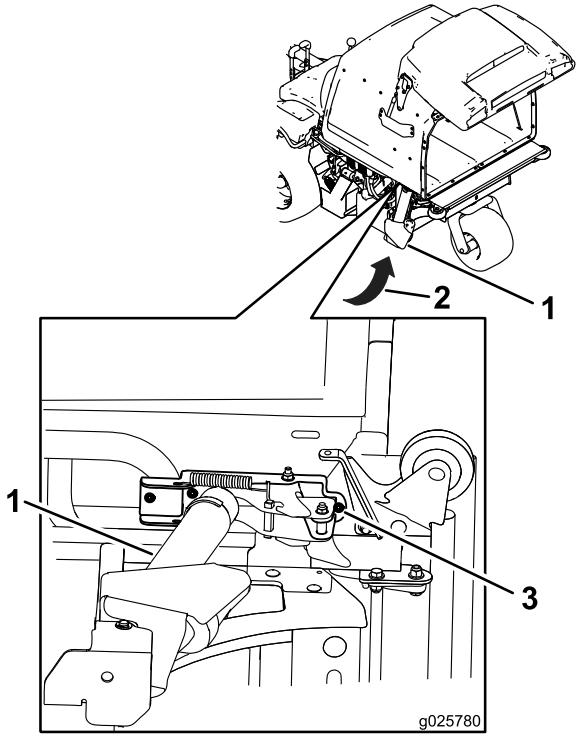

Figure 8

1. Actuator assembly
2. Underneath position
3. Rear hole in the hopper-lift-bracket assembly

14. Mark the hole location and remove the actuator assembly from the unit.
15. Drill a 8.4 mm (11/32 inch) diameter hole into the rear frame (Figure 8).
16. Install the actuator assembly using a hex-head screw (5/16 x 3/4 inch) and a flange nut (5/16 inch).
17. Open the hopper door.
18. Locate and drill two 8.4 mm (11/32 inch) diameter holes in the hopper for the hopper-retainer plate (Figure 9).

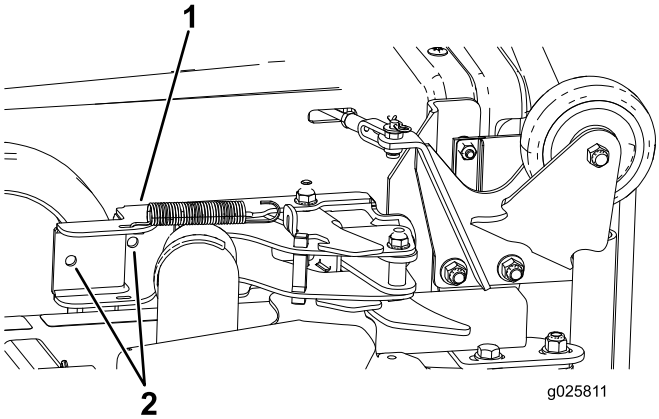

Figure 9

1. Hopper
2. Holes

19. Install the hopper-retainer plate inside the hopper using a carriage bolt (5/16 x 2-1/4 inches) and a carriage bolt (5/16 x 7/8 inch).

5

Installing the Door Arms and the Cables

Parts needed for this procedure:

2	Door arm
1	Spring-link plate
5	Truss screw (1/4 x 1 inch)
2	Roll pin (3/16 x 1-1/4 inches)
5	Serrated-flange nut (1/4 inch)
1	Extension spring
2	Hairpin cotter (1/4 inch)
4	Washer (1/4 inch)
2	Clevis pin (1/4 x 1 inch)
2	Cable guide
2	Yoke
2	Jam nut (1/4 inch)

Procedure

1. With the hopper door open, remove the screen from the hopper to avoid damage.
2. Mark and drill a 6.8 mm (9/32 inch) diameter hole through the hopper (Figure 10).

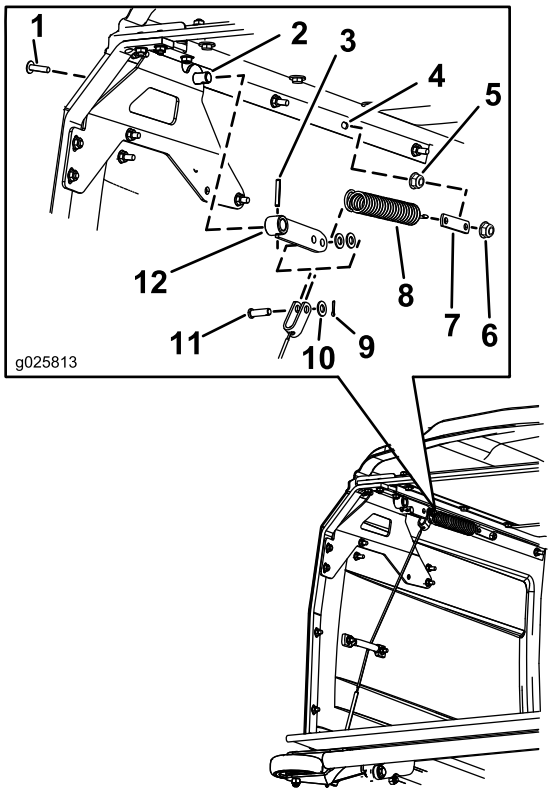

Figure 10

1.	Truss screw (1/4 x 1 inch)	7.	Spring-link plate
2.	Hinge shaft	8.	Spring
3.	Roll pin (3/16 x 1-1/4 inches)	9.	Cotter pin (3/32 x 1/2 inch)
4.	Drill hole	10.	Washer (5/16 inch)
5.	Serrated-flange nut (1/4 inch)	11.	Clevis pin (5/16 x 1-49/64)
6.	Locknut (1/4 inch)	12.	Door arm

3. Install the spring link plate using a truss screw (1/4 x 1 inch), a serrated-flange nut (1/4 inch), and a locknut (1/4 inch) as shown in Figure 10.
4. Slide the door arms onto the hinge shafts.

   Note: The roll pin (3/16 x 1-1/4 inches) hole is offset and will only install onto the hinge shaft in one orientation.
5. Drive the roll pins (3/16 x 1-1/4 inches) through the door arm weldments and the hinge shafts to secure.
6. If equipped, remove the fasteners on the left-hand and right-hand sides of the hopper.
7. If you have a Toro unit, use the existing holes in the hopper to locate the new holes, then drill holes in the side plates using a drill bit (5/16 inch) from the inside of the hopper (Figure 11).

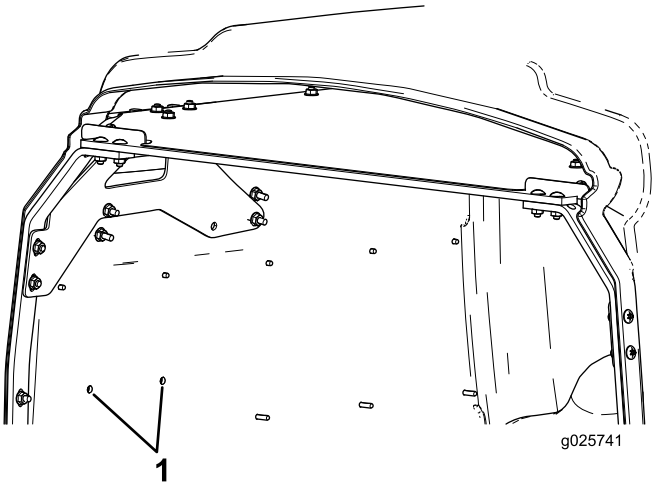

Figure 11

1. Holes

8. Using the truss screws (1/4 x 1 inch) and the serrated-flange nuts (1/4 inch), install the cable guides on the left and right side of the hopper (Figure 12).

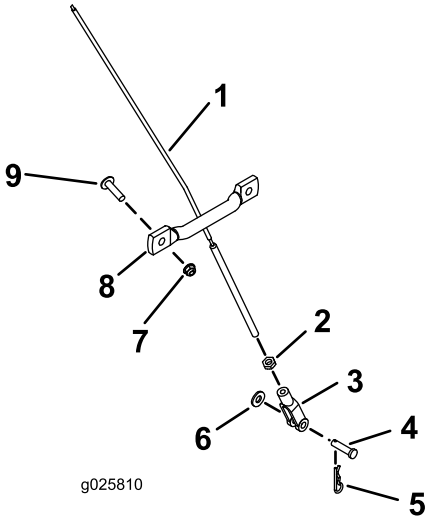

Figure 12

1.	Cable assembly	6.	Washer (1/4 inch)
2.	Jam nut (1/4 inch)	7.	Serrated-flange nut (1/4 inch)
3.	Yoke	8.	Cable guide
4.	Clevis pin (1/4 x 1 inch)	9.	Truss screw (1/4 x 1 inch)
5.	Hairpin cotter		

9. Route the cables through the cable guides and through the slots in the bottom of the hopper (Figure 13).

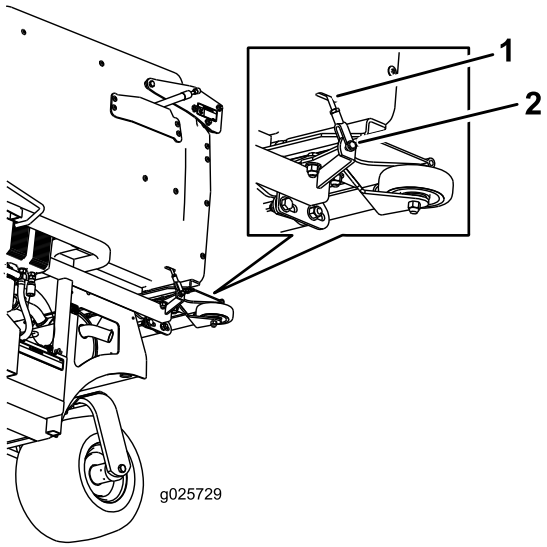

Figure 13

1. Route the cable through the slot in the hopper.
2. Fasten the yoke to the bracket.

---

10. Attach upper ends of cables to the door arm weldments using the washers (5/16 inch), clevis pins (5/16 x 1-49/64), and the cotter pins (3/32 x 1/2 inch) as shown in Figure 10.
11. Install the jam nuts (1/4 inch) and the yokes to bottom end of the cables (Figure 12).
12. Fasten the cables to the brackets on the frame using the clevis pins (1/4 x 1 inch), washers (1/4 inch), and hairpin cotters (1/4 inch) as shown in Figure 12.
13. On the left-hand side of the hopper, attach the spring to the link plate and door arm (Figure 10).
14. Install the screen and close the hopper door.

6

Adjusting the Hopper Door

No Parts Required

Procedure

1. Locate the hopper-door cables.
2. Loosen the jam nut next to the yoke at the end of the hopper-door cable/shaft assembly on each side, and rotate the shaft until the rear door has a clearance of 3.2 to 9.5 mm (1/8 to 3/8 inch) as shown in Figure 14.

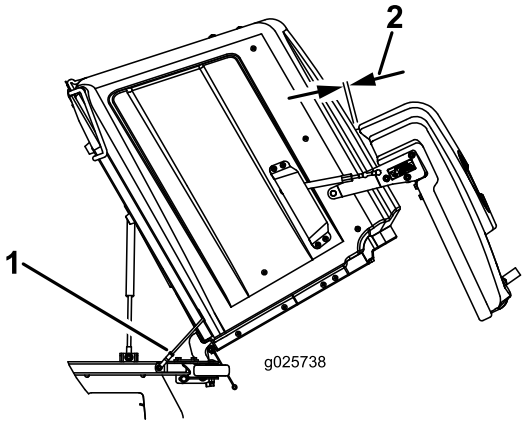

Figure 14

1. Jam nut
2. Gap of 3.2 to 9.5 mm (1/8 to 3/8 inch)

---

3. Ensure that the cables are pulled equally tight on each side.
4. Tighten the jam nuts against the yokes on each side.

7

Routing the Actuator Wiring Harness

Parts needed for this procedure:

1	Rocker switch (2013 models and newer)
1	Actuator wiring harness
1	Toggle switch (2012 models and older)
1	Toggle-switch boot (2012 models and older)
1	Connector (2012 models and older)
1	Actuator decal (2012 models and older)
5	Cable tie

Procedure

1. Lift up the hopper and the seat to gain access to the harness point connection.
2. Remove and retain the control panel and its hardware.
   - For 2013 machines and newer:
     A. Remove the rectangular plug from the control panel.
     B. Carefully install the rocker switch into the cutout area.
     C. Route the actuator wiring harness along the same path as the existing harness.
     D. Plug the actuator wiring harness into the rocker switch.
     E. Install the control panel.
   - For 2012 machines and older:
     A. Flip the control panel over.
     B. Cut and remove the decal material covering the 1/2 inch (13 mm) diameter opening.
     C. Remove and retain the switch bushing nut from the toggle switch.
     D. Insert the toggle switch into the underside of the console opening (Figure 15).

     Note: Orient the switch so that when the toggle switch is pulled rearward, it would lift the hopper.

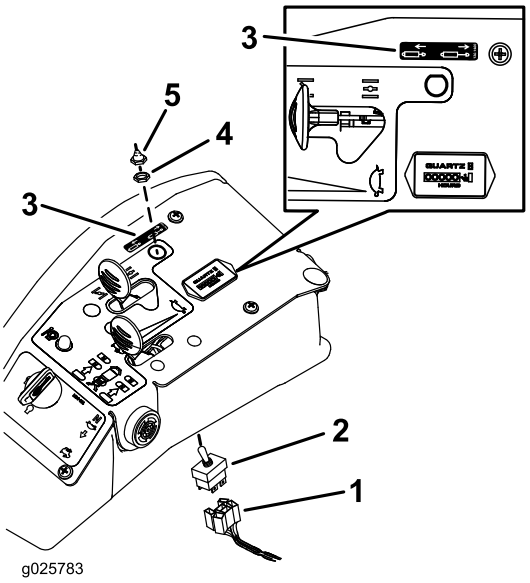

Figure 15

1. Connector from kit
2. Toggle switch
3. Decal
4. Switch bushing nut
5. Toggle-switch boot

     E. Install and tighten the switch bushing nut.
     F. Install the toggle-switch boot over the toggle switch.
     G. Using a small, flat-bladed tool, carefully remove each wire (noting the wire order) from the connector on the actuator wiring harness.
     H. Inspect the tang on each wire and slightly bend it upward.
     I. Using the same wire order, insert the wires into the new connector (Figure 16).

     Note: Make sure that the tangs lock into place for each terminal.

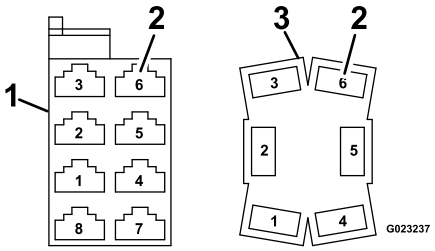

Figure 16

1. Actuator wiring-harness connector
2. Wire order
3. Connector

     J. Plug the actuator wiring harness into the toggle switch.
     K. Install the control panel.
     L. Clean the top surface of the control panel.
     M. Peel off the backing on the decal to expose the adhesive surface, and apply the decal to a

clean, dry surface next to the toggle switch, and smooth to remove any air bubbles (Figure 15).

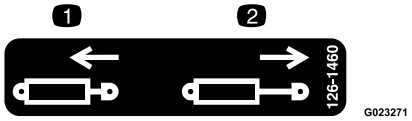

Figure 17

1. Retract the actuator
2. Extend the actuator

3. Connect the kit harness to machine harness with matching molded connector, located near the right rear of the seat or near the machine relays (Figure 18 or Figure 19).

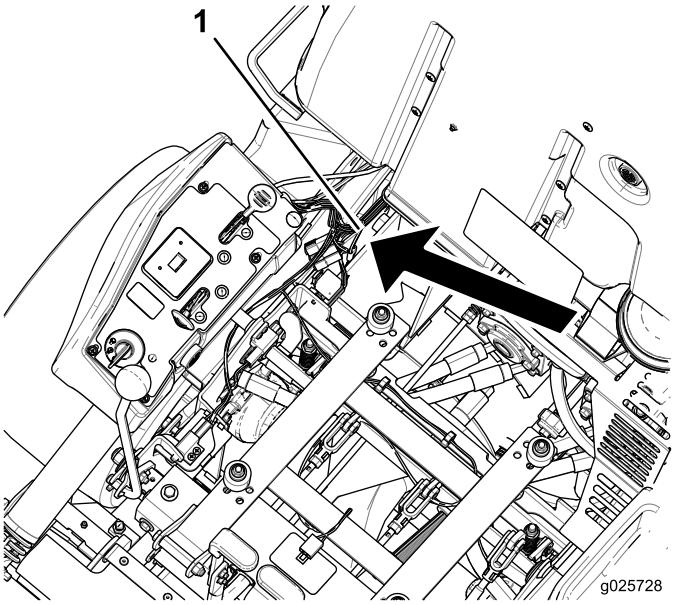

Figure 18

1. Molded connector

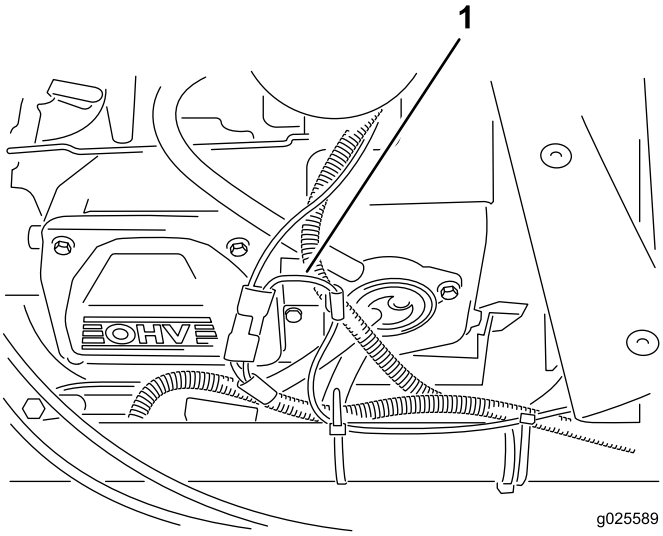

Figure 19

1. Location for harness connector

4. Route the wiring harness along the same path as the machine harness.
5. Plug the other end into the cylinder.
6. Secure the harness to the frame by inserting the harness clip into the hole drilled in step 3 of **Drilling the Harness-clip Mounting Hole**.
7. Use cable ties to coil and secure any of the excess wiring harness to the frame away from moving components (brake components, tires, etc.).
8. Connect the battery by installing the bolt, nut, and washer to secure the terminal of the positive battery cable to the positive battery post (Figure 1).

8

Adjusting the Cam Bracket

No Parts Required

Procedure

When the hopper is in the down position, adjust the cam bracket right or left, so the hopper-latch hook clears the square pin when the hopper is lifted manually.

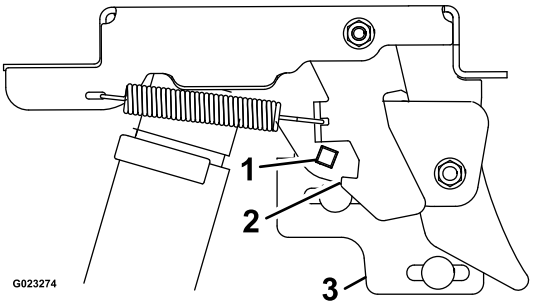

Figure 20

1. Square pin
2. Hopper-latch hook
3. Cam bracket

⚠ CAUTION

If the latch hook is not properly adjusted, the hopper will not release from the downward force of the actuator, and may cause injury.

Make sure that the hopper-latch hook clears the square pin when the hopper lifts manually from the down position.

Notes:

Notes: