1976

FORM NO. 3310-861

TORO®

MODEL NO. 20456-600001 & UP

OPERATOR'S MANUAL

21" GRASSMASTER™



Congratulations on your purchase of a GRASSMASTER mower by TORO. It's the finest rear bagging rotary mower available today, designed and built for high quality grass cutting performance.

To assure maximum safety, optimum performance, and to gain knowledge of the product, it is essential that you or any other operator of the mower read and understand the contents of this manual before the engine is ever started. Pay particular attention to the SAFETY INSTRUCTIONS highlighted by this symbol —

The symbol means CAUTION, WARNING or DANGER — personal safety instruction. Failure to comply with the instruction may result in personal injury.

PRICE $1.00

FOREWORD

The rear bagging GRASSMASTER rotary mower has advanced concepts in engineering, design, and safety; and if maintained properly, the mower will be reliable.

Since the GRASSMASTER is a high-quality product, Toro is concerned about the future use of the mower and the safety of the user. Therefore, read this manual to familiarize yourself with the safety instructions and the product before operating the mower. The five major sections of the manual are:

1. Safety Instructions
2. Setting Up Instructions
3. Preparation Before Starting
4. Operating Instructions
5. Maintenance

Note that safety, mechanical, and some general information in the manual is emphasized. The words CAUTION, WARNING, DANGER, IMPORTANT, and NOTE are used to classify the information. CAUTION, WARNING and DANGER identify safety related information, IMPORTANT identifies special mechanical information, and NOTE identifies general information worthy of special attention.

If help — concerning set-up, operation, maintenance, or safety of the mower — is ever needed, contact the local Authorized TORO Service Dealer or Distributor. Refer to the "Yellow Pages" for assistance. In addition to skilled service technicians, the dealer and distributor have other TORO Products, as well as factory approved accessories and replacement parts. Keep your Toro all TORO. Buy genuine TORO replacement parts and accessories.

TABLE OF CONTENTS

	Page
Safety Instructions	3
Safety Decals	4
Specifications	5
Loose Parts	5
Setting Up Instructions	6
Install Lower and Upper Handles	6
Install Control Panel	6
Assemble and Install Bag	6
Preparation Before Starting	7
Fill Crankcase With Oil	7
Fill Fuel Tank With Gasoline	7
Controls	8
Starting and Stopping Instructions	8
Starting Engine	8
Operating Instructions	9-12
Rear Safety Shield	9
Using Wash-Out Port	9
Adjusting Height-Of-Cut	9
Opening Rear Door	10
Mulching	10
Rear Bagging	11
Bagging Tips	12
Maintenance	13-18
Lubricating Wheel Bearings	13
Servicing Air Cleaner	13
Changing Crankcase Oil	14
Draining Gasoline	14
Replacing Spark Plug	15
Cleaning Mower Housing	15
Servicing Cutter Blade	16
Preparing Mower For Storage	17
Trouble Shooting	18-19
Identification and Ordering	Back Cover
The Toro Promise	Back Cover

COPYRIGHT 1976 BY
The Toro Company
MINNEAPOLIS, MINN. 55420 U.S.A.

SAFETY INSTRUCTIONS



This safety symbol means CAUTION, WARNING or DANGER – PERSONAL SAFETY INSTRUCTION. Read the instruction because it has to do with safety. Failure to comply with the instruction may result in personal injury.

The following instructions are comparable to the "Instructions for Safe Mowing" adopted by ANSI – American National Standards Institute. The GRASSMASTER is designed and tested to offer reasonably safe service, provided it is operated in strict accordance with the following Safety Instructions. Failure to comply with these instructions MAY RESULT IN PERSONAL INJURY.

BEFORE OPERATING

1. Operate the mower only after reading this manual. NEVER ALLOW CHILDREN TO OPERATE THE ROTARY MOWER.

2. Become familiar with the controls and know how to stop the engine quickly.

3. Keep everyone, especially children and pets away from the area of operation. Remove sticks, stones, wire, and any other debris from the turf area to be cut.

4. Keep all shields and safety devices in place. If a shield or safety device is defective or damaged, replace it before operating the mower. Also tighten loose nuts, bolts and screws.

5. Wear long pants and substantial shoes while using the mower. Do not operate the mower while bare foot, wearing sandals, tennis shoes, sneakers, or shorts.

6. If long grass will be cut, set height-of-cut in highest position. After mowing, reinspect the area and remove all debris. Then lower the height-of-cut and mow grass again.

7. Fill fuel tank with gasoline before starting the engine. Avoid spilling any gasoline.

   A. Use an approved gasoline container.

   B. Fill mower fuel tank outdoors. Engine must be cool and not running.

   C. Wipe up any gasoline that spilled, and install gasoline container cap and mower fuel tank cap before starting the engine.

WHILE OPERATING

8. Do not operate the mower if someone is near the turf area to be cut.

9. Cutting grass with a rotary mower demands attention. Always maintain secure footing, balance, and control.

10. Cut grass during the daytime or when there is adequate artificial light. Do not cut wet grass: cut grass when it is dry.

11. Cut grass slopes from side to side; not up and down. Avoid steep slopes.

12. Keep face, hands, feet, and any other part of the body or clothing away from concealed, moving, or rotating parts such as the cutter blade, wheels and engine. Stay behind the handle and away from the mower housing when engine is running.

13. When operating mower without the bag, rear discharge door must be closed. Shut engine off and wait for the blade to stop before removing the bagging assembly or unclogging the discharge chute. If chute must be unclogged, disconnect high tension wire from spark plug; then use a stick to remove the obstruction. Make sure high tension wire stays away from the plug to prevent possibility of accidental starting.

14. Since the blade rotates for a few seconds after key is turned to OFF, stay behind handles until engine and all moving parts stop.

15. If a solid object is hit by the blade or if mower vibrates abnormally, shut engine off immediately and wait for all moving parts to stop. Remove key from switch and disconnect high tension wire from spark plug. Keep wire away from plug to prevent possibility of accidental starting. Check mower for possible damage, bent blade, an obstruction, or loose part(s). Make all repairs before using the mower.

16. Do not adjust height-of-cut while engine is running.

17. If a gravel driveway, road, or side walk must be crossed, shut engine off so loose sand and rocks are not thrown.

18. Before leaving the operator's position – behind handle – shut engine off by rotating key to OFF; then wait for all moving parts to stop. DO NOT LEAVE OPERATOR'S POSITION WHILE ENGINE IS RUNNING.

19. Do not touch any part of the engine when it is running or shortly after it has stopped because engine is hot enough to cause a burn.

SAFETY INSTRUCTIONS

MAINTAINING MOWER

20. Before performing any maintenance or servicing mower, remove key from switch and disconnect high tension wire from spark plug. Make sure high tension wire stays away from the plug to prevent possibility of accidental starting.

21. When storing the mower, REMOVE KEY FROM SWITCH and store it in a memorable place.

22. Perform maintenance instructions described in this manual. If major repairs are ever needed or if assistance is desired, contact an Authorized TORO Service Dealer.

23. If mower must be tipped to perform maintenance or an adjustment, drain gasoline from fuel tank.

24. If a guard, safety device, or safety decal is damaged, replace it before operating the mower. Keep nuts, bolts, and screws tight, especially blade attaching bolt (45-60 ft-lb) and engine mounting bolts (14-18 ft-lb).

25. Check grass bag before each use to assure it is not torn or deteriorated. Replace a defective grass bag. Do not wash grass bag because the fabric may shrink, but most important, fabric may deteriorate.

26. To reduce possibility of fire, keep engine free of dirt, grease, leaves, and any other foreign buildup.

27. Allow engine to cool before storing mower in any building, and make sure the mower fuel tank is empty. Do not store mower near any open flame or where gasoline fumes may be ignited. Store gasoline in an approved – red – metal container. The mower and gasoline storage area must be cool and dry.

28. Do not overspeed engine. Recommended speed of the engine is 2400 rpm. To assure safety and accuracy, have an Authorized TORO Service Dealer check maximum engine speed (2400 rpm) with a tachometer.

29. At the time of manufacture, the GRASSMASTER conformed to safety standards in effect for rotary mowers. Therefore, to assure optimum performance and safety, always purchase genuine TORO replacement parts and accessories to keep the Toro all TORO. NEVER USE "WILL FIT" REPLACEMENT PARTS AND ACCESSORIES MADE BY OTHER MANUFACTURERS. Look for the TORO logo to assure genuineness.

Genuine
TORO®
PARTS & ACCESSORIES



SAFETY DECALS

Safety decals and instructions are easily visible to the operator and are located near any area of potential danger. Replace any decal that is damaged.

ON CONTROL PANEL

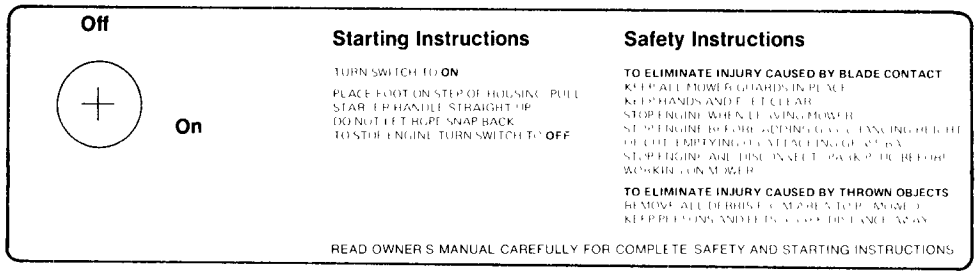

ON REAR DISCHARGE

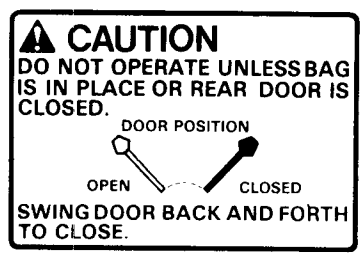

SPECIFICATIONS

12 Cubic Inch Tecumseh Engine: Model TNT 120, type 12003, four cycle, air cooled engine with output of 6.25 ft-lb of torque @ 2400 rpm. Fuel tank capacity is 1.3 quarts and crankcase capacity is 21 oz. Air cleaner is removable, servicable polyurethane type, and recoil starter is an easy-pull fingertip type.

Mower Housing: Die cast aluminum alloy housing has spiral grass chamber with rear bagging or mulching features. Width-of-cut is 21 inches.

Cutter Blade: Blade is 21 inches long and heat treated for hardness.

Blade Tip Speed: Tip speed is 13,195 ft/min @ 2400 engine rpm.

Handles: Two handles are 7/8 inch diameter, 16 gauge welded steel tubing with chrome plating. Handle is adjustable to one of three operating positions. An upright storage position is also available, and no tool is required to perform the adjustment. Handle can be folded for compact storage.

Wheels: Stamped steel wheels have two ball bearings with grease fittings for lubrication.

Tires: 8" x 1.75" semi-pneumatic tires have smooth tread.

Height-of-Cut: Height-of-cut is adjustable to one of five approximate settings: 1 inch; 1-1/2 inches; 2 inches; 2-1/2 inches; and 3 inches. A 5/8 inch setting is available on front wheels only.

Dimensions:

Overall width is 21-3/4 inches (approx).

Overall length without handle is 33-1/4 inches (approx).

Height without handle and wheels set at 1 inch is 14 inches (approx).

Weight: Dry weight of mower including bagging attachment is approximately 80 lb.

LOOSE PARTS

Note: Carefully remove mower and other parts from carton. Use chart below to assure all parts have been shipped.

PART	QTY.	USE
Lower Handle Hair Pin Cotter Upper Handle Curved-Head Bolt Knob	1 2 1 2 2	Install Lower and Upper Handles, page 6.
Self-Tapping Screw Cable Clamp	4 2	Install Control Panel, page 6.
Latch Cap Screw (1/4" - 20 x 1/2") Lock Nut (1/4 - 20)	1 2 2	Assemble and Install Bag, page 6.
Key (one spare)	2	Used in Starting Engine.
Owner's Manual	1	Read before operating mower.
Registration Card	1	Fill out card and send it to The Toro Company.

SETTING UP INSTRUCTIONS

INSTALL LOWER AND UPPER HANDLES

Tools Required: None

1. By pushing ends of lower handle together, install handle on pivot studs (Fig. 1). Retain handle on pivot pin with two large hair pin cotters (Fig. 1).

2. Move handle latch backward until handle studs snap into hole at end of latches (Fig. 1).

Note: If handle latch does not stay engaged with handle stud, bend latch outward; then install latch on stud.

3. The upper handle has studs on both ends that are used to retain handle in place by fitting into holes in lower handle. To attach upper handle to lower handle, pull ends outward and slide studs into holes in lower handle. Secure handles together with two curved-head bolts and handle knobs (Fig. 1). Knobs must be installed on inside of handles.

Note: Upper handle can be adjusted to one of three handle height positions. Select position most comfortable for operation.

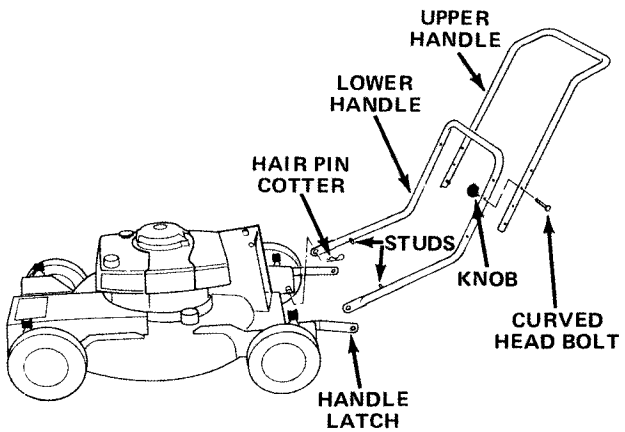

Figure 1

INSTALL CONTROL PANEL

Tools Required: Medium Blade Screwdriver

Note: Control panel must be installed so wire is behind the lower handle. This prevents interference with the bag frame.

1. Route control panel behind lower handle and install it against upper handle with four self-tapping screws (Fig. 2).

2. Secure wire to inside of upper and lower handles with two cable clamps (Fig. 2).

3. Push wire connector onto switch (Fig. 2).

Note: Key for switch is in loose parts bag. Do not insert key into switch, however, until engine is ready to be started.

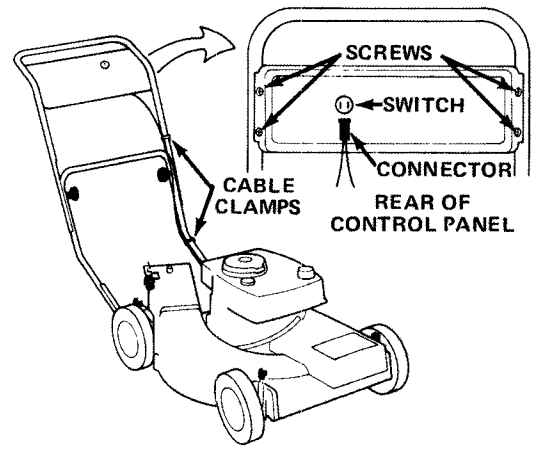

Figure 2

ASSEMBLE AND INSTALL BAG

Tools Required: Screwdriver and 7/16-Inch Wrench

1. Install bag latch on top of bag frame with two low-profile screws and lock nuts (Fig. 3). Nuts must be installed on top of latch. Tighten both lock nuts securely.

2. Close the grass bag door (Fig. 13). Top and side lips of door must fit outside the bag frame, not inside the frame.

3. Move rear door handle fully forward (Fig. 3). Slide guide hole in bag frame onto locating stud (Fig. 3), and set bag frame on lower handle.

4. Squeeze lockout lever (Fig. 3) until it disengages the latch; then move rear door handle (Fig. 3) fully to the rear until it locks in the notch. The door is now open fully.

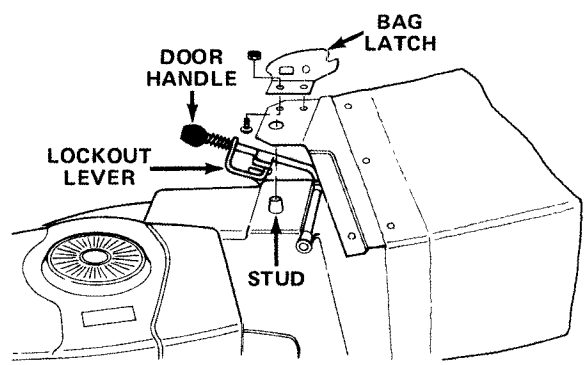

Figure 3

PREPARATION BEFORE STARTING

FILL CRANKCASE WITH OIL

Tools Required: Funnel and Clean Rag

1. Move mower to level surface to assure accurate oil level reading.

2. Clean area around oil dipstick so foreign matter cannot enter filler hole when dipstick is removed.

3. Remove dipstick (Fig. 4) by pulling it up.

4. Slowly, pour approximately 21 ounces of oil into filler hole (Fig. 4). The Tecumseh engine uses any high-quality detergent oil having the American Petroleum Institute – API – "service classification" MS, SC, SD, or SE. The recommended oil to use in the GRASSMASTER is **10W-30 or 10W40.**

5. Wipe end of dipstick. Next, push dipstick into filler neck. Make sure dipstick cap snaps into place to assure accurate oil level reading.

6. Pull dipstick out and check oil level. If level of oil is low, add enough oil to raise level to FULL mark (Fig. 4) on dipstick. DO NOT OVERFILL.

7. Push dipstick into filler neck and make sure cap snaps into place.

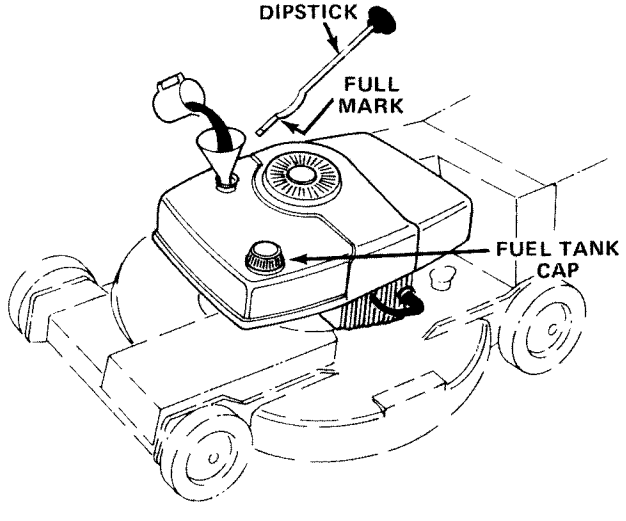

Figure 4

Note: Check level of oil every 5 operating hours or each time mower is used. Initially, change oil after the first 2 operating hours; thereafter, under normal conditions, change oil every 25 hours of operation. However, change oil more frequently when engine is operated in dusty or dirty conditions. If possible, run engine for about 3-5 minutes before changing oil because warm oil flows better and carries more contaminants than cold oil.

FILL FUEL TANK WITH GASOLINE

Tools Required: Clean Rag and Funnel

IMPORTANT: Do not mix oil w/gasoline because engine damage and poor performance may result. Do not use premium gas, white gas or gasoline additives. Unleaded regular gasoline is recommended to fill the 1.3 quart fuel tank, and leaded regular is an acceptable substitute.

CAUTION

Because gasoline is flammable, caution must be used when storing or handling it. Do not fill fuel tank while engine is running, hot or when unit is in an enclosed area. Keep away from open flame and electrical spark, and DO NOT SMOKE while filling the fuel tank to prevent the possibility of an explosion. Always fill fuel tank outside and wipe up any spilled gasoline before starting engine. Use a funnel or spout to prevent spilling gasoline, and fill fuel tank to about 1/2 inch from the top of the tank, not the filler neck.

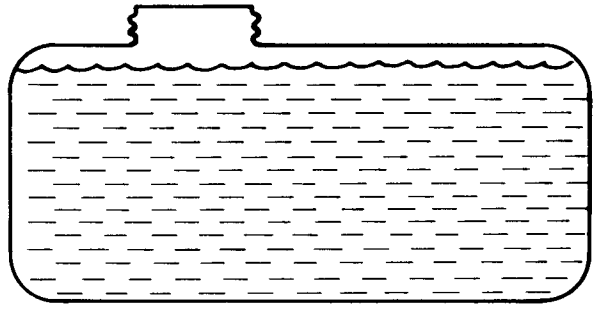

Store gasoline in a clean, approved container and keep the cap in place on the container. Keep gasoline in a cool, well-ventilated place; never in the house. To assure volatility, do not buy more than a 30 day supply of gasoline. Gasoline is a fuel for internal combustion engines; therefore, do not use it for any other purpose. Since many children like the smell of gasoline, keep it out of their reach because the fumes are explosive and dangerous to inhale.

1. Clean area around the fuel tank cap. Remove cap from fuel tank and fill tank to within 1/2 inch from the top with unleaded regular gasoline. Reinstall fuel tank cap.

Note: Unleaded regular gasoline reduces combustion deposits and extends valve life, and when available, this type of gasoline is recommended. Otherwise, use leaded-regular gasoline.

CONTROLS

Start Switch (Fig. 5) – Switch is used to start and stop the engine. Rotate key to ON position to allow engine to be started with the fingertip starter. Rotate key to OFF position to stop engine.

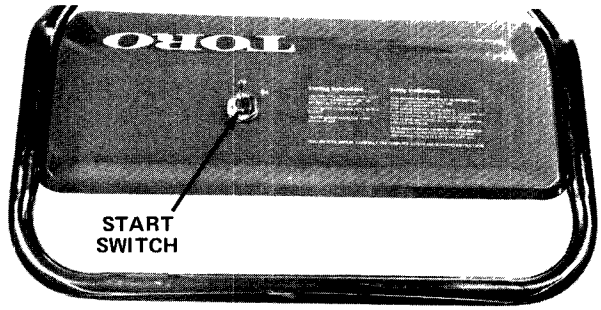

Figure 5

Recoil Starter (Fig. 6) – After key is turned to ON, pull fingertip starter to start engine.



Figure 6

STARTING/STOPPING INSTRUCTIONS

STARTING ENGINE

1. Push the high tension wire onto spark plug (Fig. 17).

2. Insert key into switch until it snaps in place (Fig. 5); then rotate key to ON position.

3. Put one foot on STEP at left side of mower housing and keep other foot from beneath the housing. Pull fingertip starter up until positive engagement results (Fig. 6); then pull vigorously to start the engine.

IMPORTANT: The carburetor has a prime-well that supplies an extra-rich charge of gasoline for starting the engine. If engine does not start after 2 or 3 pulls of the fingertip starter, wait about 10 seconds to allow prime-well to refill. Repeat this procedure until engine starts. Also, do not pull recoil rope to its limit or let go of fingertip starter when rope is pulled out, because starter mechanism or rope may break.

5. To stop engine, rotate key to OFF position (Fig. 5).

CAUTION

Since blade rotates for a few seconds after key is rotated to OFF position, stay behind the handle until engine, blade, and all moving parts stop. Stay away from discharge area, and do not get hands or feet close to mower housing. Contact with blade or another moving part will likely cause personal injury.

6. Pull high tension wire off spark plug (Fig. 17) and remove key from switch (Fig. 5) to prevent possibility of accidental starting when mower is unattended or not used.

OPERATING INSTRUCTIONS

REAR SAFETY SHIELD

CAUTION

The rear shield (Fig. 7) is a safety device; therefore, DO NOT REMOVE REAR SAFETY SHIELD FROM MOWER HOUSING. The shield protects the operator, pivots to ride over uneven turf, and does not affect mobility, even when backing up. If shield is ever damaged or does not operate properly, replace it. Without the shield mounted in place, debris or rocks could possibly be thrown rearward from under mower housing.

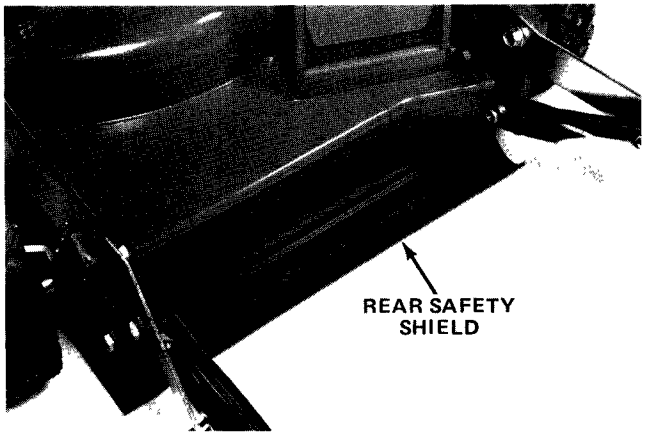

Figure 7

USING WASH-OUT PORT

After mower is used, underside of mower housing must be cleaned to prevent grass clippings from adhering to the housing. To clean underside of mower housing, use the wash-out port.

CAUTION

Before using the wash-out port, shut engine off, remove bagging attachment and make sure rear door is closed and latched securely. Also keep hands and feet from under housing. Contacting a moving part or being hit by discharged material can cause personal injury. Stay away from rear discharge opening.

1. After engine is shut off, set height-of-cut in the lowest position – shortest cut.

2. Open the wash-out port (Fig. 8).

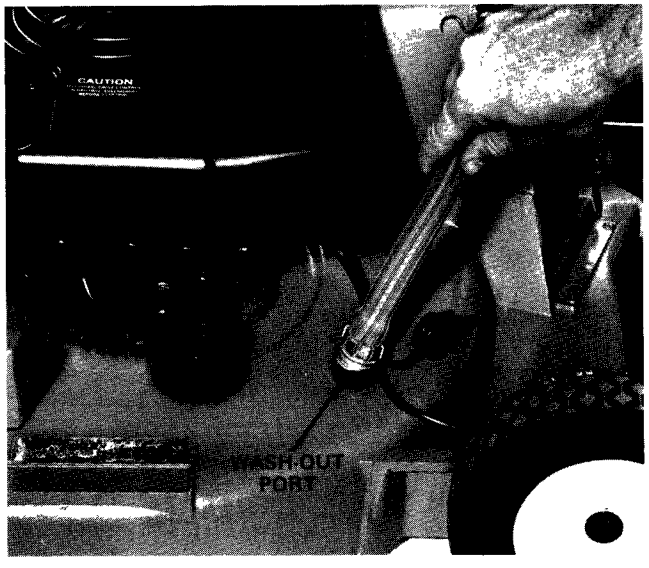

Figure 8

3. Rotate key to ON position and start engine. Using moderate water pressure, put end of hose without nozzle, into the wash-out port opening (Fig. 8). Allow the engine and water to run for approximately 2 minutes; then shut engine off. Pull high tension wire off spark plug after all moving parts stop.

Note: The action created by the rotating blade and water flushes accumulations of grass clippings from underside of mower housing. Dry, bulky accumulations of grass clippings must be cleaned with a scraper; refer to cleaning Mower Housing, page 15.

ADJUSTING HEIGHT-OF-CUT

The height-of-cut is adjustable to one of five approximate settings: 1 inch, 1-1/2 inches, 2 inches, 2-1/2 inches, or 3 inches. However, front wheels also have a 5/8 inch setting that can be used with the 1 inch rear wheel setting when cutting thatch grass.

Note: The five settings from 1 to 3 inches have letters to designate specific heights-of-cut. For normal cutting, set all four wheels at same letter.

CAUTION

Shut engine off before adjusting height-of-cut. Contact with blade or another moving part will likely cause personal injury.

1. Place thumb against inside of pivot arm and fingers against outside of wheel (Fig. 9).

OPERATING INSTRUCTIONS

2. Raise housing so wheel is off ground. Pull pivot arm out until its locating stud disengages notch in side of mower housing; then move pivot arm to desired setting and release locating stud into notch in mower housing.

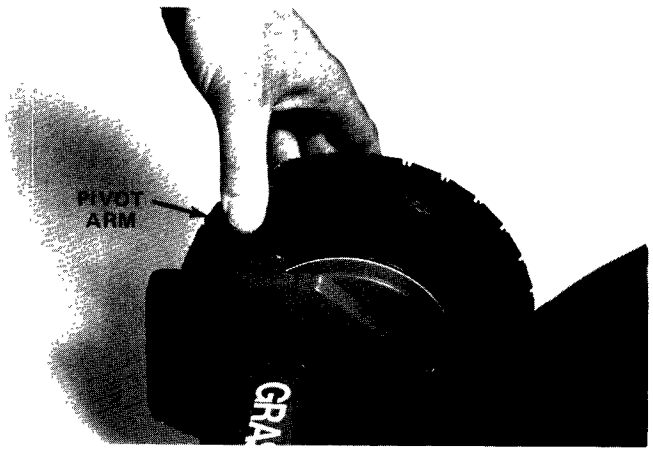

Figure 9

3. Adjust wheels to same height-of-cut (Fig. 10).

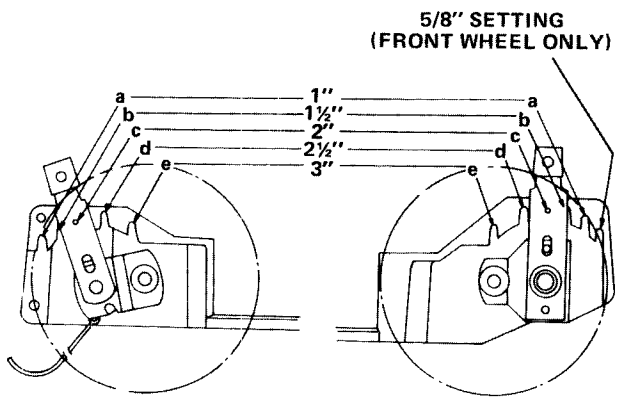

Figure 10

OPENING REAR DOOR

CAUTION

If mower is used for mulching, the rear door must be closed. Never open rear door when engine is running unless bagging attachment is installed, because contact with discharged material will likely cause personal injury.

1. Rotate key to OFF position.

CAUTION

Since blade rotates for a few seconds after engine is shut off, stay behind handle until engine, blade, and all moving parts stop. Keep hands and feet away from mower housing because contact with blade or another moving part will likely cause personal injury.

2. Squeeze lockout lever until it disengages the latch; then move rear door handle rearward into detent lock (Fig. 11). Door is now open fully.

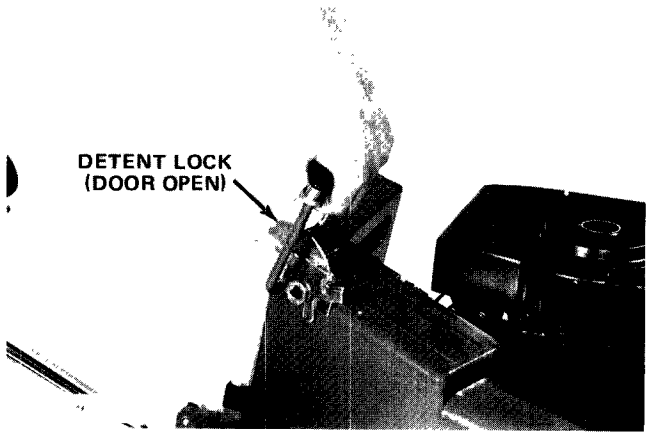

Figure 11

MULCHING

1. Shut engine off and wait for all moving parts to stop.

2. Pull high tension wire off spark plug to prevent possibility of accidental starting.

3. Lift up on lock-out lever and move rear door handle fully forward until door closes. (Fig. 11).

CAUTION

When mower is used for mulching, rear door must be closed. Never open rear door when engine is running because contact with blade or discharged material will likely cause personal injury.

OPERATING INSTRUCTIONS

Note: If desired, bag may remain on mower when mulching.

4. Grasp bag at rear and at door; then remove bag by lifting straight up (Fig. 12). Mower is ready for mulching.

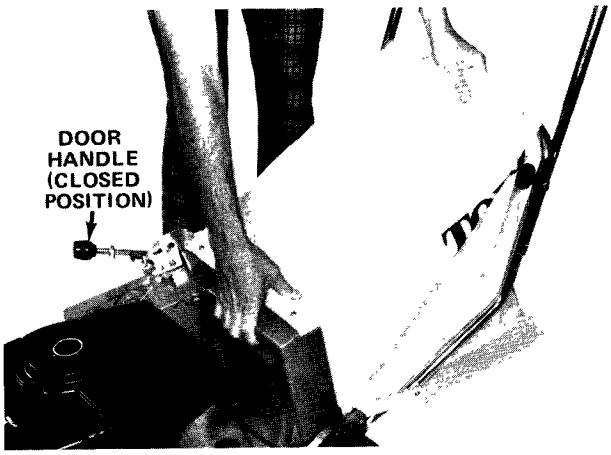

Figure 12

5. Push high tension wire onto spark plug so engine can be started.

REAR BAGGING

1. Close grass bag door. Top and side lips of door must fit outside the bag frame, not inside the frame (Fig. 13).

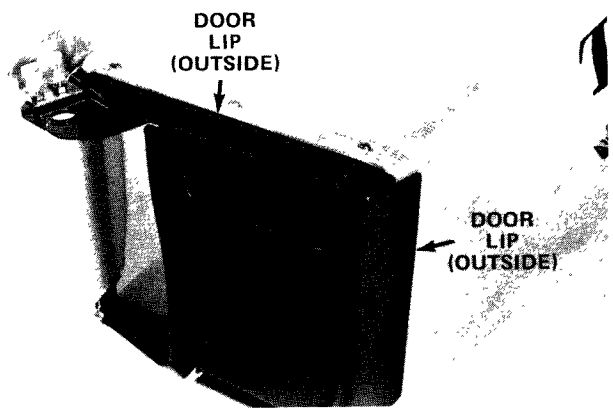

Figure 13

2. Squeeze lock-out lever and move rear door handle forward to assure door closes fully.

3. Slide guide hole in bag frame onto locating stud and set bag down on the lower handle (Fig. 14).

4. Move rear door handle fully to the rear until it locks in the notch (Fig. 14). Door is now open fully, and mower is ready to use.

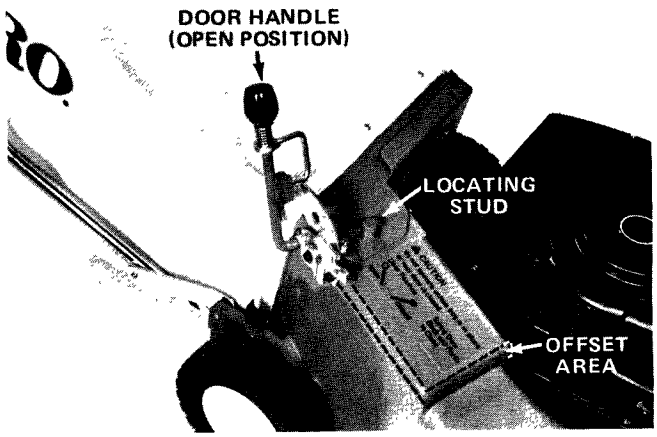

Figure 14

Note: Rear door must be open fully and into the offset area (Fig. 14) in the housing to prevent grass clippings from lodging above the door.

5. When bag must be emptied, shut engine off and wait for all moving parts to stop. Also move rear door handle forward until it is closed. Next, grasp bag at rear and at bag door (Fig. 12); then lift bag straight up so clippings stay in the bag rather than falling out the opening.

CAUTION

Since blade rotates for a few seconds after engine is shut off, stay behind handle and do not get hands or feet close to mower housing. Contact with blade or another moving part will cause personal injury.

IMPORTANT: If rear door of mower cannot be closed because grass clippings are clogging the discharge area, move rear door gently back and forth (Fig. 15). Do this until clippings are pushed into the bag and rear door can be closed completely. DO NOT FORCE REAR DOOR CLOSED because door or handle may be damaged by compacted grass in mower housing and discharge area.

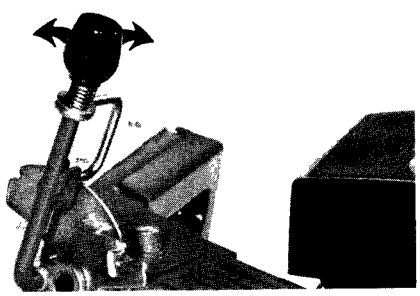

Figure 15

OPERATING INSTRUCTIONS

CAUTION

Rear door of mower must be closed when removing bag. Never open rear door when engine is running or grass bag is removed because contact with blade or discharged material will likely cause personal injury.

6. Open door at front of grass bag. While shaking the bag, gradually tip it forward so grass sifts out (Fig. 16). Do not try to dump all the grass at once.

7. Reinstall bag on mower by using steps 1-4.

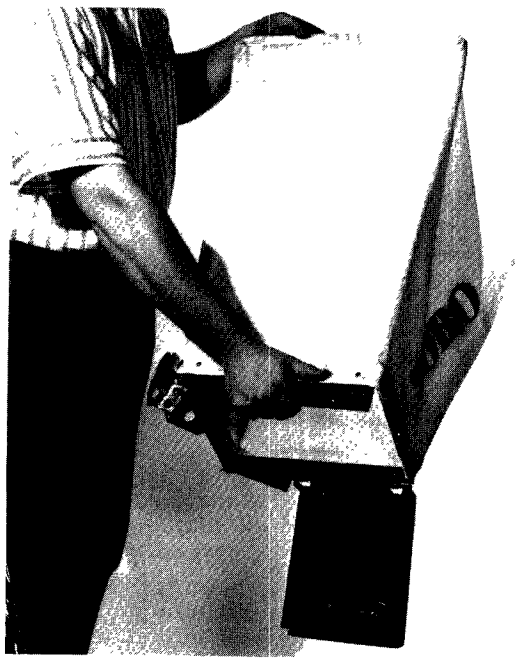

Figure 16

BAGGING TIPS

WARNING

The grass bag is made of material that will catch and contain the majority of foreign objects, such as small stones that may be thrown into it. However, under normal use, the bag material is subject to deterioration and wear; therefore, check bag frequently. If bag is defective, replace it with a genuine TORO bag that bears this Warning.

1. Always install bagging attachment before starting the engine. When removing or reinstalling bag, shut engine off.

2. Walk behind the mower; do not run.

3. Cut grass when it is dry and avoid cutting wet grass.

4. Cut long grass with height-of-cut at highest setting. Then cut grass again using lower setting.

5. Empty the bag often to reduce possibility of clogging mower housing and discharge area: refer to Rear Bagging, page 11.

MAINTENANCE

CAUTION

To prevent accidental starting of the engine while performing maintenance, shut engine off and pull high tension wire off spark plug (Fig. 17). Make sure wire does not touch plug accidentally.

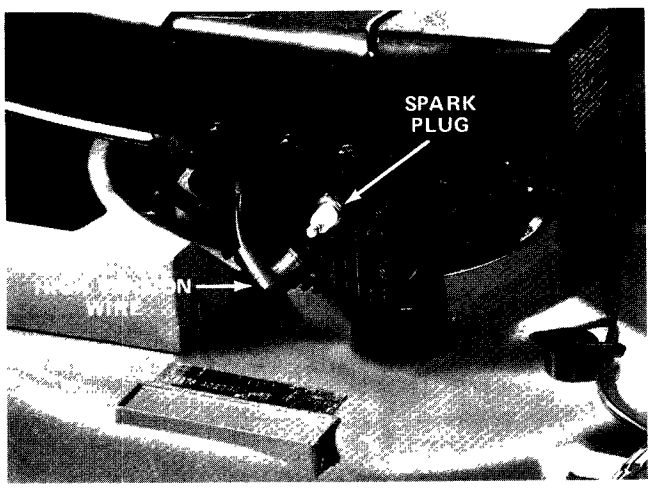

Figure 17

LUBRICATING WHEEL BEARINGS

Tools Required: Clean Rag and Grease Gun with No. 2 General Purpose Grease.

On outside of each wheel hub there is a grease fitting (Fig. 18) for lubricating the wheel bearings. After fitting is wiped clean, lubricate wheel bearings with No. 2 general purpose grease after every 25 hours of operation; however, lubricate bearings before each mowing when conditions are dusty or sandy.

Note: If wheels get wobbly because of bearing wear, either replace the wheel or have bearings, felt washers, and wave washers replaced.

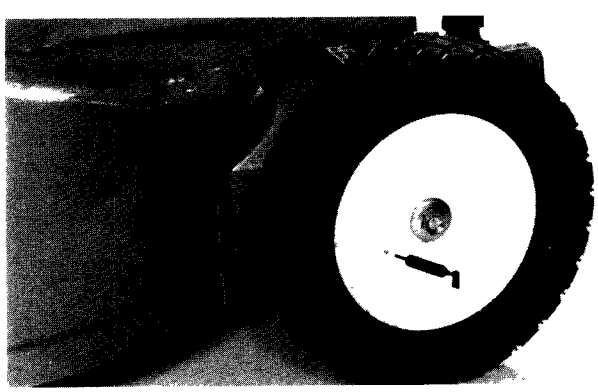

Figure 18

SERVICING AIR CLEANER

Tools Required: Solution of Liquid Soap Detergent and Water, Clean Rag, and Engine Oil

The air cleaner element must be cleaned after every 25 hours of engine operation if the engine is operated in clean air conditions. However, element must be cleaned more frequently when mower is operated in dusty or dirty conditions.

1. Make sure engine is shut off. Also pull high tension wire off spark plug.

2. Place fingers under cover and lift it up (Fig. 19). Clean cover if it is dirty.

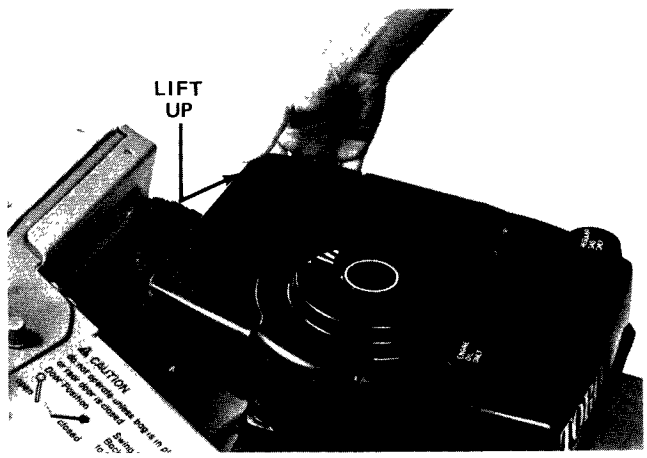

Figure 19

3. Look at top of air cleaner element (Fig. 20). If it is dirty, the element must be removed from air cleaner body (Fig. 20), then cleaned.

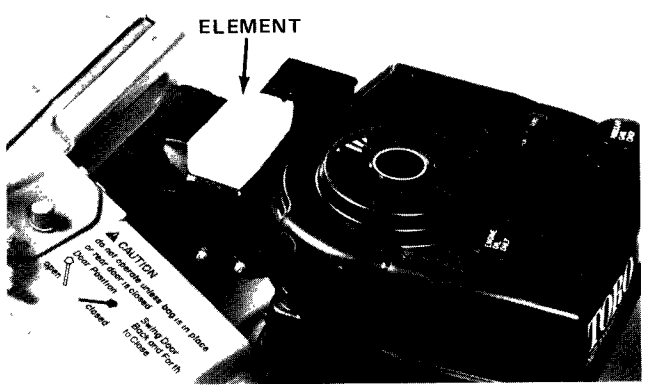

Figure 20

A. WASH element in a solution of liquid soap detergent and water. Squeeze the element to remove dirt. Do not twist element because it may tear.

B. DRY the element by wrapping it in a clean rag. Squeeze the rag and element until element is dry.

C. SATURATE the element with 5 teaspoons of 10W-40 oil; then squeeze it to distribute oil thoroughly. Also, squeeze element to remove excess oil. A damp element is desireable.

D. Place element into air cleaner body (Fig. 20).

4. Install cover on air cleaner body. Make sure cover snaps in place and is seated securely on air cleaner body.

IMPORTANT: Do not operate engine without air cleaner element because extreme engine wear and damage will likely result.

CHANGING CRANKCASE OIL

Tools Required: Clean Rag, Shallow Oil Drain Pan, Small Funnel, and 1/2-Inch Wrench

Change oil after the first 2 hours of engine operation; thereafter, change oil after 25 hours of engine operation. If possible, run engine just before changing oil because warm oil drains better and carries more contaminants than cold oil.

Note: Drain oil when fuel tank is empty to prevent spilling gasoline. Oil can be drained two ways: one way is out the bottom of the oil sump – steps 1-4 and 6 – and the other way is out the filler neck – steps 1, 5, and 6.

1. Make sure engine is shut off. Also pull high tension wire off spark plug.

CAUTION

Drain gasoline from fuel tank to prevent a potential hazard.

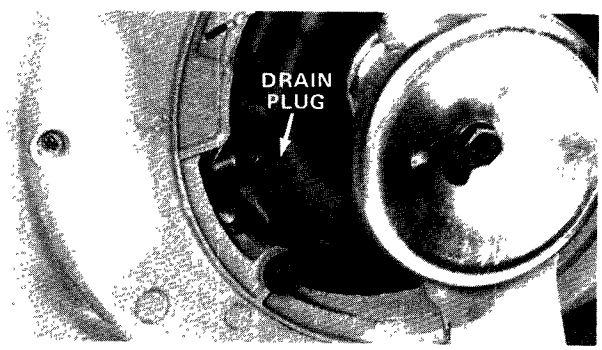

Figure 21

2. Tip mower on left – spark plug – side, and allow mower to remain in tipped position for a short time only. Avoid rotating blade when mower is tipped because starting problems may result.

3. Clean area around drain plug (Fig. 21). Remove drain plug and tip mower gradually back to its normal position so oil flows into drain pan.

4. After all oil is drained, tip mower on its left side and reinstall oil drain plug. Tip mower back to its normal position.

5. Remove dipstick from filler neck. Tip mower forward so all oil drains out filler neck and into drain pan (Fig. 22). Install dipstick in filler neck.

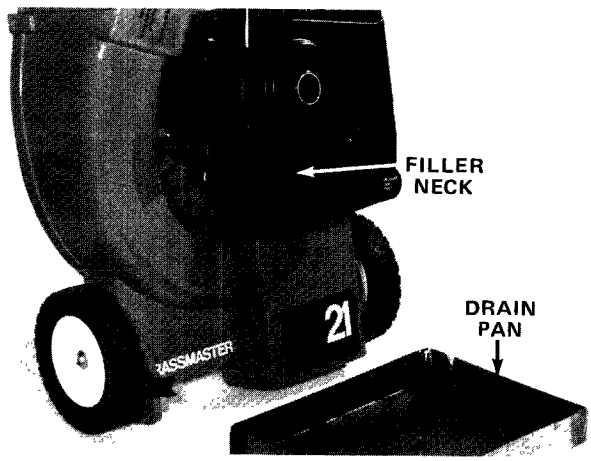

Figure 22

6. Move mower to a level surface. Fill crankcase with oil to FULL mark on dipstick: refer to Fill Crankcase With Oil, page 7.

DRAINING GASOLINE

Tools Required: Pliers and Shallow Drain Pan

1. Make sure engine is shut off. Also pull high tension wire off spark plug.

2. Place a clean, shallow drain pan below the fuel tank (Fig. 23).

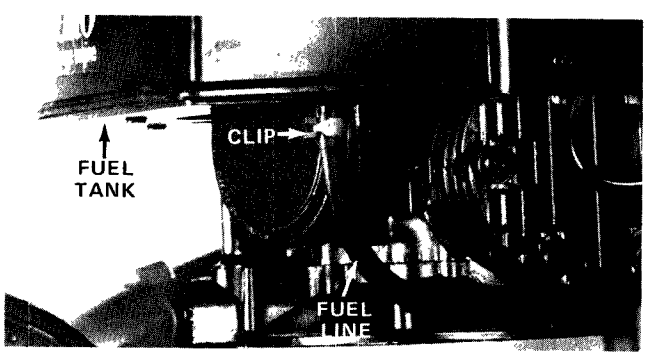

Figure 23

3. Compress clip holding fuel line on fuel tank fitting (Fig. 23); then slide clip down fuel line.

4. Carefully pull fuel line off fitting to allow gasoline to flow into drain pan.

5. When gasoline is drained, install fuel line on fuel tank fitting. Reinstall fuel line clip.

REPLACING SPARK PLUG

Tools Required: 3/4-Inch Spark Plug Socket, Spark Plug Gapping Tool, and Clean Rag

Recommended spark plug to use is a Champion CJ-8 or equivalent, and correct air gap is 0.030 of an inch. Since air gap between center and side electrodes of the spark plug increases gradually during normal engine operation, remove plug after every 25 hours of engine operation and check its condition.

1. Make sure engine is shut off. Also pull high tension wire off spark plug (Fig. 24).

2. Clean area around spark plug so foreign matter does not fall into cylinder when plug is removed. Remove plug from cylinder head (Fig. 24).

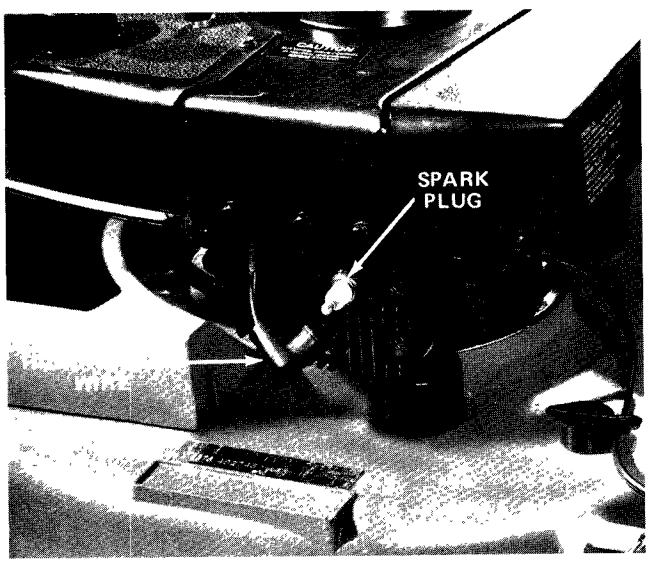

Figure 24

IMPORTANT: A cracked, fouled, or dirty spark plug must be replaced. Do not sand blast, scrape, or clean electrodes using a wire brush because grit may eventually release from the plug and fall into the cylinder. The result will likely be engine damage.

3. Set air gap between electrodes at 0.030 of an inch (Fig. 25). Next, install correctly gapped spark plug with gasket seal and tighten plug to 15 ft-lb. If torque wrench is not used, tighten plug firmly.

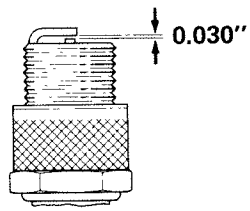

Figure 25

4. If mower will be used immediately, push high tension wire onto spark plug. However, do not install high tension wire if mower will not be used: accidental starting will be prevented.

CLEANING MOWER HOUSING

Tools Required: Wooden Scraper

To assure a good cut and efficient grass bagging, underside of mower housing and inside of discharge area must be kept clean.

1. Make sure engine is shut off. Also pull high tension wire off spark plug.

CAUTION

Drain gasoline from fuel tank to prevent a potential hazard.

2. Tip mower on left – spark plug – side, and allow mower to remain in tipped position for a short time only (Fig. 26). Avoid rotating blade when mower is tipped because starting problems may result.

3. Remove grass clippings and dirt that sticks to the housing by spraying with a garden hose. Scrape out any grass that water does not remove from housing; then spray housing again with water.

4. Set mower upright.

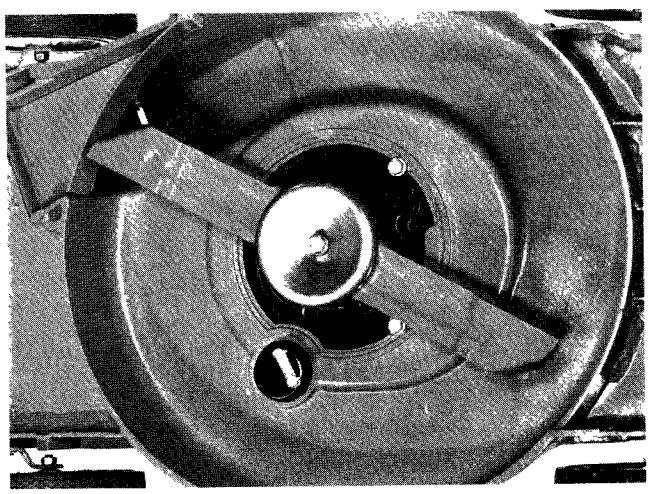

Figure 26

MAINTENANCE

SERVICING CUTTER BLADE

Tools Required: 5/8-Inch Socket or Wrench and Clean Rag

CAUTION

Check cutter blade before mower is used or stored and whenever mower is serviced. If bolt holding blade is loose, tighten it to 45-60 ft-lb. Carefully examine cutting ends of blade, especially where the flat and sail parts of the blade meet. When mowing in dry or sandy areas, sand and abrasive material can wear away the metal that joins the sail and flat part of the blade (Fig. 27A). For safety, it is important that when any wear is noticed (Fig. 27B), the blade is replaced. If the condition is not corrected and wear continues, a slot will form (Fig. 27C). Eventually a piece of the sail may break off and be thrown from under the housing, possibly resulting in serious injury to yourself or bystander.

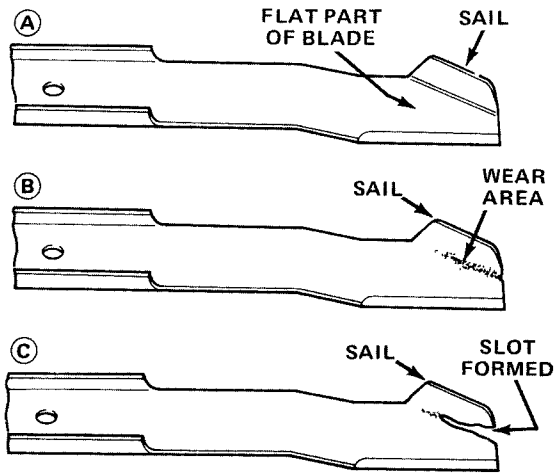

Figure 27

If the blade ever hits a solid object, replace it. Also replace the blade if it is bent or out-of-balance. Always use genuine TORO replacement blades to assure safety and optimum performance. NEVER USE "WILL-FIT" BLADES MADE BY OTHER MANUFACTURERS.

1. Make sure engine is shut off. Also pull high tension wire off spark plug.

2. Tip mower on left – spark plug – side, and allow mower to remain in tipped position for a short time only. Avoid rotating blade when mower is tipped because starting problems may result.

3. Grasp end of blade using a rag or thickly padded glove; then remove cap screw, lock washer, anti-scalp cup, and blade (Fig. 28).

Note: To assure optimum cutting performance, install a new blade at start of cutting season. During the year, file down small nicks to maintain the cutting edge.

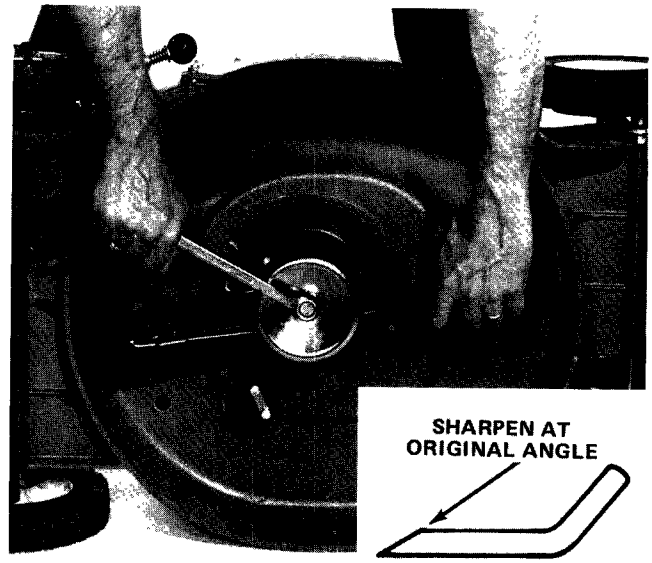

Figure 28

4. Using a file, sharpen cutting edge at both ends of blade (Fig. 28 Inset).

IMPORTANT: Sharpen top side of blade and maintain original cutting angle (Fig. 28 Inset) to assure a sharp cutting edge. The blade will remain balanced if same amount of material is removed from both cutting edges.

5. Check balance of blade by putting it on a blade balancer. A balanced blade will stay in horizontal position on the balancer. By contrast, a blade that is not balanced will settle to the heavy side. If blade is not balanced, file some metal off heavy "end" of the blade, not off the cutting edge. Next, check blade balance again.

Note: An inexpensive blade balancer can be purchased at a hardware store.

6. In sequence, install sharp, balanced blade, anti-scalp cup, lock washer and cap screw (Fig. 28). Tighten cap screw to 45-60 ft-lb.

7. Set mower upright. If mower will be used immediately, push high tension wire onto spark plug. However, do not install high tension wire if mower will not be used: accidental starting will be prevented.

MAINTENANCE

PREPARING MOWER FOR STORAGE

1. Drain gasoline from fuel tank and fuel line (Fig. 29): refer to Draining Gasoline, page 14. Next, start engine and let it run at idle speed until it stops because all gasoline is used.

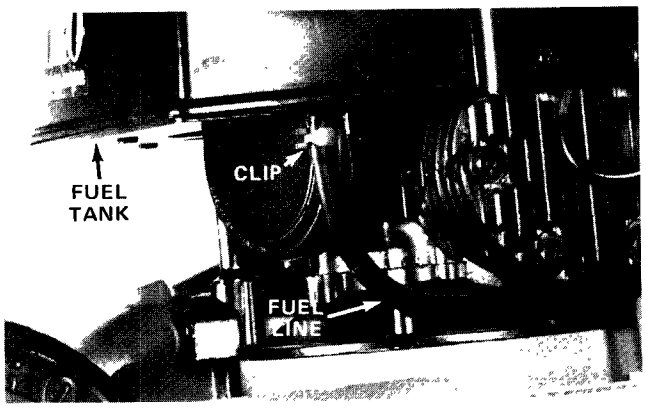

Figure 29

Note: All gasoline must be expended to prevent gum-like varnish deposits from forming in the carburetor, fuel line, and fuel tank. Such deposits, if allowed to form, will cause starting problems and poor engine operation.

2. Pull high tension wire off spark plug (Fig. 30) and clean area around the plug so foreign matter cannot fall into cylinder when plug is removed. Next, remove plug from cylinder head and pour two tablespoons of 10W-40 oil into spark plug hole. Pull recoil starter handle slowly to distribute oil on inside of cylinder. Then reinstall spark plug and tighten it to 15 ft-lb. If torque wrench is not used, tighten plug firmly. DO NOT INSTALL HIGH TENSION WIRE ON SPARK PLUG.

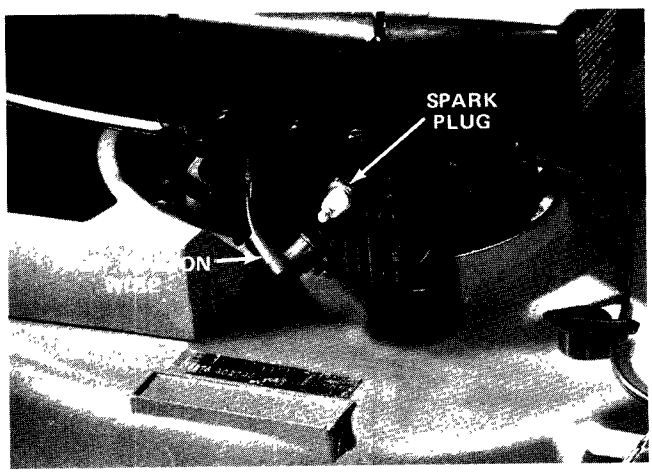

Figure 30

3. Drain oil from crankcase (Fig. 31): refer to Changing Crankcase Oil, steps 1-5, page 14. However, do not fill crankcase with oil at this time.

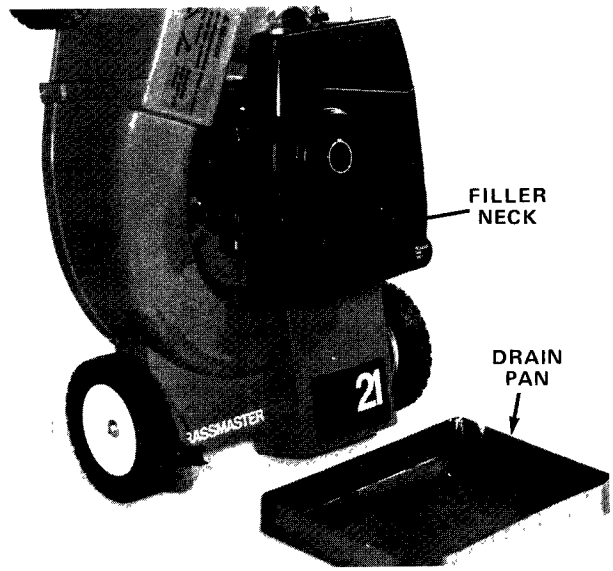

Figure 31

4. Clean dirt and chaff from outside of cylinder, cylinder head fins, and blower housing. Also, remove grass clippings, dirt, and grime from external parts of engine, shrouding, and top of mower housing.

5. Clean underside of mower housing (Fig. 32): refer to Cleaning Mower Housing, page 15.

6. Check condition of blade and blade capscrew (Fig. 32): refer to Servicing Cutter Blade, page 16.

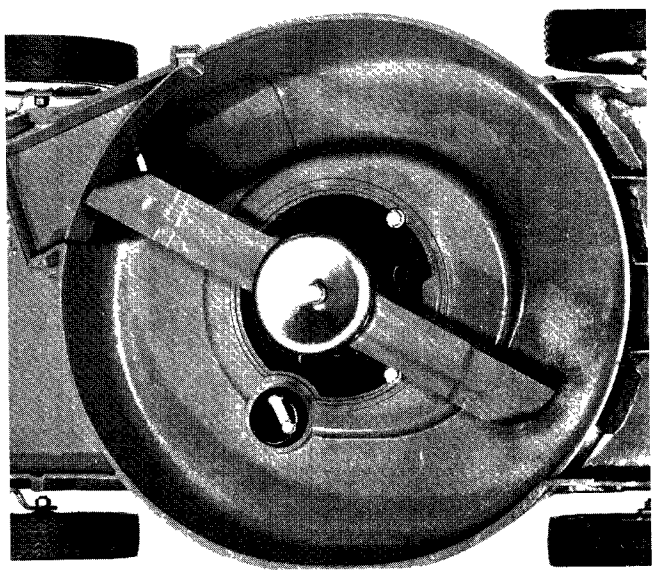

Figure 32

7. Check and tighten all cap screws, bolts, screws, nuts, and mating parts. If any part is damaged, repair or replace it.

8. Lubricate wheel bearings with grease (Fig. 33): refer to Lubricating Wheel Bearings, page 13.

MAINTENANCE

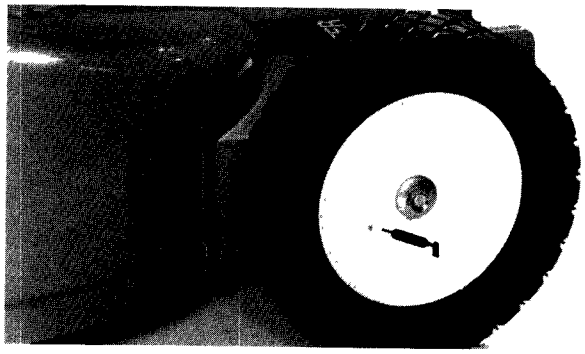

Figure 33

9. Wash air cleaner element in a liquid soap detergent and water (Fig. 34): refer to Servicing Air Cleaner, page 13.

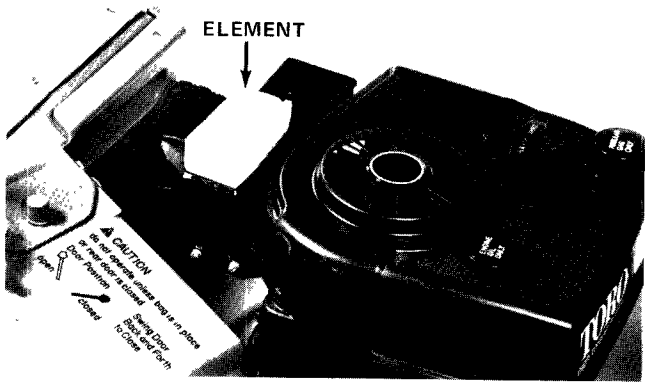

Figure 34

10. Fill crankcase with oil (Fig. 35): refer to Fill Crankcase With Oil, page 7.

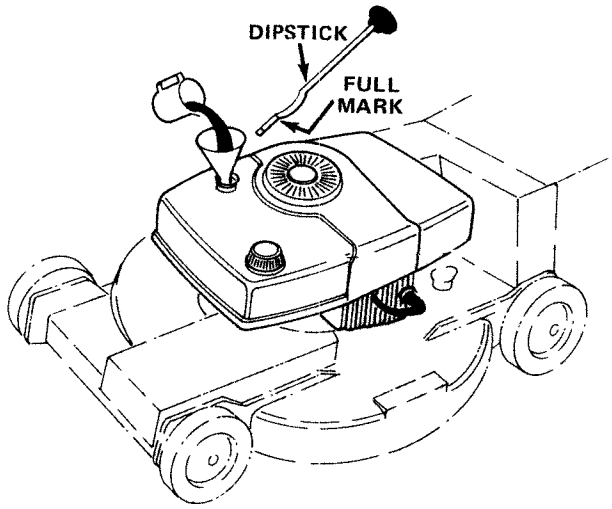

Figure 35

11. "Touch up" all rusted or chipped paint surfaces. Make sure to sand affected area before painting.

Note: TORO Re-Kote "touch-up" paint is available from any Authorized TORO Service Dealer. The spray paint dries in minutes to a glossy, factory-finish.

12. Store the mower in a clean, dry place. For convenience, handle can be folded for more compact storage. Cover the mower to protect it and keep it clean.

TROUBLE SHOOTING

Problem	Possible Causes	Corrective Action
Engine does not start.	1. Key not in ON position.	1. Turn key to ON.
	2. Gas tank is empty.	2. Fill fuel tank with gasoline: refer to Fill Fuel Tank With Gasoline, page 7.
	3. Spark plug loose.	3. Tighten spark plug to 15 ft-lb.
	4. High tension wire loose or disconnected from spark plug.	4. Install high tension wire on plug.
	5. Spark plug gap is incorrect.	5. Set gap between electrodes at 0.030 of an inch.
	6. Spark plug is defective.	6. Install new, correctly gapped plug: refer to Replacing Spark Plug, page 15.
	7. Blade bolt is loose.	7. Tighten blade bolt to 45-60 ft-lb.
	8. Faulty points or condenser.	8. Contact TORO Service Dealer.

TROUBLE SHOOTING

Problem	Possible Causes	Corrective Action
Engine starts hard or loses power.	1. Dirt or water in gas tank.	1. Drain gas and clean fuel tank. Fill tank with clean, fresh gasoline: refer to Fill Fuel Tank With Gasoline, page 7.
	2. Vent hole in fuel tank cap is plugged.	2. Clean or replace fuel tank cap.
	3. Air cleaner is dirty.	3. Clean the air cleaner element: refer to Servicing Air Cleaner, page 13.
	4. Blade bolt is loose.	4. Tighten blade bolt to 45-60 ft-lb.
Engine operates erratically.	1. Spark plug is defective.	1. Install new, correctly gapped, plug: refer to Replacing Spark Plug, page 15.
	2. Spark plug gapped incorrectly.	2. Set gap between electrodes at 0.030 of an inch.
	3. Air cleaner is dirty.	3. Clean the air cleaner element: refer to Servicing Air Cleaner, page 13.
Engine idles poorly.	1. Air cleaner is dirty.	1. Clean the air cleaner element: refer to Servicing Air Cleaner, page 13.
	2. Oil level in crankcase is low.	2. Add oil to crankcase: refer to Fill Crankcase With Oil, page 7.
	3. Air slots in engine shroud are plugged.	3. Remove obstruction from slots.
	4. Cooling fins and air passages under engine blower housing are plugged.	4. Remove obstruction from cooling fins and air passages.
Engine skips at high speed.	1. Air gap between electrodes of spark plug is too close.	1. Set air gap at 0.030 of an inch.
Engine overheats.	1. Cooling air flow is restricted.	1. Remove any obstruction from slots in shroud, blower housing, air passages, and cooling fins on engine.
	2. Oil level in crankcase is low.	2. Add oil to crankcase: refer to Fill Crankcase With Oil, page 7.
	3. Incorrect spark plug.	3. Install Champion CJ8 spark plug that is gapped at 0.030 of an inch.
Mower vibrates abnormally.	1. Blade bolt is loose.	1. Tighten blade bolt to 45-60 ft-lb.
	2. Cutter blade is unbalanced.	2. Sharpen cutter blade and check the balance: refer to Servicing Cutter Blade, page 16. Replace the blade if it cannot be balanced.

IDENTIFICATION AND ORDERING

MODEL AND SERIAL NUMBERS

The GRASSMASTER has two identification numbers: a model number and a serial number. The two numbers are stamped on a decal (Fig. 36) that is located on left side of the mower housing, near the step. In any correspondence concerning the mower, supply model and serial numbers to assure that correct information and replacement parts are obtained.

To order replacement parts from an Authorized TORO Service Dealer, supply the following information:

1. Model and serial numbers of the mower.

2. Part number, description, and quantity of part(s) desired.

Note: Do not order by reference number if a parts catalog is being used; use the PART NUMBER.

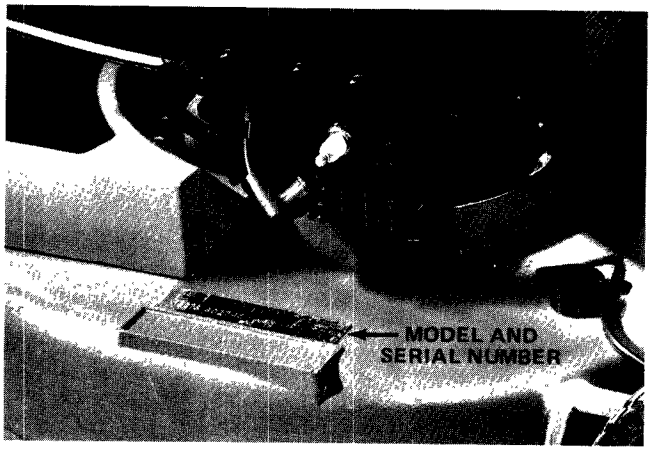

Figure 36

THE TORO PROMISE

It is Toro's policy to design and produce TORO products to provide our customers with a high level of performance and durability in normal operation. Our products, however, are produced in high volume, and it is inevitable that occasionally a unit will reach a customer with a defect in materials or workmanship which causes the unit to fall below the normal high level of TORO performance. Invariably, such a defect will be noticed in a residential product within one year after purchase. Recognizing this possibility, Toro has established a simple guarantee policy and procedure that is intended to assure customer satisfaction. This guarantee statement is as follows:

The Toro Promise

A Full One Year Warranty

The Toro Company promises to repair any TORO Product if defective in materials or workmanship. The following time periods from the date of purchase apply:

Residential Product . . . . . 1 year
Residential Products Used Commercially . . 45 days

The costs of parts and labor are included, but the customer pays the transportation costs. Just return any residential product to an Authorized TORO Service Dealer or TORO Distributor.

Should the customer feel that a product is defective and wish to rely on The Toro Promise, the following procedure is recommended:

1. Contact any Authorized TORO Service Dealer or Distributor, but preferably the dealer or distributor from whom you purchased the product.
2. He will instruct you to either return the product to him, or tell you the name and address of your nearest Authorized TORO Service Dealer or Distributor if the product is to be returned to such a dealer or distributor.
3. Bring the product and your original sales slip, or other evidence of purchase date, to the service dealer or distributor.
4. The servicing dealer or distributor will inspect the unit, advise you whether the product is defective and, if so, make all repairs necessary to correct the defect without extra charge to the customer.

If for any reason the customer is dissatisfied with the dealer's or distributor's analysis of the defect or the service he performs, he can contact us. Write:

TORO "Customer Care" Department
8111 Lyndale Avenue South
Minneapolis, Minnesota 55420

Litho in U S A