Form No. 3386-576 Rev A

TORO®

Count on it.

Parts Catalog

Reelmaster® 7000-D 4-Wheel Drive Traction Unit

Model No. 03780—Serial No. 315000001 and Up

Model No. 03780A—Serial No. 315000001 and Up

Register at www.Toro.com.
Original Instructions (EN)

CE

3386-576 A

Ordering Replacement Parts

To order replacement parts, please supply the part number, the quantity, and the description of each part desired.

Understanding Reference Numbers

Each identified part in an illustration has a reference number. The reference number for a part also appears in the parts list, along with other information about the part.

This catalog uses two special reference number formats, one to indicate parts in a service assembly and another to indicate the quantity of a given part in an illustration.

Service Assembly Reference Numbers

Parts in service assemblies have reference numbers in the form a:b. The a represents the reference number of the entire service assembly and the b represents a sequential number unique to each part within the service assembly.

For example, a wheel assembly might be identified by reference number 6, the tire by 6:1, the valve by 6:2, and the wheel by 6:3. When you order the assembly identified by reference number 6, you receive all parts identified by reference numbers 6:1,6:2, and 6:3. However, you may also order any part individually. Reference numbers of this type appear in illustration and in parts lists.

Reference Numbers Indicating Quantity

In an illustration, if a reference number indicates more than one part, the reference number has the form nX y. The n represents the quantity of the part, the X is the multiplication symbol, and the y represents the reference number.

For example, in an illustration, the reference number 2X 37 means that two of the parts identified by reference number 37 are indicated.

List of Abbreviations

AR: as required

ASM: assembly

BBC: blade brake control

BHTF: button head thread forming

CARR: carriage

CCW: counter clockwise

CW: clockwise

DEG: degrees

DPA: Dual Point Adjustment

ECM: electronic control module

EXT: external

FH: flat head

GA: gauge

HD: heavy-duty

HF: hex flange

HH: hex head

HHF: hex head flange

HHFTF: hex head flange thread forming

HJ: hex jam

HLH: hex lag head

HOC: height-of-cut

HP: high pressure

HSBH: hex socket button head

HSFH: hex socket flat head

HSH: hex socket head

HWH: hex washer head

HWHTF: hex washer head thread forming

HYD: hydraulic

LH: left hand

LP: low pressure

LPG: Liquefied Petroleum Gas

NI: nylon insert

NPTF: national pipe thread fine

PFH: phillips flat head

PPH: phillips pan head

PPHTF: phillips pan head thread forming

PRH: phillips round head

PTH: phillips truss head

PTO: power-take-off

RH: right hand

ROPS: roll-over protection system

RRB: rear roller brush

SFH: slotted fillister head

SHH: slotted hex head

SHWH: slotted hex washer head

SPH: slotted pan head

SQH: square head

SRH: slotted round head

STD: standard

TAP: self tapping

TTH: torx truss head

Contents

Frame and Roll-Over Protection System Assembly . . . 5
Front Frame Assembly No. 130-1617 . . . 6
Front Shroud, Headlight and Roller Assembly . . . 7
Engine and Flywheel Mounting Assembly . . . 8
Engine and Air Cleaner Assembly . . . 9
Air Cleaner Assembly No. 99-5410 . . . 11
Radiator Mounting Assembly . . . 12
Radiator and Fan Assembly . . . 13
Hydraulic Motor Assembly No. 117-4769 . . . 14
Front Reel Lift Assembly . . . 15
Gear Motor Assembly No. 115-8250 . . . 17
Hydraulic Cylinder Assembly No. 125-1660 . . . 18
Hydraulic Cylinder Assembly No. 125-1658 . . . 19
Rear Reel Lift Assembly . . . 20
Hydraulic Cylinder Assembly No. 125-1659 . . . 22
Hydraulic Tank Assembly . . . 23
Fuel System Assembly . . . 24
Battery and Storage Box Assembly . . . 25
Battery Storage Box Assembly No. 115-9100 . . . 26
Storage Box Assembly No. 115-9101 . . . 27
Seat Mount Assembly . . . 28
Vinyl Premium Seat Assembly No. 117-5676 . . . 29
Air Ride Seat Suspension Assembly No. 108-1488 . . . 30
Control Console Assembly . . . 32
Joystick Bracket Assembly No. 120-5280 . . . 33
Steering and Pedals Assembly . . . 34
Steering Tilt Column Assembly No. 106-3622 . . . 36
Steering Valve Assembly No. 114-8119 . . . 37
Forward/Reverse Pedal Assembly . . . 38
Hood Assembly . . . 39
Front Traction Assembly . . . 40
RH Brake Assembly No. 100-3069 . . . 41
LH Brake Assembly No. 100-3070 . . . 42
Planetary Assembly No. 105-4500-03 . . . 43
Hydraulic Piston Motor Assembly No. 121-3100 . . . 44
Rear Traction Assembly . . . 45
Steer Cylinder Assembly No. 119-3903 . . . 47
Bevel Pinion Shaft Assembly Rear Axle Assembly No. 110-4750 . . . 48
Differential Assembly Rear Axle Assembly No. 110-4750 . . . 49
Axle Support Assembly Rear Axle Assembly No. 110-4750 . . . 50
Bevel Gear Case Assembly Rear Axle Assembly No. 110-4750 . . . 51
Bevel Gear Shaft Assembly Rear Axle Assembly No. 110-4750 . . . 52
Axle Case Assembly Rear Axle Assembly No. 110-4750 . . . 53
Axle Assembly Rear Axle Assembly No. 110-4750 . . . 54
Piston Motor Assembly No. 121-3101 . . . 55
Hydraulic Pump Assembly . . . 56
Piston Pump Assembly No. 114-4188 . . . 57
Control Assembly No. 115-4446 . . . 59
Four Section Pump Assembly No. 114-4189 . . . 60
Hydraulic System Componets Assembly . . . 61
Mow Manifold Assembly No. 130-1656 . . . 63
Manifold Mow Block Assembly . . . 64
Lift Manifold Assembly No. 130-1669 . . . 65
Juction Manifold Assembly No. 130-1670 . . . 66

© 2014—The Toro® Company
8111 Lyndale Avenue South
Bloomington, MN 55420

Contact us at www.Toro.com.
Printed in the USA.
All Rights Reserved

Contents (continued)

Fan Drive Manifold Assembly No. 119-3943 . . . 67
3 Way Valve Manifold Assembly No. 121-3077 . . . 68
Rear Traction Manifold Assembly No. 121-3078 . . . 69
Traction Hydraulic Circuit Assembly . . . 70
Steering Hydraulic Circuit Assembly . . . 72
Fan Drive Hydraulic Circuit Assembly . . . 73
Lift Circuit Hydraulic Assembly . . . 74
Hydraulic Mow Circuit Assembly . . . 75
Front Mow Circuit Hydraulic Assembly . . . 76
Rear Hydraulic Mow Circuit Assembly . . . 77
Main Electrical Assembly . . . 78
Battery and Engine Electrical Assembly . . . 79
Cylinder Block Assembly . . . 80
Gear Housing Assembly . . . 81
Cylinder Head and Cover Assembly . . . 82
Flywheel Housing and Oil Sump Assembly . . . 84
Suction Manifold Assembly . . . 85
Diesel Particulate Filter Assembly . . . 86
Exhaust Manifold Assembly . . . 88
Camshaft and Driving Gear Assembly . . . 89
Turbine Assembly . . . 90
Crankshaft and Piston Assembly . . . 91
Lubrication and Oil System Assembly . . . 92
Lubrication Oil Line Assembly . . . 93
Cooling Water System Assembly . . . 94
Fuel System Assembly . . . 95
Fuel Injection Valve Assembly . . . 96
Fuel Line Assembly . . . 97
Starting Motor Assembly . . . 98
Generator Assembly . . . 99
Electric Parts Assembly . . . 100
Gasket Set . . . 101
Attachments and Accessories . . . 103

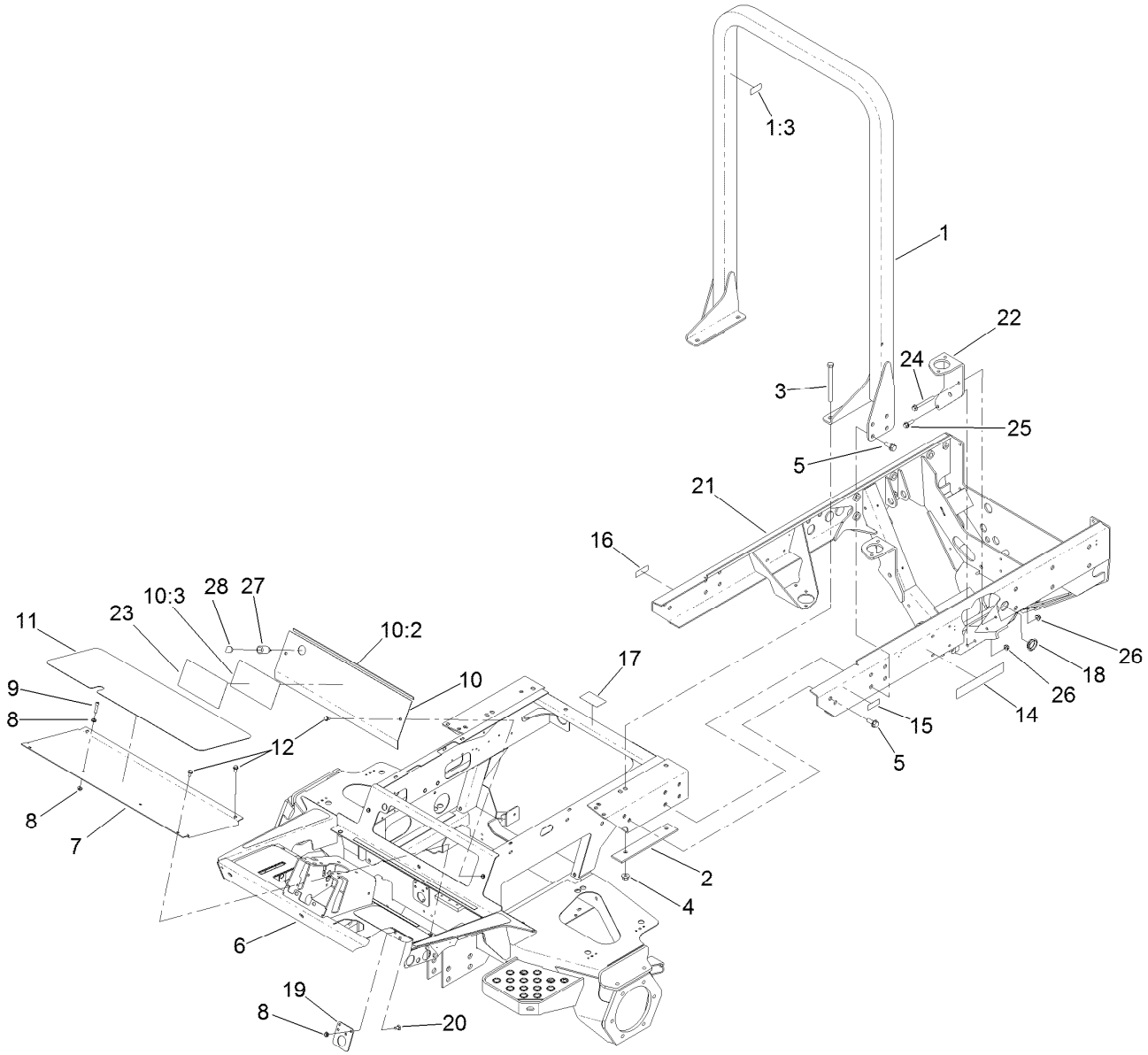

Frame and Roll-Over Protection System Assembly

Ref.	Part Number	Qty.	Description
1	108-4018	1	ROPS ASM
1:3	98-4387	1	Decal-Protection, Ear
2	104-5584-03	2	Plate-Reinforcement, ROPS
3	325-20	4	Screw-HH
4	32128-49	4	Nut-HHF
5	3234-38	12	Screw-HHF
6	130-1617	1	Front Frame ASM
7	75-1410-01	1	Plate-Access, Floor
8	32128-20	4	Nut-HF
9	3274-18	1	Screw-HSH
10	130-1659	1	Access Plate ASM
10:2	105-9860	2	Seal-Foam
10:3	120-1683	1	Decal-Danger
11	75-0630	1	Tread-Foot, Center
12	3234-7	6	Screw-HHF

Ref.	Part Number	Qty.	Description
14	72-3560	2	Decal
15	93-6680	1	Decal-Diesel
16	93-6686	1	Decal-Oil, HYD
17	100-6574	1	Decal-Warning
18	105-9194	4	Plug
19	104-5516-01	1	Support-Tube
20	3230-23	2	Screw-CARR
21	130-1601-03	1	Rear Frame ASM
22	130-1632-03	1	Bracket-Engine Mount
23	120-1686	1	Decal-Danger, Ce
24	116-4701	1	Screw-HHF
25	3234-24	1	Screw-HHF
26	104-8301	2	Nut-Flange, NI
27	99-7411	1	Point-Power
28	99-7416	1	Cap

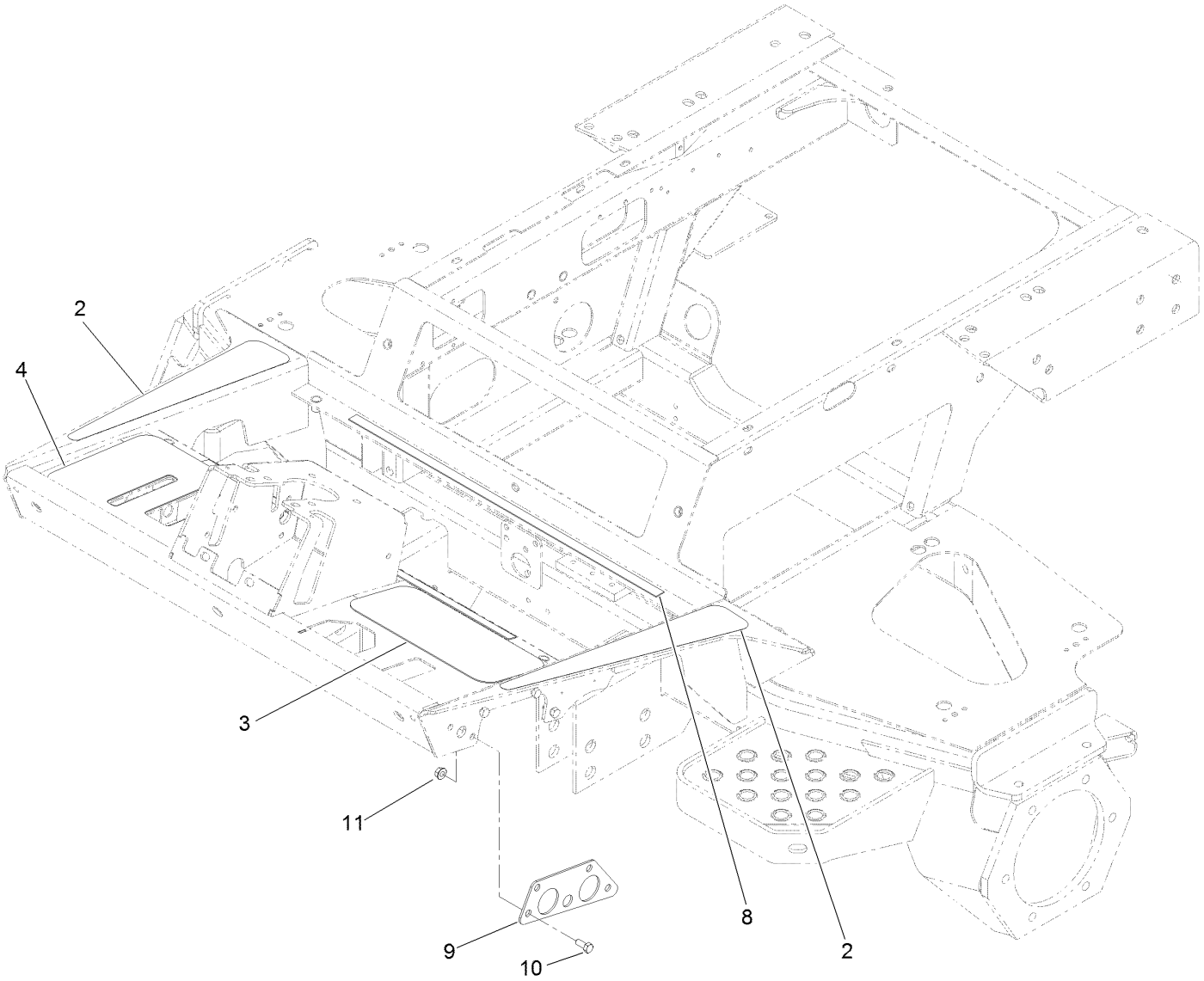

Front Frame Assembly No. 130-1617

Ref.	*Part Number*	*Qty.*	*Description*
2	93-7592	2	Tread-Rest, Foot
3	75-0620	1	Tread-Foot, LH
4	119-1497	1	Tread-Foot, RH
8	105-9860	2	Seal-Foam
9	106-7794-01	2	Plate-Mount, HYD Fitting
10	322-3	8	Screw-HH
11	32128-20	8	Nut-HF

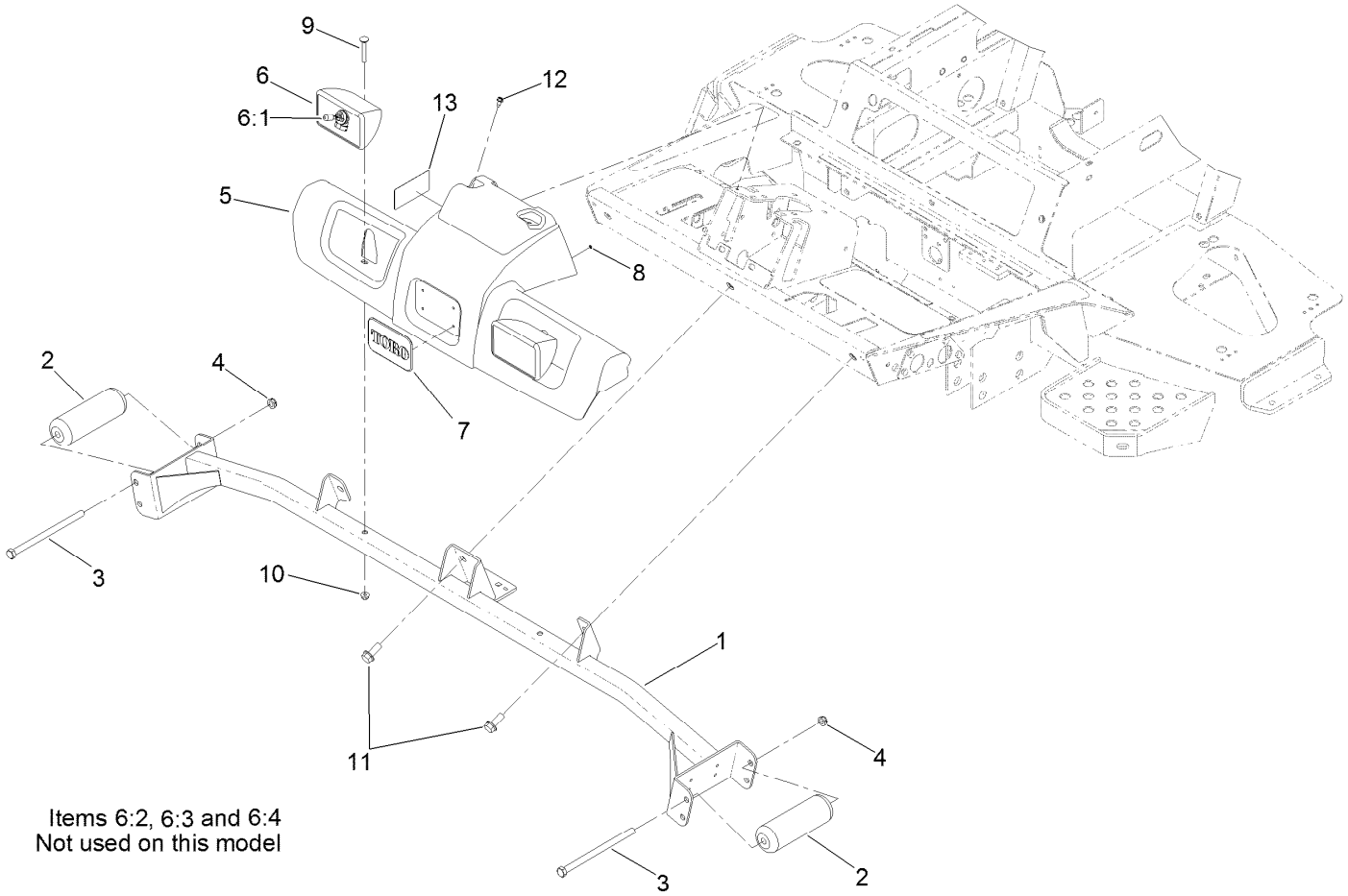

Front Shroud, Headlight and Roller Assembly

Ref.	Part Number	Qty.	Description
1	125-1663-01	1	Support-Roller
2	31-0750	2	Roller-Front
3	325-42	2	Screw-HH
4	3296-45	2	Nut-Lock, NI
5	115-9137	1	Shroud-Platform
6	94-9024	2	Lamp ASM
6:1	95-0909	1	Lamp-12 Volt
6:2	3230-28	1	Screw-CARR
6:3	3253-33	1	Washer-Lock

Ref.	Part Number	Qty.	Description
6:4	3217-6	1	Nut-Hex
7	93-6028	1	Plate-Logo
8	3254-9	4	Washer-Lock, Internal
9	3230-7	2	Bolt-CARR
10	104-8300	2	Nut-Flange, NI
11	3234-38	3	Screw-HHF
12	32104-17	2	Screw-HWH
13	120-1670	1	Decal-Mow Speed

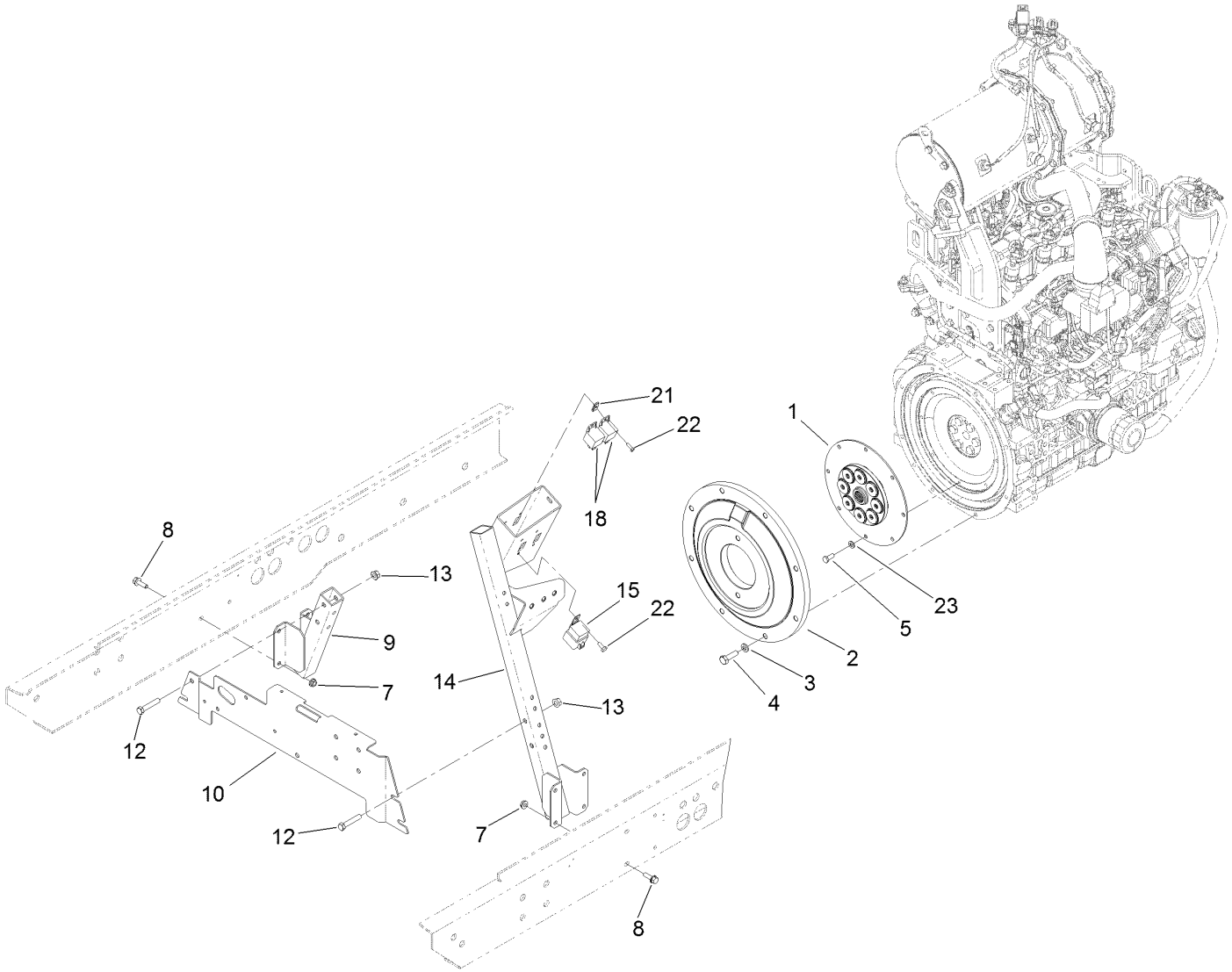

Engine and Flywheel Mounting Assembly

Ref.	Part Number	Qty.	Description
1	120-4176	1	Coupling-Spring, Flywheel
2	115-6657-03	1	Plate-Flywheel
3	107-1413	8	Washer-Hardened
4	117-5663	8	Screw-HH
5	99-5132	8	Bolt
7	32128-20	8	Nut-HF
8	3234-29	8	Screw-HHF
9	104-5420-03	1	Support-Battery
10	114-8134-03	1	Bracket-Support

Ref.	Part Number	Qty.	Description
12	323-10	4	Screw-HH
13	32128-21	4	Nut-HF
14	121-3140-03	1	Bracket-Mount, Air Cleaner
15	99-7430	1	Relay
18	99-7435	2	Relay-Power
21	3290-277	3	Nut-Speed
22	3290-134	3	Screw
23	87-7510	8	Washer-Flat

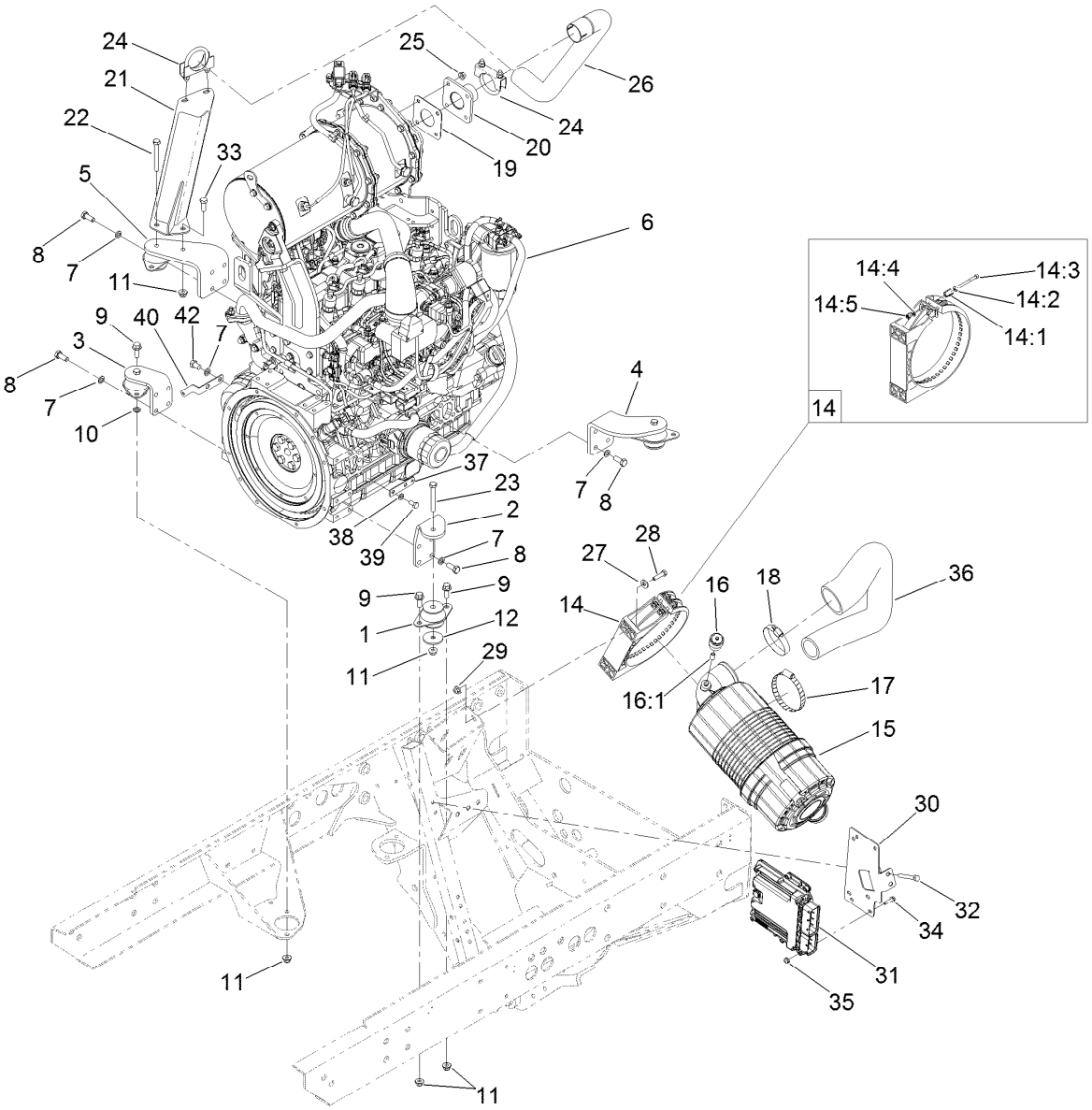

Engine and Air Cleaner Assembly

Ref.	Part Number	Qty.	Description
1	53-9682	4	Mount-Engine
2	120-8001-03	1	Mount-Engine, LH Front
3	120-8002-03	1	Mount-Engine, RH Front
4	120-8003-03	1	Mount-Engine, LH Rear
5	120-8004-03	1	Mount-Engine, RH Rear
6	120-4111	1	Engine-Yanmar, 4Tnv86Ct-Dtr
7	48-9590	18	Washer-Lock
8	33115-025	16	Screw-HH
9	3234-11	8	Screw-HHF
10	3255-9	1	Washer-Lock
11	104-8301	13	Nut-Flange, NI
12	63-7400	4	Washer-Rebound
14	99-5414	1	Strap-Cleaner, Air
14:1	108-1512	2	Spring
14:2	3256-22	2	Washer-Flat
14:3	33113-050	2	Screw-HH
14:4	33093-00	2	Washer-Flat
14:5	33023-00	2	Nut-Lock
15	99-5410	1	Air Cleaner ASM
16	104-3563	1	Indicator

Ref.	Part Number	Qty.	Description
16:1	94-1416	1	Adapter-Indicator
17	2412-110	1	Clamp-Hose
18	2412-125	1	Clamp-Hose
19	121-3058	1	Gasket-Exhaust
20	121-3060	1	Flange-Exhaust
21	121-3098-03	1	Support-Tailpipe
22	323-14	1	Screw-HH
23	323-13	3	Screw-HH
24	18-2130	2	Clamp
25	33004-00	4	Nut-HF
26	121-3061	1	Pipe-Exhaust
27	3256-3	2	Washer-Flat
28	322-6	2	Screw-HH
29	104-8300	4	Nut-Flange, NI
30	130-1666-03	1	Bracket-Controller
31	121-5592	1	Controller-Engine
32	322-11	2	Screw-HH
33	323-6	1	Screw-HH
34	321-9	4	Screw-HH
35	104-7201	4	Nut-HF
36	121-3142	1	Hose-Air Cleaner, Outlet

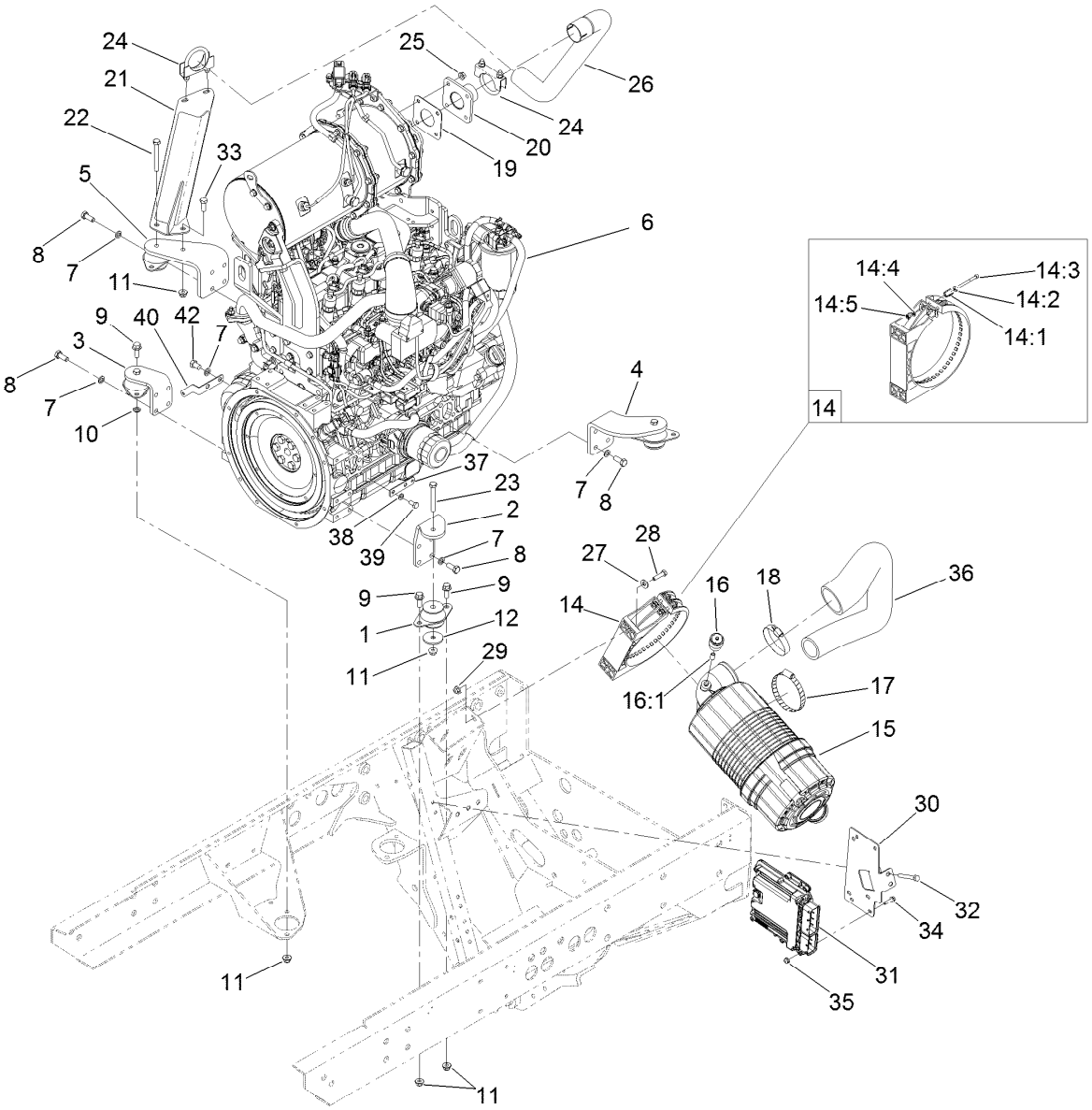

Engine and Air Cleaner Assembly (continued)

Ref.	Part Number	Qty.	Description
37	121-5636	1	Tab-Harness
38	3253-4	2	Washer-Lock
39	33114-016	2	Screw-HH

Ref.	Part Number	Qty.	Description
40	121-6580	1	Bracket-Harness
42	33115-016	2	Screw-HH

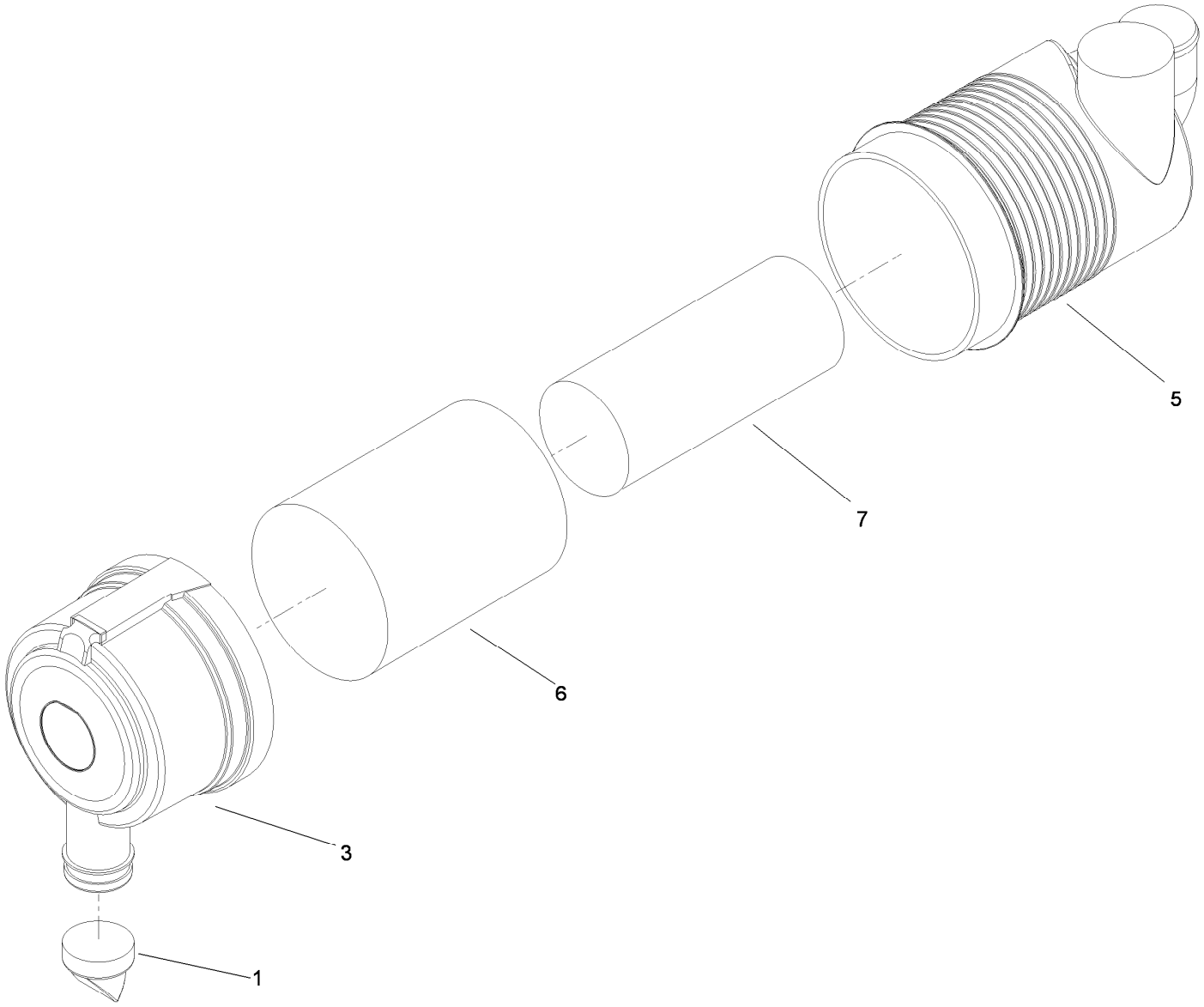

Air Cleaner Assembly No. 99-5410

Ref.	*Part Number*	*Qty.*	*Description*
1	104-4258	1	Valve-Vacuator
3	104-4259	1	Cover
5		1	Body ASM ●
6	108-3814	1	Filter-Air
7	108-3816	1	Filter-Air

● Not serviced separately

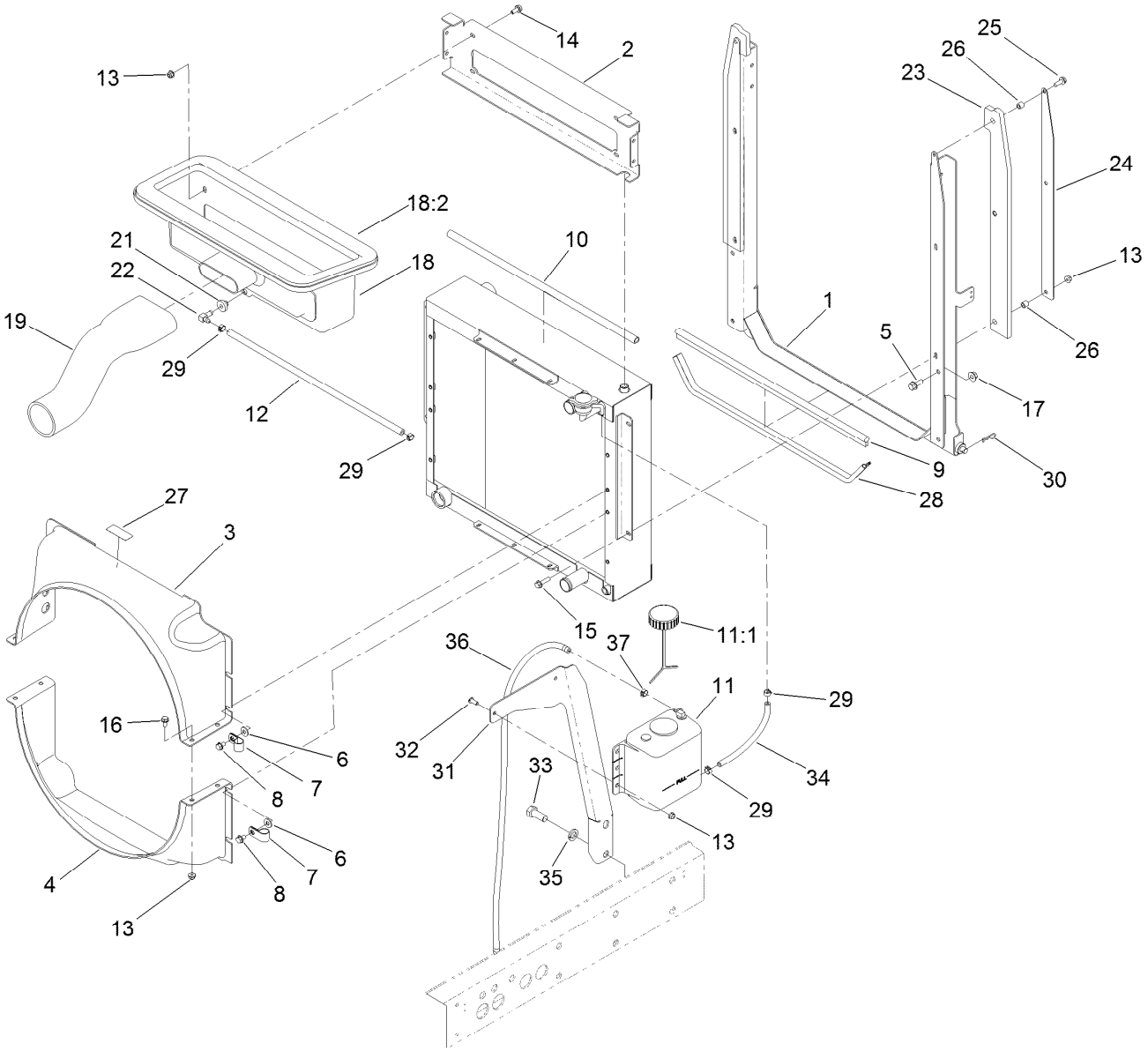

Radiator Mounting Assembly

Ref.	Part Number	Qty.	Description
1	121-3084-03	1	Mount-Radiator
2	121-3085-03	1	Plate-Crossover
3	125-4615	1	Shroud-Radiator, Upper
4	121-3106	1	Shroud-Radiator, Lower
5	3234-11	4	Screw-HHF
6	3256-3	8	Washer-Flat
7	2412-81	2	Clamp-R
8	3234-30	8	Screw-HHF
9	105-9858	1	Seal-Bulb
10	114-3828	1	Seal-Bulb
11	120-5571	1	Coolant Reservoir ASM
11:1	87-7050	1	Cap-Reservoir
12	110-3258	1	Hose-Fuel
13	104-8300	18	Nut-Flange, NI
14	3234-47	8	Screw-HHF
15	3234-36	4	Screw-HHF
16	3234-7	4	Screw-HHF
17	32128-43	4	Nut-Flange
18	115-4363	1	Plenum ASM

Ref.	Part Number	Qty.	Description
18:2	115-4393	1	Seal-Plenum
19	121-3143	1	Hose-Air Cleaner, Inlet
21	46-6560	1	Bushing
22	46-6550	1	Fitting-Elbow, 90 DEG
23	121-3087	2	Seal-Foam, Hood
24	121-3086-03	2	Bracket-Seal, Hood
25	32144-41	2	Screw-Taptite
26	1-603903	6	Spacer
27	117-4766	1	Decal-Warning, Fan
28	117-4782	1	Seal-Bulb
29	92-2379	4	Clamp-Hose
30	3290-467	2	Pin-Hair
31	125-4609-03	1	Bracket-Tank, Mount
32	3274-55	2	Screw-HSBH
33	327-4	2	Screw-HH
34	109-0282	1	Hose-Fuel
35	3253-8	2	Washer-Lock
36	109-0273	1	Hose-Fuel
37	92-2379	1	Clamp-Hose

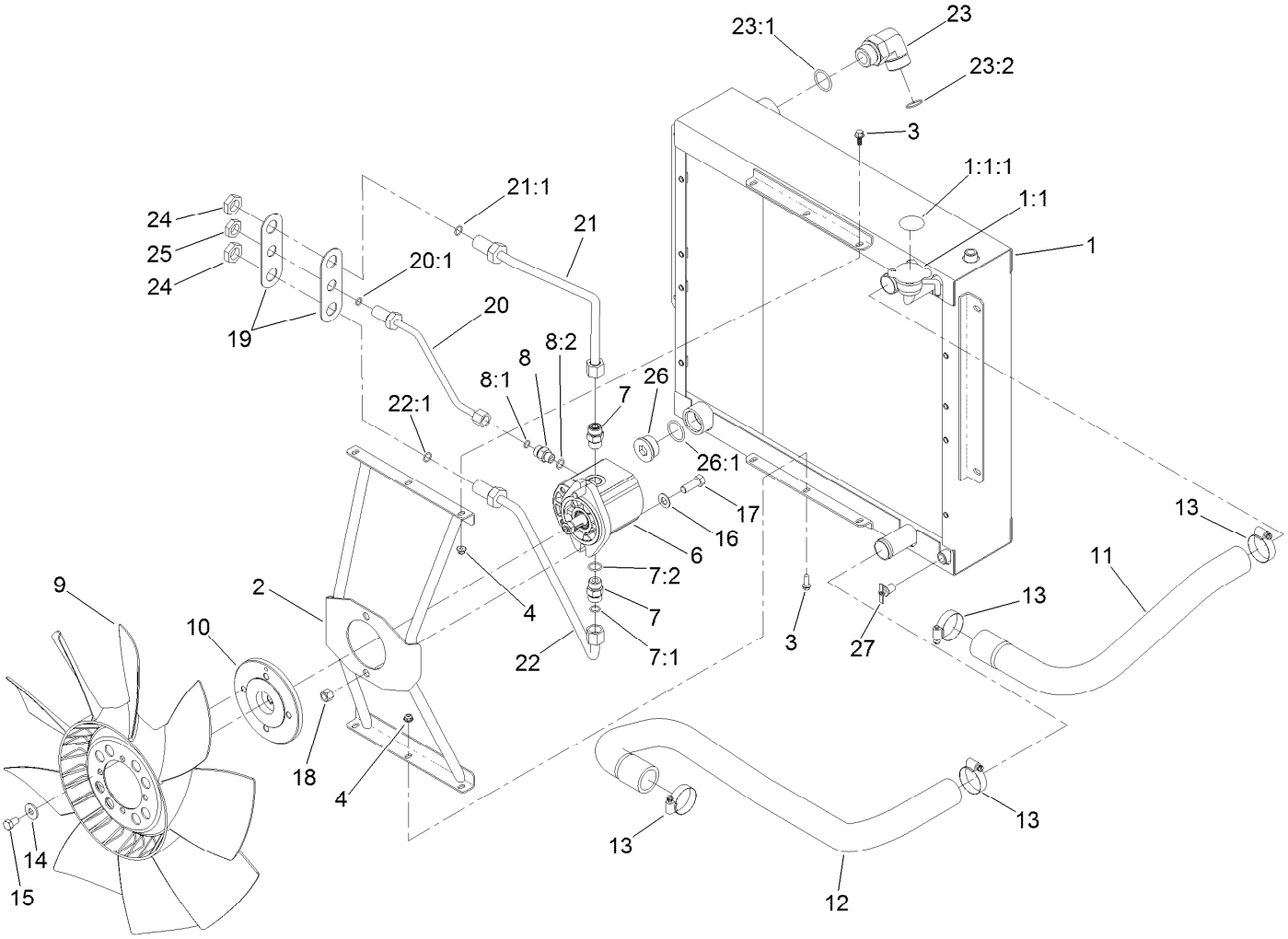

Radiator and Fan Assembly

Ref.	Part Number	Qty.	Description
1	121-3080	1	Radiator/Oil Cooler
1:1	115-7766	1	Cap-Radiator
1:1:1	106-6755	1	Decal-Cap, Radiator
2	120-8935-03	1	Bracket-Fan
3	99-6810	6	Screw-HHF
4	104-7201	6	Nut-HF
6	117-4769	1	HYD Motor ASM
7	340-4	2	Fitting-HYD, Straight
7:1	237-30	1	O-Ring
7:2	237-79	1	O-Ring
8	340-2	1	Fitting-HYD, Straight
8:1	237-22	1	O-Ring
8:2	237-42	1	O-Ring
9	114-3825	1	Fan
10	117-2364	1	Hub-Fan
11	121-1476	1	Hose-Radiator, Upper
12	121-1477	1	Hose-Radiator, Lower
13	2412-111	4	Clamp
14	80-6990	4	Washer-Hardened

Ref.	Part Number	Qty.	Description
15	115-8486	4	Screw-HH
16	3256-25	2	Washer-Flat
17	324-5	2	Screw-HH
18	3296-48	2	Nut-Lock, NI
19	125-4610	2	Shim-Support
20	125-4598	1	Tube ASM
20:1	237-22	1	O-Ring
21	125-4596	1	Tube ASM
21:1	237-30	1	O-Ring
22	125-4597	1	Tube ASM
22:1	237-30	1	O-Ring
23	340-129	2	Fitting-HYD, 90
23:1	237-146	1	O-Ring
23:2	340-65	1	O-Ring
24	340-127	2	Nut-Bulkhead
25	340-70	1	Nut-Lock
26	105-3921	1	Fitting-Plug
26:1	237-146	1	O-Ring
27	304-46	1	Draincock

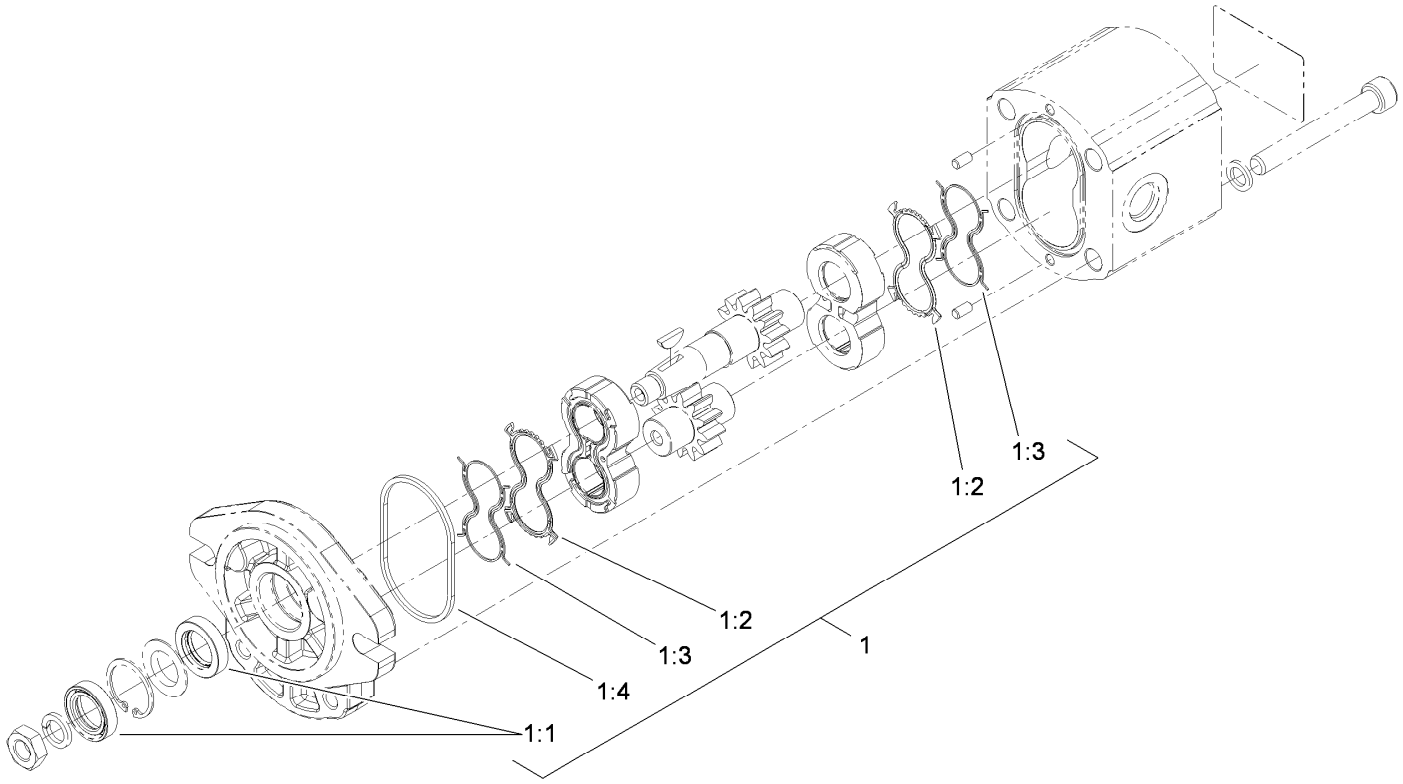

Hydraulic Motor Assembly No. 117-4769

Ref.	*Part Number*	*Qty.*	*Description*
1	115-4110	1	Seal Kit
1:1		2	Seal-Shaft ●
1:2		2	Seal-Plate, Balancing ●
1:3		2	Seal-Anti Extrusion ●
1:4		2	O-Ring (Housing) ●

● Not serviced separately

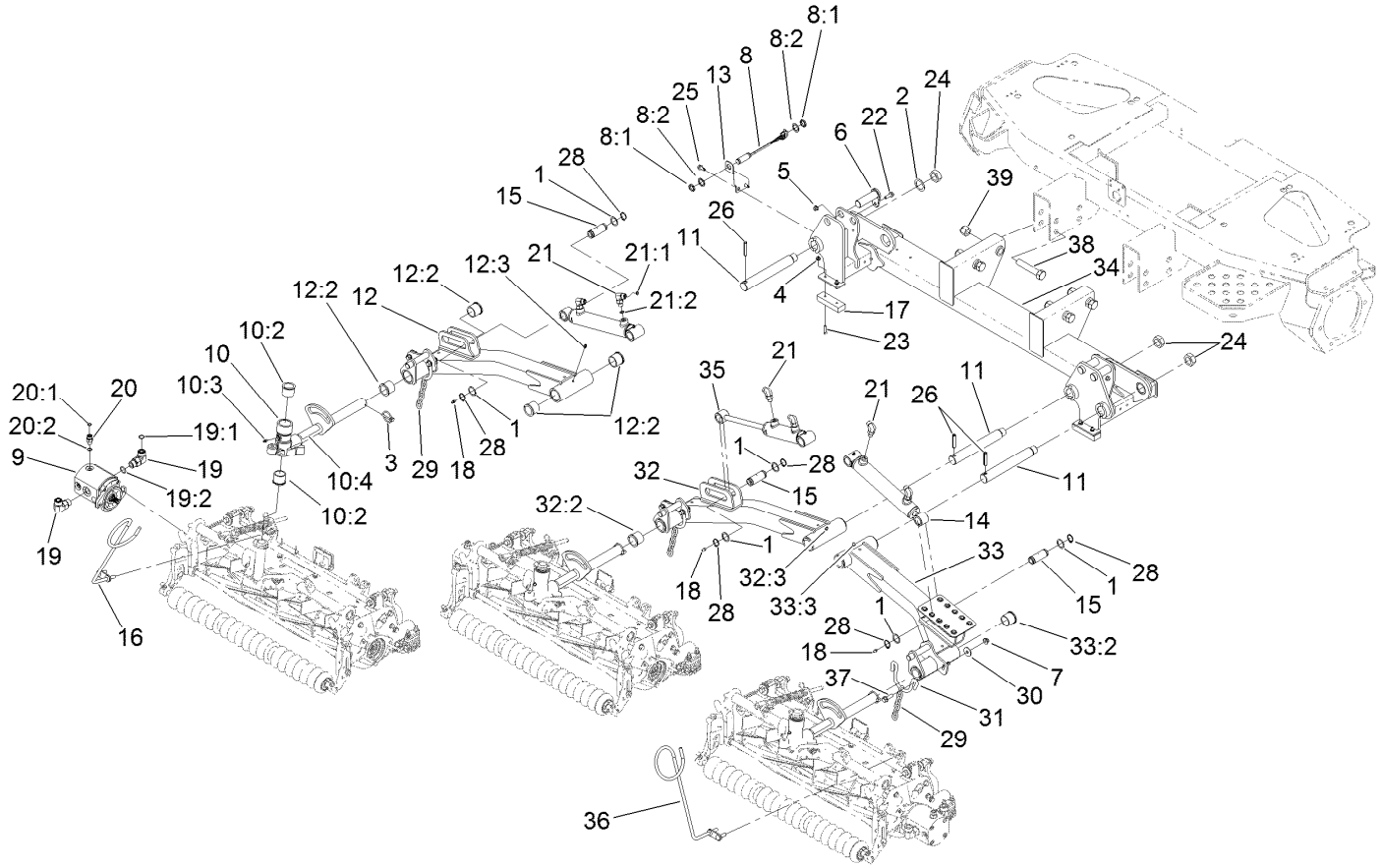

Front Reel Lift Assembly

Ref.	Part Number	Qty.	Description
1	5-1550	6	Washer
2	76-2980	6	Washer-Thrust
3	92-1298	3	Pin-Lynch
4	104-7201	4	Nut-HF
5	104-8300	3	Nut-Flange, NI
6	125-1906	3	Pin-Cylinder
7	104-8301	6	Nut-Flange, NI
8	115-5300	1	Proximity Switch ASM
8:1	117-3207	2	Nut-Hex
8:2	117-3208	2	Washer-Lock, Internal Tooth
9	115-8250	3	Gear Motor ASM
10	117-0954	3	Pivot Yoke ASM
10:2	104-0015	2	Bushing-Flange
10:3	302-5	1	Fitting-Grease
10:4	110-9642	1	Decal-Warning
11	119-1499	3	Pin-Pivot
12	119-1505	1	#5 Lift Arm ASM
12:2	104-0015	4	Bushing-Flange
12:3	302-5	2	Fitting-Grease
13	119-1506	1	Bracket-Switch
14	125-1660	2	Cylinder-HYD

Ref.	Part Number	Qty.	Description
15	119-3894	3	Pin-Plain
16	119-3920	1	Guide-Hose, RH
17	125-1657	2	Bumper-Pad, Recessed
18	302-5	3	Fitting-Grease
19	340-17	6	Fitting-HYD, 90 DEG
19:1	237-65	1	O-Ring
19:2	237-80	1	O-Ring
20	340-2	3	Fitting-HYD, Straight
20:1	237-22	1	O-Ring
20:2	237-42	1	O-Ring
21	340-77	6	Fitting-HYD, 90 DEG
21:1	237-22	1	O-Ring
21:2	237-42	1	O-Ring
22	3234-17	3	Screw-HHF
23	3274-9	4	Screw-HSH
24	3296-49	3	Nut-Lock, NI
25	32104-32	2	Screw-HWH
26	32121-110	3	Pin-Roll, Slotted
28	32151-36	6	Ring-Retaining
29	5-1096	3	Chain-Lift
30	63-8410	6	Washer

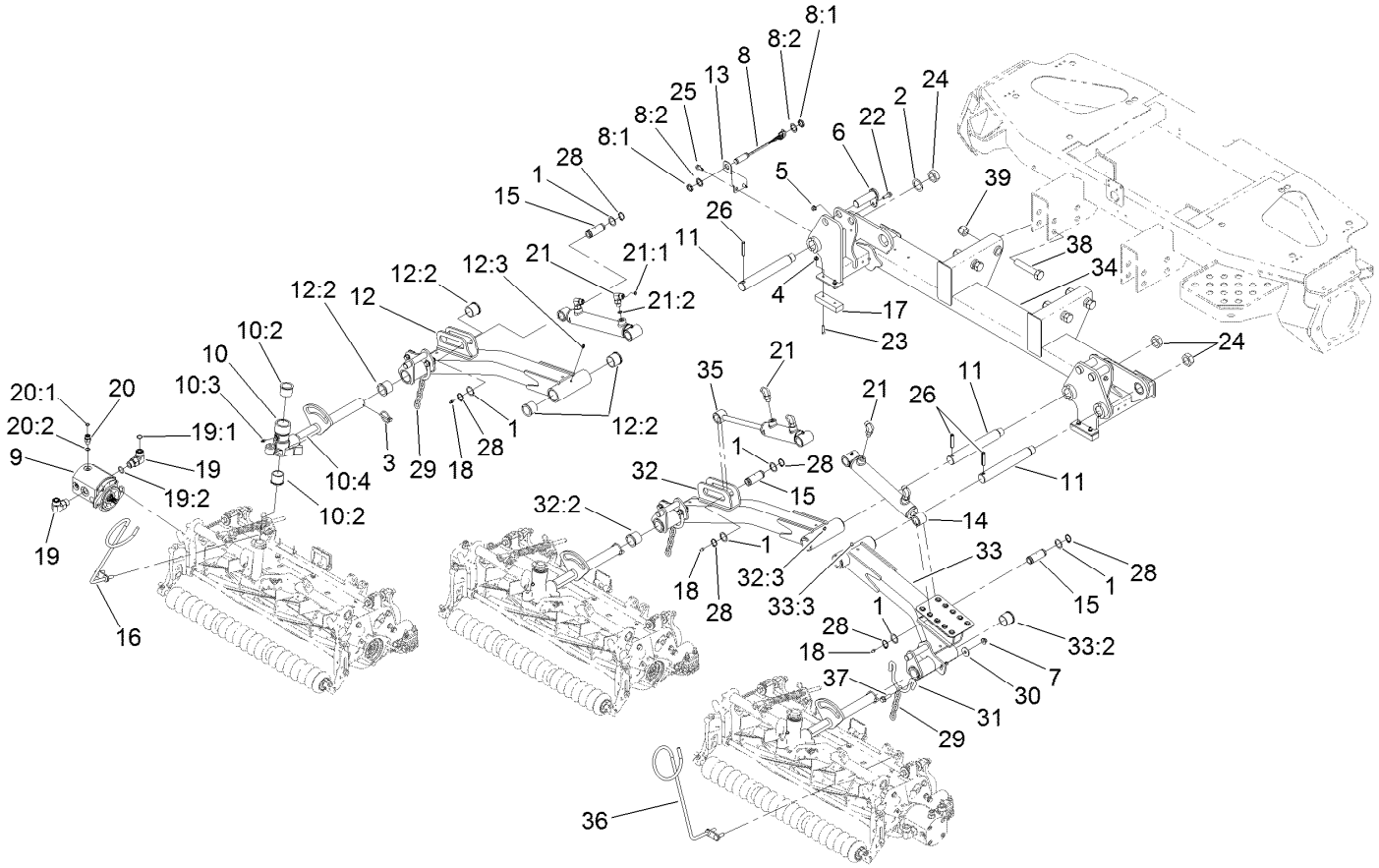

Front Reel Lift Assembly (continued)

Ref.	Part Number	Qty.	Description
31	110-0922	3	Hoop-Chain
32	119-1501	1	#1 Lift Arm ASM
32:2	104-0015	4	Bushing-Flange
32:3	302-5	2	Fitting-Grease
33	119-1504	1	#4 Lift Arm ASM
33:2	104-0015	4	Bushing-Flange
33:3	302-5	2	Fitting-Grease

Ref.	Part Number	Qty.	Description
34	119-1508-03	1	Front Carrier Frame ASM
35	125-1658	1	Cylinder-HYD
36	119-3921	1	Guide-Hose, LH
37	119-4061	6	Screw-HHF
38	328-7	4	Screw-HH
39	3296-51	4	Nut-Lock, NI

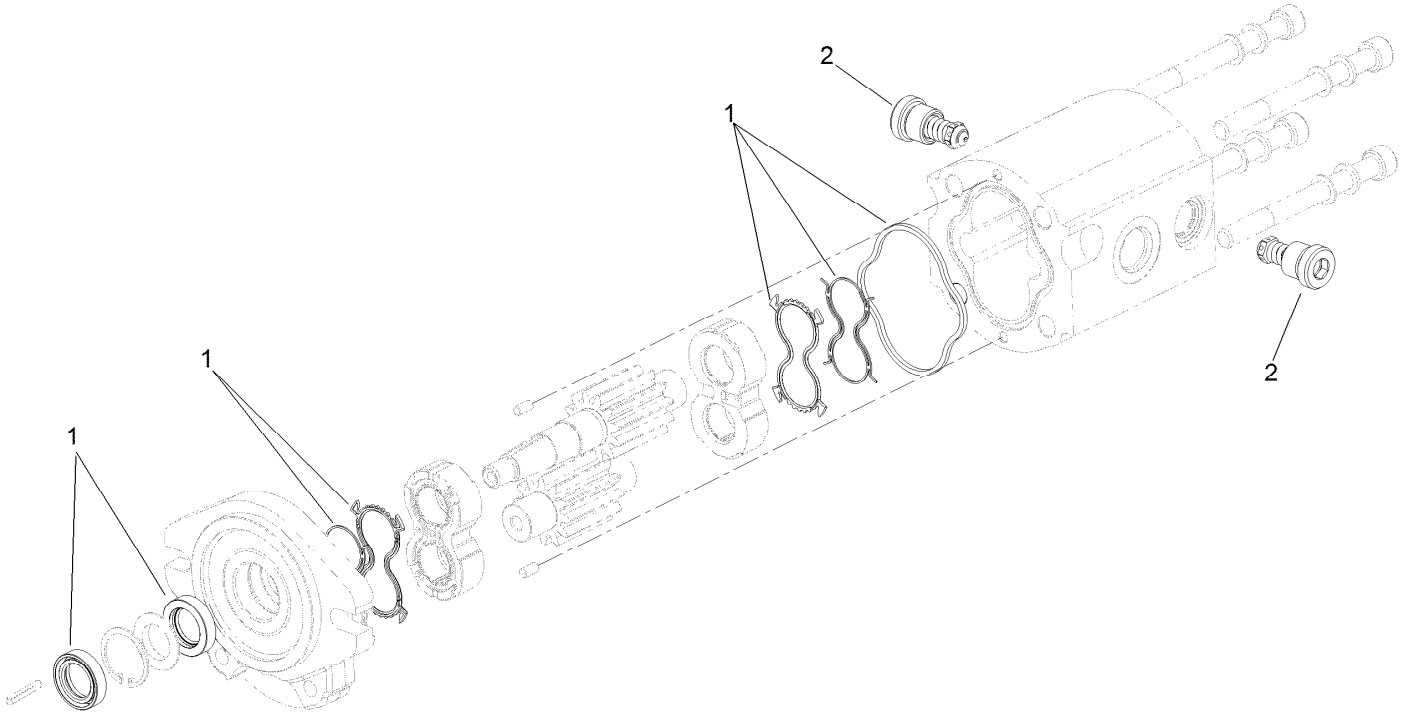

Gear Motor Assembly No. 115-8250

Ref.	*Part Number*	*Qty.*	*Description*
1	125-1682	1	Motor Seal Kit
2	117-5107	2	Valve-Check

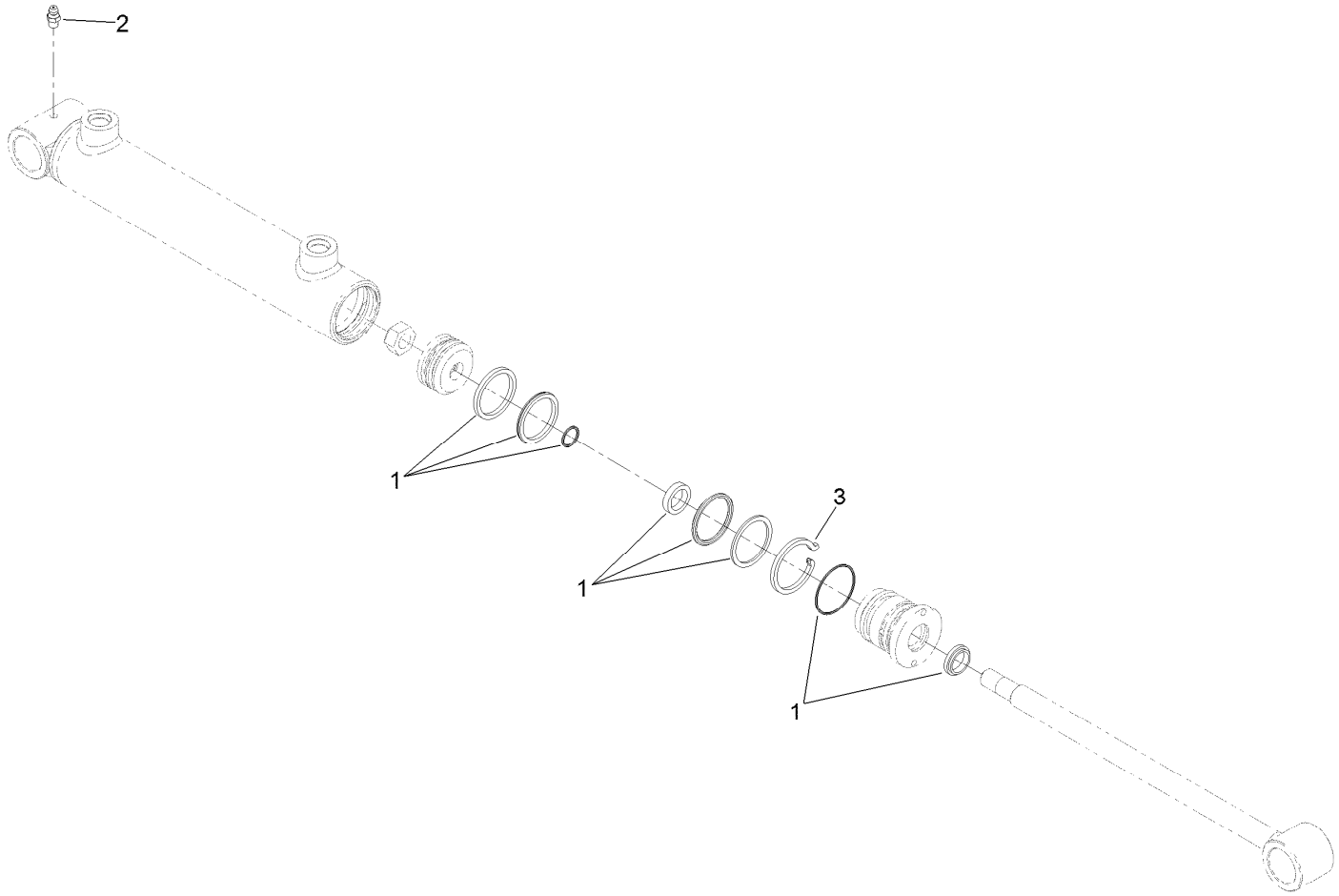

Hydraulic Cylinder Assembly No. 125-1660

Ref.	*Part Number*	*Qty.*	*Description*
1	125-1680	1	Repair Kit-Cylinder
2	302-5	1	Fitting-Grease
3	84-1680	1	Ring-Retaining

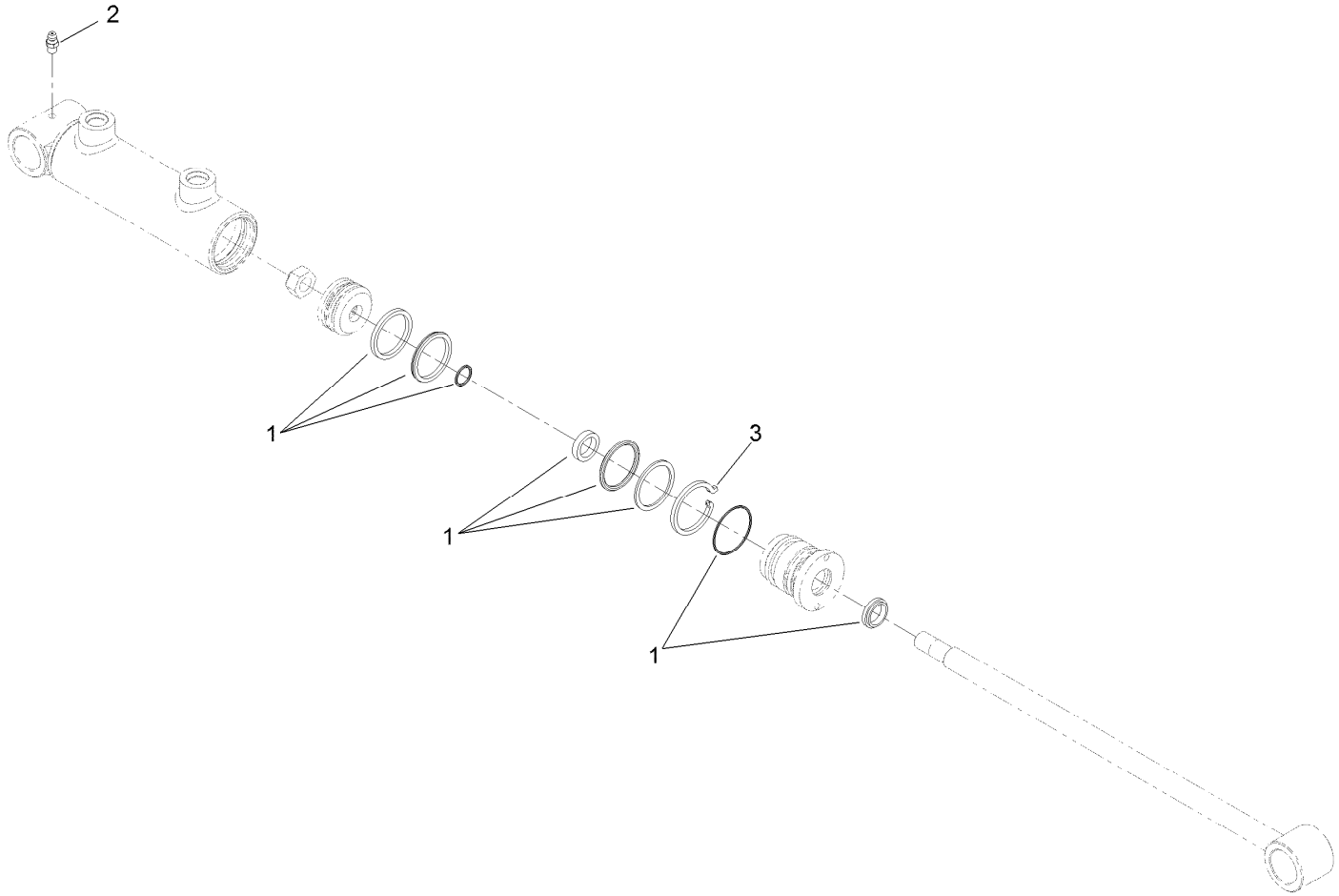

Hydraulic Cylinder Assembly No. 125-1658

Ref.	*Part Number*	*Qty.*	*Description*
1	125-1680	1	Repair Kit-Cylinder
2	302-5	1	Fitting-Grease
3	84-1680	1	Ring-Retaining

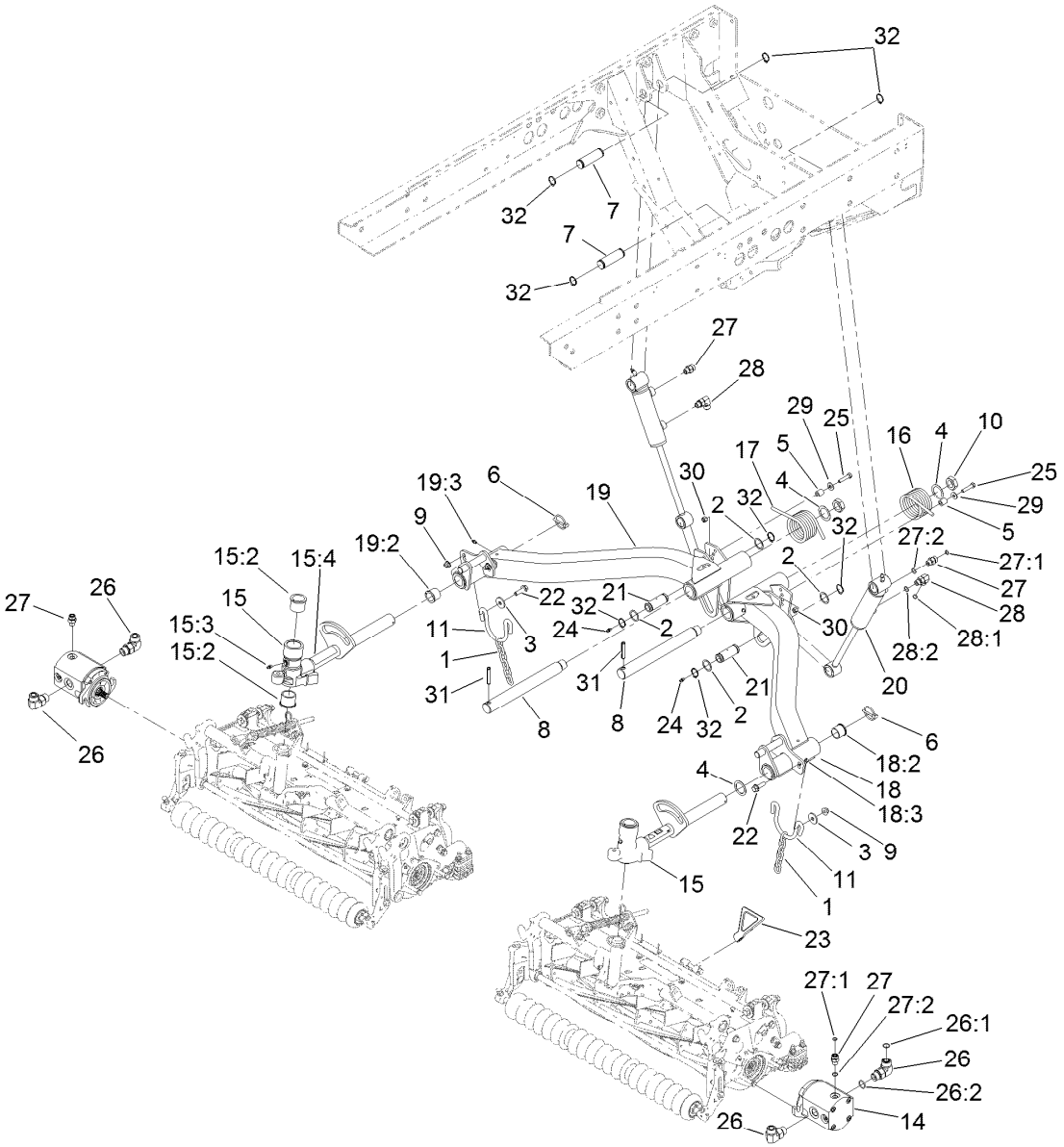

Rear Reel Lift Assembly

Ref.	Part Number	Qty.	Description
1	5-1096	2	Chain-Lift
2	5-1550	4	Washer
3	63-8410	4	Washer
4	76-2980	4	Washer-Thrust
5	82-6840	2	Spacer
6	92-1298	2	Pin-Lynch
7	92-7548	2	Pin-Cylinder
8	95-7158	2	Pin-Pivot
9	104-8301	4	Nut-Flange, NI
10	3296-49	2	Nut-Lock, NI
11	110-0922	2	Hoop-Chain
14	115-8250	2	Gear Motor ASM
15	117-0954	2	Pivot Yoke ASM
15:2	104-0015	2	Bushing-Flange
15:3	302-5	1	Fitting-Grease
15:4	110-9642	1	Decal-Warning
16	119-1480	1	Spring-Torsion, LH
17	119-1481	1	Spring-Torsion, RH
18	119-1502	1	#2 Lift Arm ASM
18:2	104-0015	4	Bushing-Flange
18:3	302-5	2	Fitting-Grease

Ref.	Part Number	Qty.	Description
19	119-1503	1	#3 Lift Arm ASM
19:2	104-0015	4	Bushing-Flange
19:3	302-5	2	Fitting-Grease
20	125-1659	2	Cylinder-HYD
21	119-3894	2	Pin-Plain
22	119-4061	4	Screw-HHF
23	119-8010	1	Kickstand-Cu
24	302-5	2	Fitting-Grease
25	322-7	2	Screw-HH
26	340-17	4	Fitting-HYD, 90 DEG
26:1	237-65	1	O-Ring
26:2	237-80	1	O-Ring
27	340-2	4	Fitting-HYD, Straight
27:1	237-22	1	O-Ring
27:2	237-42	1	O-Ring
28	340-77	2	Fitting-HYD, 90 DEG
28:1	237-22	1	O-Ring
28:2	237-42	1	O-Ring
29	3256-3	2	Washer-Flat
30	3296-29	2	Nut-Lock, NI

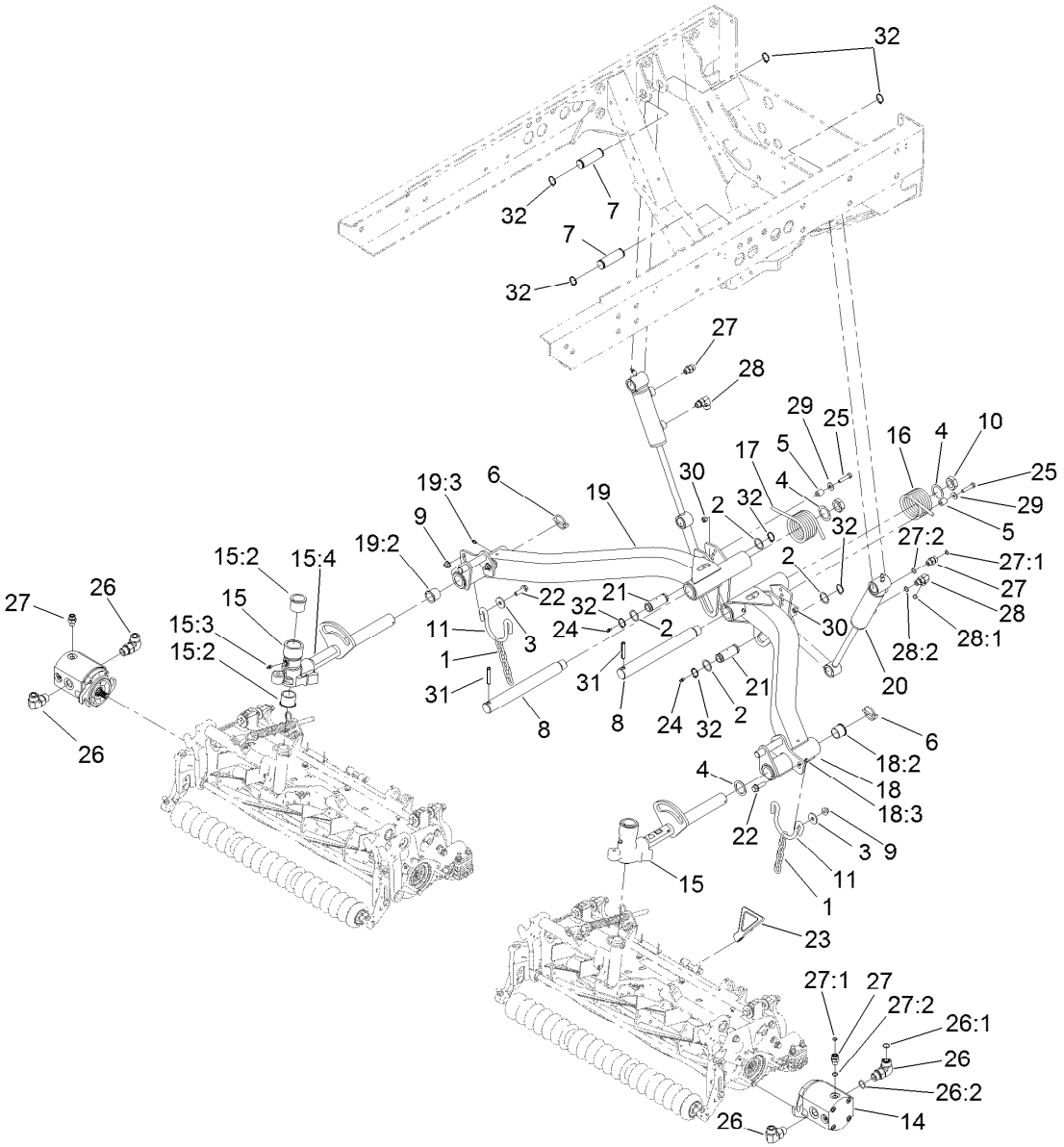

Rear Reel Lift Assembly (continued)

Ref.	*Part Number*	*Qty.*	*Description*
31	32121-110	2	Pin-Roll, Slotted
32	32151-36	8	Ring-Retaining

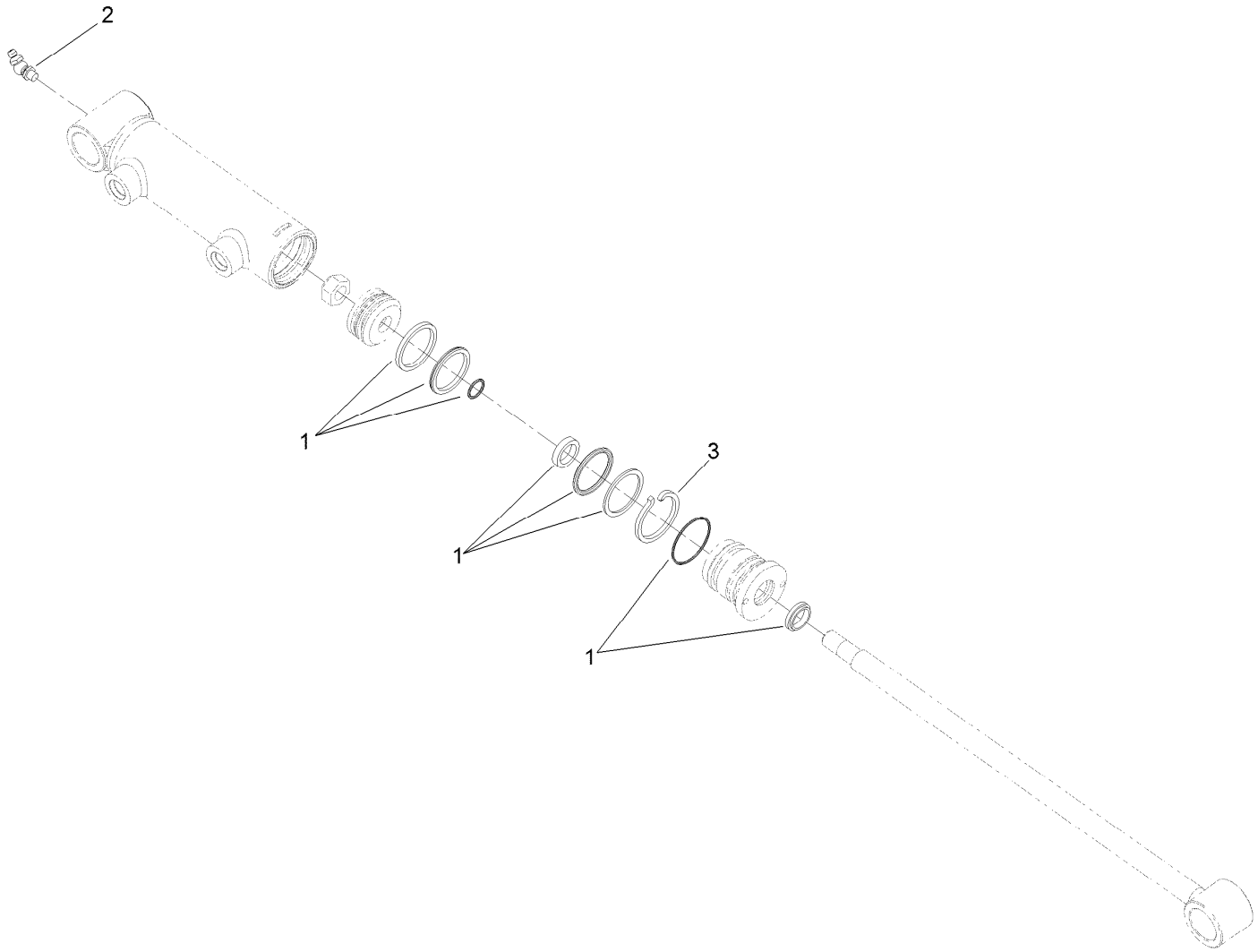

Hydraulic Cylinder Assembly No. 125-1659

Ref.	*Part Number*	*Qty.*	*Description*
1	125-1680	1	Repair Kit-Cylinder
2	302-10	1	Fitting-Grease
3	84-1680	1	Ring-Retaining

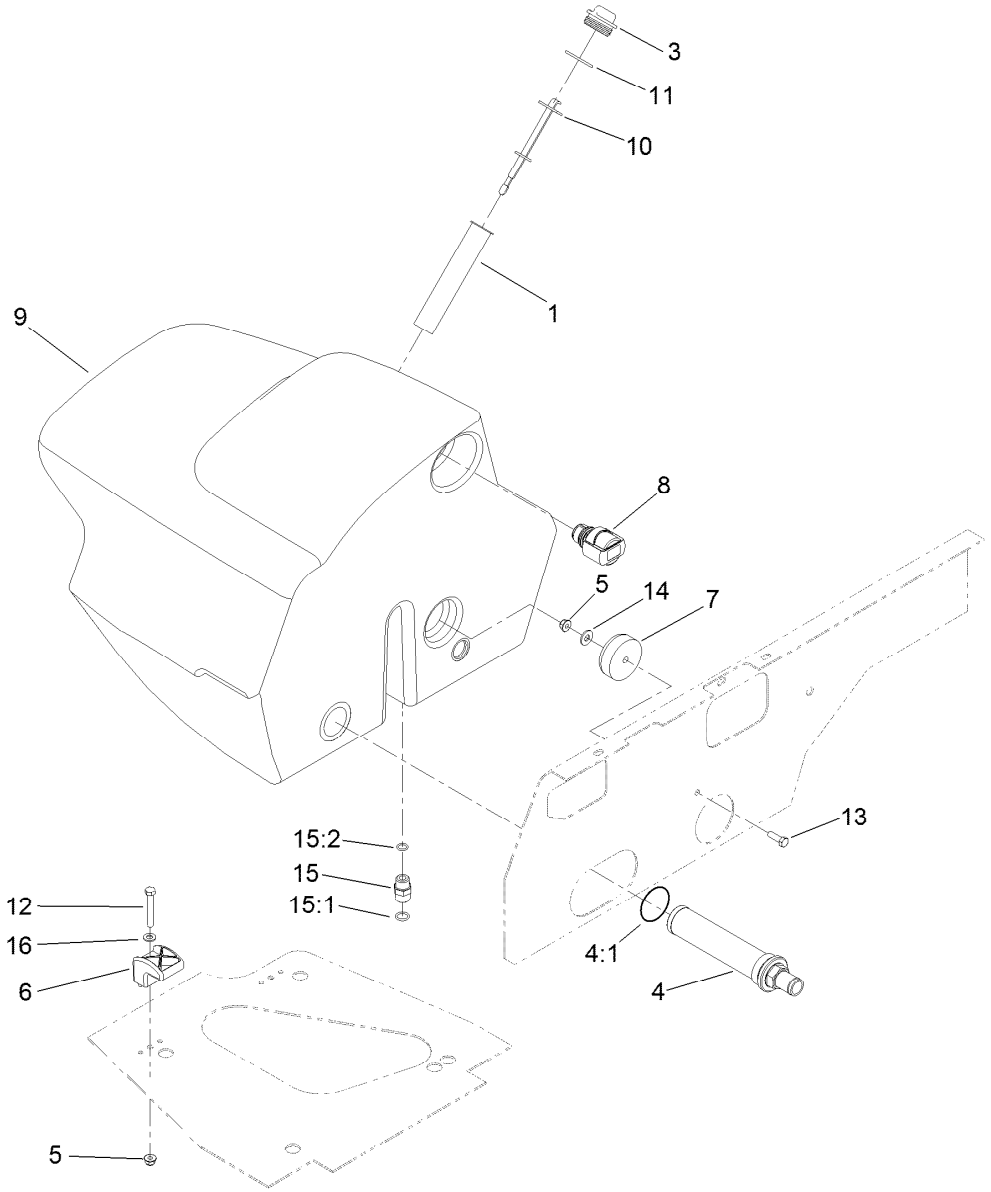

Hydraulic Tank Assembly

Ref.	Part Number	Qty.	Description
1	61-2790	1	Filter-Screen
3	93-7498	1	Plug-Plastic
4	104-7546	1	Tank Strainer ASM
4:1	340-136	1	O-Ring
5	104-8300	3	Nut-Flange, NI
6	107-4543	2	Clamp
7	108-1605	1	Bumper-Recess
8	115-9793	1	Breather
9	119-0017	1	Tank-HYD

Ref.	Part Number	Qty.	Description
10	119-6968	1	Dipstick-Oil
11	237-101	1	O-Ring
12	322-11	2	Screw-HH
13	322-5	1	Screw-HH
14	3256-3	1	Washer-Flat
15	340-4	1	Fitting-HYD, Straight
15:1	237-30	1	O-Ring
15:2	237-79	1	O-Ring
16	3256-23	2	Washer-Flat

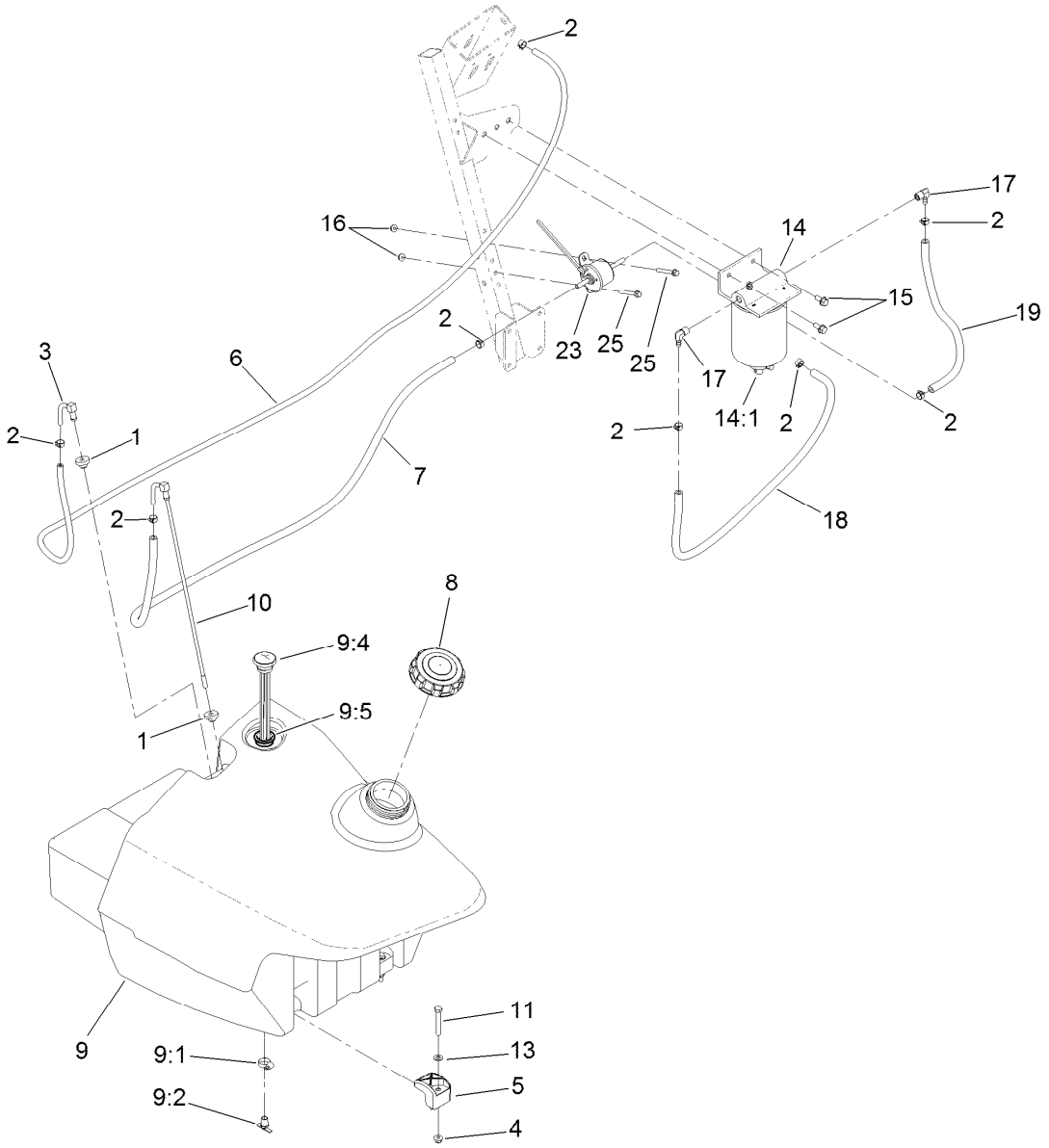

Fuel System Assembly

Ref.	Part Number	Qty.	Description
1	46-6560	2	Bushing
2	92-2379	8	Clamp-Hose
3	121-3127	1	Fitting-Return
4	104-8300	2	Nut-Flange, NI
5	107-4543	2	Clamp
6	119-0577	1	Hose-Fuel
7	110-8802	1	Hose-Fuel
8	125-9172	1	Cap-Fuel, Diesel, Ultra Low Sulfur
9	115-4353	1	Fuel Tank ASM
9:1	2412-36	1	Clamp-Hose
9:2	304-46	1	Draincock
9:4	117-4790	1	Guage-Fuel

Ref.	Part Number	Qty.	Description
9:5	95-8972	1	Grommet
10	115-4354	1	Tube-Suction, Fuel
11	322-11	2	Screw-HH
13	3256-23	2	Washer-Flat
14	125-2914	1	Separator Filter ASM
14:1	125-2915	1	Filter-Spin On
15	3234-5	2	Screw-HHF
16	104-7201	2	Nut-HF
17	353-781	2	Fitting-Elbow
18	110-6186	1	Hose-Fuel
19	110-4113	1	Hose-Fuel
23	121-5613	1	Pump-Fuel, Electric
25	3234-34	2	Screw-HHF

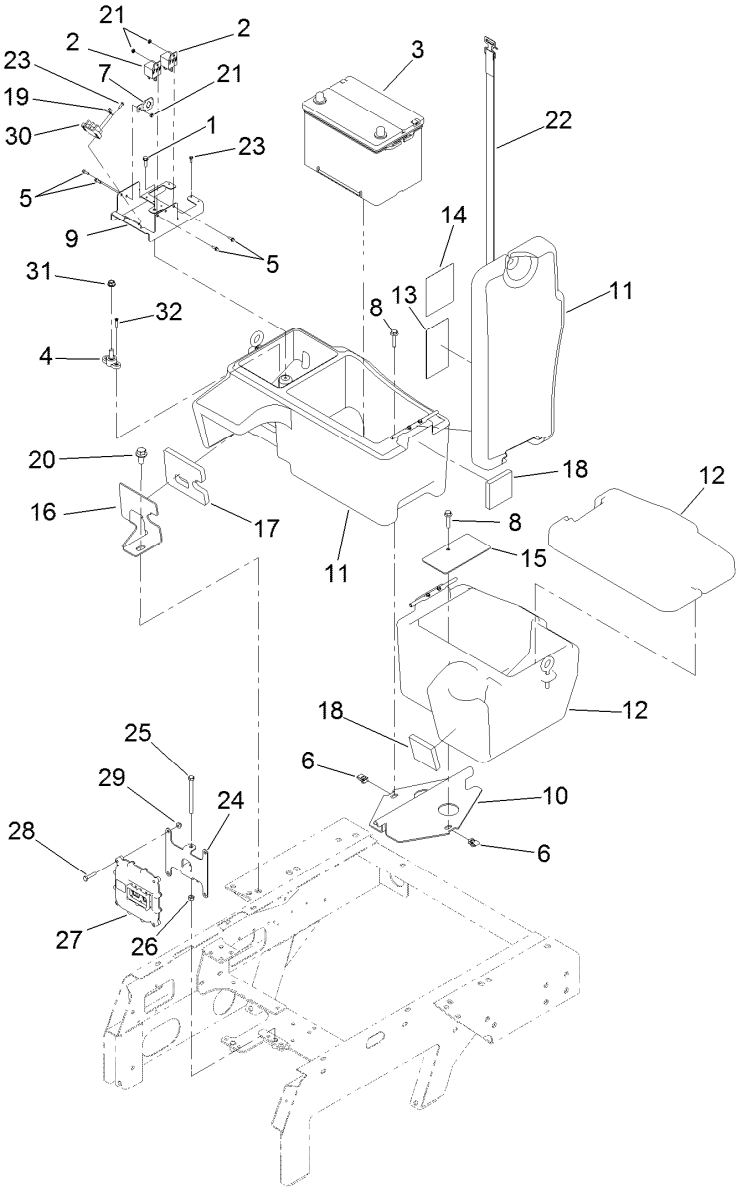

Battery and Storage Box Assembly

Ref.	Part Number	Qty.	Description
1	46-8091	1	Screw-HWH
2	99-7435	2	Relay-Power
3	106-5189	1	Battery-12 Volt, Wet
4	110-8822	1	Block-Junction
5	112-3169	3	Screw-HHF, Serrated
6	112-3306	2	Nut
7	114-5502	1	Clip-Fuse
8	115-1794	2	Screw-HHF
9	115-4356-03	1	Mount-Fuse Block
10	115-4387-03	1	Support-Box, Storage
11	115-9100	1	Box-Storage, Battery
12	115-9101	1	Box-Storage
13	130-1651	1	Decal-Service
14	125-4605	1	Decal-Fuse
15	117-4768-03	1	Plate-Box, Storage
16	117-4774-03	1	Clamp
17	117-4775	1	Seal-Battery Box
18	117-4783	2	Seal-Foam
19	42863	1	Strip-Jumper
20	3234-6	1	Screw-HHF
21	3296-54	3	Nut-Lock
22	3339-175	1	Strapping-Web
23	32144-87	6	Screw-HWHTF
24	117-2360-03	1	Bracket-Mount, Controller
25	322-19	1	Screw-HH
26	3217-6	1	Nut-Hex
27	114-3321	1	Controller-Tec
28	321-8	4	Screw-HH
29	104-7201	4	Nut-HF
30	42862	1	Block-Terminal, Ground
31	3290-357	1	Nut-HHF, Whiz
32	93-0231	2	Screw-PPH

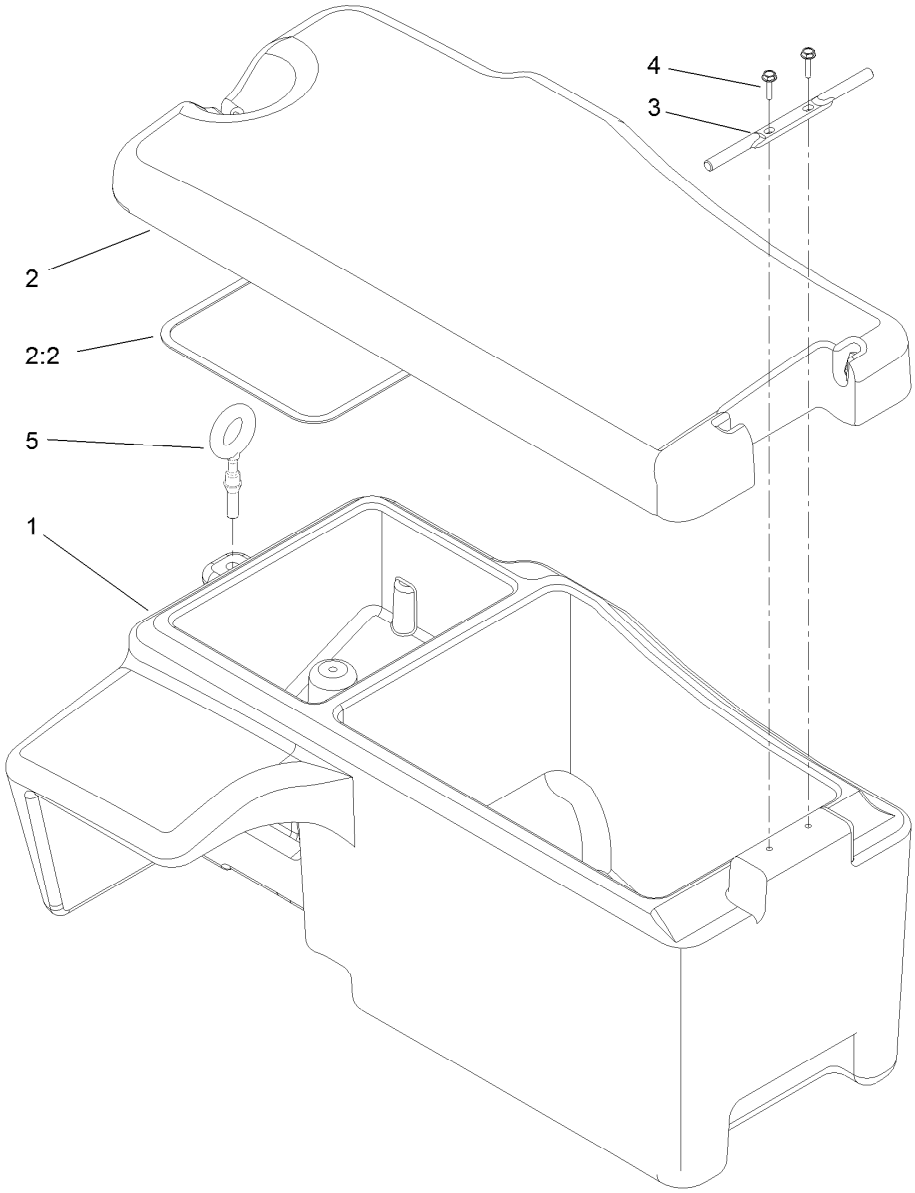

Battery Storage Box Assembly No. 115-9100

Ref.	*Part Number*	*Qty.*	*Description*
1	114-8124	1	Box-Storage, RH
2	115-4368	1	Cover ASM
2:2	115-4367	1	Seal-Cover
3	114-8132	1	Hinge-Cover
4	98-1375	2	Screw-HWH
5	115-4366	1	Latch-Rubber

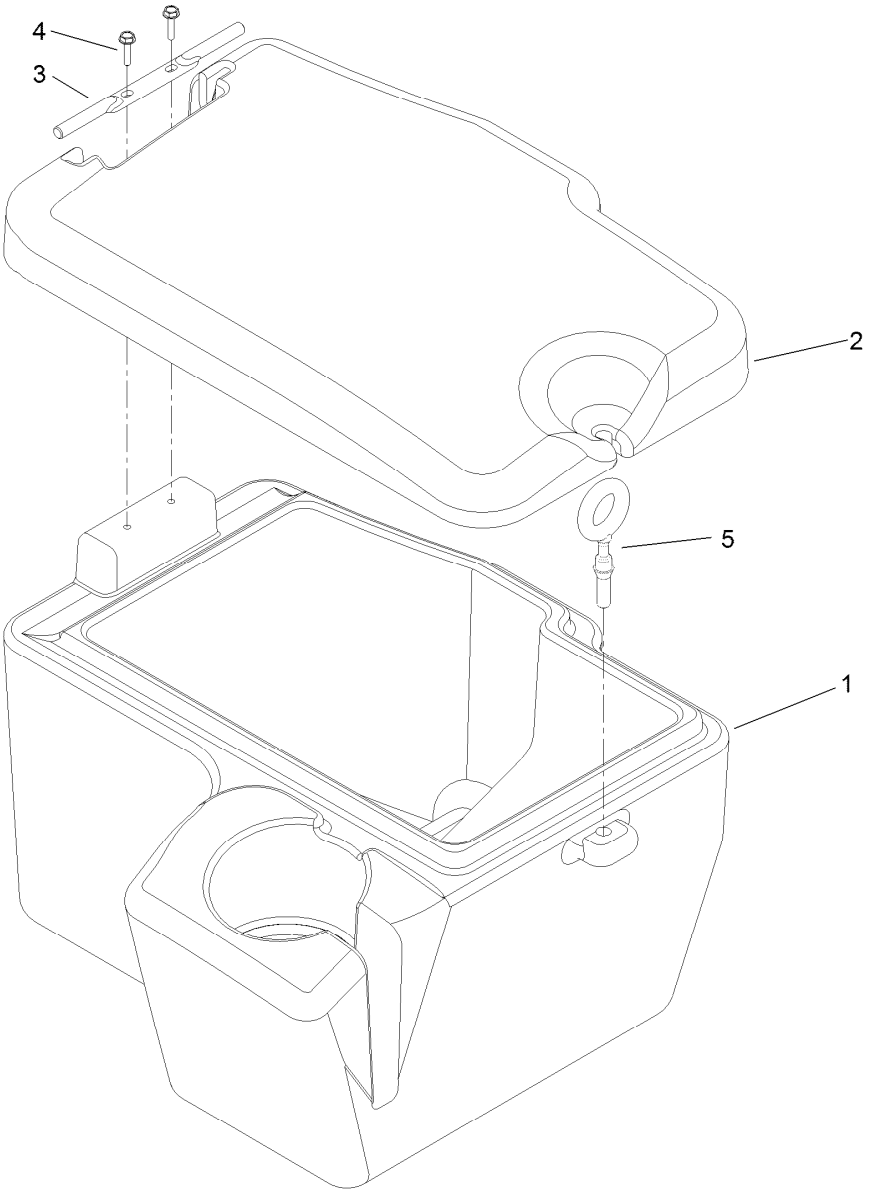

Storage Box Assembly No. 115-9101

Ref.	*Part Number*	*Qty.*	*Description*
1	114-8123	1	Box-Storage, LH
2	114-8125	1	Cover-Storage Box, LH
3	114-8132	1	Hinge-Cover
4	98-1375	2	Screw-HWH
5	115-4366	1	Latch-Rubber

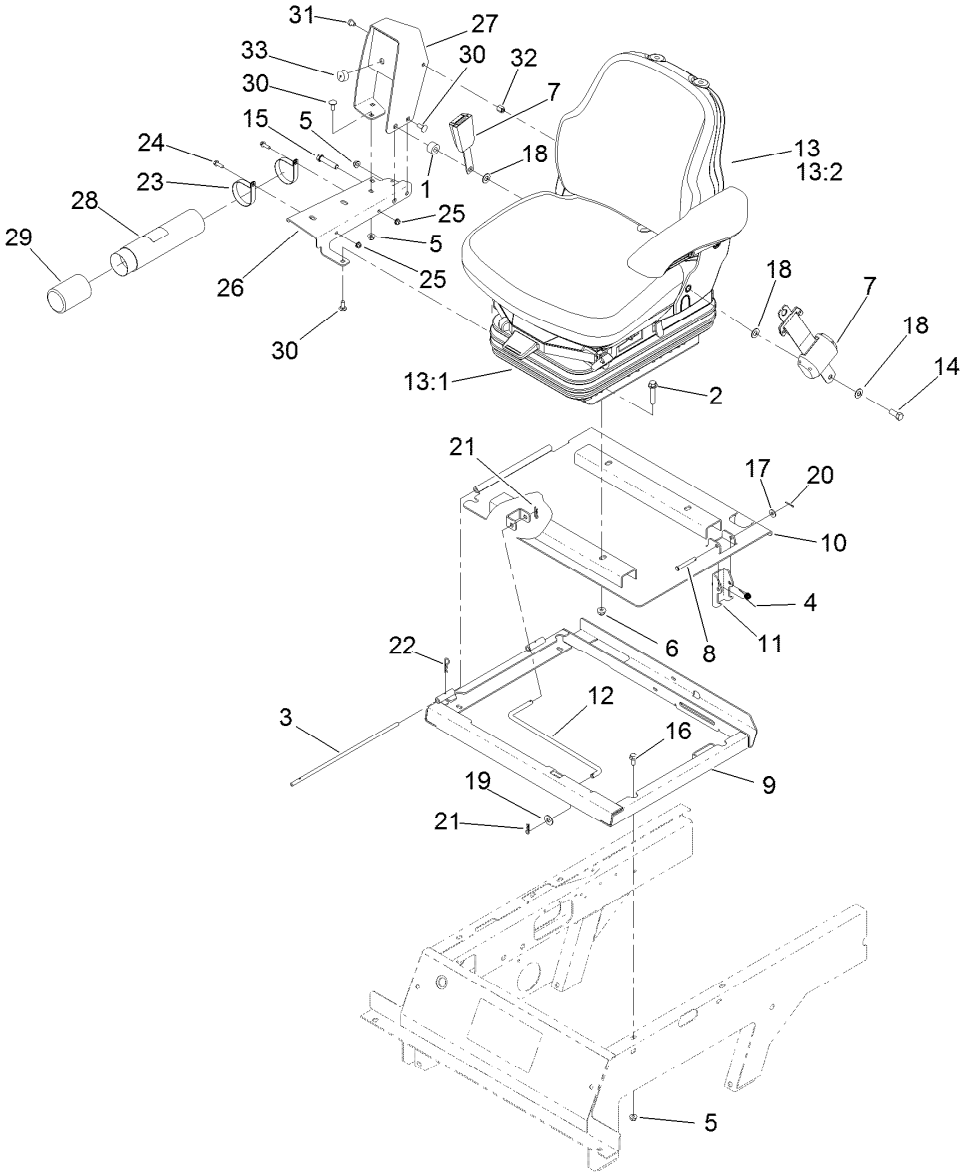

Seat Mount Assembly

Ref.	Part Number	Qty.	Description
1	17-7190	1	Spacer-Finger
2	66-9302	4	Screw-HHF, Whiz
3	75-3400	1	Shaft-Pivot, Seat
4	104-4821	1	Spring-Torsion
5	104-8300	8	Nut-Flange, NI
6	104-8301	4	Nut-Flange, NI
7	110-0413	1	Seatbelt-Retractable
8	110-0618	1	Pin-Clevis
9	115-4400-03	1	Frame-Seat
10	115-4411-03	1	Plate-Seat
11	115-4423-03	1	Latch-Seat Plate
12	117-4797-03	2	Rod-Seat Frame
13	117-5677	1	Seat And Suspension ASM
13:1	108-1488	1	Seat Suspension ASM
13:2	117-5676	1	Premium Seat ASM
14	3212-4	1	Screw-HH
15	3212-8	1	Screw-HH
16	3234-47	4	Screw-HHF

Ref.	Part Number	Qty.	Description
17	3256-2	1	Washer-Flat
18	3256-25	3	Washer-Flat
19	3256-4	2	Washer-Flat
20	3272-6	1	Pin-Cotter
21	3290-307	4	Pin-Hair
22	3290-467	1	Pin-Hair
23	107-1865	2	R-Clamp
24	32105-15	2	Screw-HWH
25	104-7201	2	Nut-HF
26	130-1657-03	1	Channel-Support
27	130-1650-03	1	Control Panel ASM
28	104-7050	1	Tube-Manual
29	104-7048	1	Cap-Housing
30	3230-23	4	Screw-CARR
31	108-8646	1	Screw-HH, Lock
32	112-7405	1	Nut-Hex, Coupling
33	110-8911	1	Seal-Foam

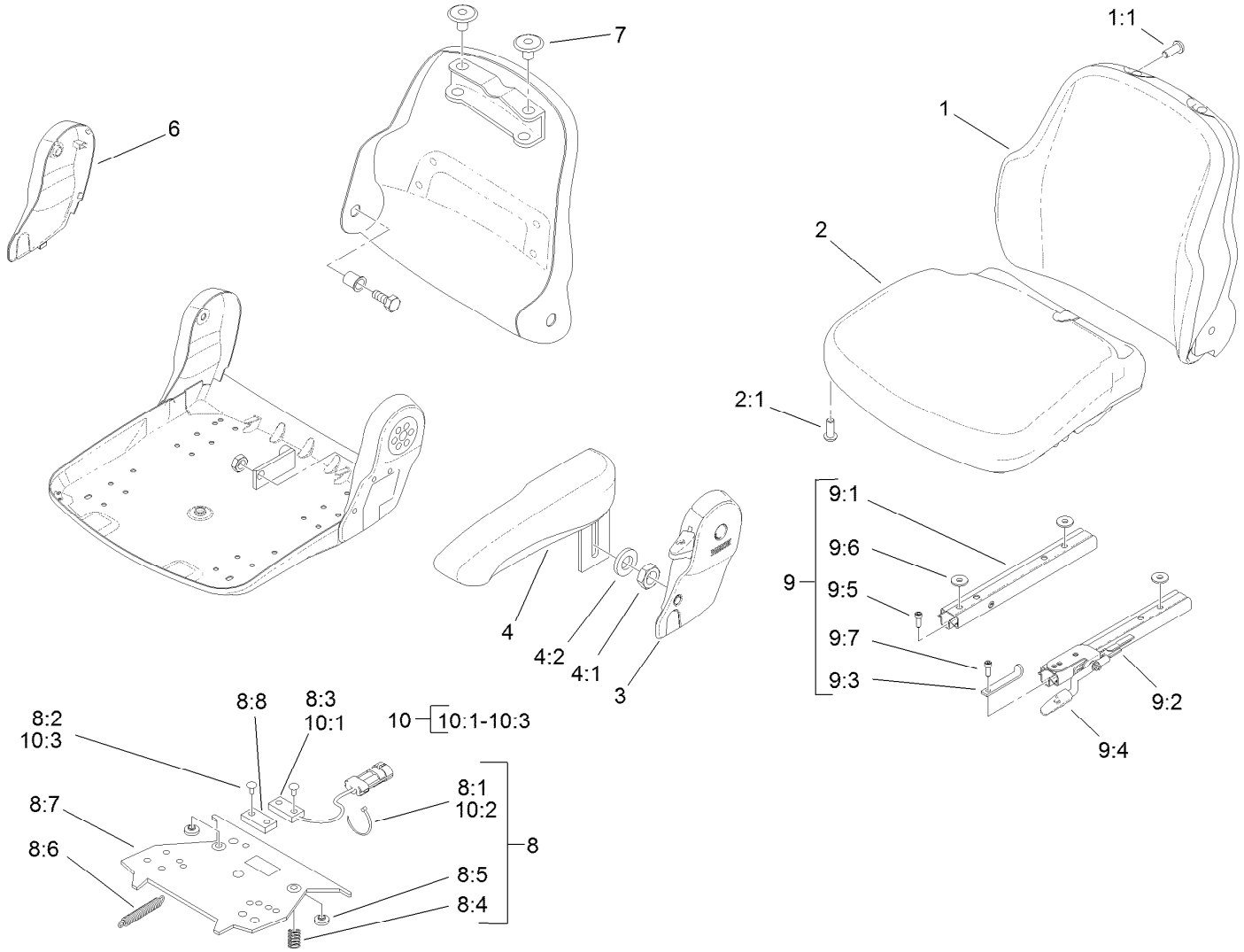

Vinyl Premium Seat Assembly No. 117-5676

Ref.	Part Number	Qty.	Description
1	108-8016	1	Backrest Cushion ASM
1:1	119-7742	4	Screw-Cushion
2	108-8017	1	Seat Cushion ASM
2:1	119-7742	3	Screw-Cushion
3	108-8018	1	Cover-Armrest
4	108-8019	1	LH Armrest ASM
4:1	82-9650	1	Nut
4:2	107-1198	1	Washer
6	108-8021	1	Cover-Armrest
7	108-8022	2	Cover-Black
8	108-8024	1	Switch Kit
8:1		3	Wire Tie ●
8:2		4	Rivet ●
8:3		1	Sensor-Seat Switch ●
8:4		2	Spring-Compression ●
8:5		2	Bumper-Pressure Plate ●

Ref.	Part Number	Qty.	Description
8:6		1	Spring-Extension ●
8:7		1	Plate-Mounting ●
8:8		1	Magnet ●
9	108-8025	1	Adjustment Rail Set
9:1		1	Rail-Adjustment, RH ●
9:2		1	Rail-Adjustment, LH ●
9:3		1	Stop-Rail ●
9:4		1	Handle ●
9:5		3	Screw ●
9:6		3	Washer ●
9:7		1	Screw ●
10	110-6189	1	Switch Kit
10:1		1	Switch ●
10:2		3	Wire Tie ●
10:3		2	Rivet ●

● Not serviced separately

Air Ride Seat Suspension Assembly No. 108-1488

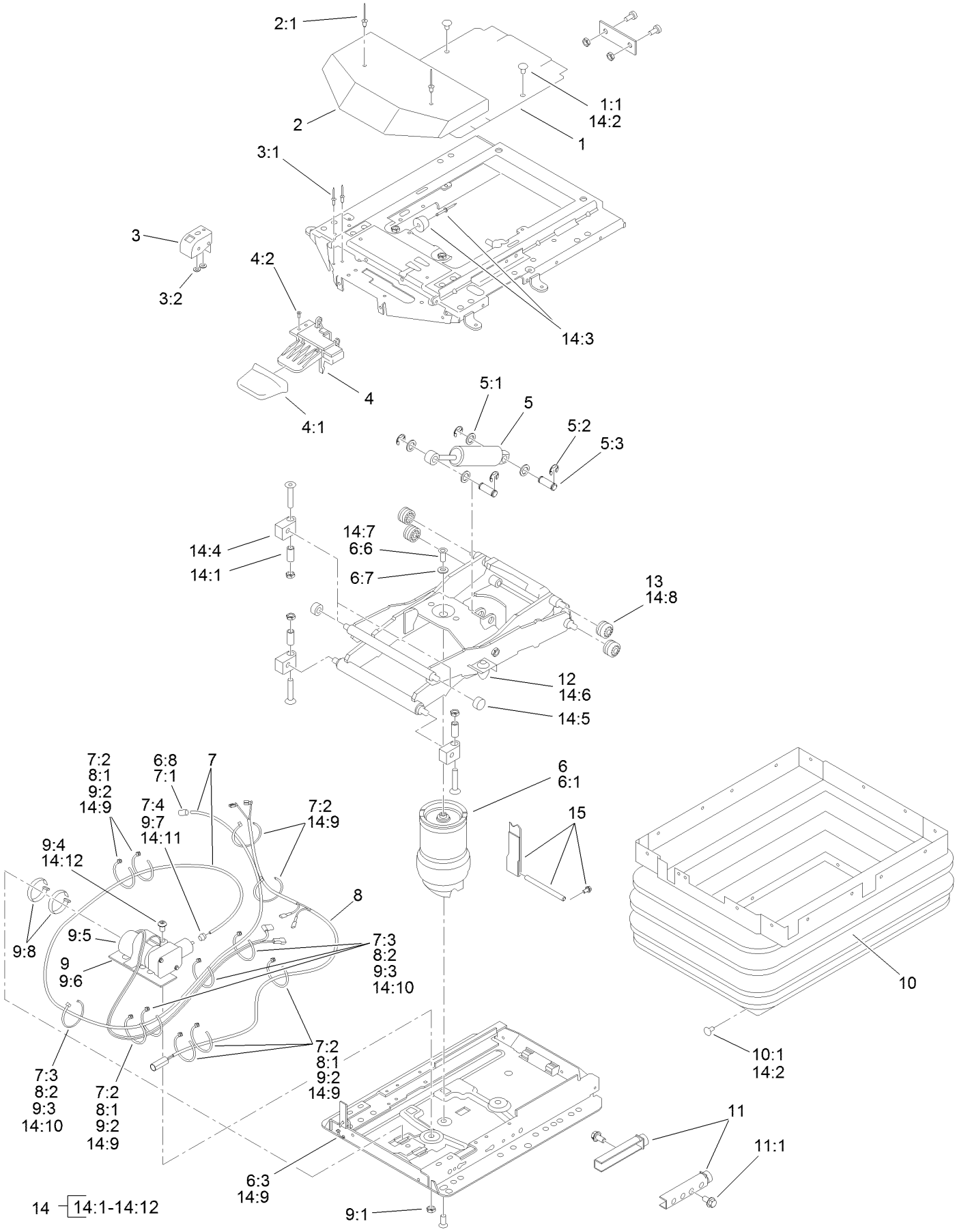

Air Ride Seat Suspension Assembly No. 108-1488 (continued)

Ref.	Part Number	Qty.	Description
1	108-8026	1	Cover ASM
1:1	39-5710	2	Plug-Plastic
2	108-8027	1	Cover ASM
2:1		2	Rivet ■
3	108-8028	1	Level Indicator Kit
3:1		2	Rivet ■
3:2		2	Washer ■
4	108-8029	1	Air Control Valve ASM
4:1		1	Handle ■
4:2		3	Screw ■
5	108-8030	1	Shock Absorber Kit
5:1		4	Washer ■
5:2		4	C-Clip ■
5:3		2	Pin ■
6	108-8031	1	Air Spring Kit
6:1		1	Air Spring ■
6:3		2	Cable Tie ■
6:6		2	Screw ■
6:7		1	Washer ■
6:8		1	Nipple-Hose ■
7	108-8032	1	Air Tube ASM
7:1		1	Nipple-Hose ■
7:2		7	Tie-Wire ■
7:3		4	Tie-Wire ■
7:4		1	Nipple-Hose ■
8	108-8033	1	Connecting Cable ASM
8:1		8	Tie-Wire ■
8:2		4	Tie-Wire ■
9	108-8034	1	Compressor Kit
9:1		1	Nut ■
9:2		5	Tie-Wire ■
9:3		4	Tie-Wire ■
9:4		1	Screw ■
9:5		1	Compressor ■
9:6		1	Plate-Mounting ■
9:7		1	Nipple-Hose ■
9:8		2	Clamp ■
10	108-8035	1	Bellows ASM
10:1	39-5710	23	Plug-Plastic
11	108-8036	1	Stop Kit
11:1		2	Screw ■
12	107-1213	2	Bumper Set
13	108-8037	4	Roller
14	108-8038	1	Wear Parts Kit ●
14:1		4	Spacer ■
14:2	39-5710	2	Plug-Plastic
14:3		1	Bumper ■
14:4		4	Support-Housing ■
14:5		2	Roller ■
14:6	107-1213	2	Bumper Set
14:7		2	Screw ■
14:8	108-8037	4	Roller
14:9		9	Tie-Wire ■
14:10		4	Tie-Wire ■
14:11		1	Nipple-Hose ■
14:12		1	Screw ■
15	119-2161	1	Tether Kit

● Not illustrated

■ Not serviced separately

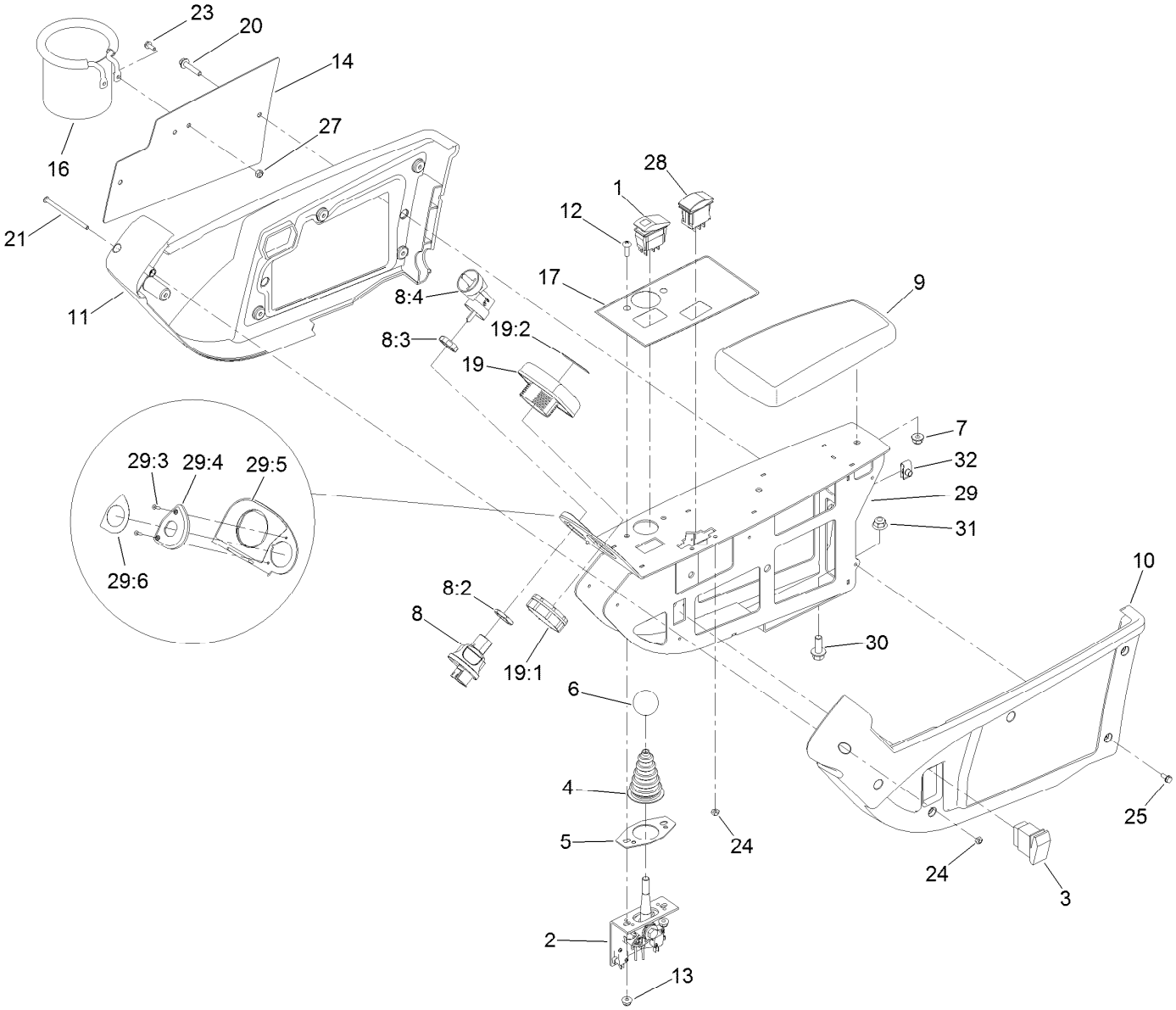

Control Console Assembly

Ref.	Part Number	Qty.	Description
1	105-4232	1	Switch
2	120-5280	1	Joystick Bracket ASM
3	95-8999	1	Switch
4	93-5961	1	Boot-Lever
5	112-9181	1	Plate-Boot
6	233-42	1	Knob
7	104-8300	2	Nut-Flange, NI
8	121-5159	1	Ignition Switch ASM
8:2	121-5160	1	Nut-Hex
8:3	121-5161	1	Nut-Face
8:4	121-5162	1	Ignition Key Set
9	108-7602	1	Rest-Arm
10	108-7604	1	Cover-LH
11	108-7605	1	Cover-RH
12	3258-166	2	Screw-PRH
13	104-7201	2	Nut-HF
14	115-8849-03	1	Plate-Cover
16	117-2378	1	Holder-Bag
17	125-8754	1	Decal-Control Panel

Ref.	Part Number	Qty.	Description
19	120-6310	1	Lcd Display ASM
19:1	120-4630	1	Nut-Display
19:2	120-6311	1	Decal-Display
20	3234-21	2	Screw-HHF
21	3250-22	1	Screw-PPH
23	3290-321	2	Screw-HWH
24	3296-12	1	Nut-Lock, NI
25	32144-112	10	Screw-HWH
27	3296-2	2	Nut-Lock, NI
28	100-1535	1	Switch
29	130-1612	1	Panel ASM
29:3	3269-17	2	Rivet-Pop
29:4	121-3889	1	Step-Elevated, Switch
29:5	121-3887	1	Decal-Console, Display
29:6	121-3884	1	Decal-Console, Upper
30	3234-42	2	Screw-HHF
31	104-8301	2	Nut-Flange, NI
32	107069	2	Clip

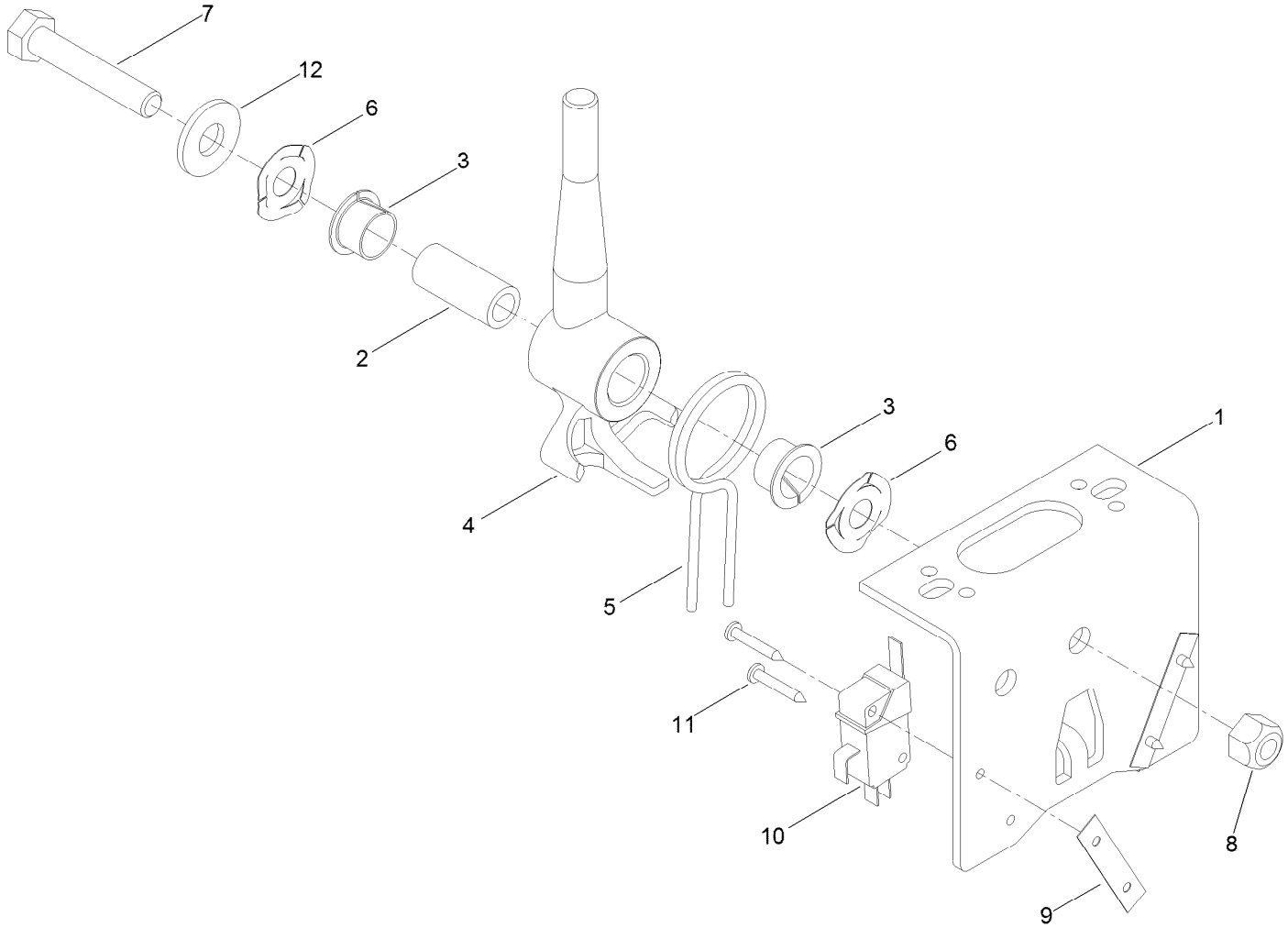

Joystick Bracket Assembly No. 120-5280

Ref.	*Part Number*	*Qty.*	*Description*
1	115-5357-03	1	Bracket-Joystick
2	106-4192	1	Spacer
3	93-5547	2	Bushing-Nylon
4	119-3540	1	Hub-Pivot, Joystick
5	105-8289	1	Spring-Torsion
6	106-4193	2	Washer-Finger, Spring
7	322-9	1	Screw-HH
8	3296-29	1	Nut-Lock, NI
9	3290-354	2	Nut-Speed
10	108-6496	2	Switch (W/Boot)
11	95-3003	4	Screw-PPHTF
12	3256-3	1	Washer-Flat

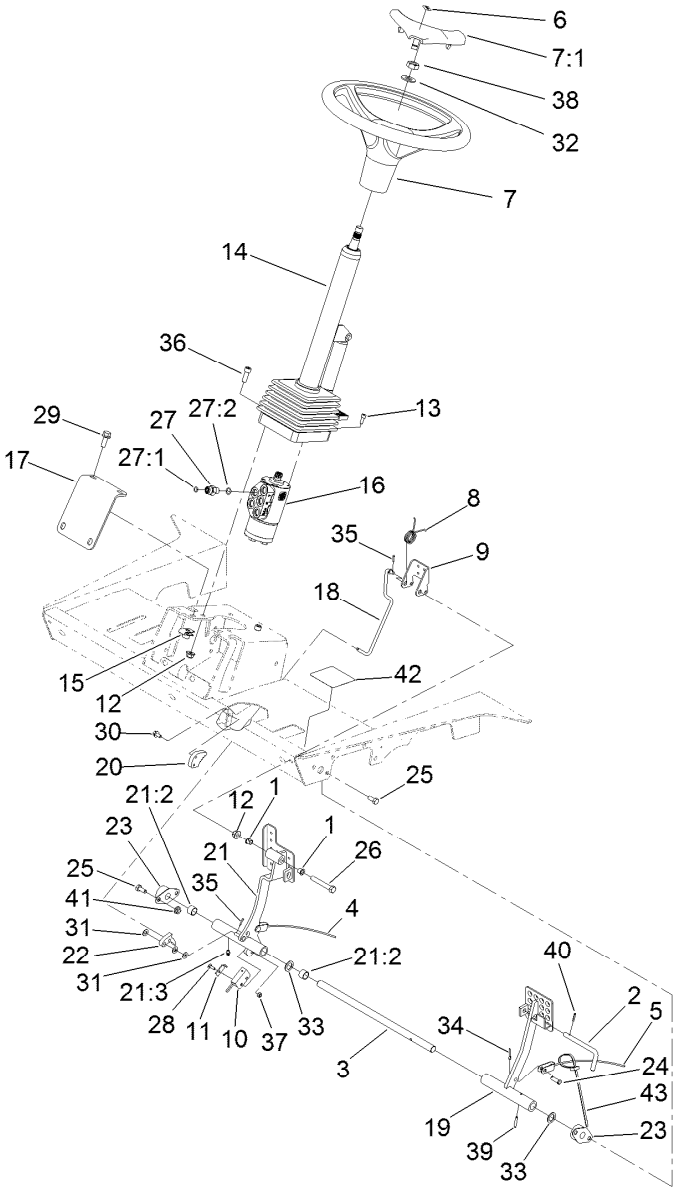

Steering and Pedals Assembly

Ref.	Part Number	Qty.	Description
1	52-2891	2	Bushing-Flanged, Nylon
2	63-7880	1	Pin-Latch, Brake
3	75-1470	1	Pin-Pivot, Brake
4	92-7529	1	Cable-Brake, RH
5	92-7530	1	Cable-Brake, LH
6	98-1459	1	Decal
7	98-1471	1	Wheel-Steering
7:1	98-1468	1	Cover-Wheel, Steering
8	99-7140	1	Spring-Torsion
9	99-7963-03	1	Pedal-Park
10	100-1270	1	Switch-Proximity
11	100-4872	1	Plate-Switch, Neutral
12	104-8301	5	Nut-Flange, NI
13	105-2409	4	Screw-HSH
14	106-3622	1	Steering Tilt Column ASM
15	105-4886	4	Nut-Tinnerman
16	114-8119	1	Steering Valve ASM
17	115-4379-01	1	Brace-Column
18	115-4417	1	Rod-Brake Pawl
19	115-4421-03	1	Pedal-Brake, LH
20	119-0002	1	Pawl-Brake

Ref.	Part Number	Qty.	Description
21	119-0005	1	RH Brake Pedal ASM
21:2	256-42	2	Bushing
21:3	302-5	1	Fitting-Grease
22	120-1691	1	Detent-Brake
23	256-236	2	Bearing-Mount, Flange
24	283-58	2	Pin-Clevis
25	322-3	3	Screw-HH
26	323-12	1	Screw-HH
27	340-2	5	Fitting-HYD, Straight
27:1	237-22	1	O-Ring
27:2	237-42	1	O-Ring
28	3229-34	1	Screw-CARR
29	3234-11	4	Screw-HHF
30	3234-13	2	Screw-HHF
31	3256-22	3	Washer-Flat
32	3256-27	1	Washer-Flat
33	3256-69	3	Washer-Flat
34	3272-10	2	Pin-Cotter
35	3272-5	3	Pin-Cotter
36	3274-7	4	Screw-HSH
37	3296-2	1	Nut-Lock, NI

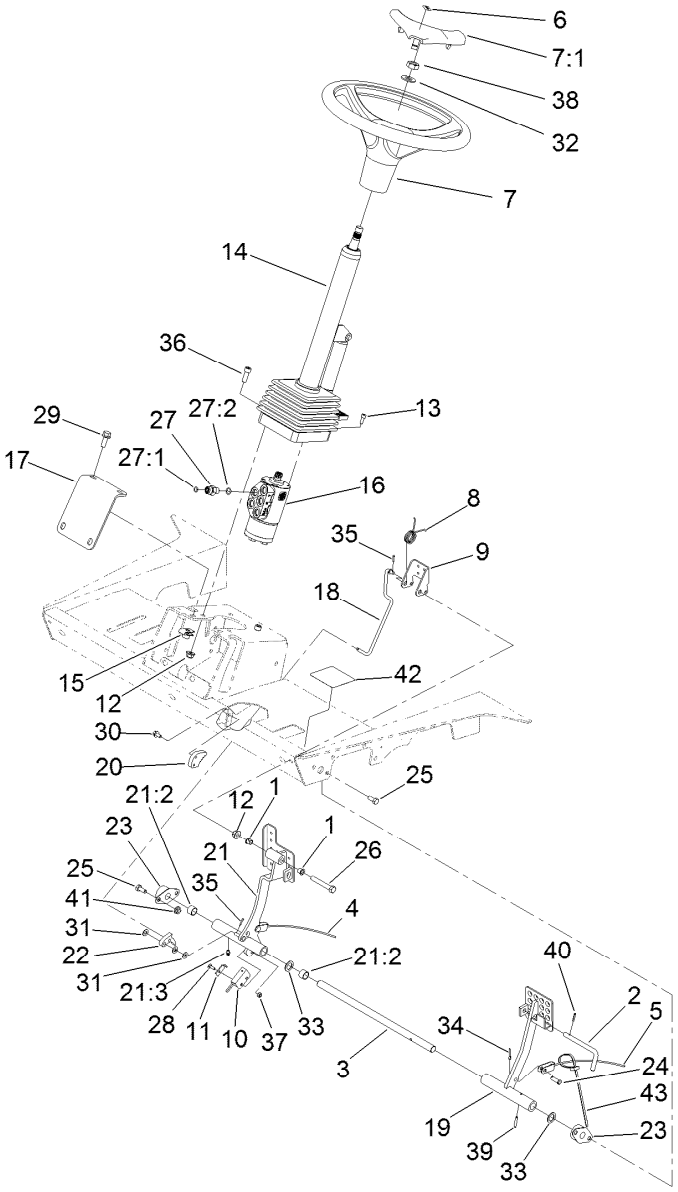

Steering and Pedals Assembly (continued)

Ref.	Part Number	Qty.	Description
38	3296-33	1	Nut-Lock, NI
39	32121-16	1	Pin-Spring
40	32121-50	1	Pin-Spring
41	32128-20	3	Nut-HF
42	117-4763	1	Decal-Brake
43	3290-378	1	Tie-Cable

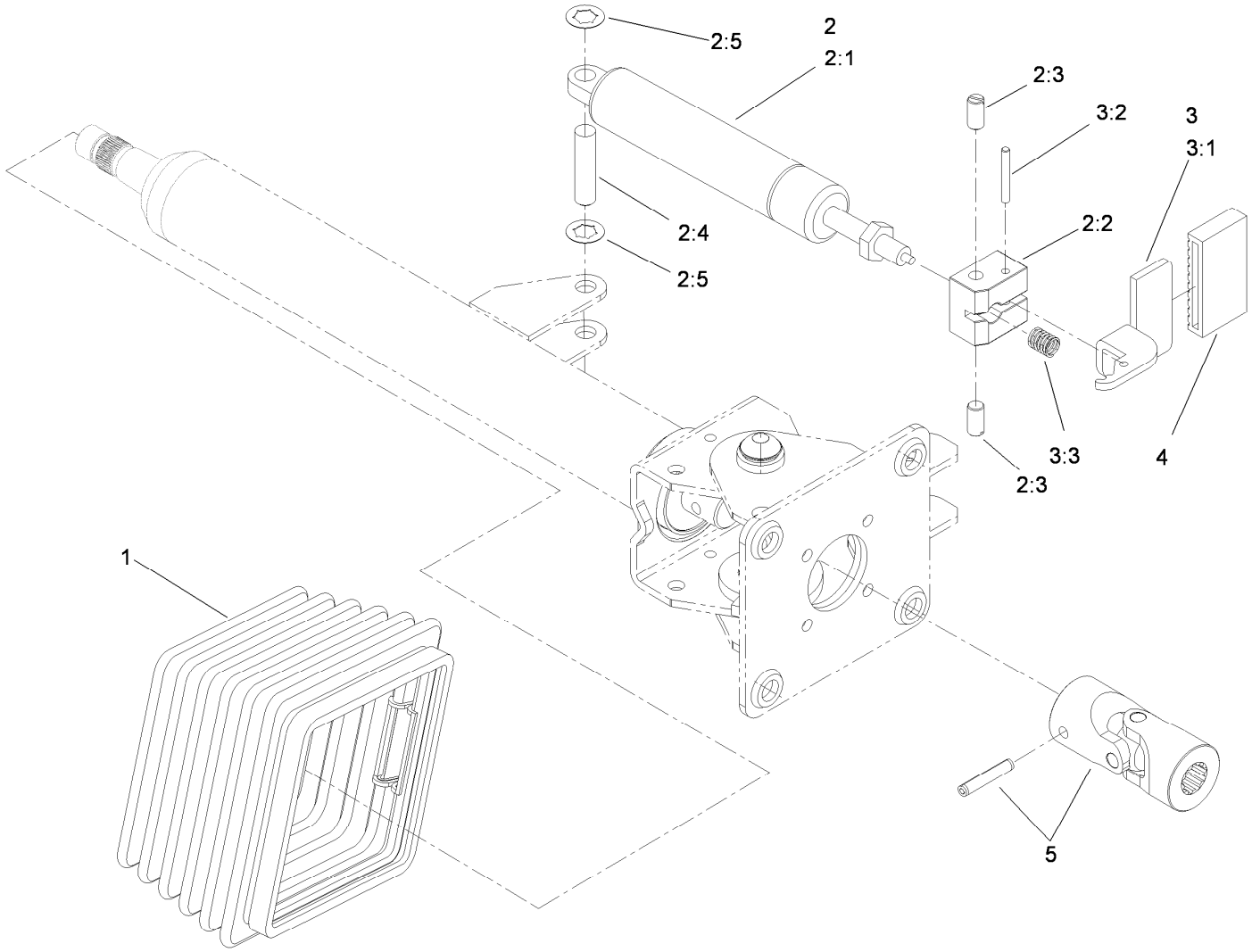

Steering Tilt Column Assembly No. 106-3622

Ref.	*Part Number*	*Qty.*	*Description*
1	110-6462	1	Bellows-Rubber
2	110-6463	1	Cylinder Service Kit
2:1		1	Cylinder-Gas ●
2:2		1	Block-Pedal ●
2:3		2	Bolt ●
2:4		1	Pin ●
2:5		2	Washer-Lock ●
3	110-6464	1	Pedal Service Kit
3:1		1	Pedal ●
3:2		1	Pin ●
3:3		1	Spring ●
4	110-6465	1	Cover-Pedal
5	120-6256	1	Universal Joint Kit

● Not serviced separately

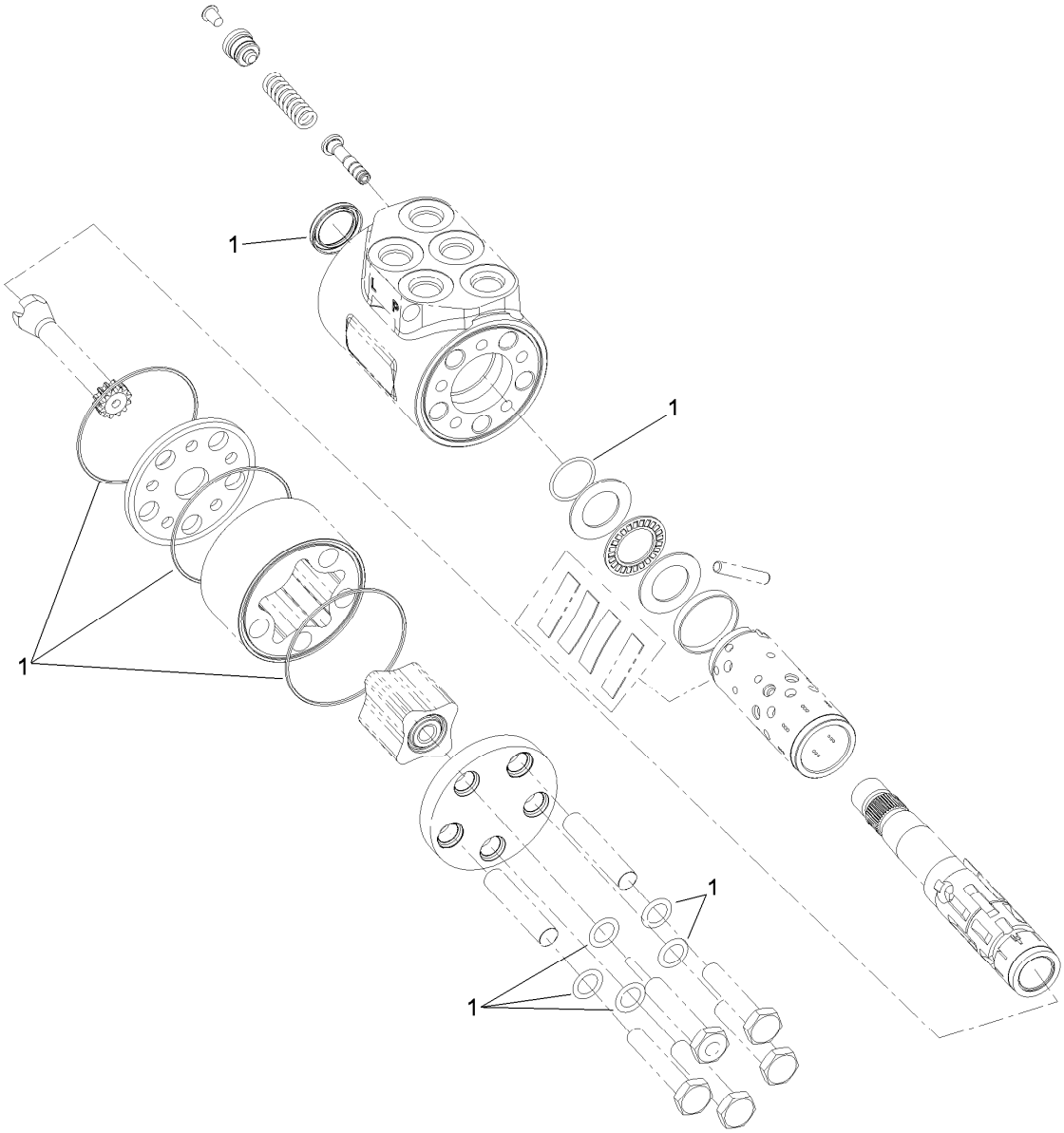

Steering Valve Assembly No. 114-8119

Ref.	*Part Number*	*Qty.*	*Description*
1	106-6716	1	Seal Kit

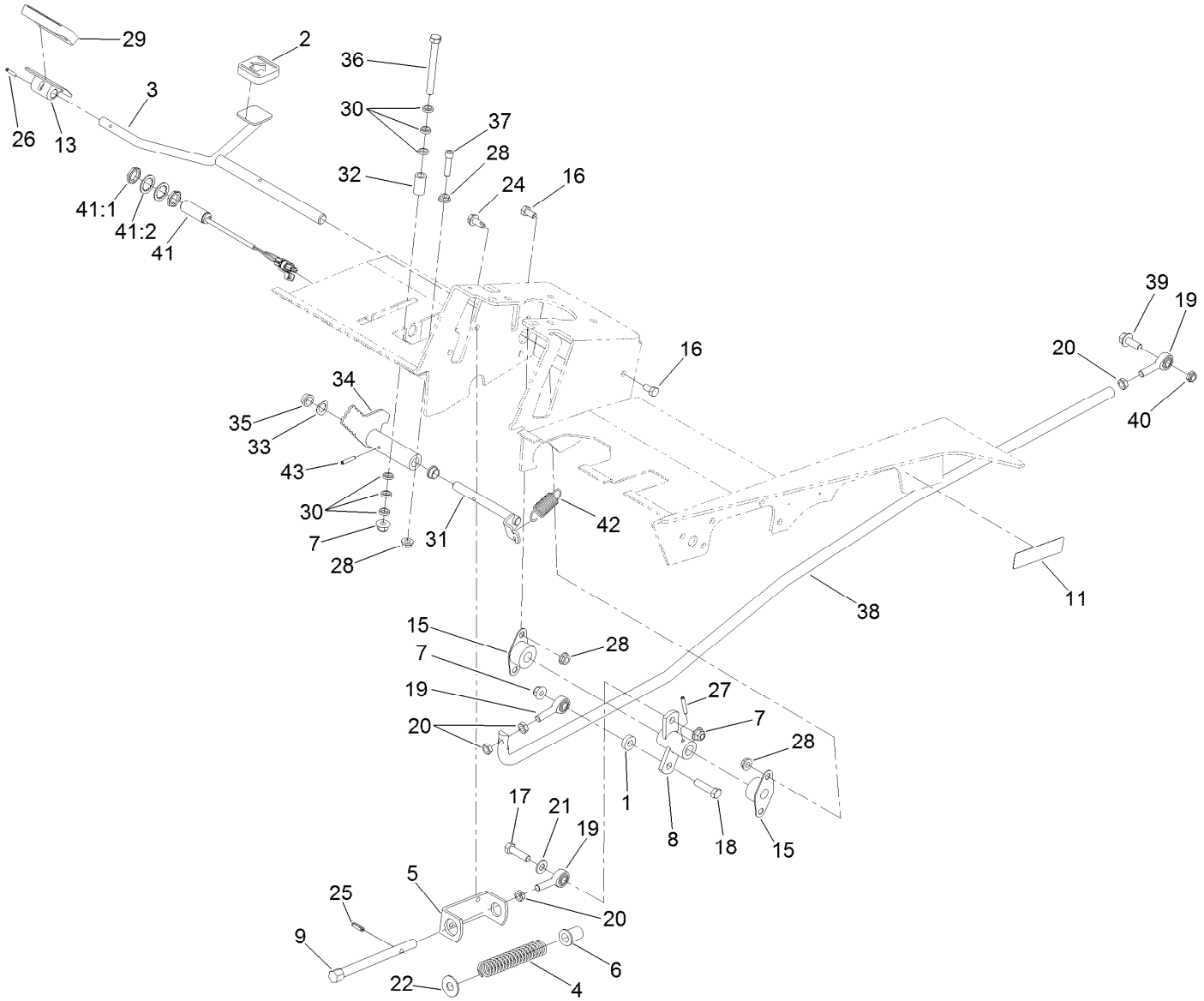

Forward/Reverse Pedal Assembly

Ref.	Part Number	Qty.	Description
1	5-0652	1	Spacer
2	74-9110	1	Pad-Pedal, Reverse
3	75-2970	1	Pedal-Traction
4	84-9100	1	Spring
5	92-7608-03	1	Bracket-Spring
6	92-7610	1	Retainer-Spring
7	104-8301	3	Nut-Flange, NI
8	115-4380-03	1	Hub-Pivot, Traction
9	115-4383	1	Shaft-Spring
11	117-2718	1	Decal-Arrester, Spark
13	117-9507	1	Pedal-Accelerator
15	256-236	2	Bearing-Mount, Flange
16	322-2	4	Screw-HH
17	323-29	1	Screw-HH
18	323-8	1	Screw-HH
19	2411-36	3	Bearing-End, Rod
20	3220-3	4	Nut-HJ
21	3256-24	1	Washer-Flat
22	3256-5	1	Washer-Flat
24	32104-32	2	Screw-HWH
25	32121-11	1	Pin-Roll

Ref.	Part Number	Qty.	Description
26	32121-45	1	Pin-Spring
27	32121-6	1	Pin-Roll, Slotted
28	32128-20	6	Nut-HF
29	74-9100	1	Pad-Pedal, Forward
30	62-4420	6	Washer
31	106-3731	1	Rod-Pivot
32	110-4631	1	Tube-Spacer
33	110-8982	1	Washer-Spring
34	117-0216	1	Stop-Mow
35	256-156	2	Bushing-Flange
36	323-15	1	Screw-HH
37	3274-18	1	Screw-HSH
38	130-1634-03	1	Rod-Traction
39	3234-11	1	Screw-HHF
40	3296-59	1	Nut-Lock, NI
41	115-5300	1	Proximity Switch ASM
41:1	117-3207	2	Nut-Hex
41:2	117-3208	2	Washer-Lock, Internal Tooth
42	92-7305	1	Spring-Extension
43	32121-16	1	Pin-Spring

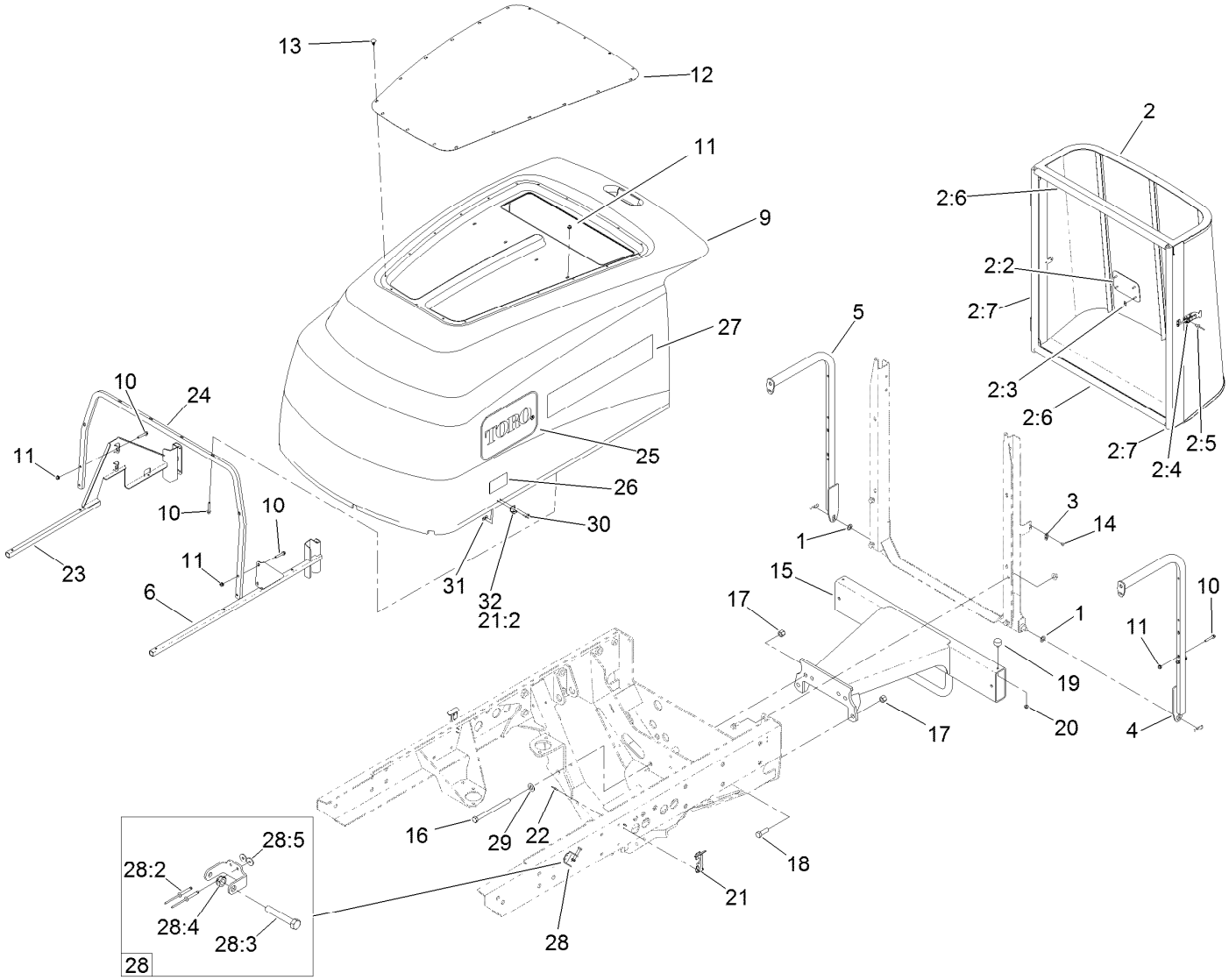

Hood Assembly

Ref.	Part Number	Qty.	Description
1	98-1629	2	Washer
2	115-4362	1	Screen ASM
2:2	93-6028	1	Plate-Logo
2:3	94-2638	4	Nut-Tinnerman
2:4	114-8117	1	Latch-Adjustable
2:5	3269-3	2	Rivet-Pop
2:6	115-4358	2	Seal-Bulb
2:7	115-4359	2	Seal-Bulb
3	115-4357	1	Latch-Keeper
4	114-8109-03	1	Tube-LH
5	114-8108-03	1	Tube-RH
6	114-8102-03	1	Tube
9	121-3108	1	Hood ASM
10	94-5781	26	Screw-HHF
11	104-7201	26	Nut-HF
12	114-4192-03	1	Screen-Hood
13	117-2382	20	Plug-Plastic
14	3269-3	2	Rivet-Pop
15	120-8020-03	1	Bumper-Rear
16	325-33	2	Screw-HH
17	3296-23	4	Nut-Lock, NI

Ref.	Part Number	Qty.	Description
18	325-6	2	Screw-HH
19	240-14	2	Bumper-Rubber
20	32128-33	2	Nut-HF
21	59-9740	2	Flex Draw Latch ASM
21:2	249-40	1	Keeper
22	3290-55	4	Rivet-Pop
23	121-3136-03	1	Tube-RH
24	121-3133-03	1	Tube-Hood Frame
25	66-1210	2	Decal
26	106-6754	2	Decal-Danger
27	119-3942	2	Decal
28	119-2004	1	Ce Latch Kit
28:2	107-0333	2	Rivet-Pop
28:3	322-10	1	Screw-HH
28:4	3296-47	1	Nut-Lock, NI
28:5	3269-10	2	Washer-Back
29	3256-26	2	Washer-Flat
30	3269-17	4	Rivet-Pop
31	3269-10	4	Washer-Back
32	249-40	1	Keeper

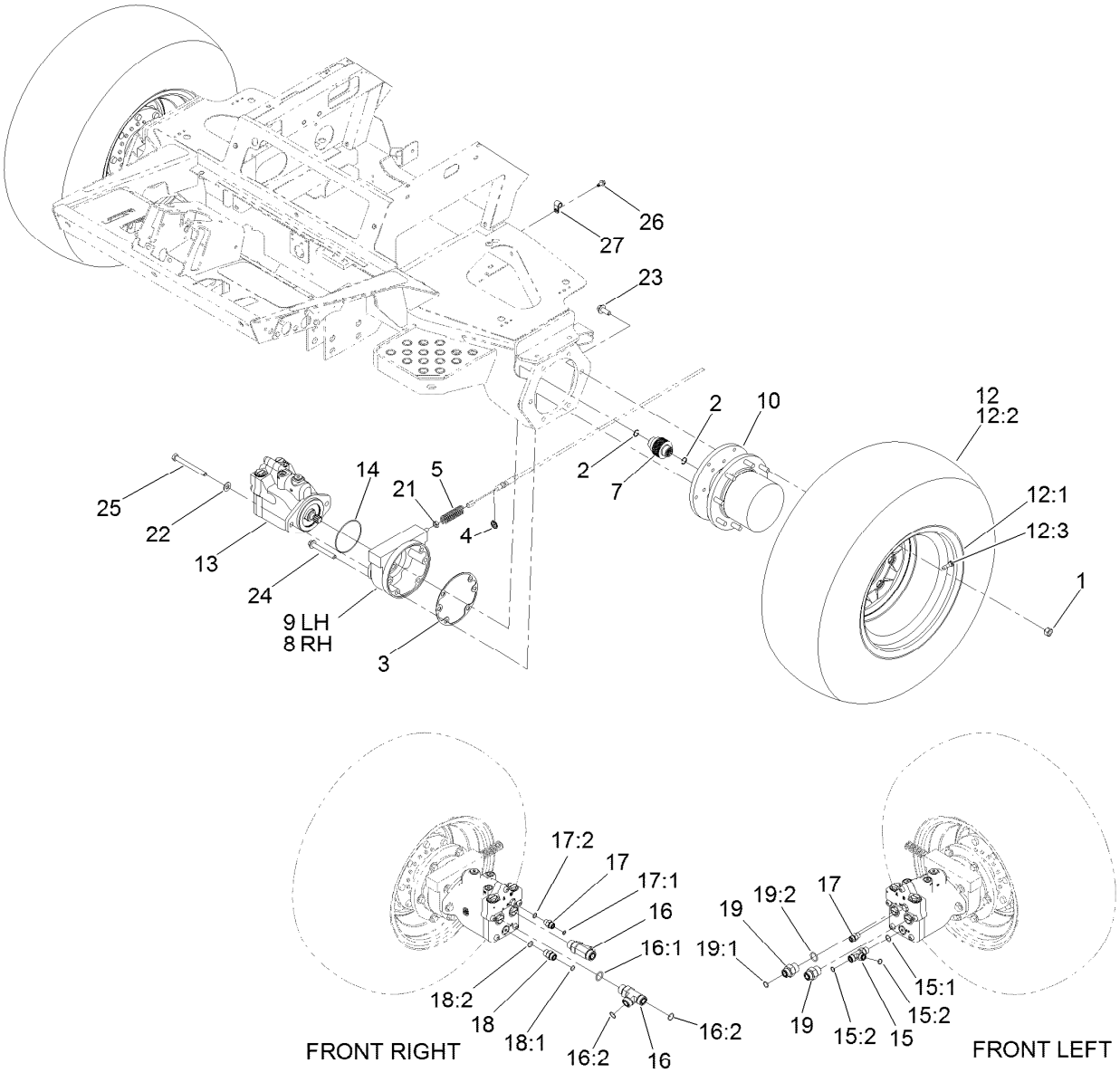

Front Traction Assembly

Ref.	Part Number	Qty.	Description
1	92-7483	16	Nut-Lug
2	93-7972	4	Ring-Retaining, Internal
3	93-7984	2	Gasket
4	94-3050	2	Plate-Spring
5	94-3088	2	Spring-Compression
7	100-3046	2	Shaft-Brake, Splined
8	100-3069	1	RH Brake ASM
9	100-3070	1	LH Brake ASM
10	105-4500	2	Planetary ASM
12	119-1538	2	Tire And Wheel ASM
12:1	119-1540	1	Wheel-15 Inch
12:2	63-4480	1	Tire
12:3	232-24	1	Stem-Valve
13	121-3100	2	HYD Piston Motor ASM
14	237-166	2	O-Ring
15	340-109	1	Fitting-HYD, Tee
15:1	237-79	1	O-Ring
15:2	237-30	2	O-Ring
16	340-148	2	Fitting-Tee

Ref.	Part Number	Qty.	Description
16:1	237-81	1	O-Ring
16:2	237-58	2	O-Ring
17	340-2	2	Fitting-HYD, Straight
17:1	237-22	1	O-Ring
17:2	237-42	1	O-Ring
18	340-4	1	Fitting-HYD, Straight
18:1	237-30	1	O-Ring
18:2	237-79	1	O-Ring
19	340-8	2	Adapter
19:1	237-65	1	O-Ring
19:2	237-81	1	O-Ring
21	3218-4	2	Nut-Jam
22	106-9888	4	Washer-Flat
23	33106-030	12	Screw-HHF
24	33106-090	8	Screw-HHF
25	33116-120	4	Screw-HH
26	32104-32	2	Screw-HWH
27	2412-93	2	Clamp-R

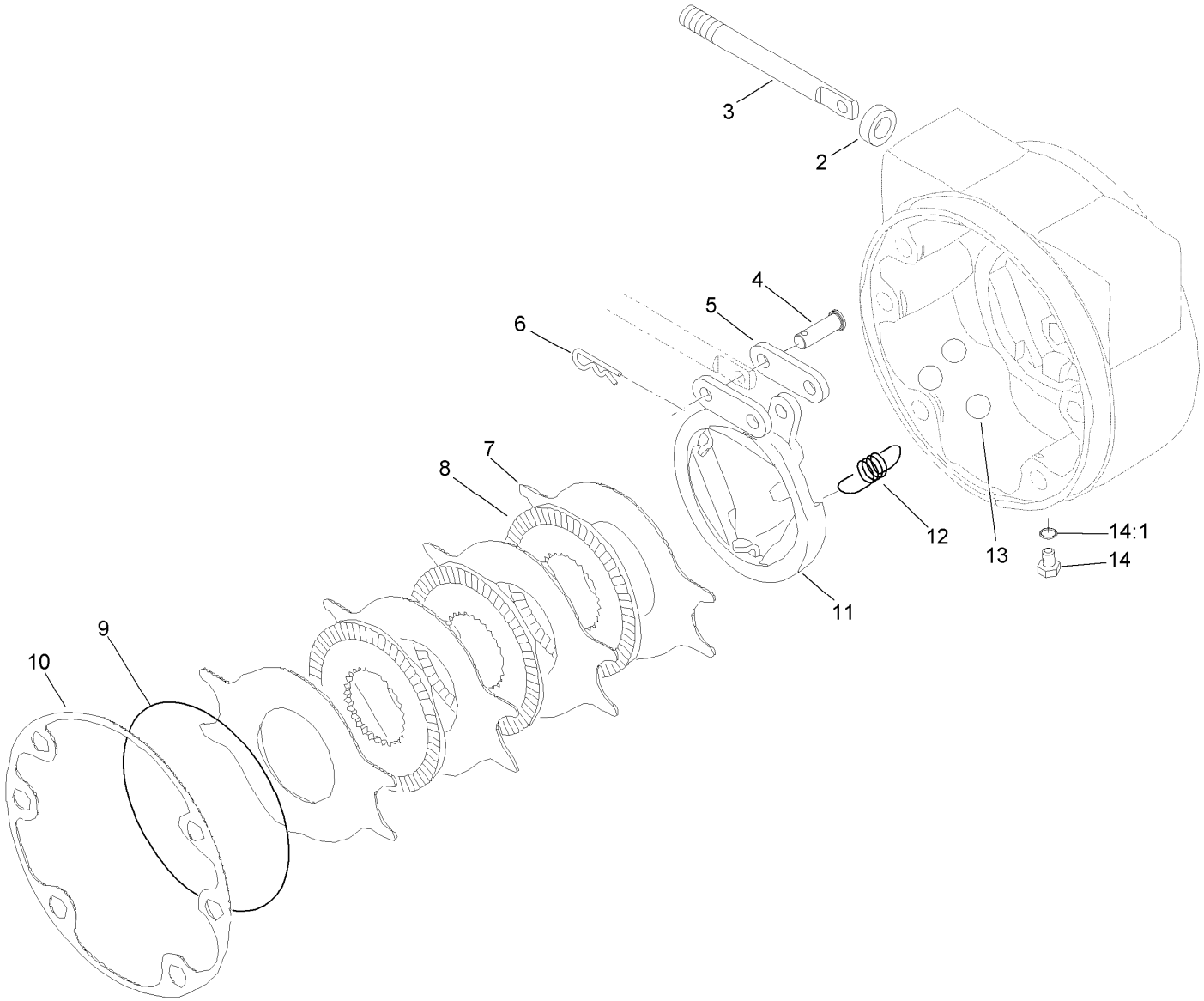

RH Brake Assembly No. 100-3069

Ref.	*Part Number*	*Qty.*	*Description*
2	93-7977	1	Seal
3	93-7978	1	Rod-Pull
4	93-7983	2	Pin-Clevis
5	93-7980	2	Link
6	93-7979	2	Pin-Hitch
7	93-7986	4	Disc-Stationary
8	104-4278	3	Disc-Rotating
9	93-7976	1	Ring-Retaining
10	93-7984	1	Gasket
11	104-4280	1	Actuator-Rotating
12	93-7987	3	Spring-Extension
13	93-7985	3	Ball
14	353-990	2	Plug ASM
14:1	237-78	1	O-Ring

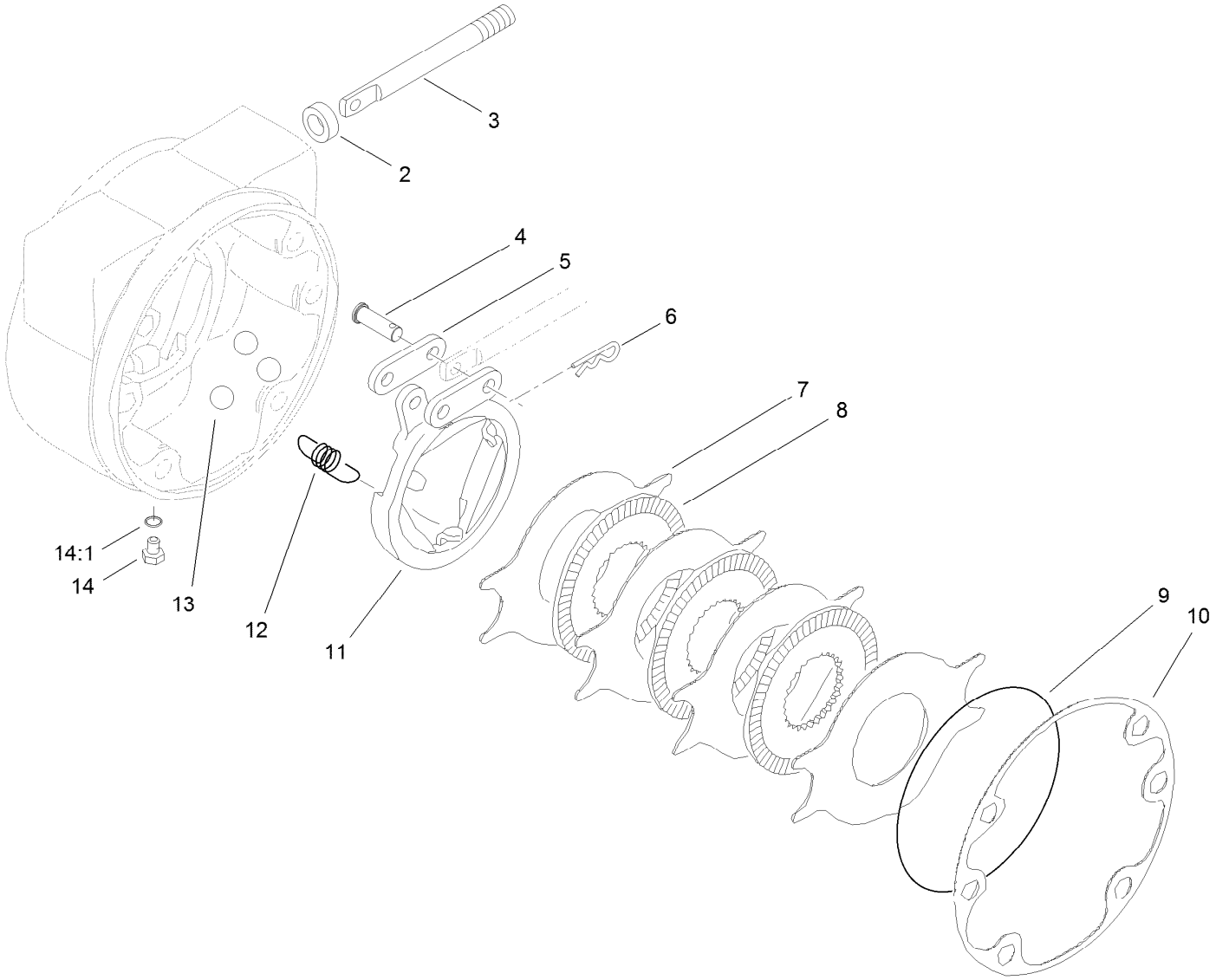

LH Brake Assembly No. 100-3070

Ref.	Part Number	Qty.	Description
2	93-7977	1	Seal
3	93-7978	1	Rod-Pull
4	93-7983	2	Pin-Clevis
5	93-7980	2	Link
6	93-7979	2	Pin-Hitch
7	93-7986	4	Disc-Stationary
8	104-4278	3	Disc-Rotating
9	93-7976	1	Ring-Retaining
10	93-7984	1	Gasket
11	104-4279	1	Actuator-Rotating
12	93-7987	3	Spring-Extension
13	93-7985	3	Ball
14	353-990	2	Plug ASM
14:1	237-78	1	O-Ring

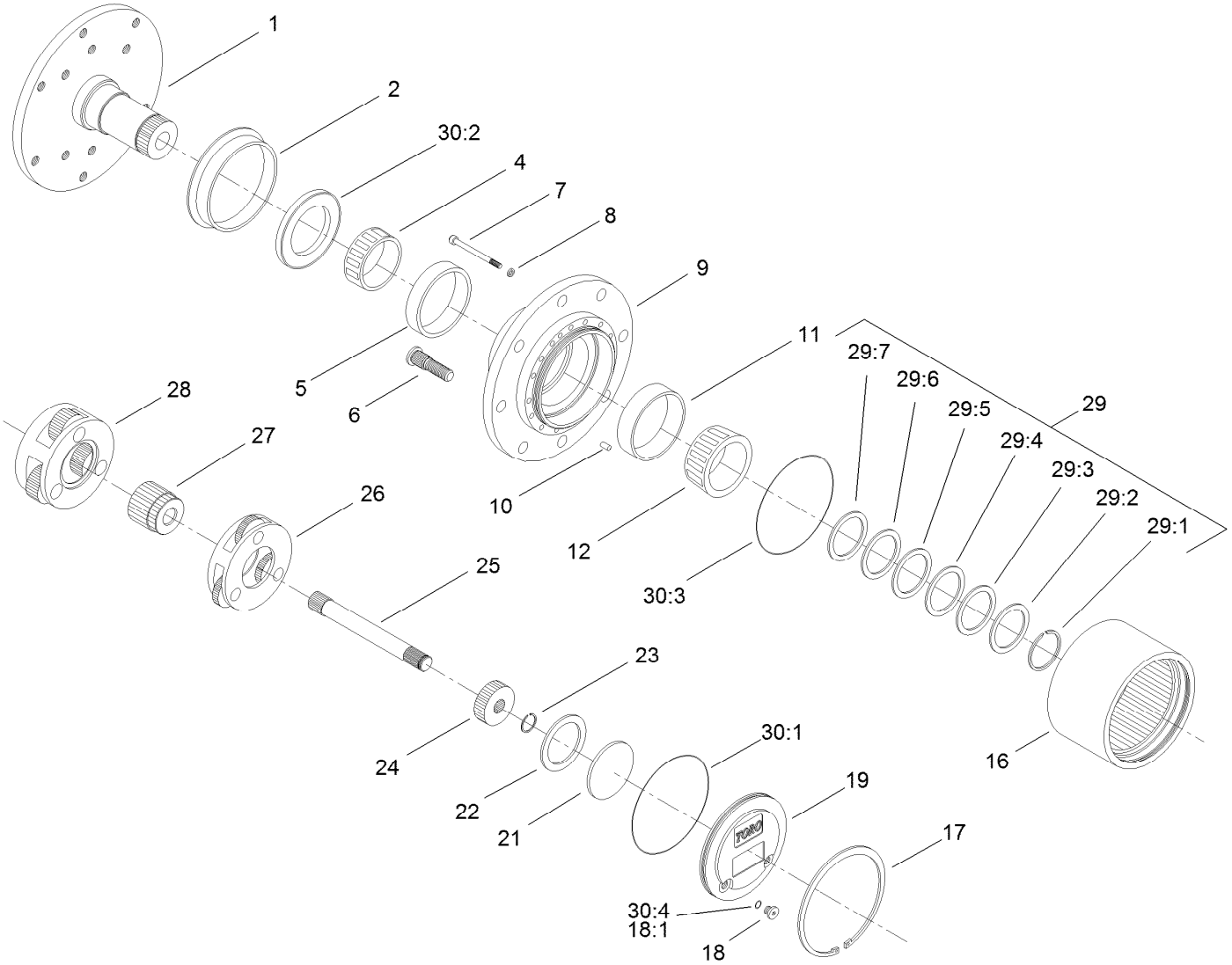

Planetary Assembly No. 105-4500-03

Ref.	Part Number	Qty.	Description
1		1	Spindle ■
2	105-8122	1	Seal-Boot
4	105-8120	1	Bearing-Cone
5	105-8119	1	Bearing-Cup
6	105-8124	8	Stud-Wheel
7	105-8125	16	Bolt-Head, Socket
8	3253-18	16	Washer-Lock
9		1	Housing ■
10	105-8121	1	Pin-Dowel
11	105-8117	1	Bearing-Cup
12	105-8118	1	Bearing-Cone
16	105-8113	1	Gear-Ring
17	105-8132	1	Ring-Retaining
18	353-990	2	Plug ASM
18:1	237-78	1	O-Ring
19	105-8138	1	Cap-End
21	105-8133	1	Plug-Thrust
22	105-8123	1	Washer-Thrust
23	105-8131	1	Ring-Retaining

● Not illustrated

Ref.	Part Number	Qty.	Description
24	105-8114	1	Gear-Primary
25	105-8115	1	Shaft-Drive
26	105-8129	1	Primary Carrier ASM
27	105-8139	1	Gear-Secondary
28	105-8130	1	Secondary Carrier ASM
29	105-8136	1	Shim Kit
29:1		1	Ring-Snap ■
29:2		1	Shim-Bearing, 2.9Mm ■
29:3		1	Shim-Bearing, 2.8Mm ■
29:4		1	Shim-Bearing, 2.7Mm ■
29:5		1	Shim-Bearing, 2.6Mm ■
29:6		1	Shim-Bearing, 2.5Mm ■
29:7		1	Shim-Bearing, 2.4Mm ■
30	105-8137	1	Seal Kit ●
30:1		1	O Ring-Flange Cap ■
30:2		1	Seal-Oil ■
30:3		2	O Ring-End Cap ■
30:4	237-78	2	O-Ring

■ Not serviced separately

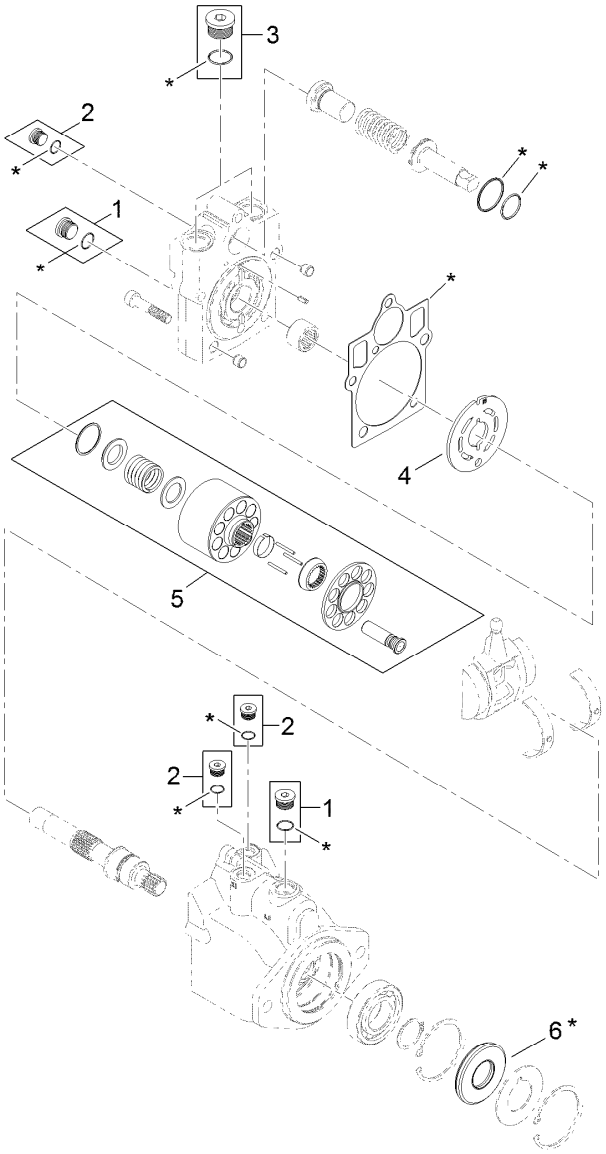

7 = all items with * are included in overhaul seal kit

Hydraulic Piston Motor Assembly No. 121-3100

Ref.	*Part Number*	*Qty.*	*Description*
1	67-9090	2	Plug ASM
2	69-3080	3	Plug
3	107-4352	1	Plug
4	121-1734	1	Plate-Valve
5	121-1735	1	Cylinder Block Kit
6	69-3190	1	Seal-Lip
7	121-1736	1	Overhaul Seal Kit

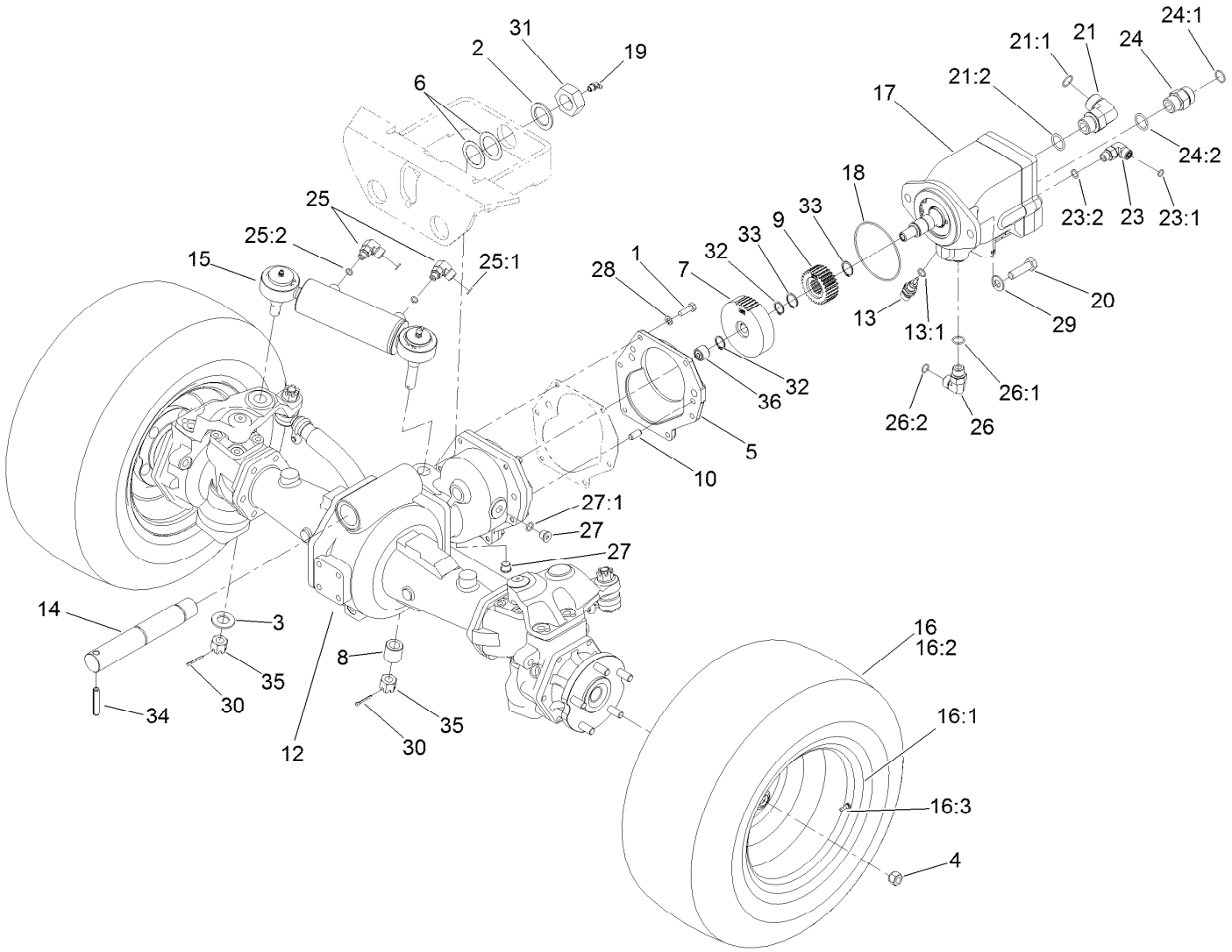

Rear Traction Assembly

Ref.	Part Number	Qty.	Description
1	33114-025	6	Screw-HH
2	92-1765	1	Washer-Thrust
3	92-5836	1	Washer
4	93-5268	10	Nut-Lug
5	95-7541	1	Plate-Cover
6	98-3867	2	Washer-Thrust
7	104-5664	1	Gear-44T
8	100-3796	1	Spacer-Joint, Ball
9	104-5663	1	Pinion-28T
10	104-2353	1	Pin-Dowel
12	110-4750	1	Drive Axle ASM
13	110-8829	1	Sender-Temperature
13:1	237-42	1	O-Ring
14	115-9142	1	Pin-Rear Axle
15	119-3903	1	Steer Cylinder ASM
16	120-1666	2	Tire ASM
16:1	115-1573	1	Rim
16:2	117-5125	1	Tire
16:3	232-27	1	Stem-Valve
17	121-3101	1	Motor-Piston
18	237-166	1	O-Ring

Ref.	Part Number	Qty.	Description
19	302-33	1	Fitting-Grease
20	325-7	2	Screw-HH
21	340-142	1	Fitting-HYD, 90 DEG
21:1	237-58	1	O-Ring
21:2	237-81	1	O-Ring
23	340-77	1	Fitting-HYD, 90 DEG
23:1	237-22	1	O-Ring
23:2	237-42	1	O-Ring
24	340-9	1	Fitting-HYD, Straight
24:1	237-58	1	O-Ring
24:2	237-81	1	O-Ring
25	340-97	2	Fitting-HYD, 90 DEG
25:1	237-22	1	O-Ring
25:2	237-78	1	O-Ring
26	340-98	1	Fitting-HYD, 90 DEG
26:1	237-79	1	O-Ring
26:2	237-30	1	O-Ring
27	353-989	2	Plug-Hex, Hollow
27:1	237-42	1	O-Ring
28	3253-4	6	Washer-Lock
29	106-9888	2	Washer-Flat

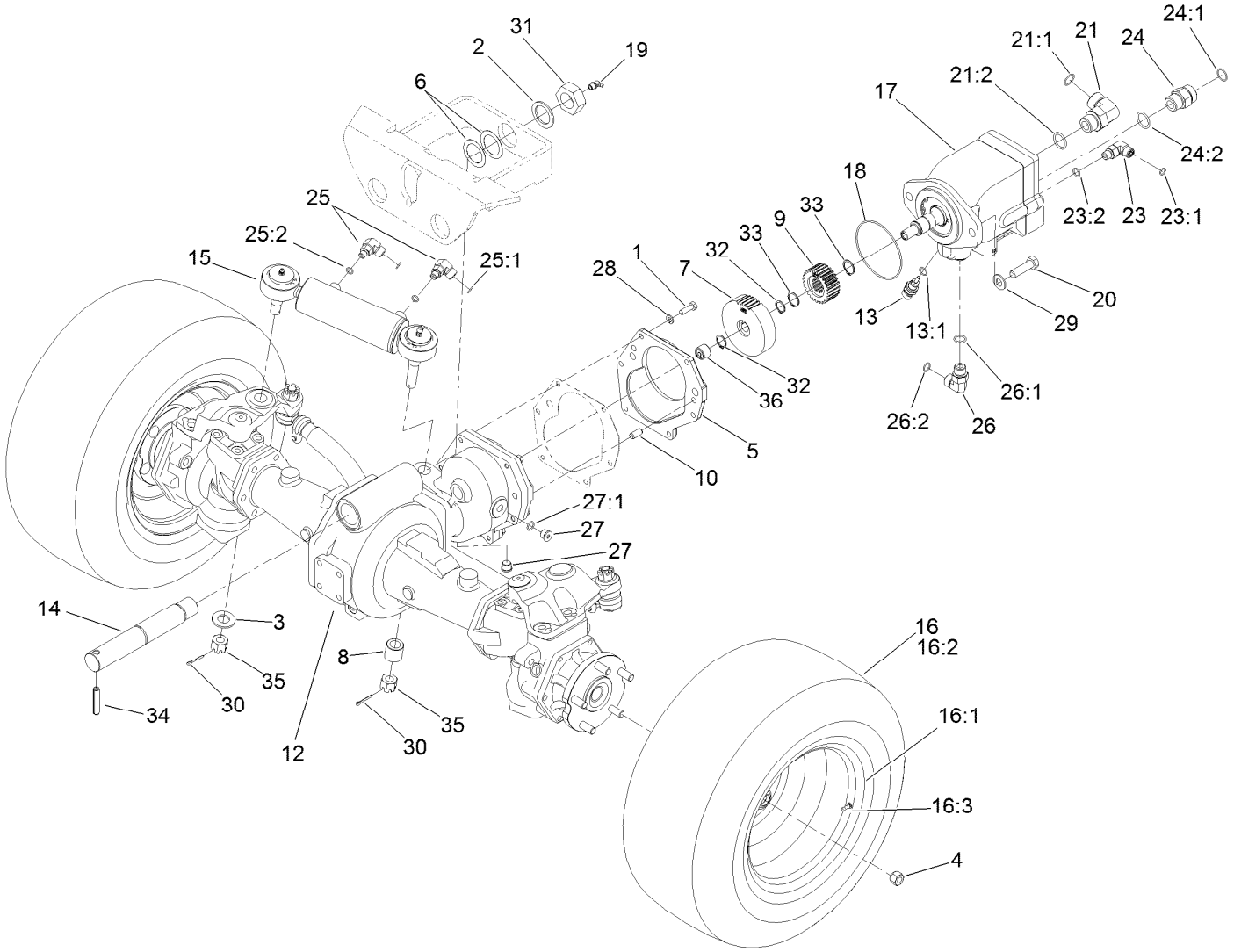

Rear Traction Assembly (continued)

Ref.	Part Number	Qty.	Description
30	3272-11	2	Pin-Cotter
31	3296-68	1	Nut-Lock, NI
32	32120-15	2	Ring-Snap, EXT
33	32120-76	2	Ring-Snap, EXT
34	32121-110	1	Pin-Roll, Slotted
35	32136-14	2	Nut-SHH
36	74-5700	1	Bearing-Needle, Roller

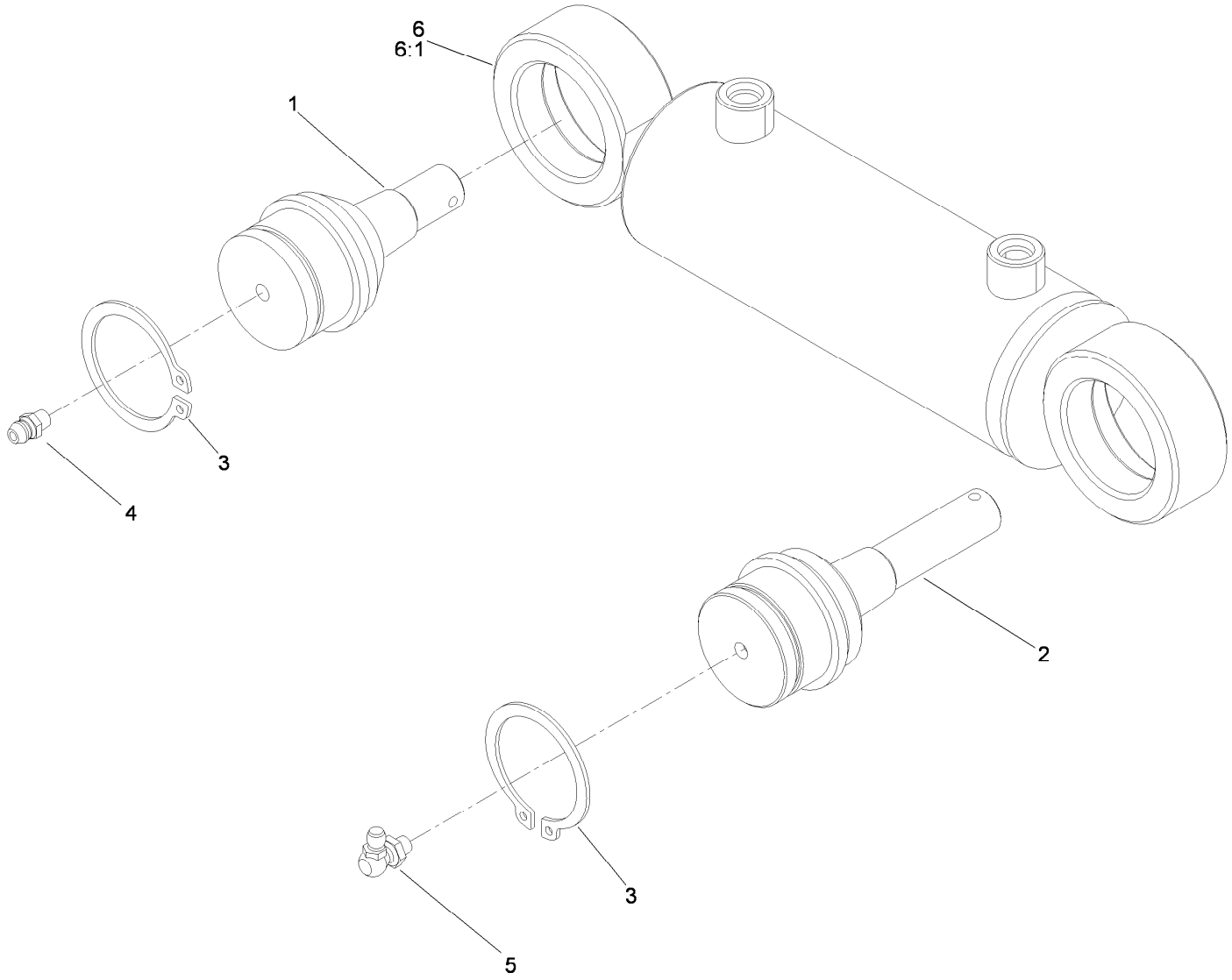

Steer Cylinder Assembly No. 119-3903

Ref.	*Part Number*	*Qty.*	*Description*
1	106-6774	1	Joint-Ball
2	100-3795	1	Joint-Ball
3	32151-104	2	Ring-Retaining, External
4	302-5	1	Fitting-Grease
5	302-60	1	Fitting-Grease
6	125-1661	1	Cylinder-HYD
6:1	125-1681	1	Cylinder Repair Kit ●

● Not illustrated

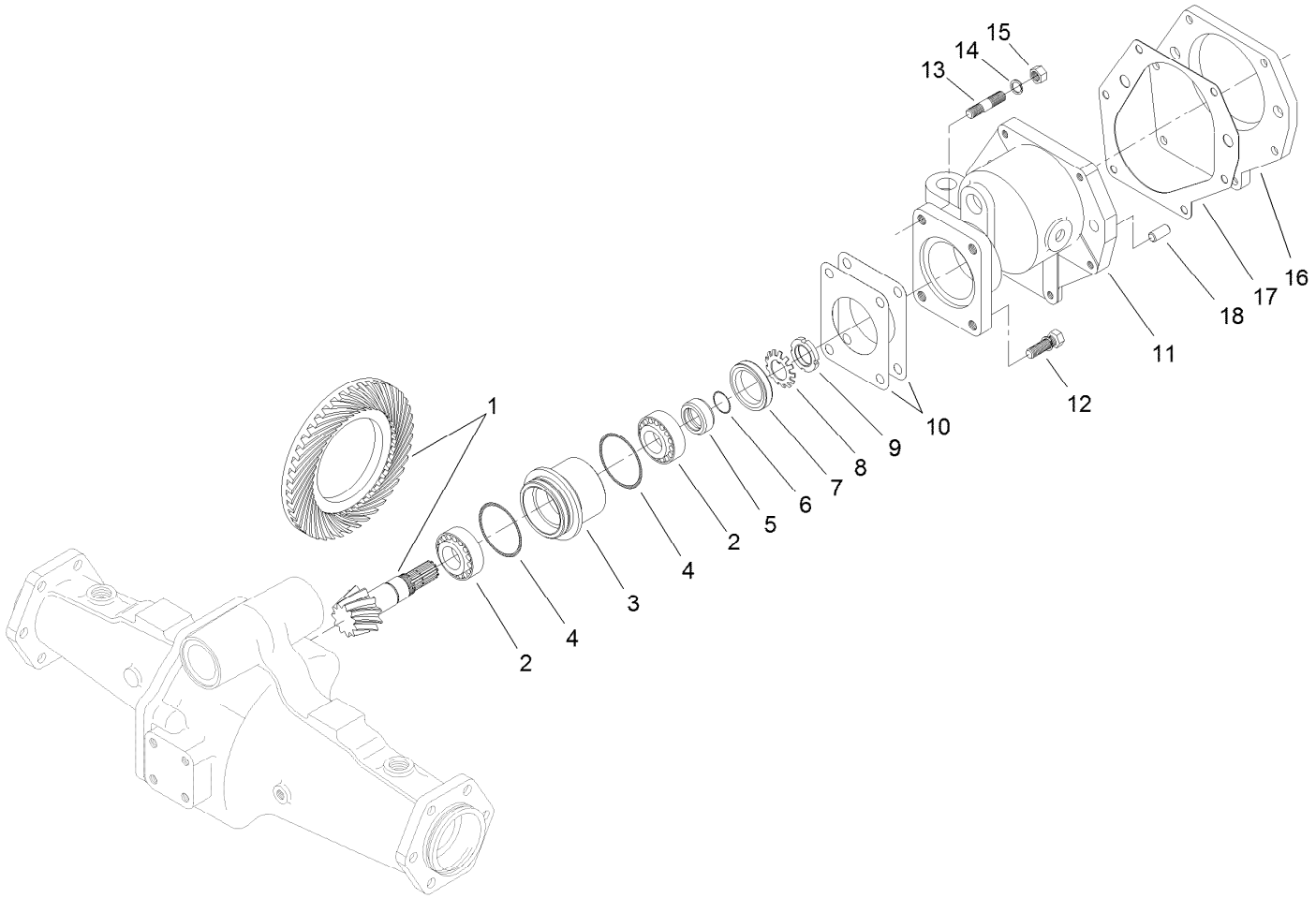

Bevel Pinion Shaft Assembly
Rear Axle Assembly No. 110-4750

Ref.	Part Number	Qty.	Description
1	106-1093	1	Ring And Pinion, Matched Set
2	99-7570	2	Bearing-Roller, Taper
3	95-7534	1	Case-Bearing
4	106-1065	2	O-Ring
5	99-7572	1	Collar-Seal, Oil
6	106-1066	1	O-Ring
7	99-7574	1	Seal-Oil
8	99-7559	1	Washer-Lock
9	99-7560	1	Nut-Lock

Ref.	Part Number	Qty.	Description
10	99-7550	2	Shim 0.1
10	99-7551	2	Shim 0.2
11	95-7533	1	Case-Gear
12	99-7575	2	Bolt
13	98-7735	2	Stud
14	99-7527	2	Washer-Spring
15	99-7526	2	Nut
16	95-7541	1	Plate-Cover
17	106-1140	1	Gasket
18	104-2353	2	Pin-Dowel

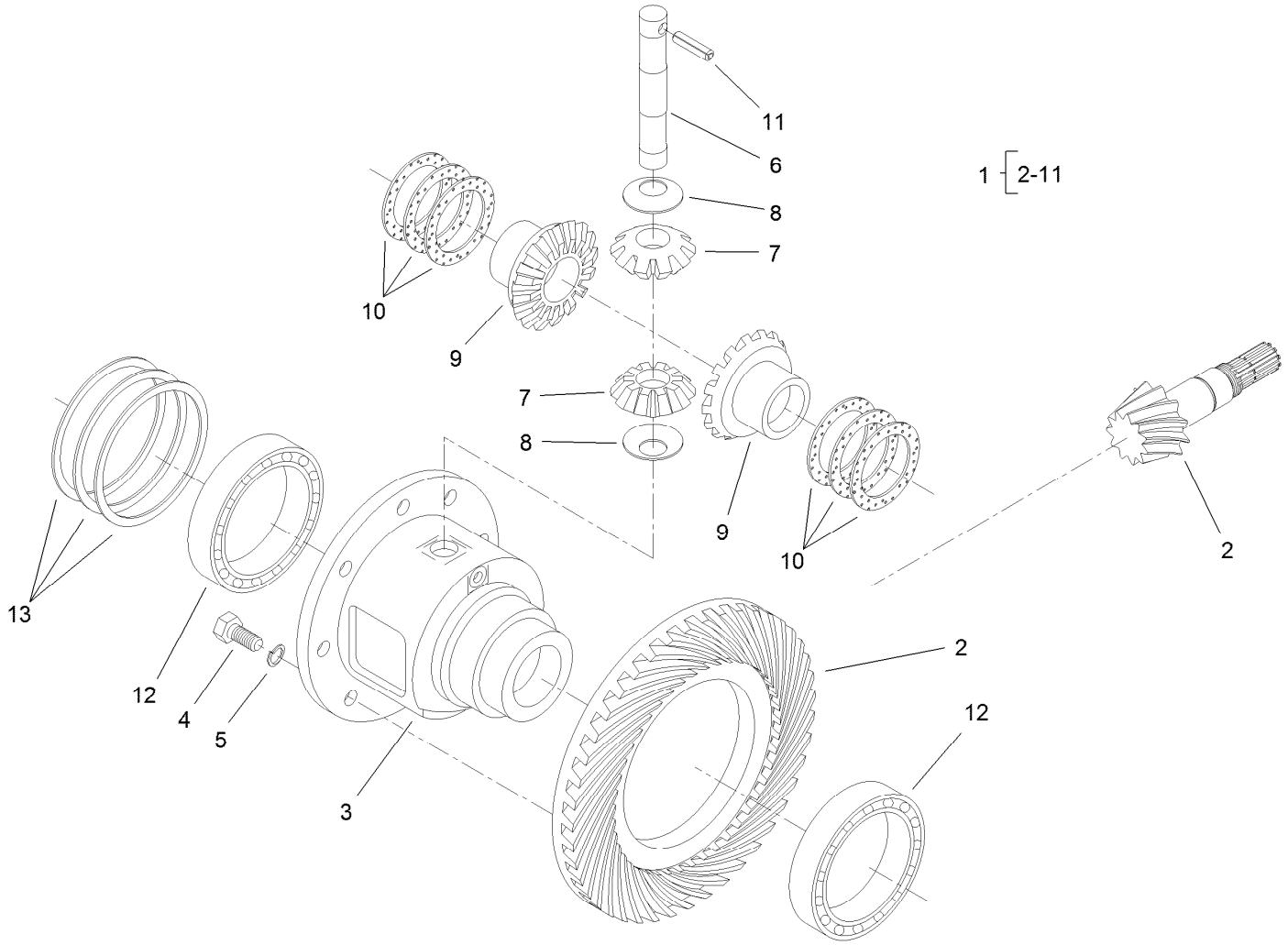

Differential Assembly
Rear Axle Assembly No. 110-4750

Ref.	Part Number	Qty.	Description
1	95-7503	1	Differential ASM
2	106-1093	1	Ring And Pinion, Matched Set
3	95-7502	1	Case-Differential
4	99-7576	8	Bolt
5	3253-4	8	Washer-Lock
6	99-7578	1	Shaft-Differential
7	99-7579	2	Pinion-Differential
8	99-7580	2	Washer-Differential

Ref.	Part Number	Qty.	Description
9	99-7581	2	Gear-Differential
10	99-7582	2	Washer-Differential
10	99-7583	2	Washer-Differential
10	99-7584	2	Washer-Differential
11	99-7588	1	Pin-Spring
12	99-7562	2	Bearing-Ball
13	99-7585	2	Shim 0.1
13	99-7586	2	Shim 0.2
13	99-7587	2	Shim 0.4

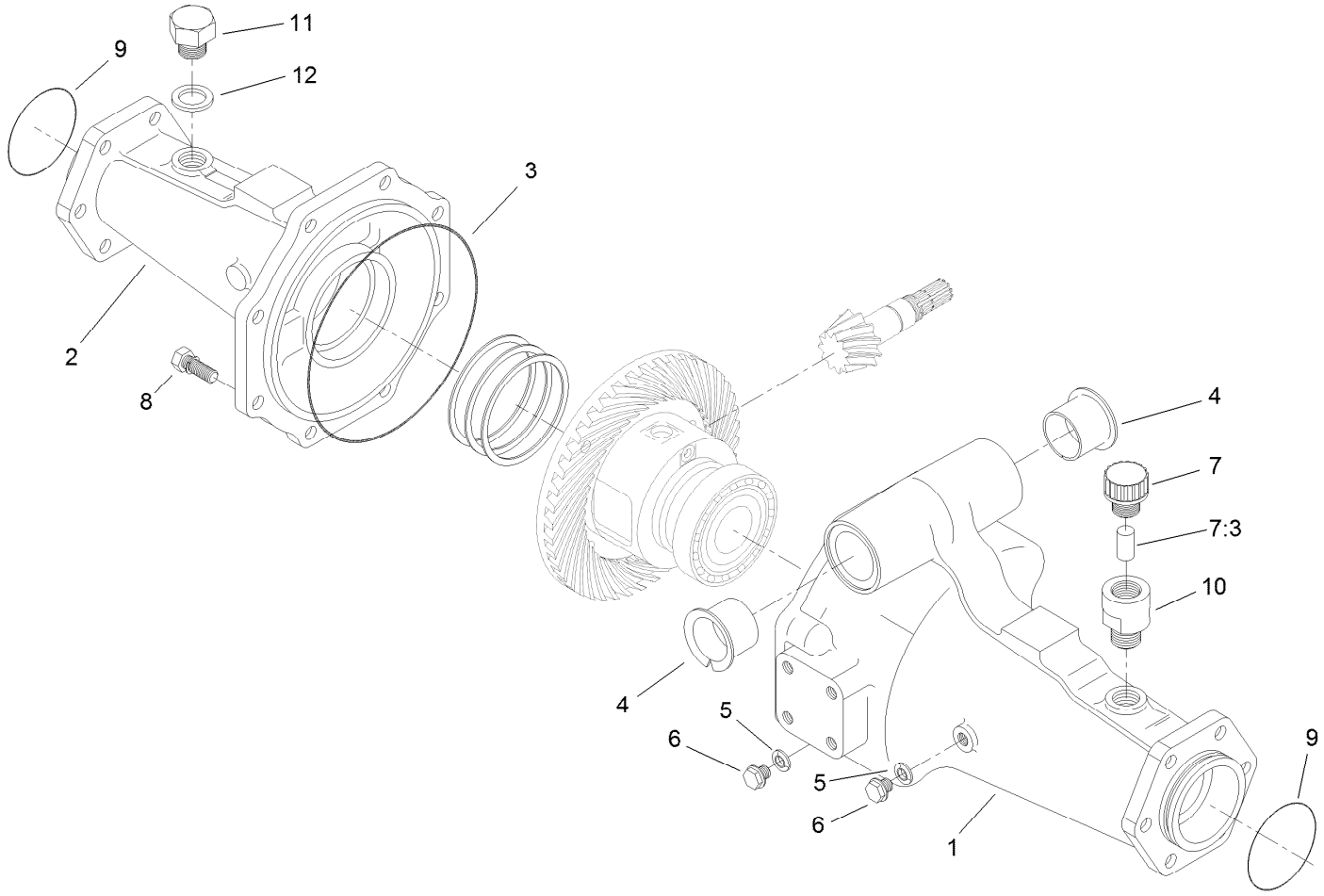

Axle Support Assembly
Rear Axle Assembly No. 110-4750

Ref.	*Part Number*	*Qty.*	*Description*
1	95-7508	1	Support-Axle
2	95-7506	1	Support-Axle
3	106-1067	1	O-Ring
4	95-7537	2	Bushing-Flanged
5	99-7590	2	Washer-Seal
6	99-7589	2	Plug
7	110-4812	1	Axle Vent ASM
7:3	110-4815	1	Insert-Filter, Foam
8	99-7592	8	Bolt
9	106-1068	2	O-Ring
10	104-2377	1	Extension-Vent
11	104-8643	1	Plug
12	104-8644	1	O-Ring

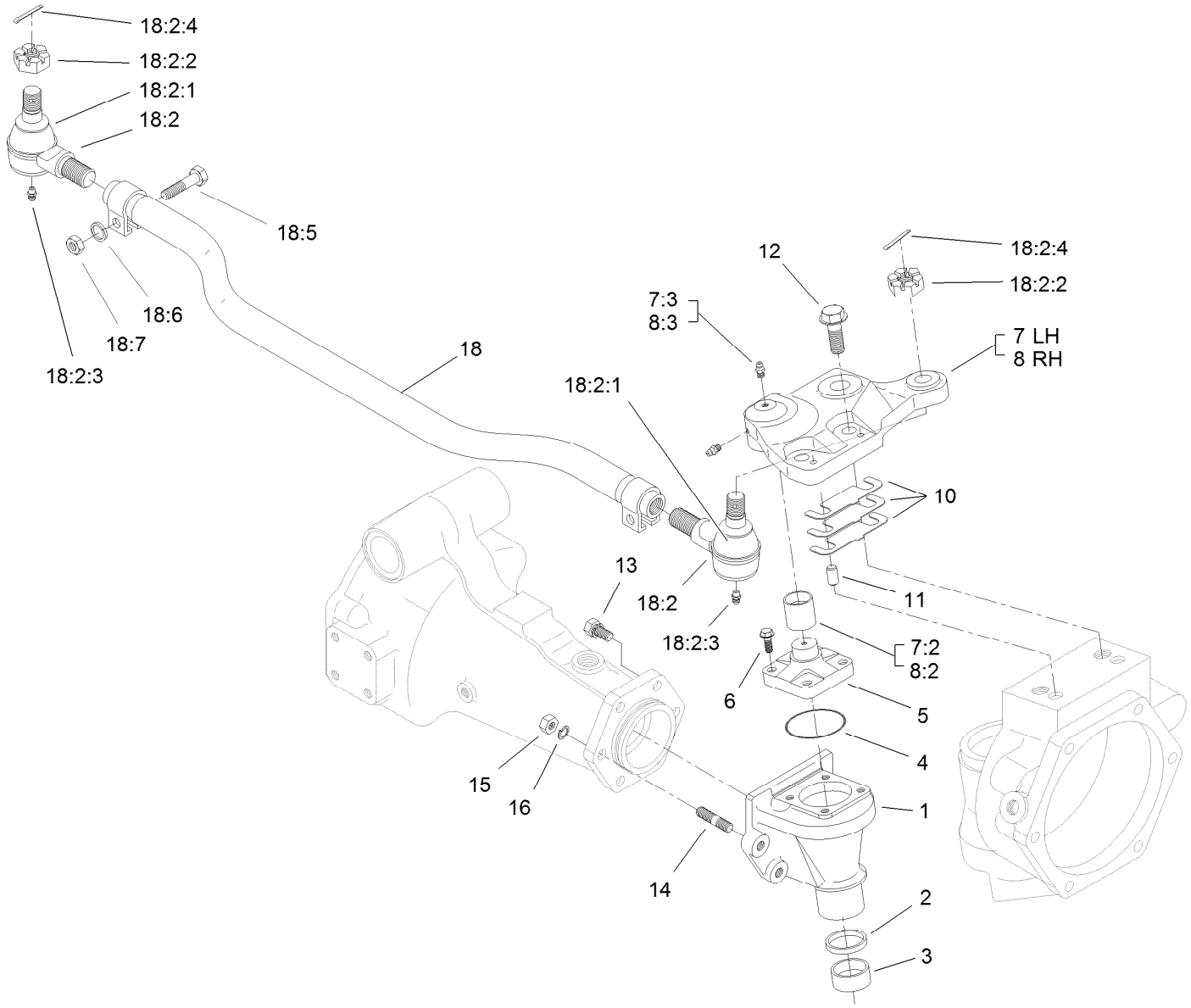

Bevel Gear Case Assembly
Rear Axle Assembly No. 110-4750

Ref.	Part Number	Qty.	Description
1	110-4752	2	Case-Gear, Bevel
2	110-4754	2	Seal-Oil
3	104-2378	2	Bushing
4	106-1069	2	O-Ring
5	104-2373	2	Knuckle
6	104-2374	8	Bolt
7	100-3768	1	LH Steering Arm ASM
7:2	104-8634	1	Bushing
7:3	106-1104	2	Fitting-Grease
8	100-3766	1	RH Steering Arm ASM
8:2	104-8634	1	Bushing
8:3	106-1104	2	Fitting-Grease
10	95-7547	2	Shim 0.1
10	95-7548	2	Shim 0.2
10	95-7549	2	Shim 0.3
11	99-7597	4	Pin-Dowel

Ref.	Part Number	Qty.	Description
12	104-2375	4	Bolt
13	99-7599	8	Bolt
14	99-7525	4	Stud
15	99-7526	4	Nut
16	99-7527	4	Washer-Spring
18	106-1141	1	Steering Tie Rod ASM
18:2	106-1113	2	Tie Rod End ASM - RH Thread
18:2:1	100-3853	1	Cover-Dust
18:2:2	100-3854	1	Nut-Castle
18:2:3	110-4755	1	Fitting-Grease
18:2:4	3272-11	1	Pin-Cotter
18:5	100-3855	2	Bolt
18:6	99-7527	2	Washer-Spring
18:7	99-7526	2	Nut

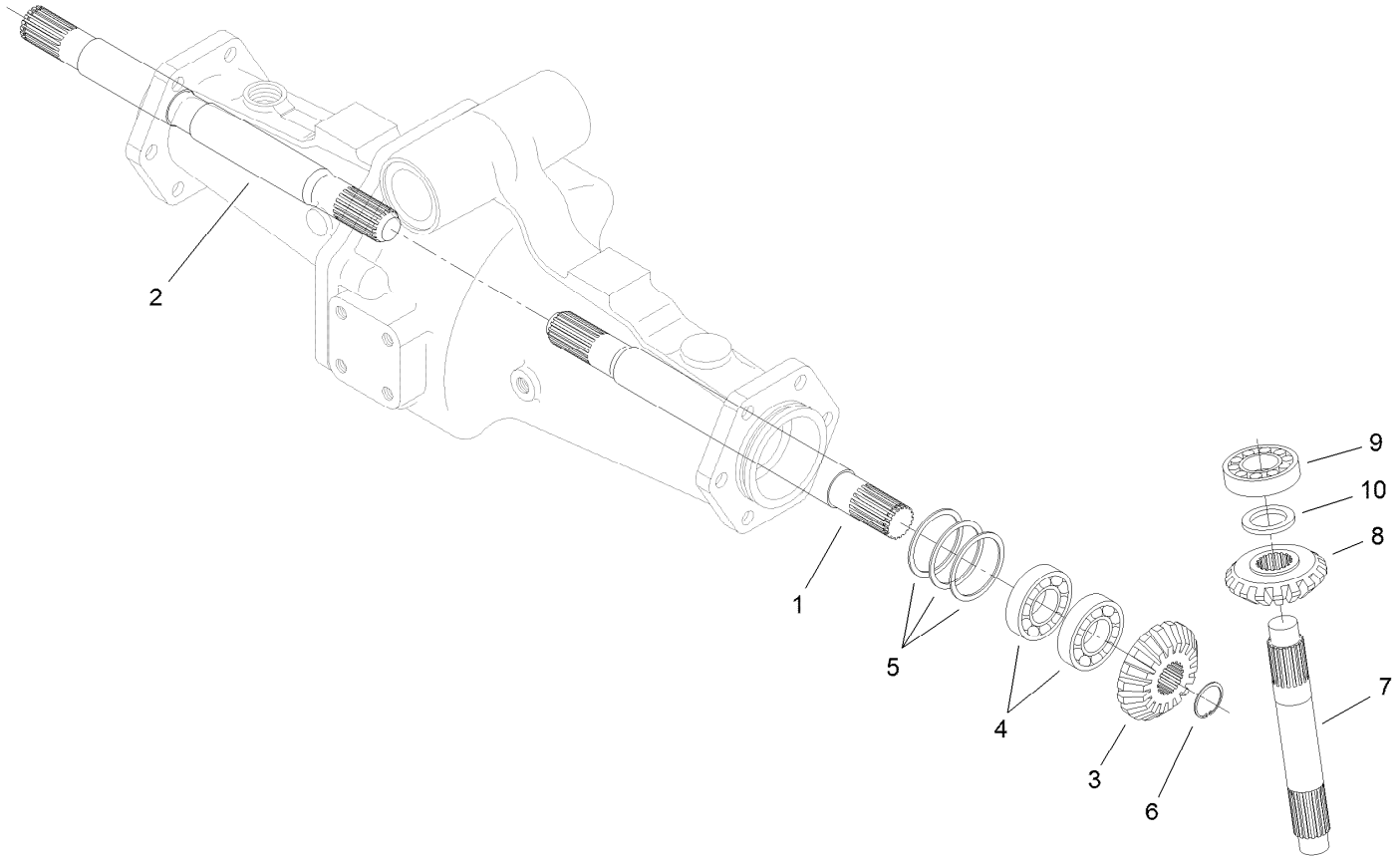

Bevel Gear Shaft Assembly
Rear Axle Assembly No. 110-4750

Ref.	*Part Number*	*Qty.*	*Description*
1	95-7509	1	Shaft-Gear, Differential
2	95-7512	1	Shaft-Gear, Differential
3	95-7517	2	Gear-Bevel, 15 Tooth
4	99-7530	4	Bearing-Ball
5	99-7552	2	Shim 0.1
5	99-7553	2	Shim 0.2
5	99-7554	2	Shim 0.5
6	99-7531	2	Clip
7	110-4753	2	Shaft-Gear, Bevel
8	95-7519	2	Gear-Bevel, 17 Tooth
9	99-7532	2	Bearing-Roller, Taper
10	99-7558	2	Collar

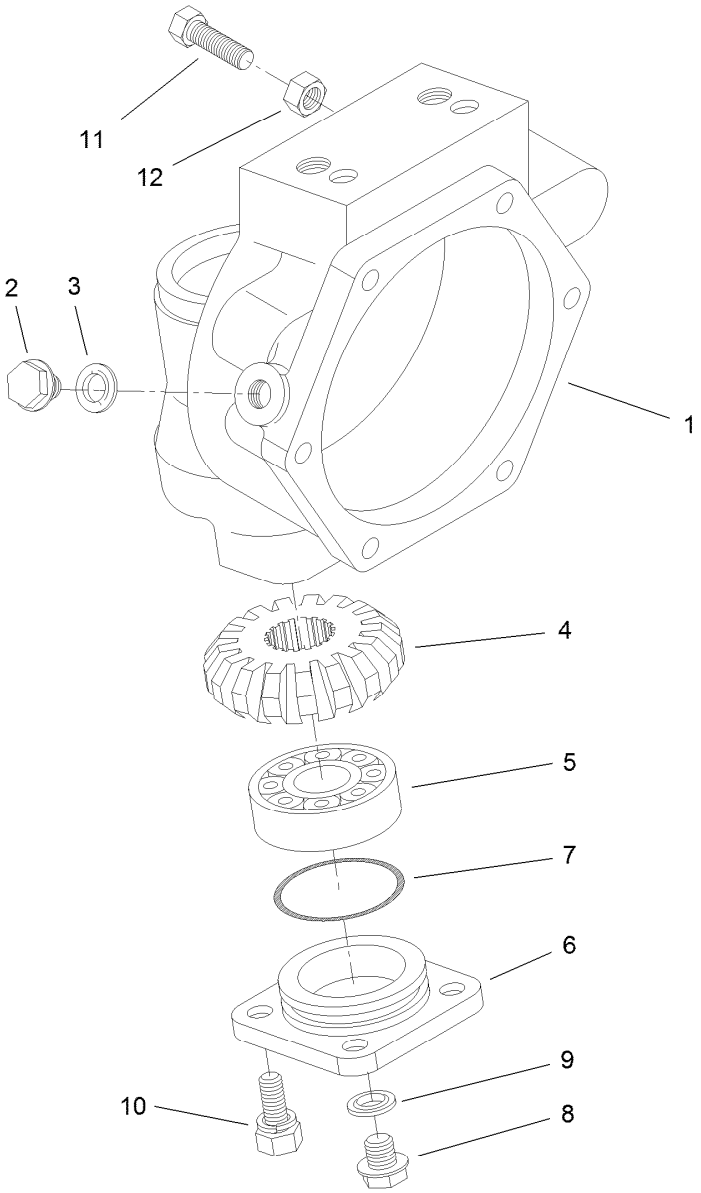

Axle Case Assembly
Rear Axle Assembly No. 110-4750

Ref.	*Part Number*	*Qty.*	*Description*
1	110-4751	2	Case-Axle
2	99-7535	2	Plug
3	99-7536	2	Washer-Seal
4	95-7527	2	Gear-Bevel, 17 Tooth
5	99-7532	2	Bearing-Roller, Taper
6	100-2560	2	Cover
7	106-1070	2	O-Ring
8	99-7589	2	Plug
9	99-7590	2	Washer-Seal
10	100-2562	8	Bolt
11	106-1102	2	Bolt-Stop
12	106-1103	2	Nut

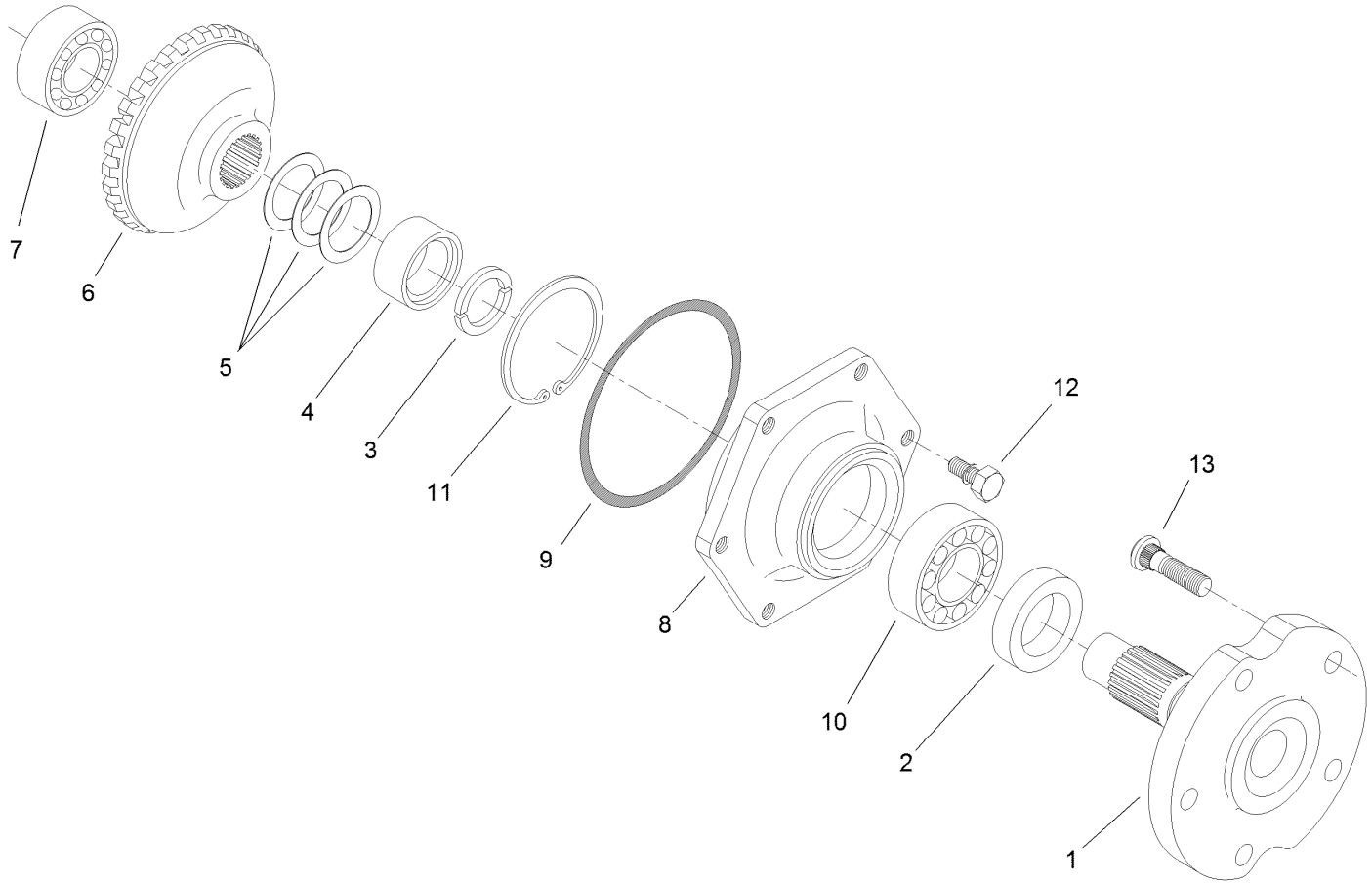

Axle Assembly
Rear Axle Assembly No. 110-4750

Ref.	*Part Number*	*Qty.*	*Description*
1	95-7522	2	Axle
2	99-7564	2	Seal-Oil
3	95-7544	4	Clip
4	95-7523	2	Spacer
5	99-7555	2	Shim 0.3
5	99-7556	2	Shim 0.2
5	99-7557	2	Shim 0.5
6	95-7524	2	Gear-Bevel, 29 Tooth
7	99-7534	2	Bearing-Ball
8	95-7521	2	Cover-Axle
9	106-1071	2	O-Ring
10	99-7561	2	Bearing-Ball
11	99-7539	2	Clip
12	99-7596	12	Bolt
13	99-7563	10	Stud

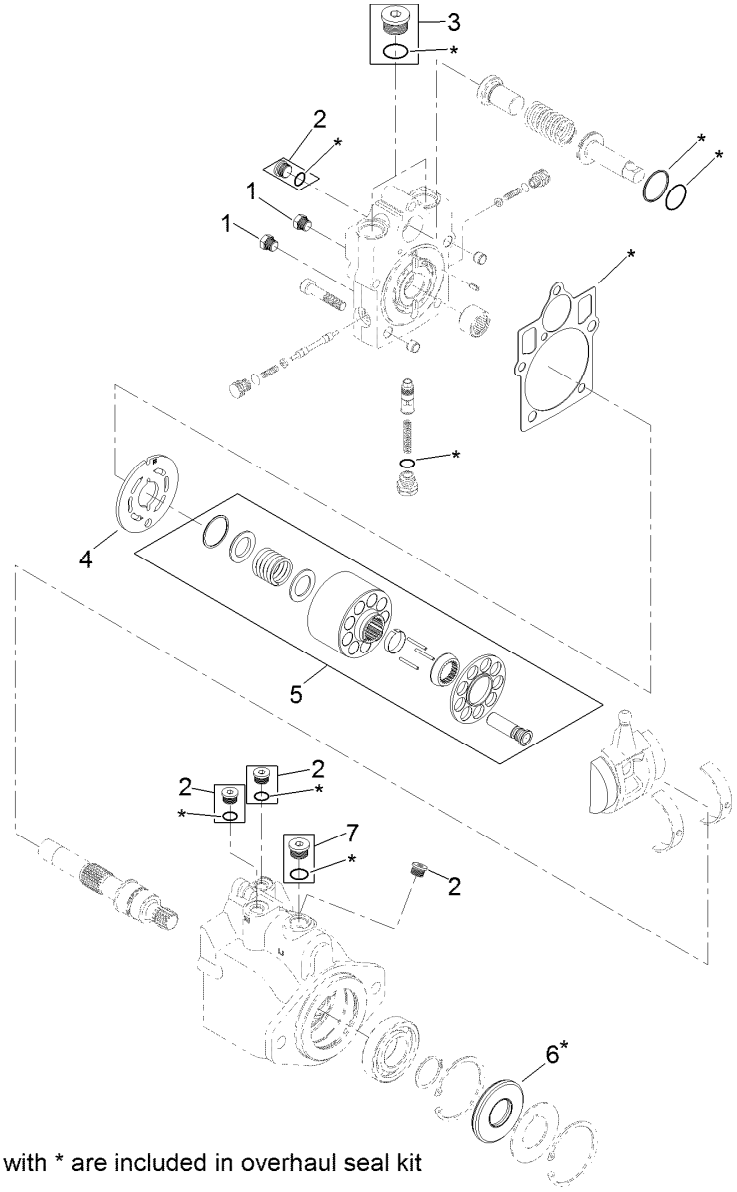

8= all items with * are included in overhaul seal kit

Piston Motor Assembly No. 121-3101

Ref.	*Part Number*	*Qty.*	*Description*
1	92-1352	2	Plug
2	69-3080	5	Plug
3	69-3130	2	Plug
4	125-4638	1	Valve Plate
5	125-4639	1	Cylinder Block Kit
6	69-3190	1	Seal-Lip
7	67-9090	1	Plug ASM
8	121-1736	1	Overhaul Seal Kit

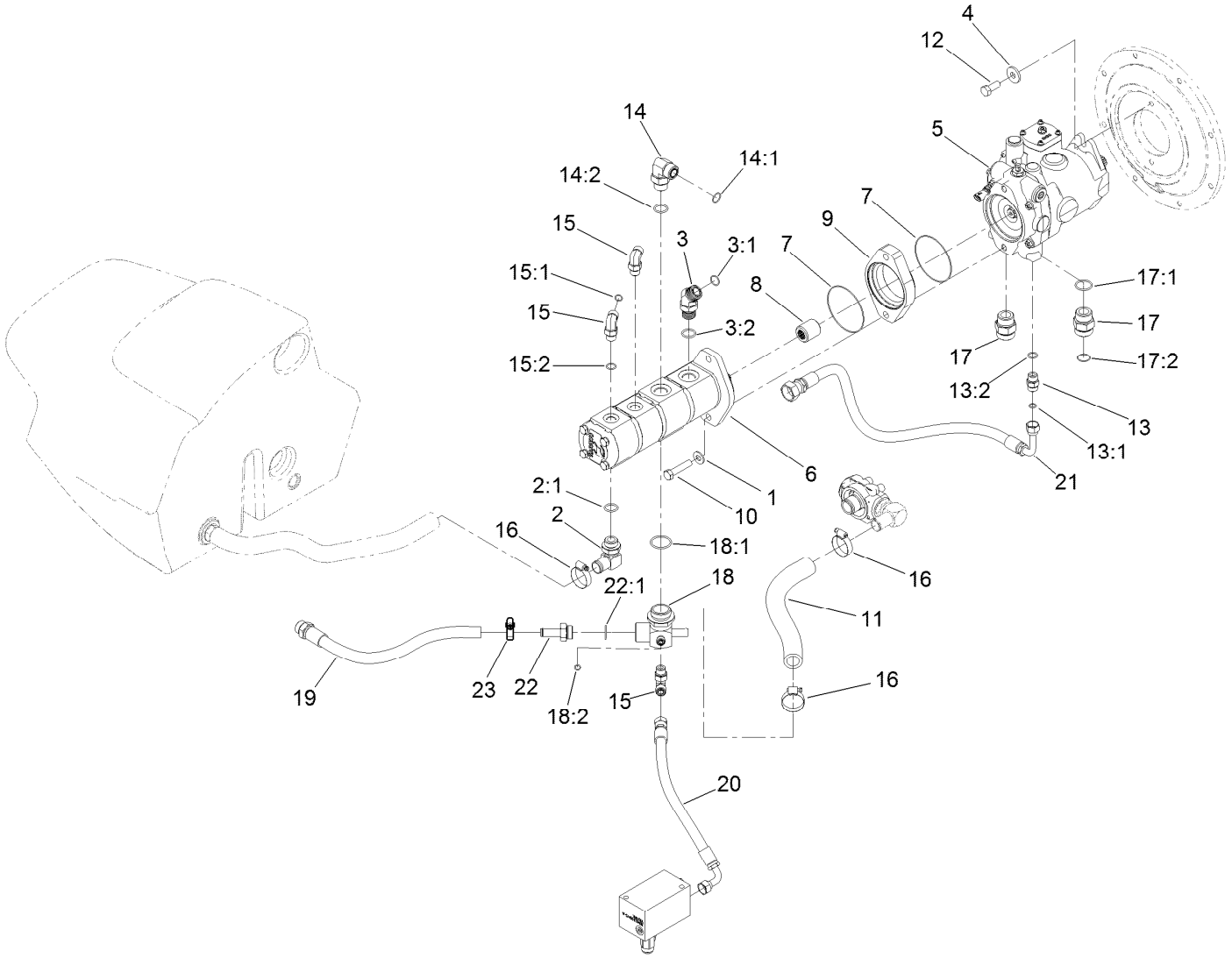

Hydraulic Pump Assembly

Ref.	Part Number	Qty.	Description
1	87-7270	2	Washer-Thrust
2	100-4202	1	Fitting-HYD, 90 DEG
2:1	237-81	1	O-Ring
3	100-5530	1	Fitting-HYD, 45 DEG
3:1	237-58	1	O-Ring
3:2	237-81	1	O-Ring
4	110-6147	2	Washer-Flat
5	114-4188	1	Piston Pump ASM
6	114-4189	1	4-Section Pump ASM
7	115-3009	2	O-Ring
8	115-3011	1	Coupler-Pump
9	115-3757	1	Spacer-Pump
10	115-8488	2	Screw-HH
11	121-3062	1	Hose-Suction
12	325-5	2	Screw-HH
13	340-4	1	Fitting-HYD, Straight
13:1	237-30	1	O-Ring
13:2	237-79	1	O-Ring
14	340-142	1	Fitting-HYD, 90 DEG

Ref.	Part Number	Qty.	Description
14:1	237-58	1	O-Ring
14:2	237-81	1	O-Ring
15	340-98	3	Fitting-HYD, 90 DEG
15:1	237-79	1	O-Ring
15:2	237-30	1	O-Ring
16	2412-111	3	Clamp
17	104-3797	2	Fitting-HYD, Straight
17:1	237-146	1	O-Ring
17:2	340-65	1	O-Ring
18	130-1616	1	Fitting-Tee
18:1	237-101	1	O-Ring
18:2	237-22	1	O-Ring
19	121-3079	1	Hose ASM
20	125-4616	1	Hose ASM
21	130-1633	1	Hose ASM
22	121-1526	1	Fitting-Straight
22:1	237-81	1	O-Ring
23	2412-129	1	Clamp-Hose

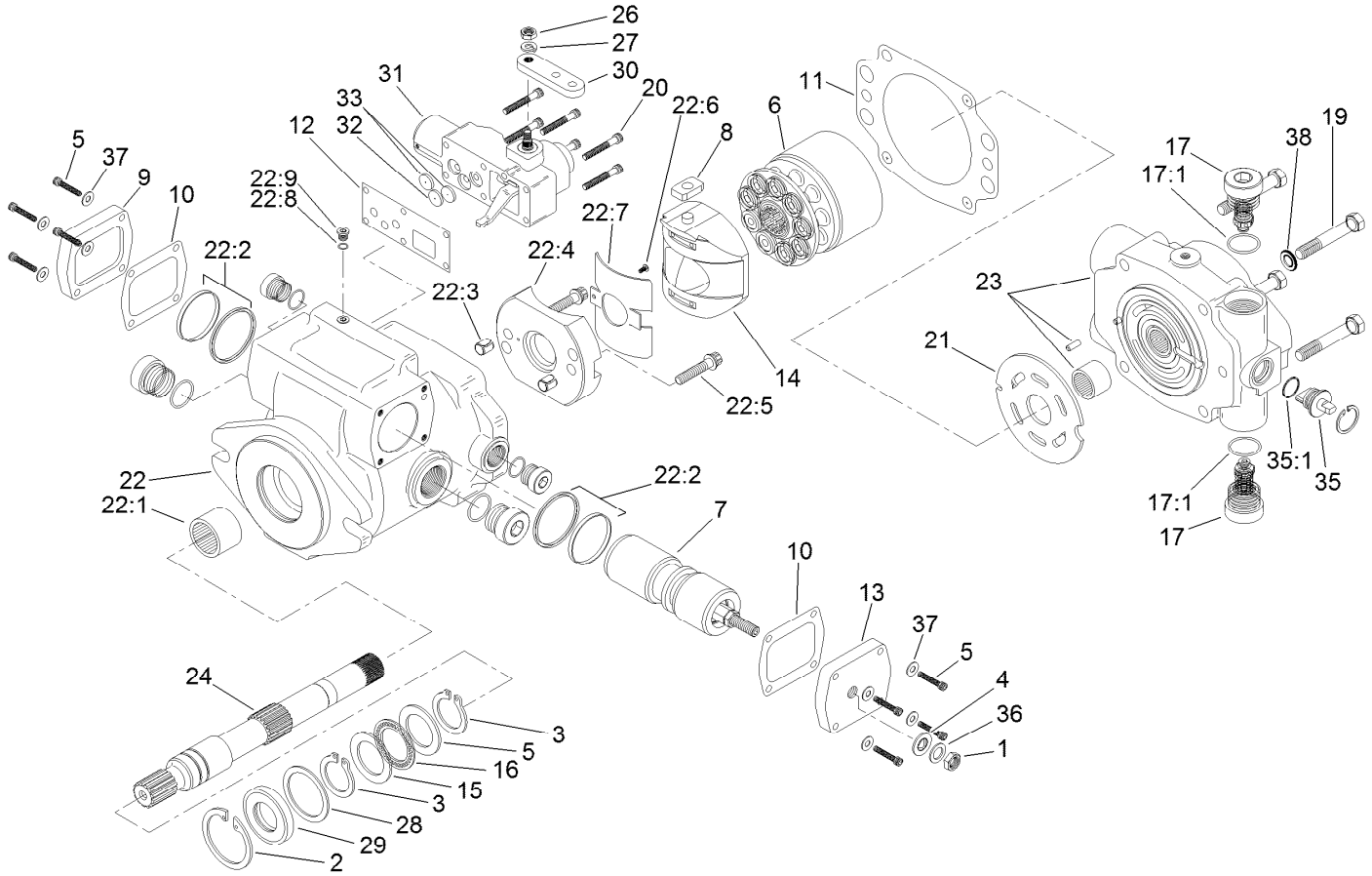

Piston Pump Assembly No. 114-4188

Ref.	Part Number	Qty.	Description
1	3220-3	1	Nut-HJ
2	60-6260	1	Ring
3	76-7000	2	Ring-Retaining
4	94-3027	1	Washer-Seal
5	93-6337	8	Screw
6	105-9851	1	Rotating Kit
7	105-4572	1	Servo Piston ASM
8	94-3032	1	Follower-Piston
9	94-3033	1	Plate-Cover
10	93-6339	2	Gasket
11	105-2900	1	Gasket-Housing
12	105-2901	1	Gasket-Housing, Control
13	105-9853	1	Plate-Cover
14	94-3026	1	Camplate ASM
15	76-6950	2	Race-Thrust
16	76-6960	1	Bearing-Thrust
17	105-2857	2	Valve-Relief
17:1		1	O-Ring ●

Ref.	Part Number	Qty.	Description
19	323-45	4	Screw-HH
20	93-6324	6	Screw
21	105-9854	1	Plate-Valve
22	105-9855	1	Housing ASM
22:1		1	Bearing ●
22:2		2	Seal ASM ●
22:3		2	Dowel-Bushing ●
22:4		1	Cradle ASM ●
22:5		2	Screw ●
22:6		1	Screw ●
22:7		1	Bushing ●
22:8		1	O-Ring ●
22:9		1	Plug ●
23	115-4445	1	Endcover Sub ASM
24	115-3008	1	Shaft-Drive
26	93-6327	1	Nut
27	3253-3	1	Washer-Lock
28	60-6240	1	Washer

● Not serviced separately

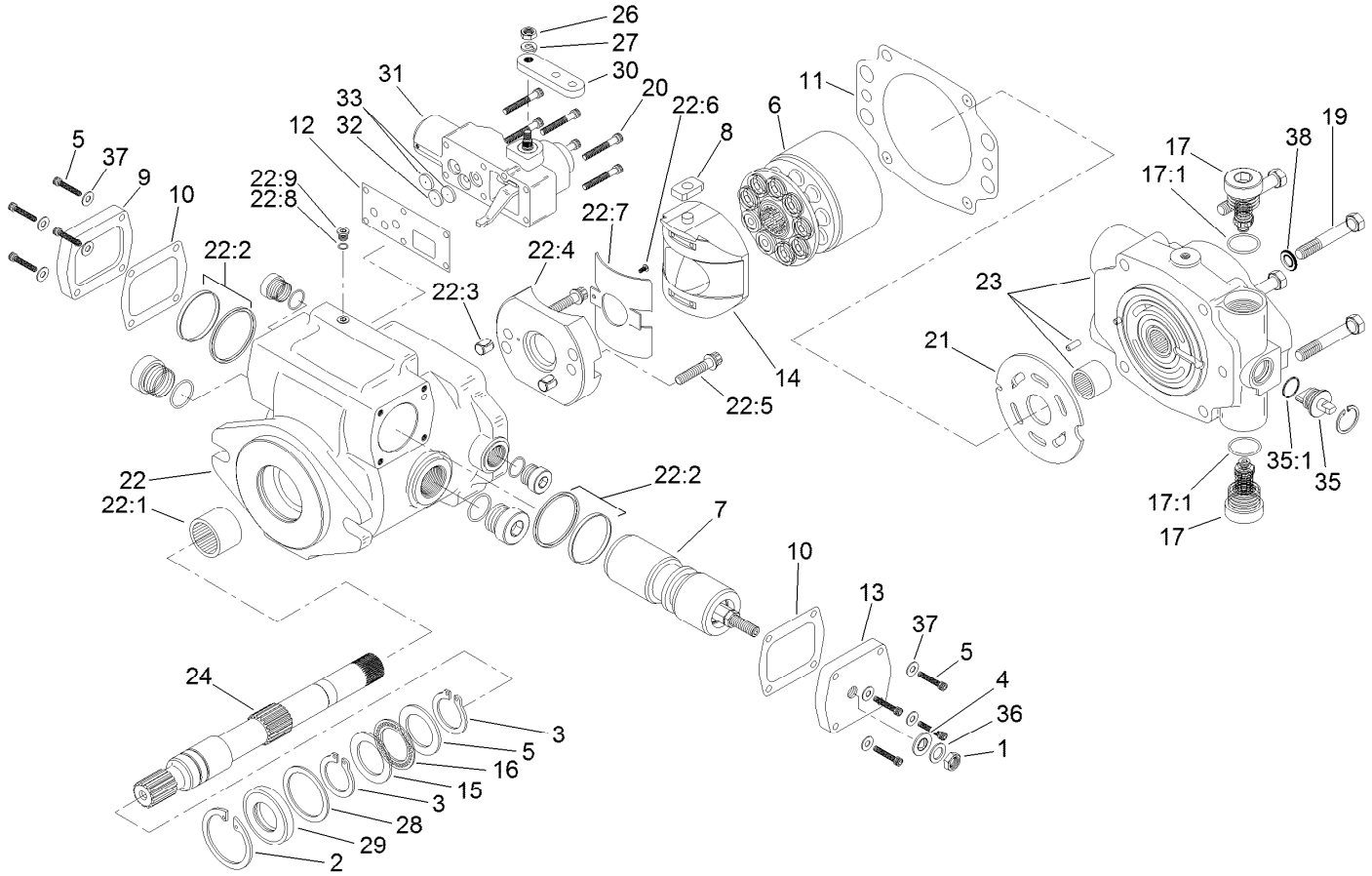

Piston Pump Assembly No. 114-4188 (continued)

Ref.	Part Number	Qty.	Description
29	105-3331	1	Seal-Shaft
30	110-0036	1	Arm-Control
31	115-4446	1	Manual Servo Control ASM
32	105-2909	1	Orifice-Control, .036 Dia
33	94-3041	2	Orifice-Control (.028 Dia)

Ref.	Part Number	Qty.	Description
35	105-2864	1	Valve-Bypass
35:1		1	O-Ring ●
36	94-3030	1	Washer
37	93-6336	8	Washer
38	105-9762	4	Washer

● Not serviced separately

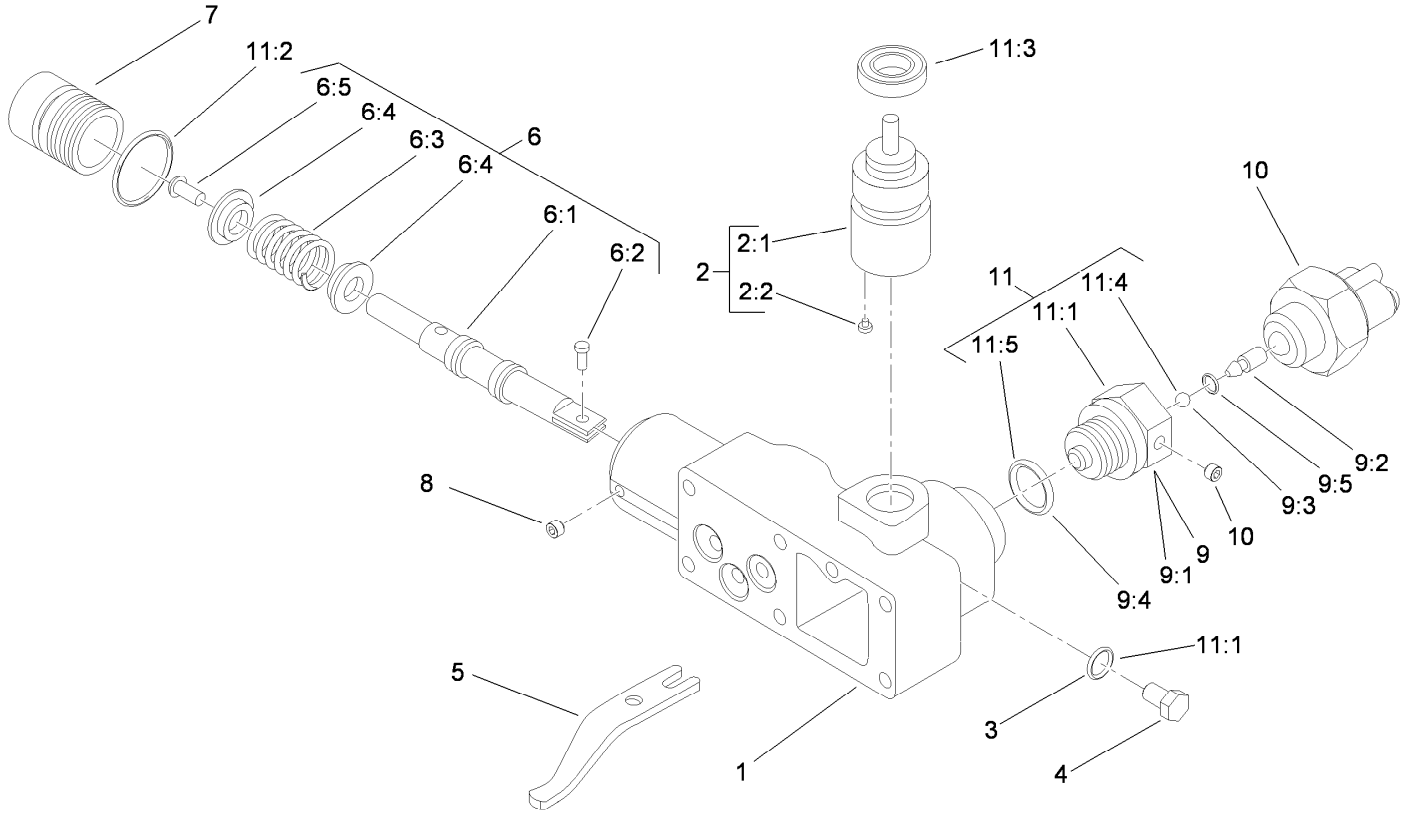

Control Assembly No. 115-4446

Ref.	Part Number	Qty.	Description
1		1	Housing-Control ●
2	108-7099	1	Input Control Shaft ASM
2:1		1	Shaft ●
2:2		1	Pin ●
3		1	O-Ring ●
4		1	Plug ●
5		1	Link-Feedback ●
6	108-7098	1	Valve Spool ASM
6:1		1	Valve-Spool ●
6:2		1	Pin-Dowel ●
6:3		1	Spring ●
6:4		2	Retainer ●
6:5		1	Screw ●
7		1	Plug ●

Ref.	Part Number	Qty.	Description
8		2	Screw-Set ●
9	108-8003	1	Adaptor ASM
9:1		1	Adaptor-Lockout, Neutral ●
9:2		1	Pin ●
9:3		1	Ball ●
9:4		1	O-Ring ●
9:5		1	O-Ring ●
10	115-3795	1	Switch-Neutral
11	94-3044	1	Seal Kit
11:1	117-8979	1	Seal-Shaft
11:2	105-2901	1	Gasket-Housing, Control
11:3		1	O-Ring ●
11:4		1	O-Ring ●
11:5		1	Seal-Wiper ●

● Not serviced separately

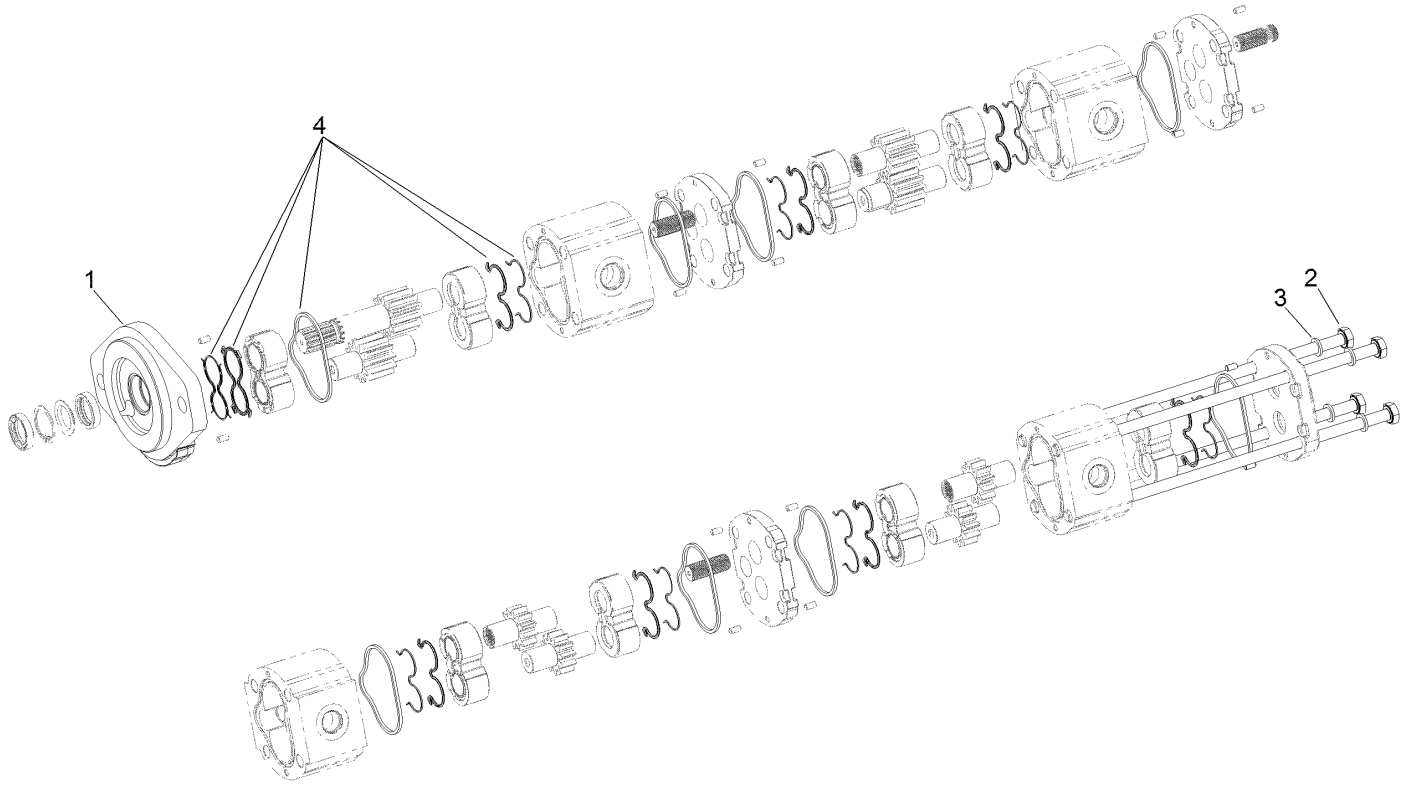

Four Section Pump Assembly No. 114-4189

Ref.	*Part Number*	*Qty.*	*Description*
1	115-3774	1	Cover-Front
2	115-4444	4	Bolt
3	115-9138	4	Washer
4	115-3776	1	Seal Kit

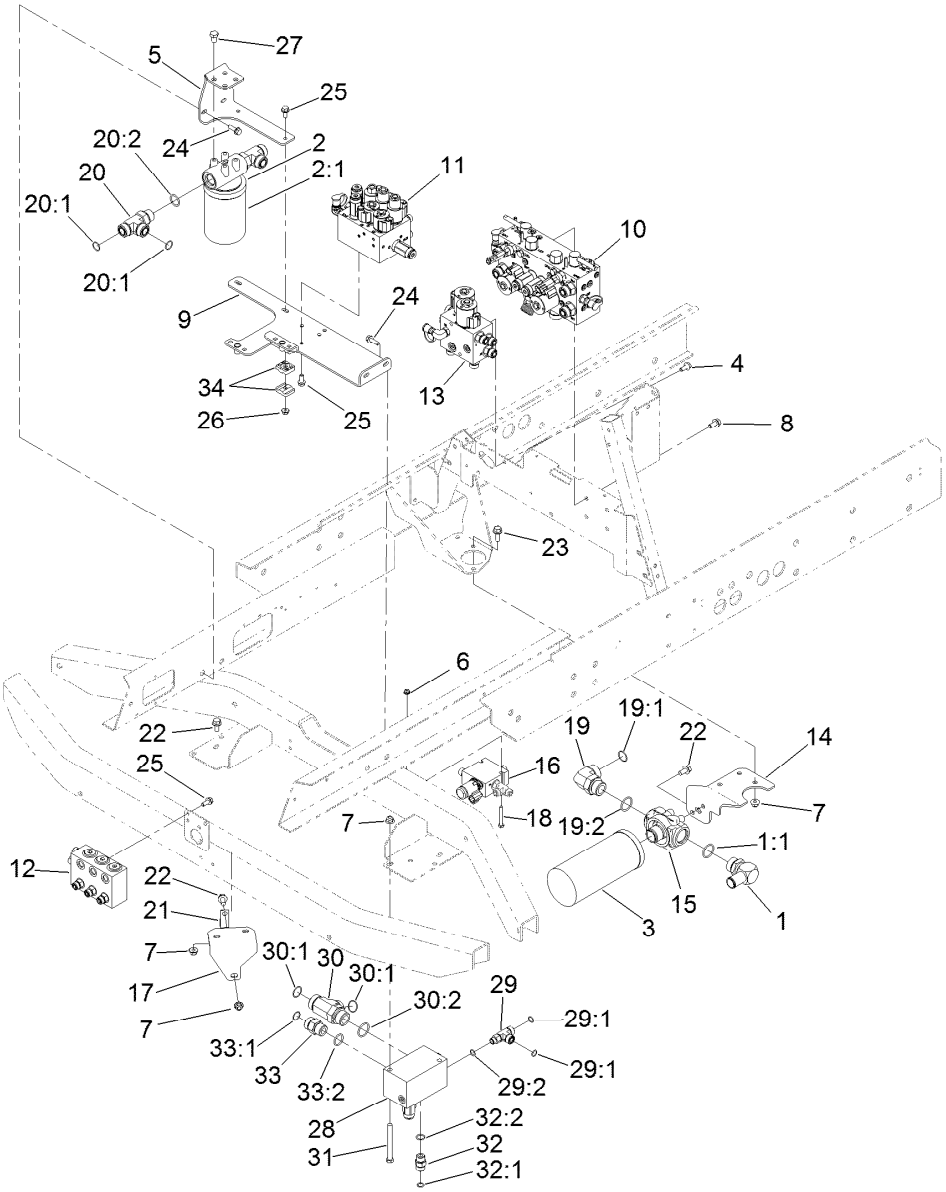

Hydraulic System Componets Assembly

Ref.	Part Number	Qty.	Description
1	23-8910	1	Stem-Barb, 90 DEG
1:1	237-146	1	O-Ring
2	93-2242	1	Filter-Oil
2:1	75-1310	1	Filter-HYD
3	94-2621	1	Element-Filter
4	100-1668	2	Screw-Flange
5	104-5492-03	1	Bracket-Mount, Filter
6	104-7201	2	Nut-HF
7	104-8301	7	Nut-Flange, NI
8	110-1718	4	Screw-HHF
9	117-2362	1	Bracket-Mount, Valve
10	130-1656	1	Mow Manifold ASM
11	130-1669	1	Lift Manifold ASM
12	130-1670	1	Junction Manifold ASM
13	119-3943	1	Fan Drive Manifold ASM
14	120-8022-03	1	Plate-Mount, Filter
15	121-1577	1	Head-Filter
16	121-3077	1	3 Way Valve Manifold ASM
17	121-3089-03	1	Plate-Mount,Tube
18	321-11	2	Screw-HH
19	340-129	1	Fitting-HYD, 90

Ref.	Part Number	Qty.	Description
19:1	237-146	1	O-Ring
19:2	340-65	1	O-Ring
20	340-148	2	Fitting-Tee
20:1	237-81	1	O-Ring
20:2	237-58	2	O-Ring
21	2412-150	1	Clip-J
22	3234-1	5	Screw-HHF
23	3234-11	2	Screw-HHF
24	115-1794	1	Screw-HHF
25	3234-5	9	Screw-HHF
26	104-8300	2	Nut-Flange, NI
27	33115-016	4	Screw-HH
28	121-3078	1	Rear Traction Manifold ASM
29	110-0064	1	Fitting-Tee
29:1	237-30	2	O-Ring
29:2	237-42	1	O-Ring
30	104-3795	1	Fitting-HYD, Tee
30:1	340-65	2	O-Ring
30:2	237-146	1	O-Ring
31	323-42	2	Screw-HH
32	340-4	1	Fitting-HYD, Straight

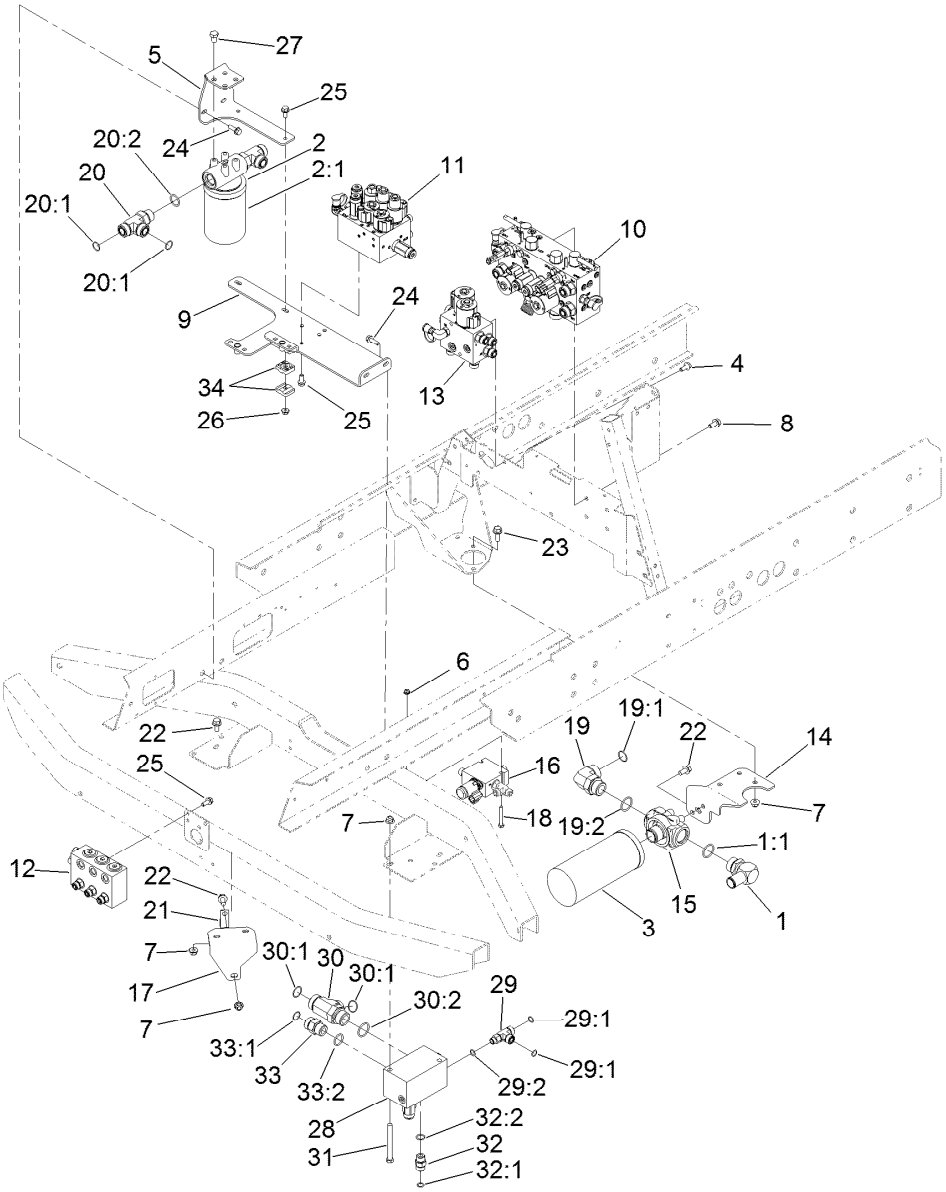

Hydraulic System Componets Assembly (continued)

Ref.	Part Number	Qty.	Description
32:1	237-30	1	O-Ring
32:2	237-79	1	O-Ring
33	340-9	1	Fitting-HYD, Straight
33:1	237-58	1	O-Ring
33:2	237-81	1	O-Ring
34	56-7973	2	Clamp-Tube

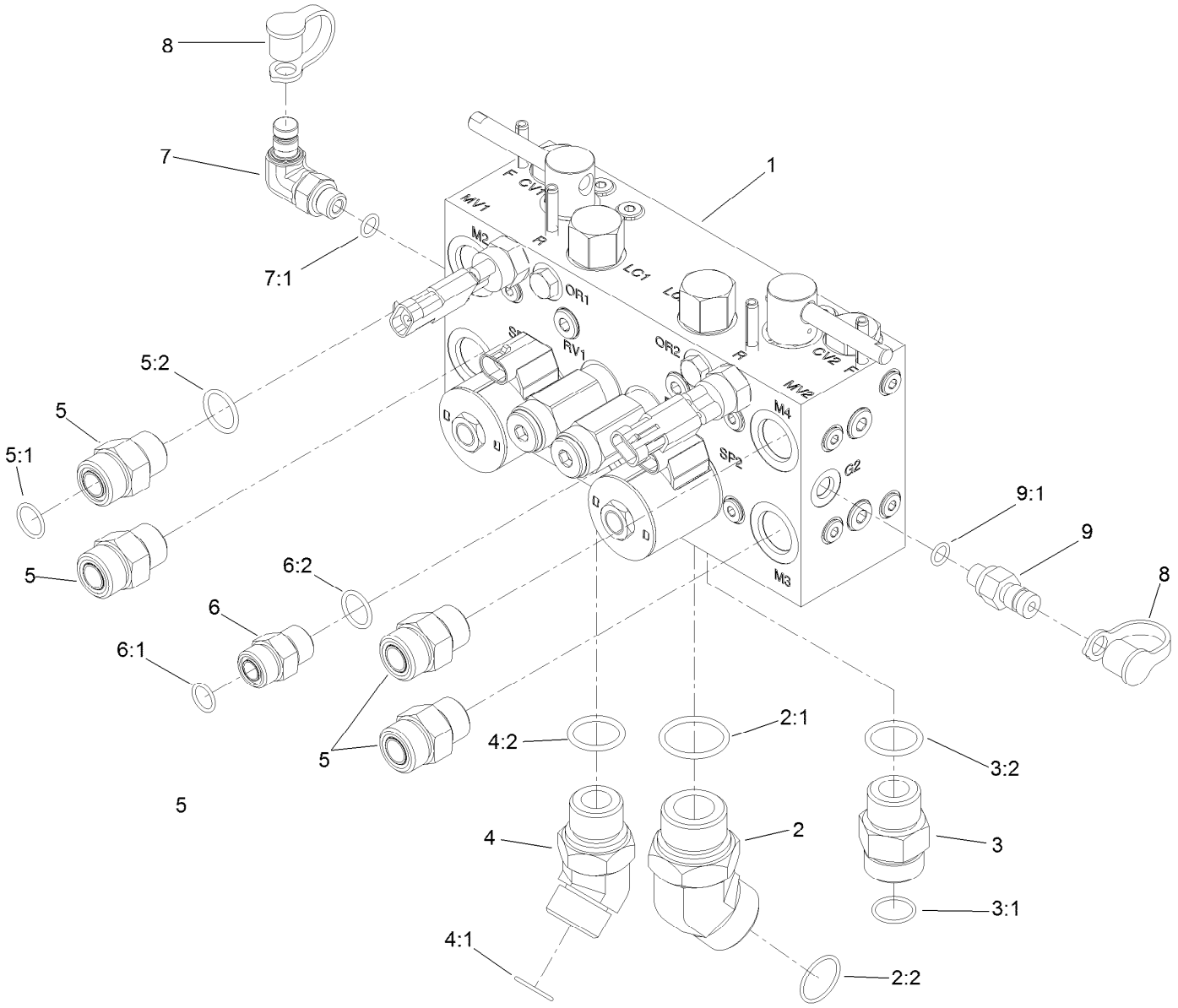

Mow Manifold Assembly No. 130-1656

Ref.	Part Number	Qty.	Description
1		1	Manifold-Mow 5-Plex ●
2	104-3509	1	Fitting-HYD, 45 DEG
2:1	237-146	1	O-Ring
2:2	340-65	1	O-Ring
3	340-9	1	Fitting-HYD, Straight
3:1	237-58	1	O-Ring
3:2	237-81	1	O-Ring
4	100-5530	1	Fitting-HYD, 45 DEG
4:1	237-58	1	O-Ring
4:2	237-81	1	O-Ring
5	340-7	4	Adapter

Ref.	Part Number	Qty.	Description
5:1	237-65	1	O-Ring
5:2	237-80	1	O-Ring
6	340-4	1	Fitting-HYD, Straight
6:1	237-30	1	O-Ring
6:2	237-79	1	O-Ring
7	115-9147	1	Fitting-Elbow, 90 DEG
7:1	237-78	1	O-Ring
8	354-79	2	Cap-Dust
9	354-77	1	Fitting-Quick
9:1	237-78	1	O-Ring

● Not serviced separately

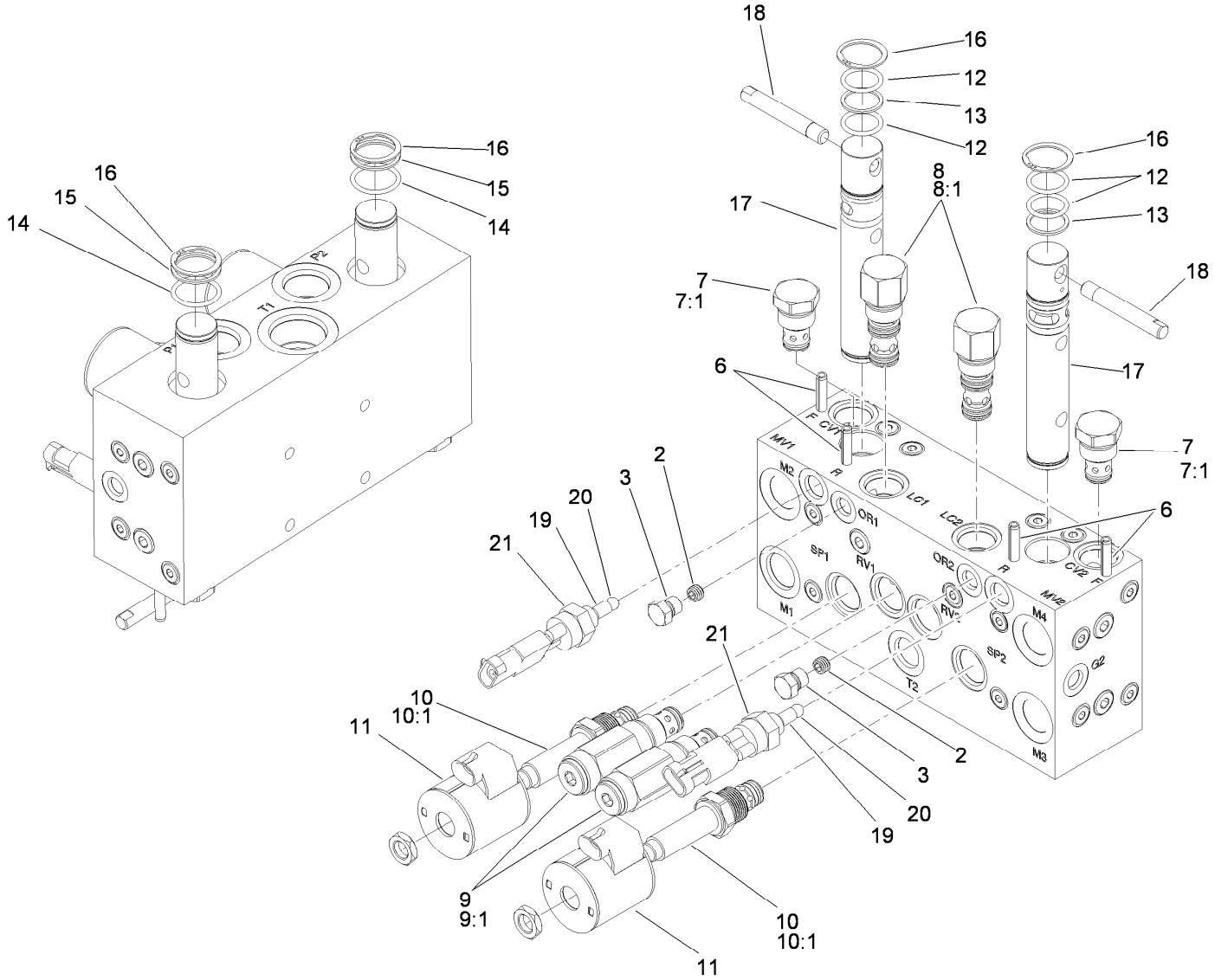

Manifold Mow Block Assembly

Ref.	Part Number	Qty.	Description
2	110-8883	2	Plug-Orifice (0.040)
3		2	Plug ■
6	112-6531	4	Pin-Spring
7	110-8881	2	Valve-Check
7:1	105-9159	1	Seal Kit ●
8	120-1693	2	Compensator-Pressure
8:1	119-2159	1	Seal Kit
9	120-1659	2	Valve-Relief, 3000 Psi
9:1	105-9159	1	Seal Kit ●
10	120-1694	2	Valve-Proportional, Nc
10:1	105-9159	1	Seal Kit

Ref.	Part Number	Qty.	Description
11	110-6344	2	Coil-12V, Dc
12	120-1657	4	O-Ring
13	120-1656	2	Ring-Backup
14	125-1652	2	O-Ring
15	120-1654	2	Ring-Backup
16	120-1653	4	Ring-Retaining, External
17	120-1652	2	Spool-Backlap
18	120-1651	2	Handle-Spool
19	120-1650	2	Pin
20	117-4605	2	Ball-Ss
21	72-4320	2	Switch-Ball

● Not illustrated

■ Not serviced separately

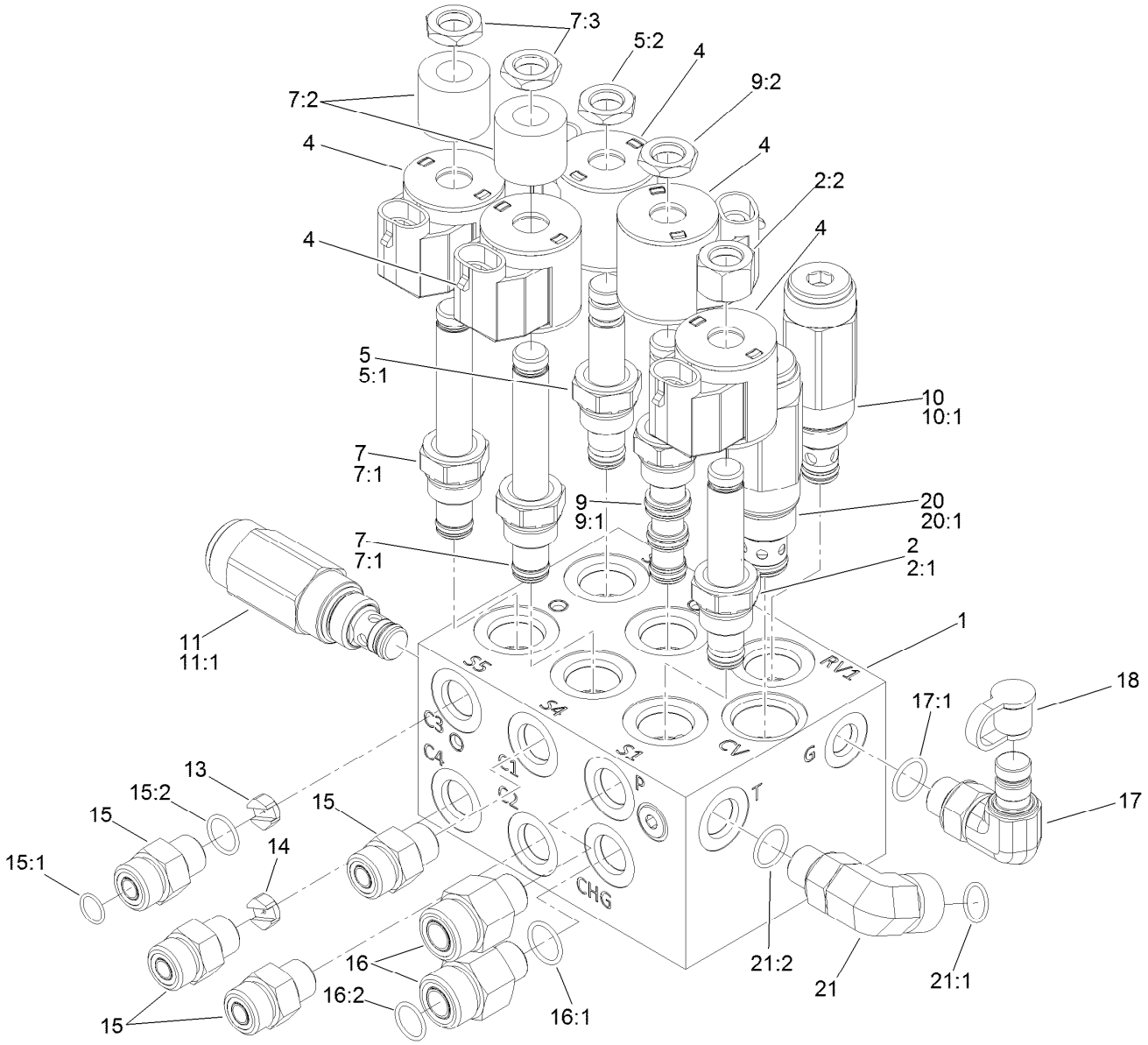

Lift Manifold Assembly No. 130-1669

Ref.	Part Number	Qty.	Description
1		1	Manifold Block ●
2	107-7517	1	Valve-Solenoid
2:1	105-9156	1	Seal Kit
2:2	107-7812	1	Nut-Solenoid
4	110-0497	5	Coil-Solenoid
5	112-9206	1	Solenoid Valve ASM
5:1	105-9156	1	Seal Kit
5:2	110-2634	1	Nut-Coil
7	110-8898	2	Valve-Solenoid
7:1	107-7527	1	Seal Kit
7:2	110-2634	1	Nut-Coil
7:3	110-8909	1	Spacer-Coil
9	120-1665	1	Valve-Solenoid
9:1	112-6520	1	Seal Kit
9:2	110-2634	1	Nut-Coil
10	120-1664	1	Valve-Relief, 1700 Psi
10:1	105-9156	1	Seal Kit
11	120-1663	1	Valve-Relief, 500 Psi

Ref.	Part Number	Qty.	Description
11:1	105-9156	1	Seal Kit
13	120-1662	1	Orifice-Flow Control, .040
14	119-2010	3	Orifice-Flow Control (0.055)
15	340-2	4	Fitting-HYD, Straight
15:1	237-22	1	O-Ring
15:2	237-42	1	O-Ring
16	340-5	2	Fitting-Straight
16:1	237-42	1	O-Ring
16:2	237-30	1	O-Ring
17	115-9147	1	Fitting-Elbow, 90 DEG
17:1	237-78	1	O-Ring
18	354-79	1	Cap-Dust
20	115-4140	1	Valve-Check
20:1	105-9159	1	Seal Kit
21	340-99	1	Fitting-HYD, 90 DEG
21:1	237-30	1	O-Ring
21:2	237-42	1	O-Ring

● Not serviced separately

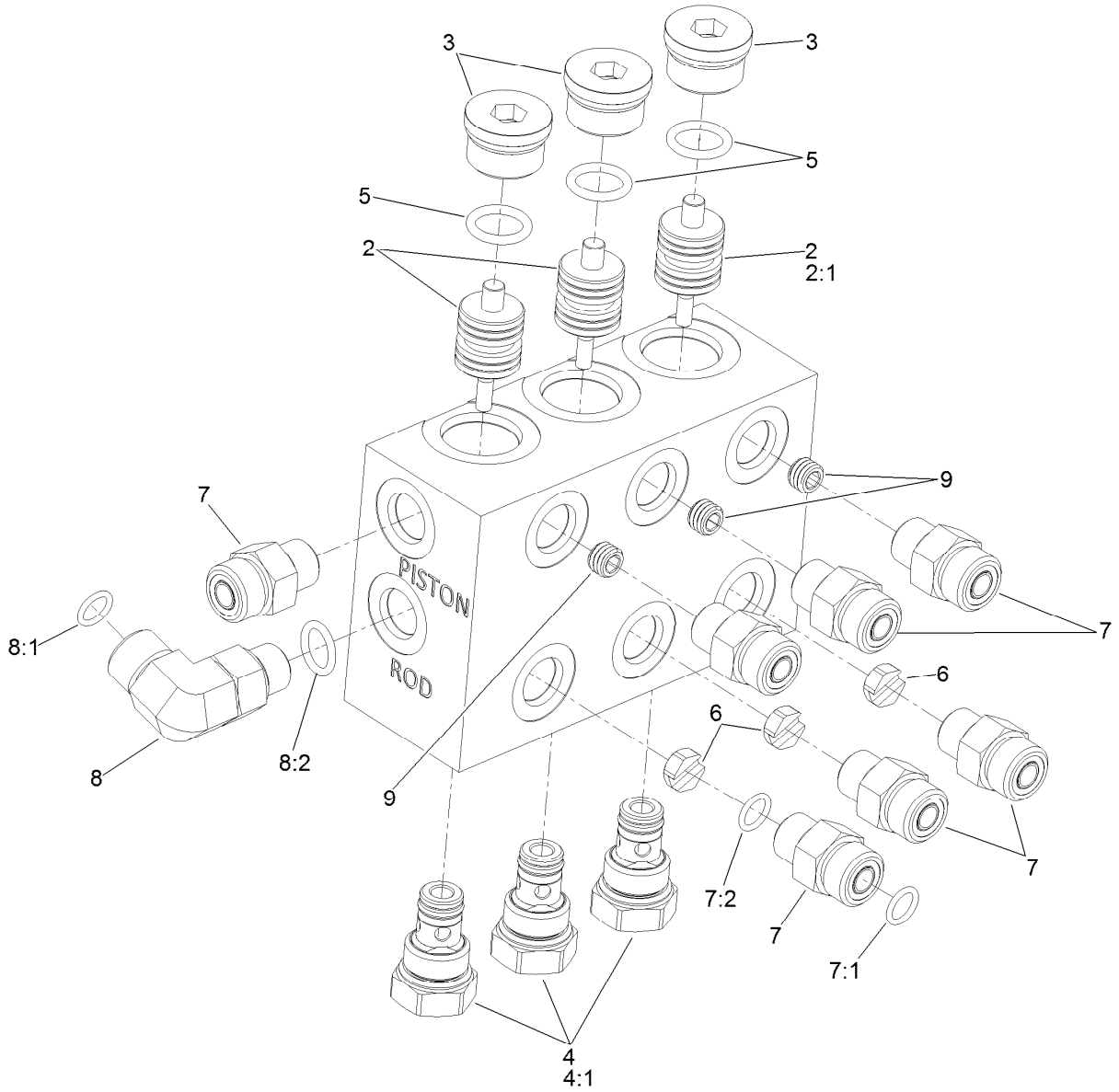

Juction Manifold Assembly No. 130-1670

Ref.	*Part Number*	*Qty.*	*Description*
2	110-8901	3	Piston-Pilot
2:1	110-8900	1	O-Ring
3		3	Plug ●
4	110-9006	3	Valve-Check
4:1	105-9156	1	Seal Kit
5	110-8900	3	O-Ring
6	119-2009	3	Orifice-Flow Control (0.030)
7	340-2	7	Fitting-HYD, Straight
7:1	237-22	1	O-Ring
7:2	237-42	1	O-Ring
8	340-77	1	Fitting-HYD, 90 DEG
8:1	237-22	1	O-Ring
8:2	237-42	1	O-Ring
9	130-1674	1	Orifice-Flow Control

● Not serviced separately

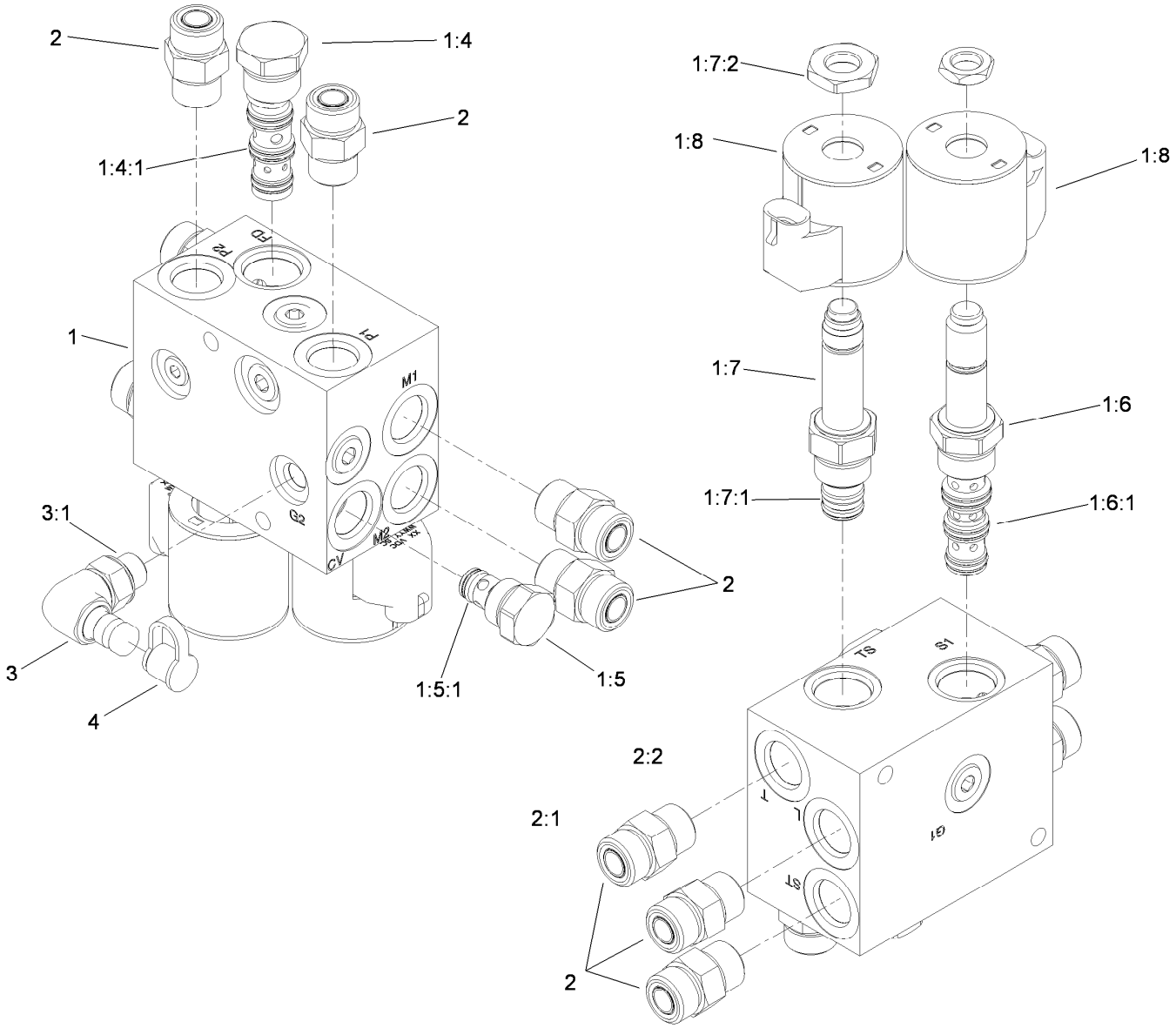

Fan Drive Manifold Assembly No. 119-3943

Ref.	Part Number	Qty.	Description
1		1	Fan Drive Manifold ASM ●
1:4	115-3024	1	Flow Divider
1:4:1	115-3025	1	Seal Kit
1:5	105-9321	1	Check Valve ASM
1:5:1	105-9156	1	Seal Kit
1:6	115-3023	1	Solenoid Valve ASM
1:6:1	110-8908	1	Spool Valve Seal Kit
1:7	115-3022	1	Relief-Proportional
1:7:1	110-6316	1	Seal Kit

Ref.	Part Number	Qty.	Description
1:7:2	119-7715	1	Nut-Coil
1:8	110-6344	2	Coil-12V, Dc
2	340-4	7	Fitting-HYD, Straight
2:1	237-30	1	O-Ring
2:2	237-79	1	O-Ring
3	115-9147	1	Fitting-Elbow, 90 DEG
3:1	237-78	1	O-Ring
4	354-79	1	Cap-Dust

● Not serviced separately

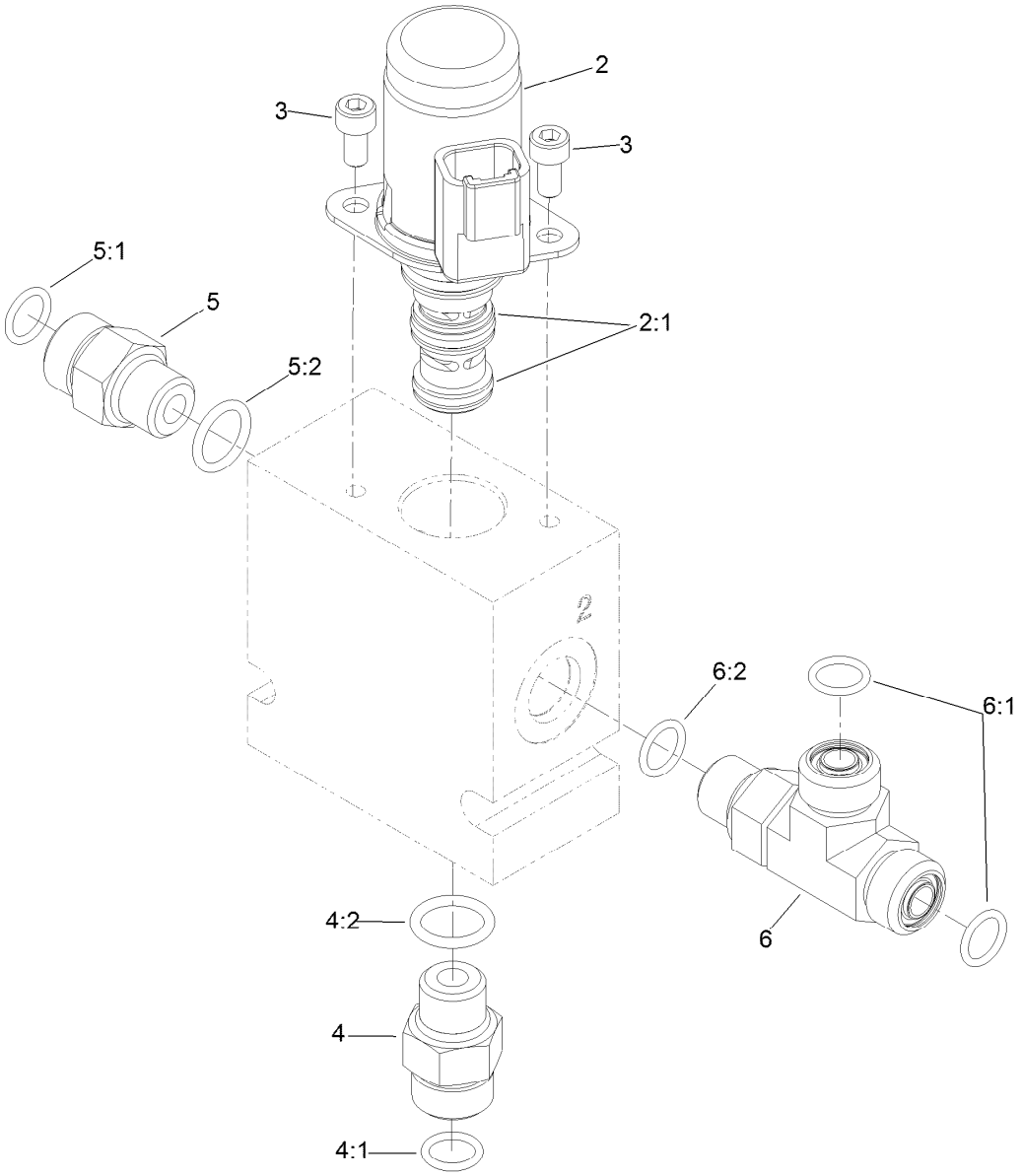

3 Way Valve Manifold Assembly No. 121-3077

Ref.	*Part Number*	*Qty.*	*Description*
2	125-7554	1	Valve-Solenoid, 12 Vdc
2:1	125-7561	1	Seal Kit
3	115-8733	2	Screw -HSH
4	340-2	1	Fitting-HYD, Straight
4:1	237-22	1	O-Ring
4:2	237-42	1	O-Ring
5	92-9258	1	Adapter-Check
5:1	237-22	1	O-Ring
5:2	237-42	1	O-Ring
6	340-86	1	Fitting-Tee
6:1	237-22	2	O-Ring
6:2	237-42	1	O-Ring

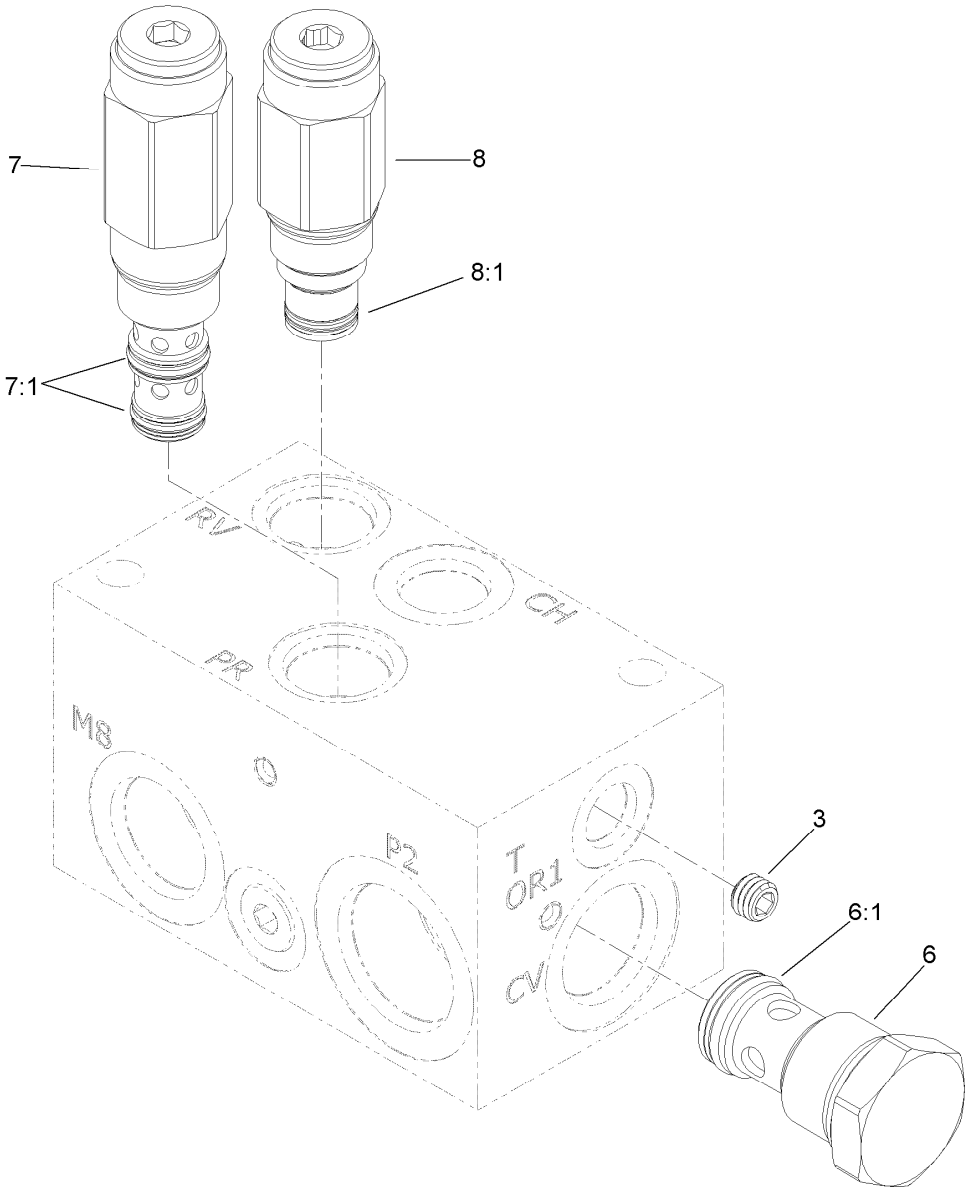

Rear Traction Manifold Assembly No. 121-3078

Ref.	*Part Number*	*Qty.*	*Description*
3	110-0495	1	Orifice (.050)
6	125-4328	1	Valve-Check
6:1	125-4336	1	Seal Kit
7	125-7567	1	Valve-Pressure Reducing
7:1	125-4334	1	Seal Kit
8	125-7566	1	Valve-Relief
8:1	110-6316	1	Seal Kit

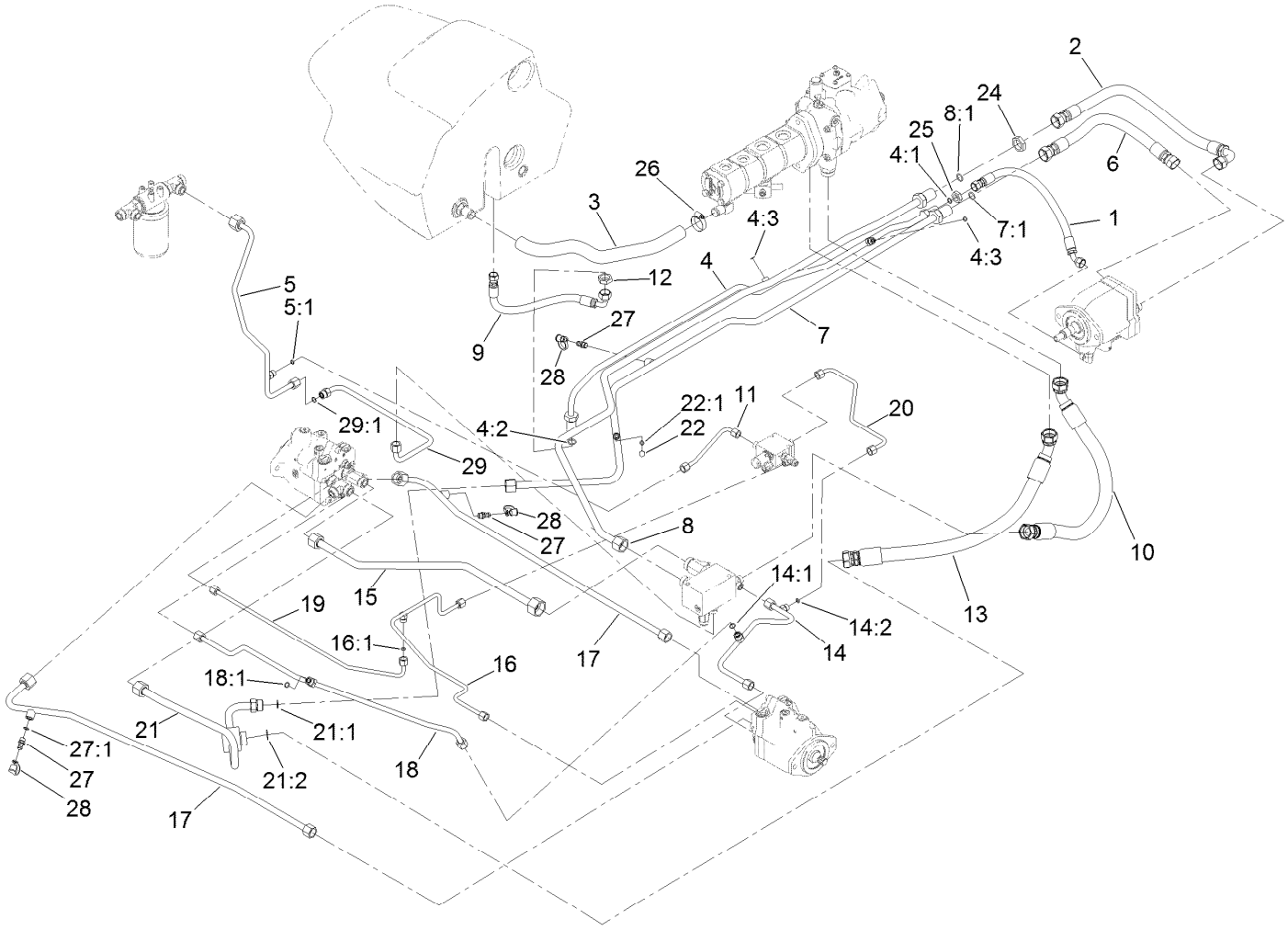

Traction Hydraulic Circuit Assembly

Ref.	Part Number	Qty.	Description
1	92-2406	1	Hose-HYD
2	104-3789	1	Filter Hose ASM
3	115-4447	1	Hose-Suction
4	130-1647	1	Tube ASM
4:1	237-30	1	O-Ring
4:2	237-65	1	O-Ring
4:3	237-22	2	O-Ring
5	120-8047	1	Tube ASM
5:1	237-22	1	O-Ring
6	120-8053	1	Hose ASM
7	120-8079	1	Tube ASM
7:1	237-58	1	O-Ring
8	130-1653	1	Tube ASM
8:1	237-58	1	O-Ring
9	120-8097	1	Hose ASM
10	125-4559	1	Hose ASM
11	125-4566	1	Tube ASM
12	340-74	1	Nut-Lock, Bulkhead
13	130-1642	1	Hose ASM
14	130-1620	1	Tube ASM
14:1	237-30	1	O-Ring

Ref.	Part Number	Qty.	Description
14:2	237-22	1	O-Ring
15	130-1621	1	Tube ASM
16	130-1622	1	Tube ASM
16:1	237-22	1	O-Ring
17	130-1623	2	Tube ASM
18	130-1624	1	Tube ASM
18:1	237-30	1	O-Ring
19	130-1625	1	Tube ASM
20	130-1627	1	Tube ASM
21	130-1629	1	Tube ASM
21:1	237-58	1	O-Ring
21:2	340-65	1	O-Ring
22	353-512	1	Plug
22:1	237-78	1	O-Ring
24	340-126	2	Nut-Bulkhead
25	340-127	1	Nut-Bulkhead
26	2412-111	1	Clamp
27	59-7410	3	Fitting-Diagnostic
27:1	237-42	1	O-Ring
28	354-79	3	Cap-Dust

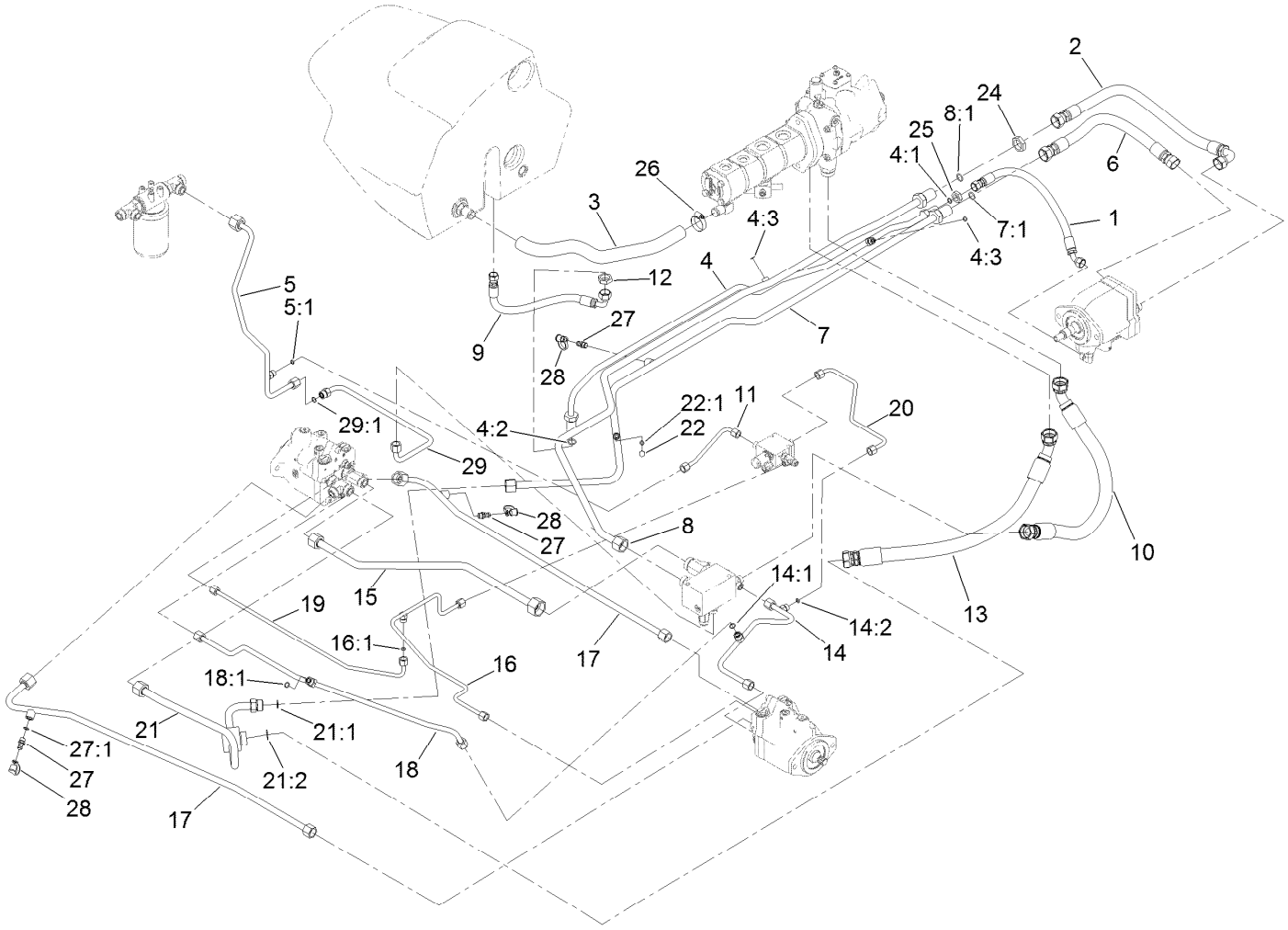

Traction Hydraulic Circuit Assembly (continued)

Ref.	*Part Number*	*Qty.*	*Description*
29	125-4570	1	Tube ASM
29:1	237-30	1	O-Ring

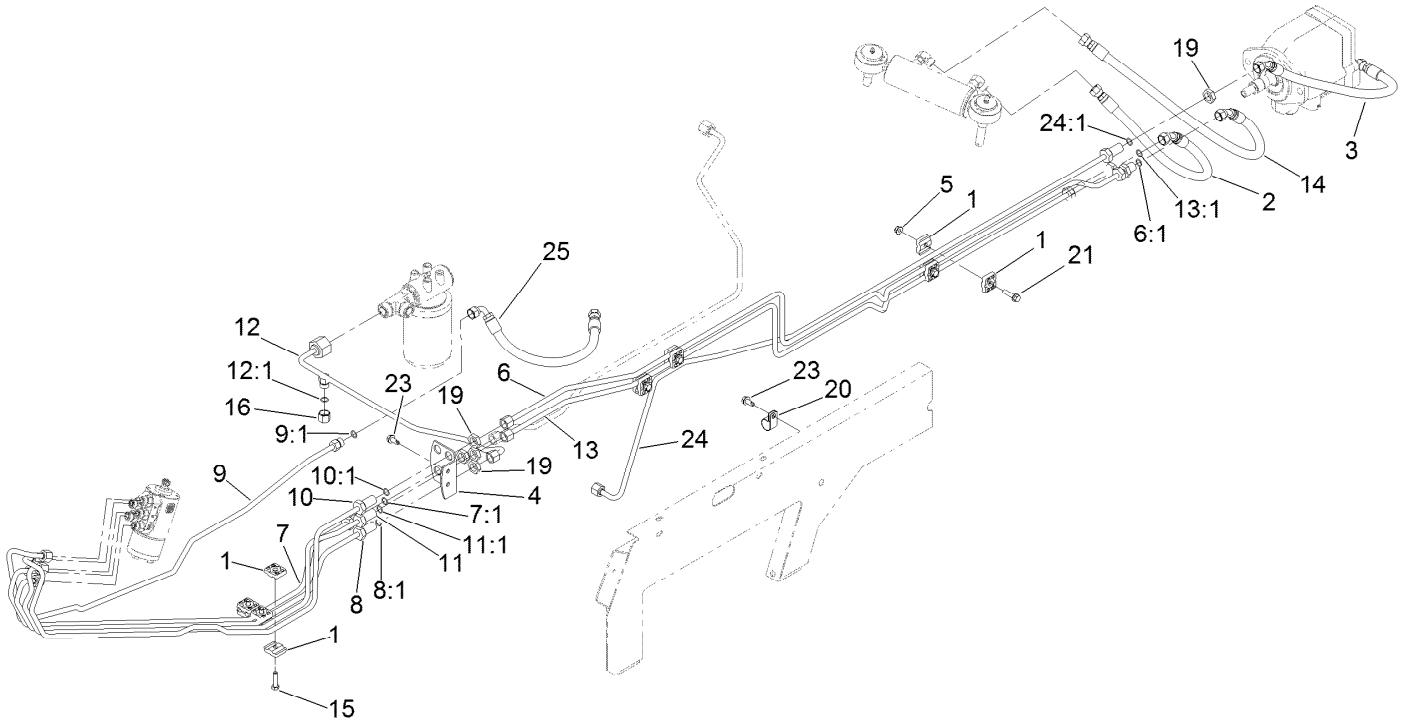

Steering Hydraulic Circuit Assembly

Ref.	Part Number	Qty.	Description
1	56-7973	14	Clamp-Tube
2	92-7539	1	Hose-HYD
3	92-7595	1	Hose-HYD
4	92-7606-03	1	Bracket-Bulkhead
5	104-8300	4	Nut-Flange, NI
6	105-3871	1	Tube ASM
6:1	237-22	1	O-Ring
7	115-4405	1	Tube ASM
7:1	237-22	1	O-Ring
8	115-4406	1	Tube ASM
8:1	237-22	1	O-Ring
9	130-1635	1	Tube ASM
9:1	237-22	1	O-Ring
10	115-4408	1	Tube ASM
10:1	237-22	1	O-Ring
11	115-4409	1	Tube ASM

Ref.	Part Number	Qty.	Description
11:1	237-22	1	O-Ring
12	115-4412	1	Tube ASM
12:1	237-22	1	O-Ring
13	115-9128	1	Tube ASM
13:1	237-22	1	O-Ring
14	125-4560	1	Hose ASM
15	119-4036	3	Screw-HHF
16	340-117	1	Cap
19	340-70	7	Nut-Lock
20	2412-81	1	Clamp-R
21	115-1794	4	Screw-HHF
23	32104-32	3	Screw-HWH
24	120-8052	1	Tube ASM
24:1	237-22	1	O-Ring
25	92-5694	1	Hose-Hydraulic

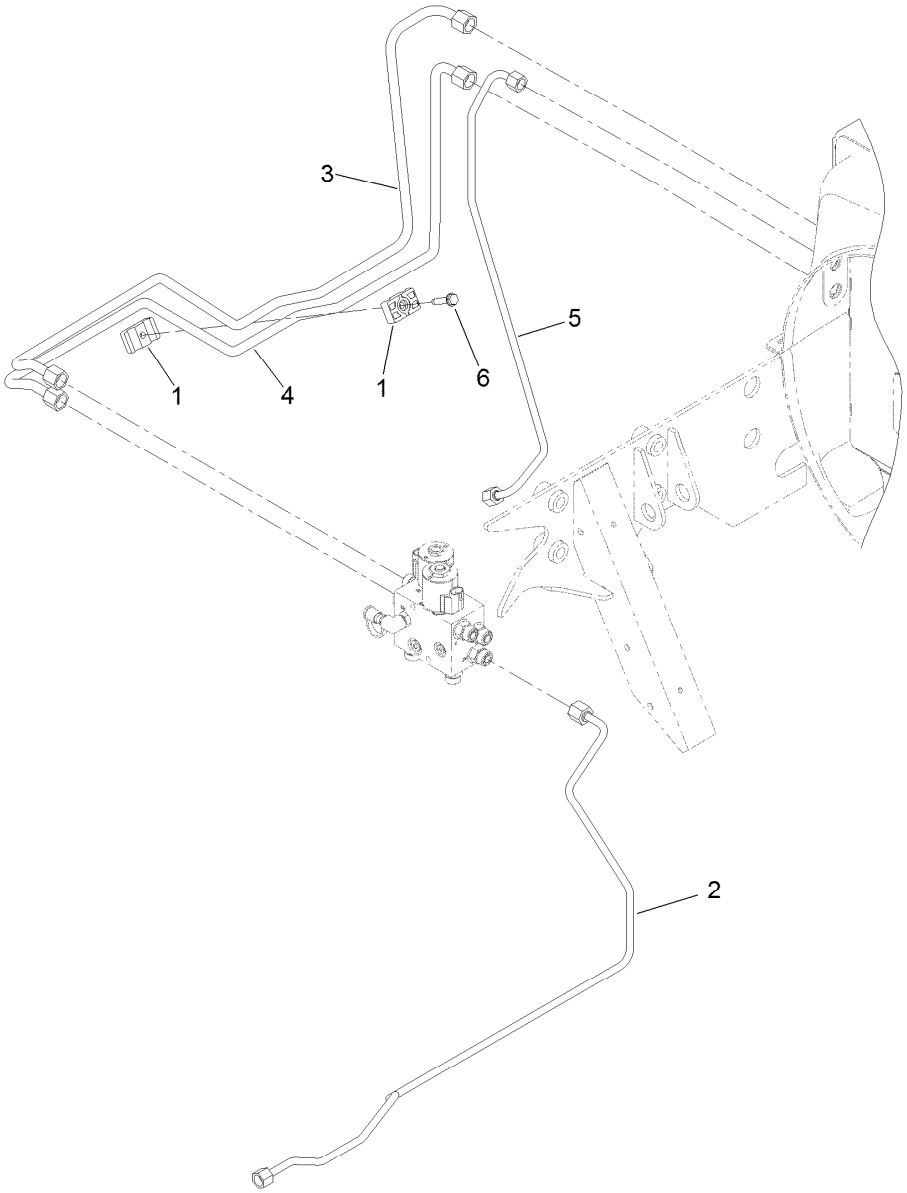

Fan Drive Hydraulic Circuit Assembly

Ref.	*Part Number*	*Qty.*	*Description*
1	56-7976	2	Clamp-Tube
2	115-4422	1	Tube-HYD
3	125-4599	1	Tube ASM
4	125-4601	1	Tube ASM
5	125-4602	1	Tube ASM
6	32144-57	1	Screw

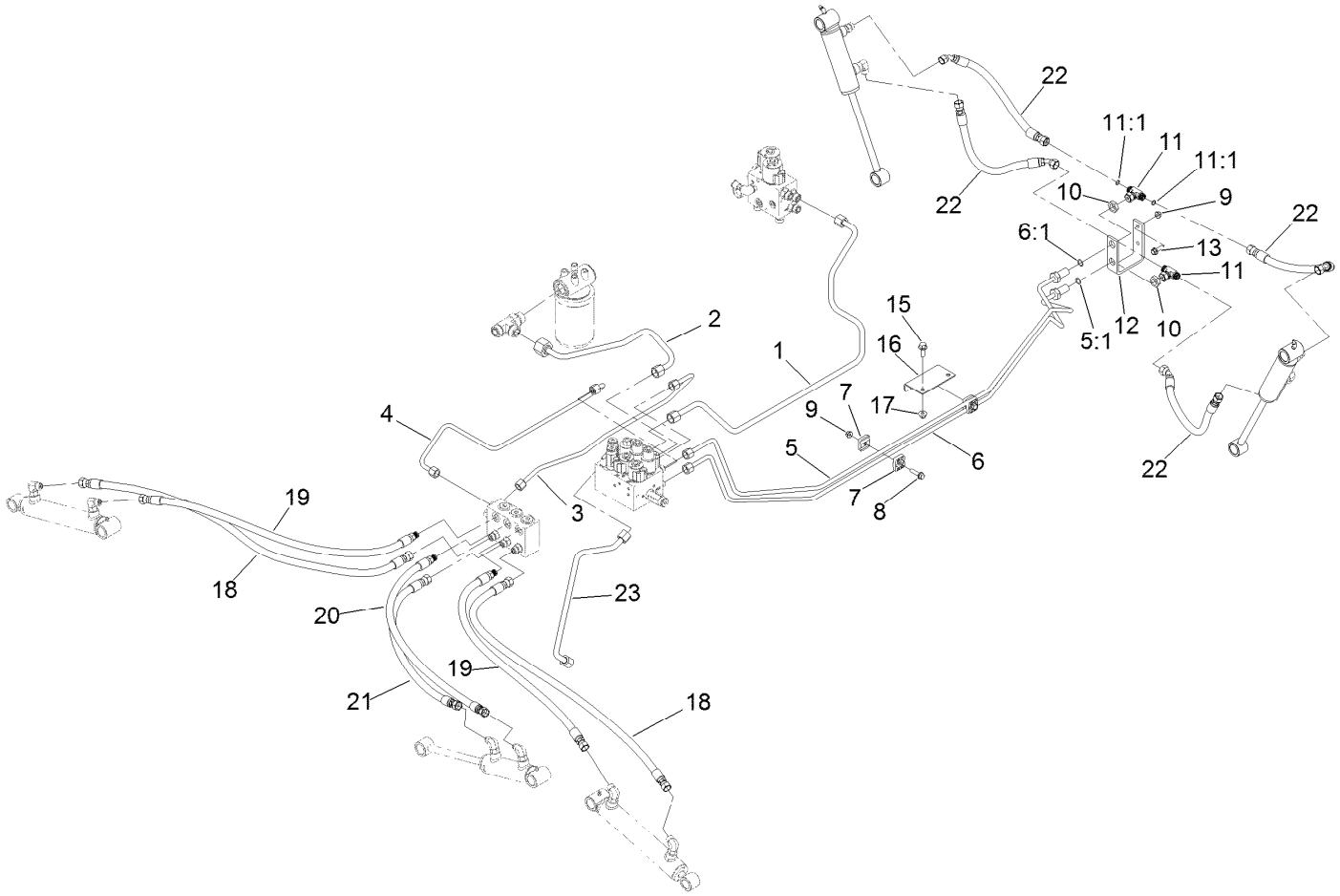

Lift Circuit Hydraulic Assembly

Ref.	Part Number	Qty.	Description
1	119-1467	1	Tube-HYD
2	130-1648	1	Tube ASM
3	119-1470	1	Tube-HYD
4	119-1471	1	Tube-HYD
5	119-1472	1	Tube-HYD
5:1	237-22	1	O-Ring
6	119-1473	1	Tube-HYD
6:1	237-22	1	O-Ring
7	56-7973	4	Clamp-Tube
8	115-1794	2	Screw-HHF
9	104-8300	4	Nut-Flange, NI
10	340-70	2	Nut-Lock
11	340-166	2	Fitting-Tee, HYD

Ref.	Part Number	Qty.	Description
11:1	237-22	2	O-Ring
12	105-3992-03	1	Bracket-Bulkhead
13	3234-17	2	Screw-HHF
15	3234-11	2	Screw-HHF
16	105-3990-03	1	Bracket-Support, Tube
17	104-8301	2	Nut-Flange, NI
18	119-3924	2	Hose ASM
19	130-1672	2	Hose ASM
20	119-8632	1	Hose ASM-HYD
21	119-1433	1	Hose ASM
22	105-9238	4	Hose-HYD
23	130-1640	1	Tube ASM

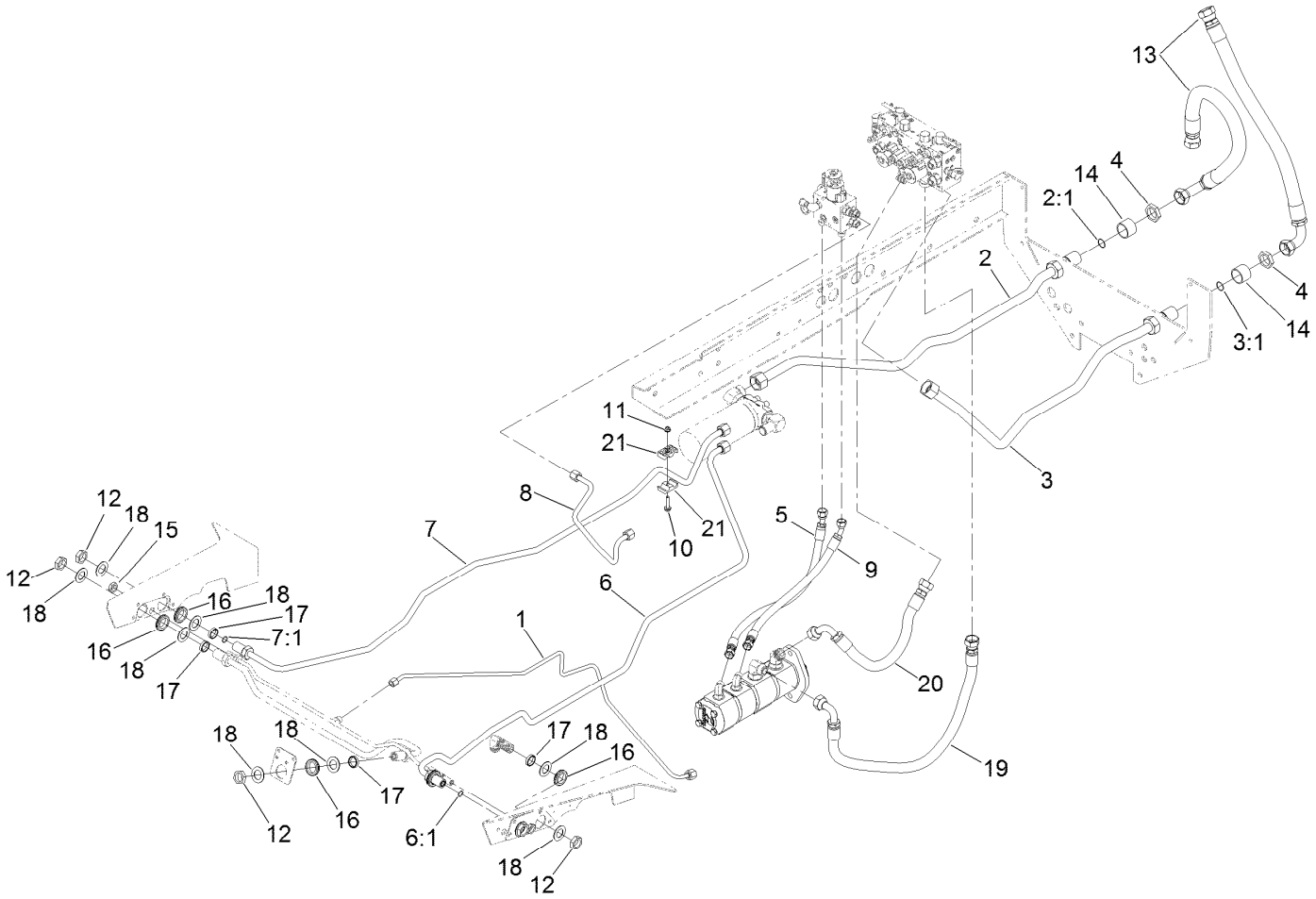

Hydraulic Mow Circuit Assembly

Ref.	Part Number	Qty.	Description
1	130-1626	1	Tube ASM
2	125-4573	1	Tube ASM
2:1	340-65	1	O-Ring
3	125-4574	1	Tube ASM
3:1	340-65	1	O-Ring
4	340-128	2	Nut-Bulkhead
5	115-4438	1	Hose-HYD
6	119-1453	1	Tube-HYD
6:1	237-65	1	O-Ring
7	119-1454	1	Tube-HYD
7:1	237-65	1	O-Ring
8	119-1469	1	Tube-HYD
9	115-4439	1	Hose-HYD

Ref.	Part Number	Qty.	Description
10	115-1794	1	Screw-HHF
11	104-8300	1	Nut-Flange, NI
12	340-74	5	Nut-Lock, Bulkhead
13	108-1689	2	Hose-HYD
14	125-4577	2	Spacer
15	340-70	2	Nut-Lock
16	240-3	5	Grommet-Rubber
17	125-1984	5	Spacer
18	69-9010	10	Washer
19	115-4384	1	Hose-HYD
20	117-4762	1	Hose-HYD
21	56-7971	2	Clamp-Tube

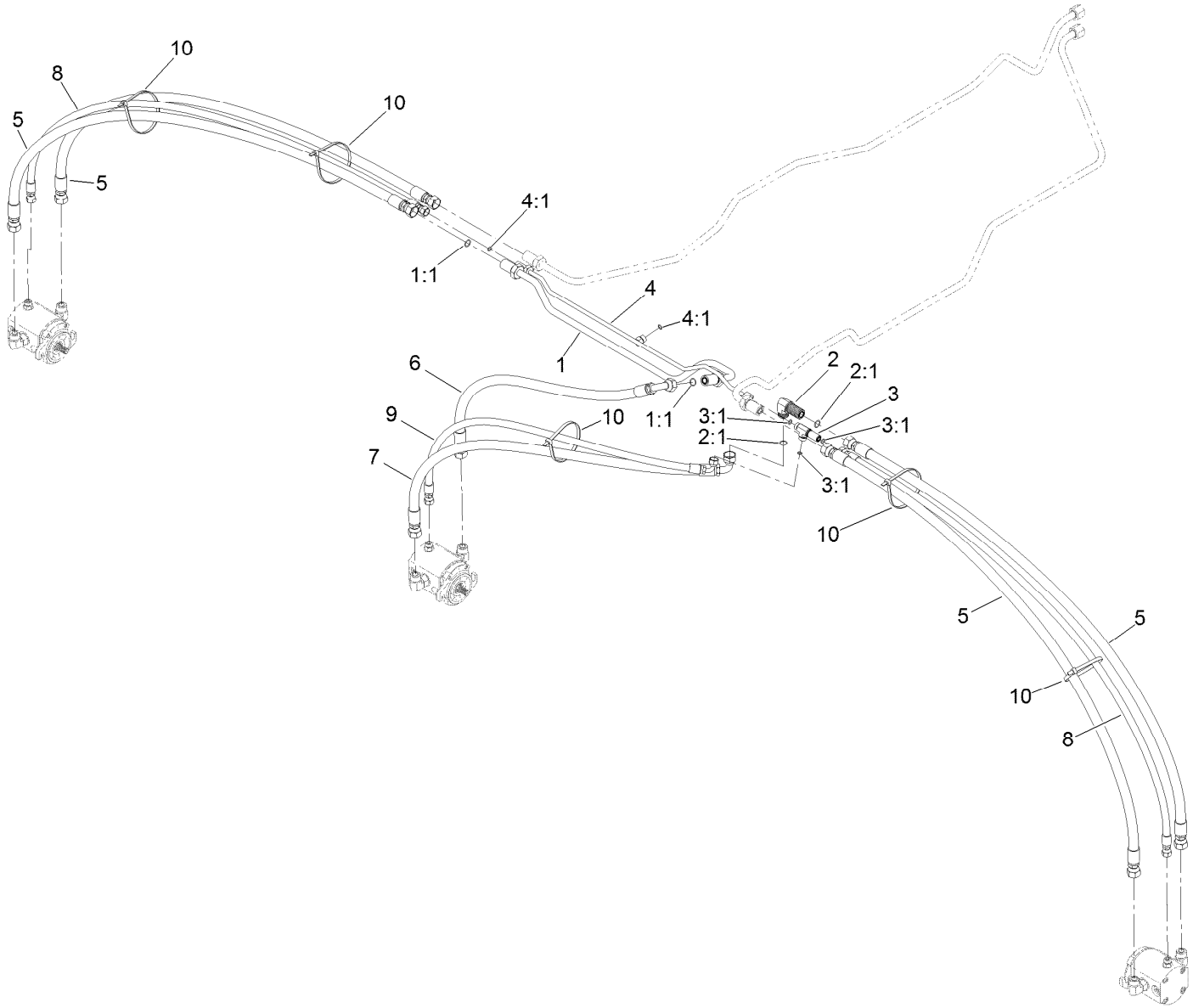

Front Mow Circuit Hydraulic Assembly

Ref.	*Part Number*	*Qty.*	*Description*
1	119-1466	1	Tube-HYD
1:1	237-65	2	O-Ring
2	340-72	1	Fitting-Bulkhead, 90 DEG
2:1	237-65	2	O-Ring
3	340-68	1	Fitting-Tee, Bulkhead
3:1	237-22	3	O-Ring
4	130-1643	1	Tube ASM
4:1	237-22	2	O-Ring
5	125-1653	4	Hose ASM
6	125-1655	1	Hose ASM
7	98-7402	1	Hose ASM
8	119-3912	2	Hose ASM
9	119-3911	1	Hose ASM
10	3334-945	5	Tie-Cable

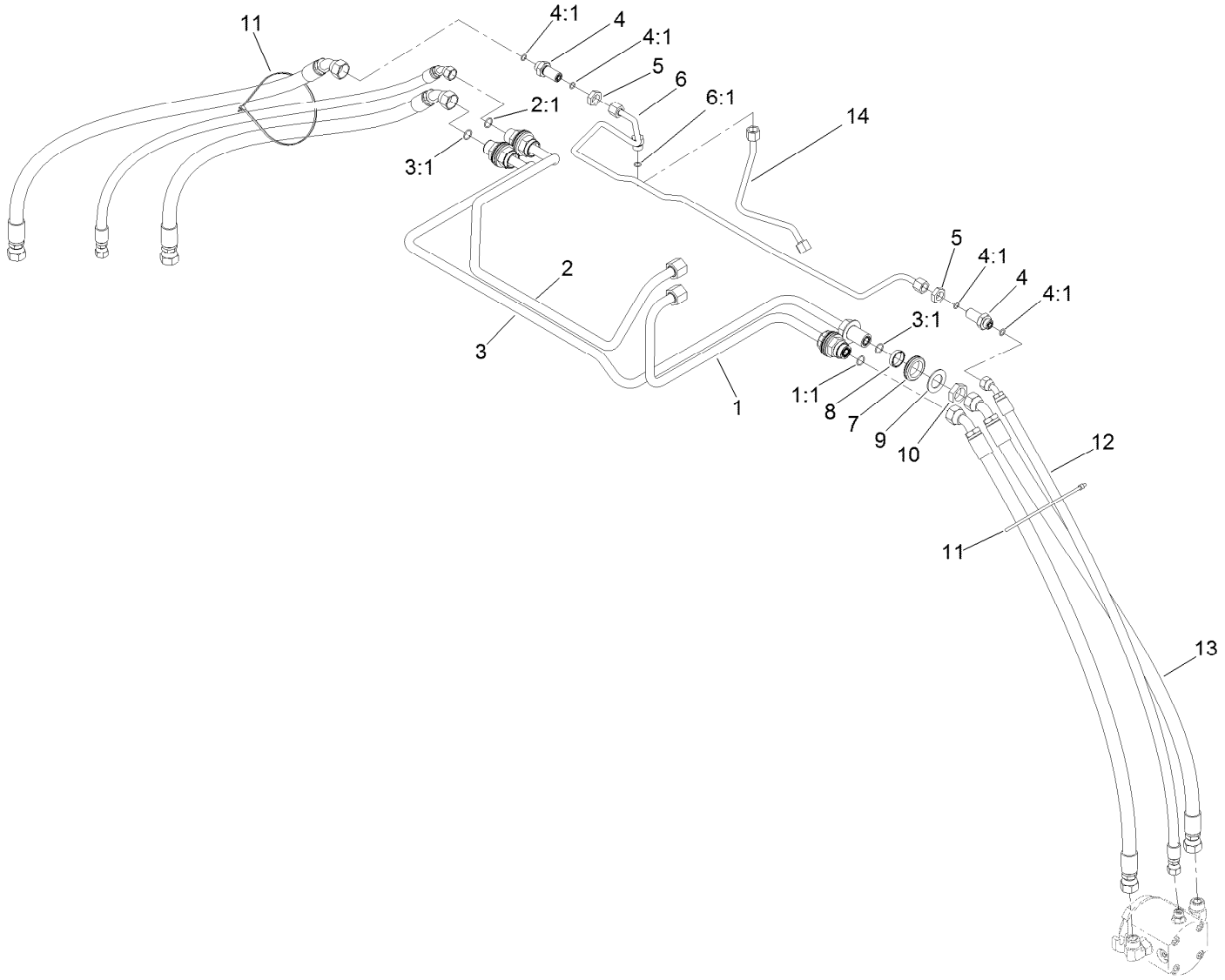

Rear Hydraulic Mow Circuit Assembly

Ref.	Part Number	Qty.	Description
1	119-1455	1	Tube-HYD
1:1	237-65	1	O-Ring
2	119-1456	1	Tube-HYD
2:1	237-65	1	O-Ring
3	119-1465	1	Tube-HYD
3:1	237-65	2	O-Ring
4	340-71	2	Fitting-Straight, Bulkhead
4:1	237-22	2	O-Ring
5	340-70	2	Nut-Lock
6	130-1630	1	Tube ASM

Ref.	Part Number	Qty.	Description
6:1	237-22	1	O-Ring
7	240-3	4	Grommet-Rubber
8	125-1984	4	Spacer
9	69-9010	8	Washer
10	340-74	4	Nut-Lock, Bulkhead
11	3290-379	2	Tie-Cable
12	119-3914	2	Hose ASM
13	119-3913	4	Hose ASM
14	130-1631	1	Tube ASM

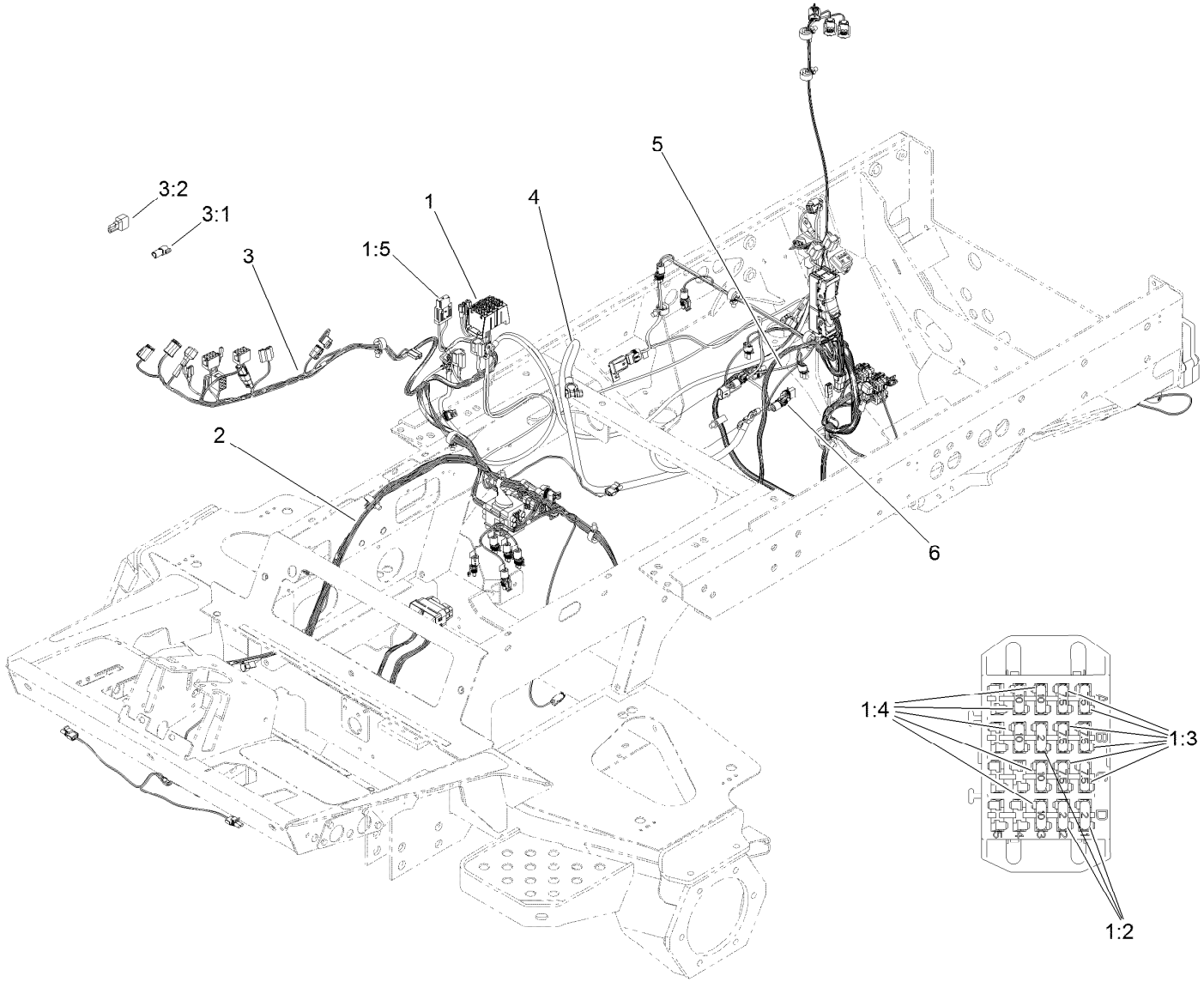

Main Electrical Assembly

Ref.	Part Number	Qty.	Description
1	121-8857	1	Harness-Wire, Power Center
1:2	121-8861	3	Fuse-Mini Blade, 2 Amp
1:3	121-8865	6	Fuse-Mini Blade, 7.5 Amp
1:4	121-8866	5	Fuse-Mini Blade, 10 Amp
1:5	114-3342	1	Fuse-Maxi, 60 Amp
2	122-0261	1	Harness-Wire, Main-Engine
3	122-0264	1	Harness-Wire, Seat/Console
3:1	32180-043	1	Resistor-120 Ohm
3:2	104-4022	1	Resistor-75 Ohm
4	117-2377	1	Cable-Battery, Negative
5	108-9470	1	Harness-Wire, Fusible Link
6	117-2370	1	Harness-Ground

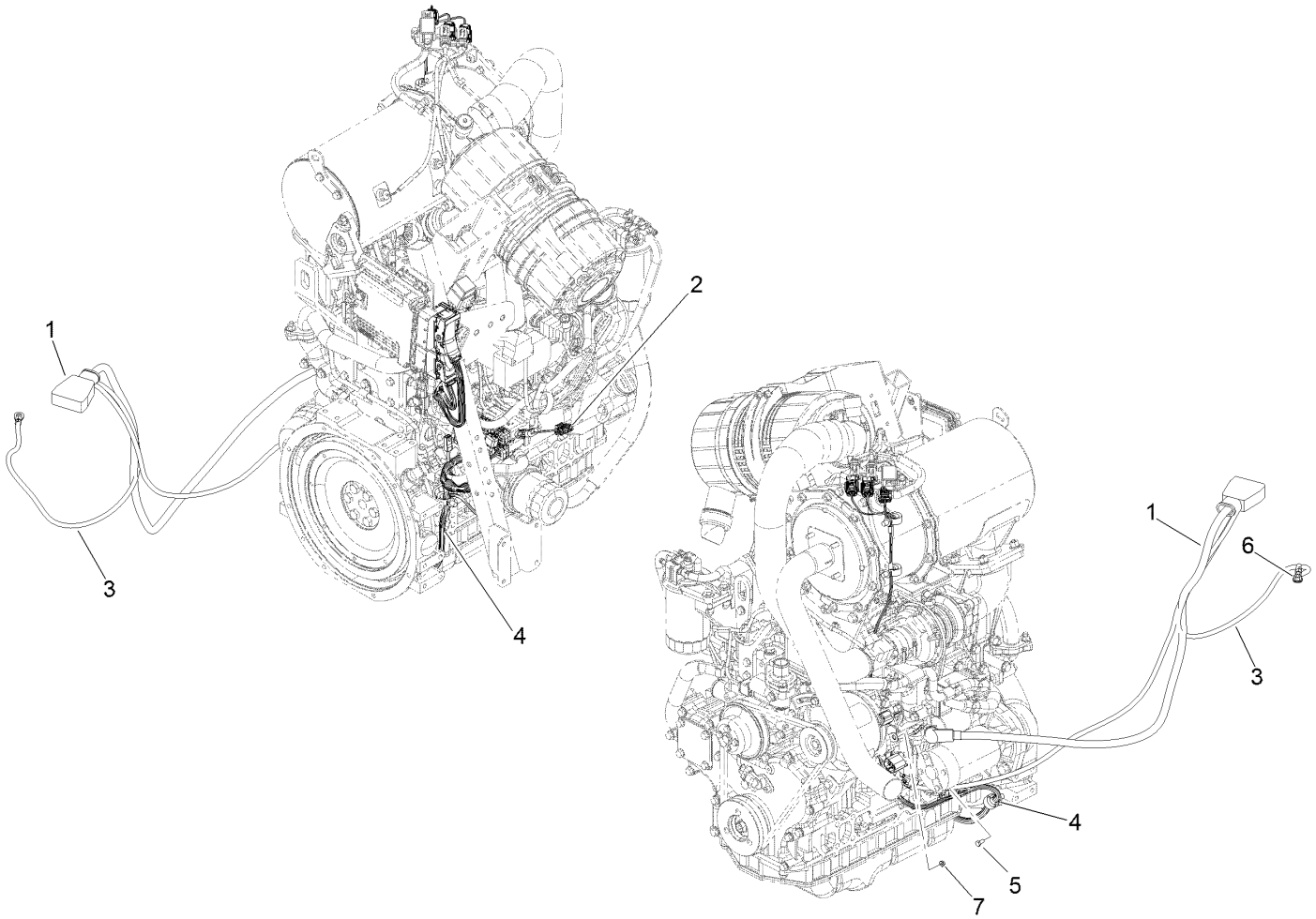

Battery and Engine Electrical Assembly

Ref.	*Part Number*	*Qty.*	*Description*
1	121-6589	1	Cable-Battery, Positive
2	115-1931	1	Harness-Wire, Fuel Pump Adapter
3	115-1930	1	Cable-Battery, Positive
4	122-0230	1	Harness-Wire
5	33115-020	1	Screw-HH
6	33004-00	1	Nut-HF
7	33003-00	1	Nut-HF

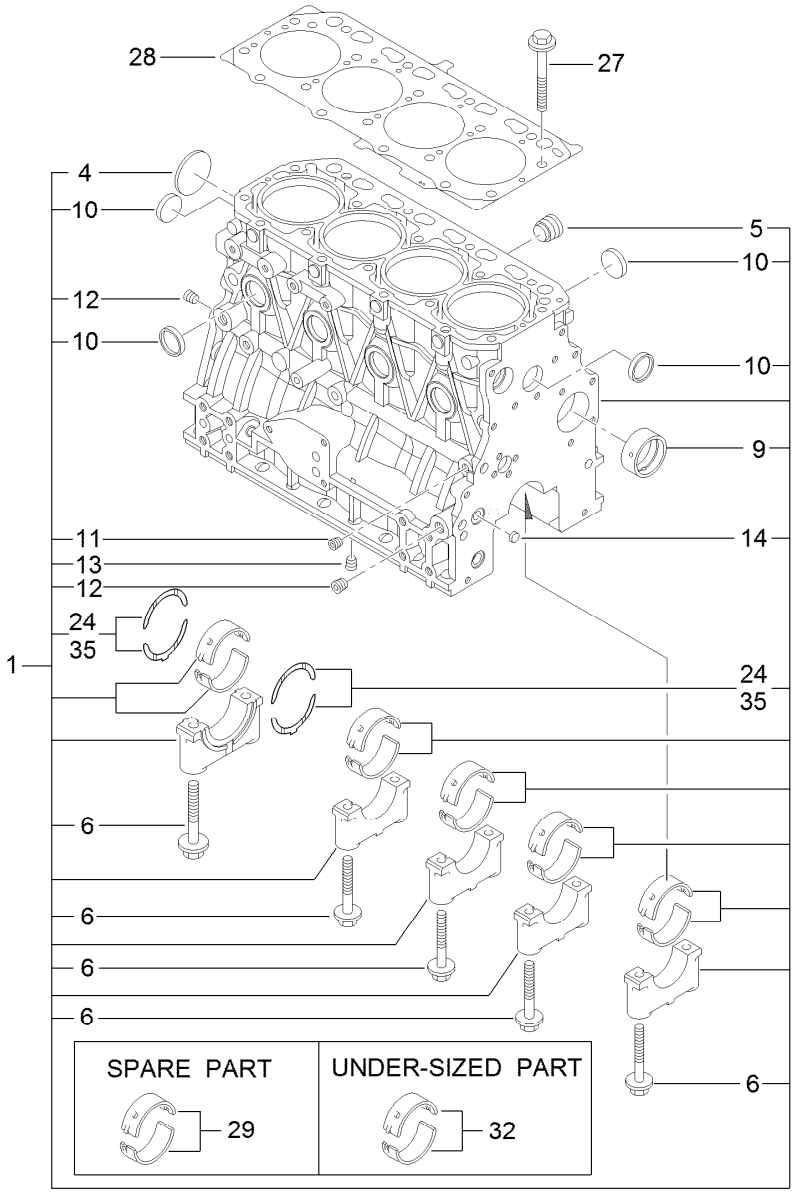

Cylinder Block Assembly

Ref.	Part Number	Qty.	Description
1	127-3127	1	Cylinder Block ASM
4	125-6980	1	Plug
5	125-7170	1	Plug
6	125-7007	10	Bolt
9	125-7108	1	Bushing
10	125-7239	8	Plug
11	125-6969	1	Plug
12	125-6973	2	Plug

Ref.	Part Number	Qty.	Description
13	125-6973	1	Plug
14	125-7237	1	Plug
24	125-7010	2	Metal-Thrust
27	125-7006	18	Bolt
28	127-3126	1	Gasket-Head, Cylinder
29	125-6981	5	Metal-Main
32	125-7009	5	Metal-Main (0.25)
35	125-7011	1	Metal-Thrust (0.25)

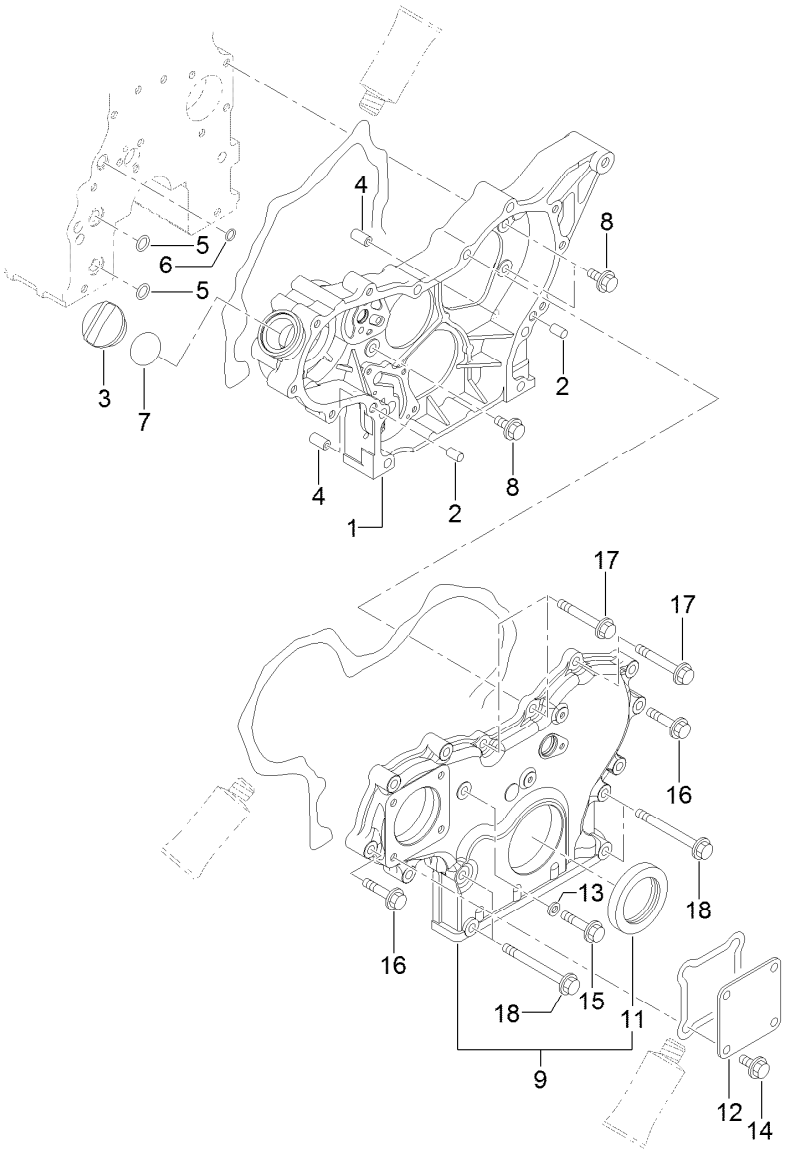

Gear Housing Assembly

Ref.	Part Number	Qty.	Description
1	127-3023	1	Case-Gear
2	125-6995	2	Pin
3	125-6972	1	Cover
4	125-7107	2	Pipe
5	125-6909	2	O-Ring
6	127-2973	1	O-Ring
7	125-7197	1	O-Ring
8	125-7214	3	Bolt
9	127-3024	1	Gearcase Cover ASM

Ref.	Part Number	Qty.	Description
11	125-6944	1	Seal-Oil
12	125-6977	1	Cover
13	125-7174	1	Washer-Seal
14	125-7214	4	Bolt
15	125-7217	1	Bolt
16	125-7218	7	Bolt
17	125-7222	3	Bolt
18	125-7224	4	Bolt

Cylinder Head and Cover Assembly

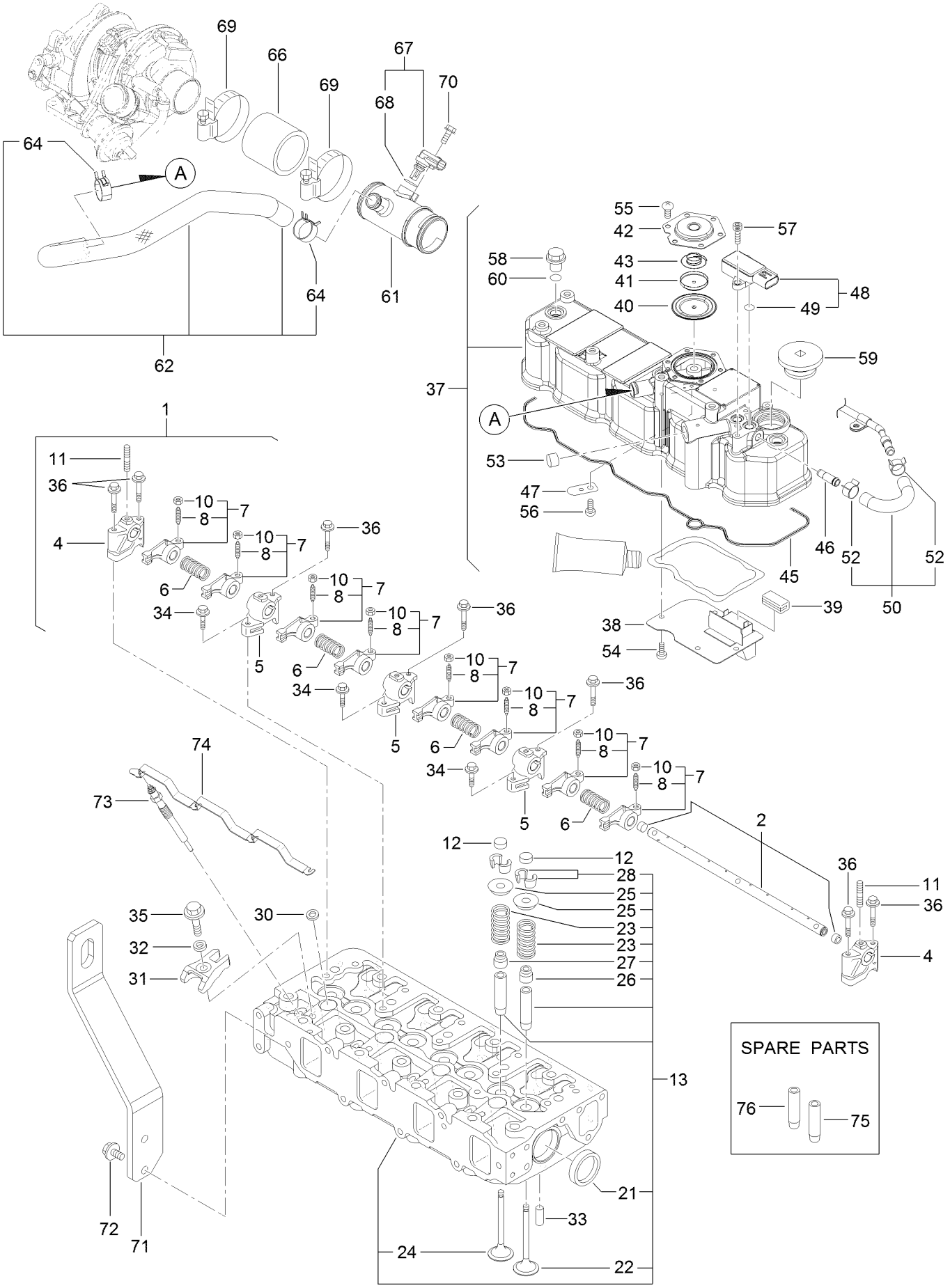

Cylinder Head and Cover Assembly (continued)

Ref.	Part Number	Qty.	Description
1	127-3005	1	Shaft ASM
2	127-3006	1	Shaft
4	127-2974	2	Support
5	127-2975	3	Support
6	127-2995	4	Spring
7	127-2989	8	Arm-Rocker
8	125-7013	8	Screw
10	125-7014	8	Nut
11	127-3183	3	Stud
12	127-2996	8	Cap
13	127-3132	1	Cylinder Head ASM
21	125-7240	2	Plug
22	127-2990	4	Valve
23	127-3012	8	Spring
24	127-2994	4	Valve
25	127-3013	8	Retainer
26	127-2986	4	Seal-Stem, Valve
27	127-3027	4	Seal-Stem, Valve
28	127-3186	8	Pin-Cotter
30	127-3021	4	Gasket-Injector
31	127-3028	4	Retainer-Injector
32	127-2980	4	Washer
33	125-7184	2	Pin-Spring
34	125-7215	3	Bolt
35	125-7217	4	Bolt
36	125-7220	7	Bolt
37	127-3131	1	Cylinder Head Cover ASM
38	127-2988	1	Plate
39	125-7012	1	Baffle
40	125-6959	1	Diaphragm
41	125-6960	1	Plate
42	125-6961	1	Plate
43	125-6962	1	Spring
45	127-3106	1	Gasket-Cover
46	127-3026	1	Joint
47	125-6994	1	Spring
48	127-3029	1	Sensor-Pressure
49	127-3032	2	O-Ring
50	127-3040	1	Hose ASM
52	127-3041	2	Clip-Hose
53	125-6913	1	Plug
54	125-7186	4	Screw
55	125-7186	6	Screw
56	125-7186	1	Screw
57	127-3184	2	Bolt
58	125-6974	3	Knob
59	127-2978	1	Plug
60	93-0418	3	O-Ring
61	127-3128	1	Joint-Breather
62	127-3129	1	Breather Hose ASM
64	125-7040	2	Clip
66	127-3133	1	Hose-Intake
67	127-3030	1	Sensor-Temp, Air
68	127-3033	1	O-Ring
69	125-7190	2	Clamp-Hose
70	125-7208	1	Bolt
71	127-3130	1	Lifter-Engine
72	125-7214	2	Bolt
73	127-2991	4	Plug
74	127-3123	1	Connector-Glow Plug
75	127-2979	4	Guide
76	127-2997	4	Guide

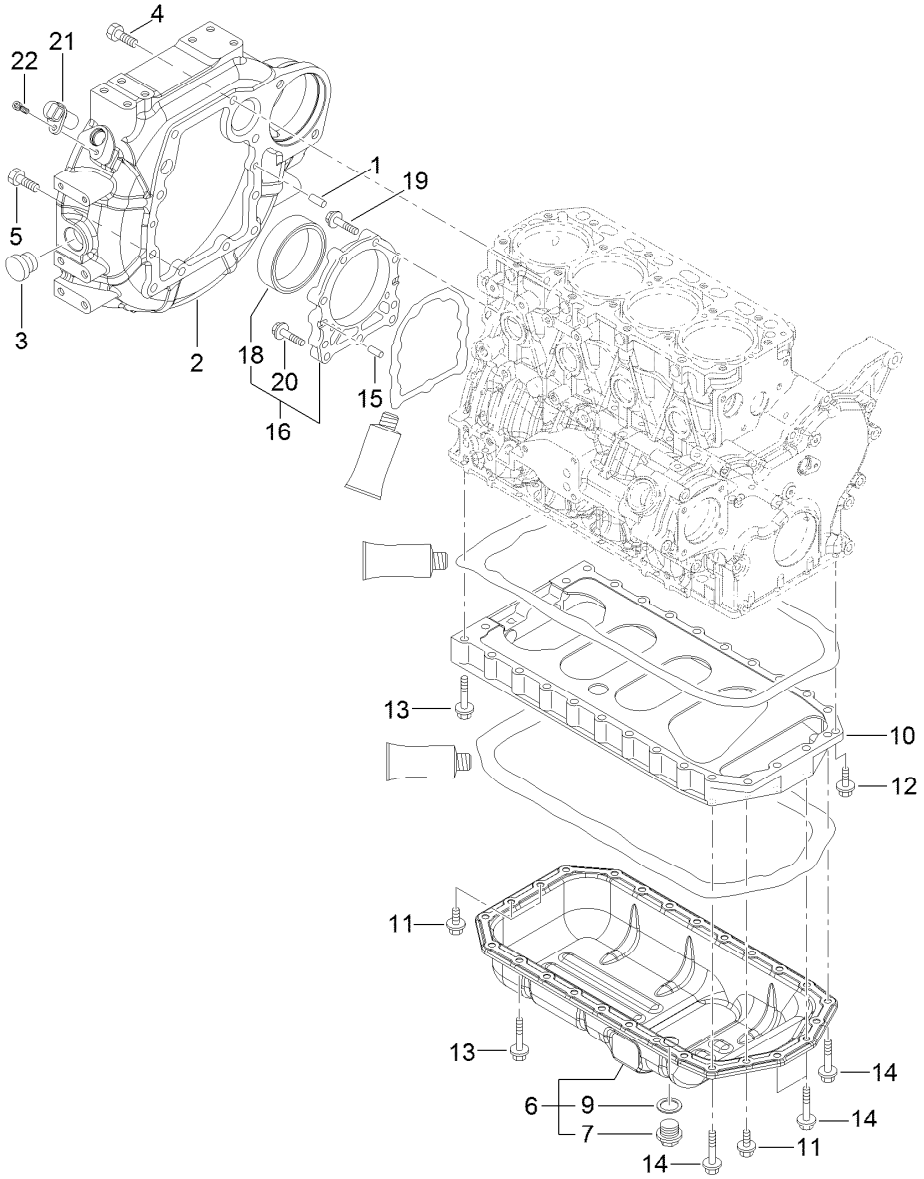

Flywheel Housing and Oil Sump Assembly

Ref.	Part Number	Qty.	Description
1	125-6995	2	Pin
2	127-3025	1	Housing-Flywheel
3	125-6910	1	Cap
4	125-7226	6	Bolt
5	125-7227	4	Bolt
6	125-7241	1	Oil Sump ASM
7	125-6912	1	Plug
9	125-7177	1	Washer-Seal
10	125-7035	1	Spacer
11	125-7214	4	Bolt

Ref.	Part Number	Qty.	Description
12	125-7215	2	Bolt
13	125-7219	20	Bolt
14	125-7220	4	Bolt
15	125-6995	2	Pin
16	125-6996	1	Case ASM
18	125-7106	1	Seal-Oil
19	125-7045	6	Bolt
20	125-7217	3	Bolt
21	127-3062	1	Sensor-Flywheel
22	127-3184	1	Bolt

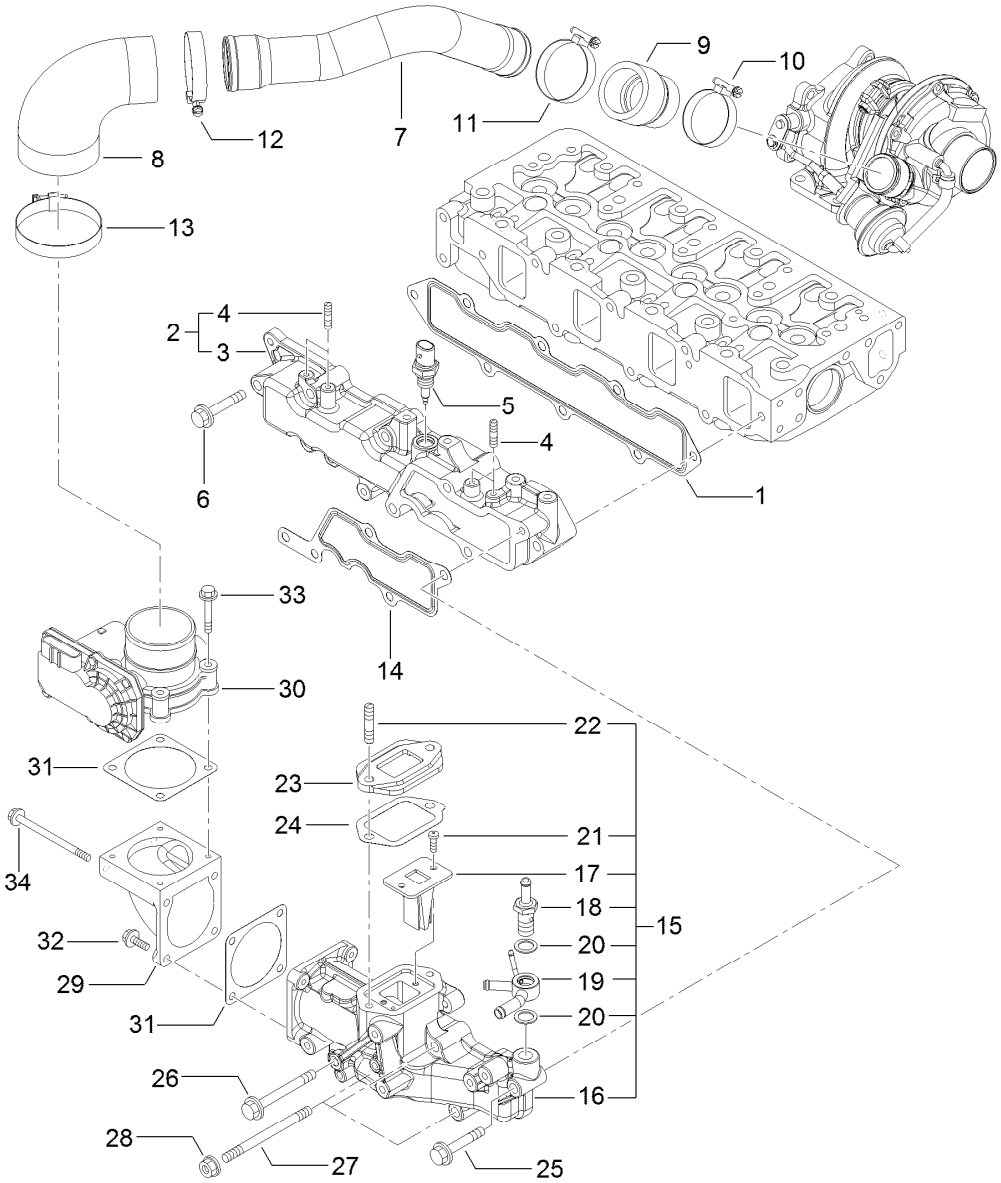

Suction Manifold Assembly

Ref.	Part Number	Qty.	Description
1	127-3107	1	Gasket-Manifold, Intake
2	127-3135	1	Intake Manifold ASM
3	127-3134	1	Manifold-Intake
4	127-3180	4	Stud
5	127-3031	1	Sensor-Temp, Air
6	125-7220	5	Bolt
7	127-3152	1	Duct-Suction
8	127-3096	1	Joint-Rubber
9	127-3153	1	Joint-Rubber
10	125-7189	1	Clamp-Hose
11	127-3170	1	Clamp-Hose
12	125-7190	1	Clamp-Hose
13	127-3171	1	Clamp-Hose
14	127-3034	1	Gasket-Collector
15	127-3093	1	Intake Collector ASM
16	127-3092	1	Collector-Intake
17	127-3139	1	Valve-Reed

Ref.	Part Number	Qty.	Description
18	127-3080	1	Joint-Hose
19	127-3081	1	Joint-Hose
20	127-3166	2	Washer-Seal
21	127-3168	2	Screw
22	127-3181	2	Stud
23	127-3045	1	Spacer-Valve, E G R
24	127-3046	1	Gasket-E G R
25	125-7220	1	Bolt
26	127-3178	1	Bolt
27	127-3182	3	Stud
28	125-7229	3	Nut
29	127-3035	1	Bend-Inlet
30	127-3036	1	Body-Throttle
31	127-3037	2	Gasket-Throttle
32	125-7209	2	Bolt
33	125-7211	4	Bolt
34	127-3177	2	Bolt

Diesel Particulate Filter Assembly

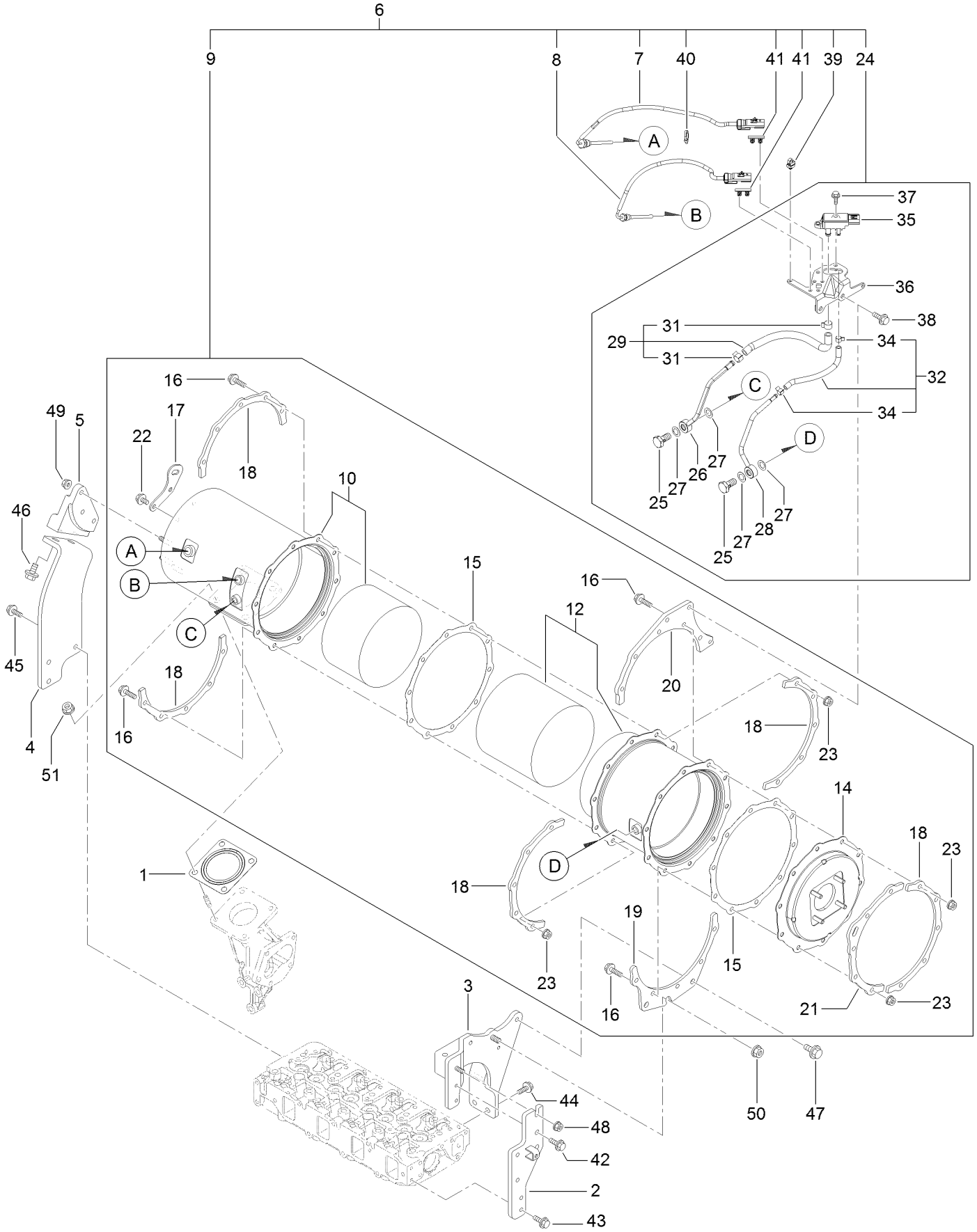

Diesel Particulate Filter Assembly (continued)

Ref.	Part Number	Qty.	Description
1	127-2987	1	Gasket
2	127-3095	1	Stay-D P F
3	127-3148	1	Stay- D P F
4	127-3149	1	Stay-D P F
5	127-3150	1	Stay-D P F
6	127-3159	1	D P F Unit
7	127-3111	1	Sensor-Temp, Exhaust
8	127-3112	1	Sensor-Temp, Exhaust
9	127-3157	1	D P F ASM
10	127-3141	1	Case-Doc
12	127-3142	1	Case-Filter, Soot
14	127-3143	1	Flange-Outlet
15	127-3162	2	Gasket-D P F
16	127-3055	20	Bolt
17	127-3144	1	Lifter-D P F
18	127-3145	5	Stiffener-D P F, A
19	127-3146	1	Stiffener-D P F, B
20	127-3158	1	Stiffener-D P F, D
21	127-3147	1	Stiffener-D P F, C
22	125-7213	2	Bolt
23	125-7229	20	Nut
24	127-3163	1	Pressure Sensor Unit
25	127-3039	2	Bolt-Joint, Pipe
26	127-3164	1	Exhaust Pressure Pipe ASM

Ref.	Part Number	Qty.	Description
27	127-3056	4	Gasket-Sensor
28	127-3165	1	Exhaust Pressure Pipe ASM
29	127-3114	1	Exhaust Hose ASM
31	127-3057	2	Clip-Hose
32	127-3059	1	Hose ASM
34	127-3058	2	Clip-Hose
35	127-3060	1	Sensor-Pressure
36	127-3061	1	Bracket-Sensor, Pressure
37	125-7208	2	Bolt
38	125-7595	2	Bolt
39	127-3087	1	Band-Clip
40	127-3124	1	Band
41	127-3088	2	Clip-Connnector
42	125-7595	2	Bolt
43	125-7595	2	Bolt
44	125-7595	2	Bolt
45	125-7595	3	Bolt
46	127-3179	2	Bolt
47	127-3179	2	Bolt
48	125-7229	1	Nut
49	125-7229	3	Nut
50	125-7230	1	Nut
51	125-7230	4	Nut

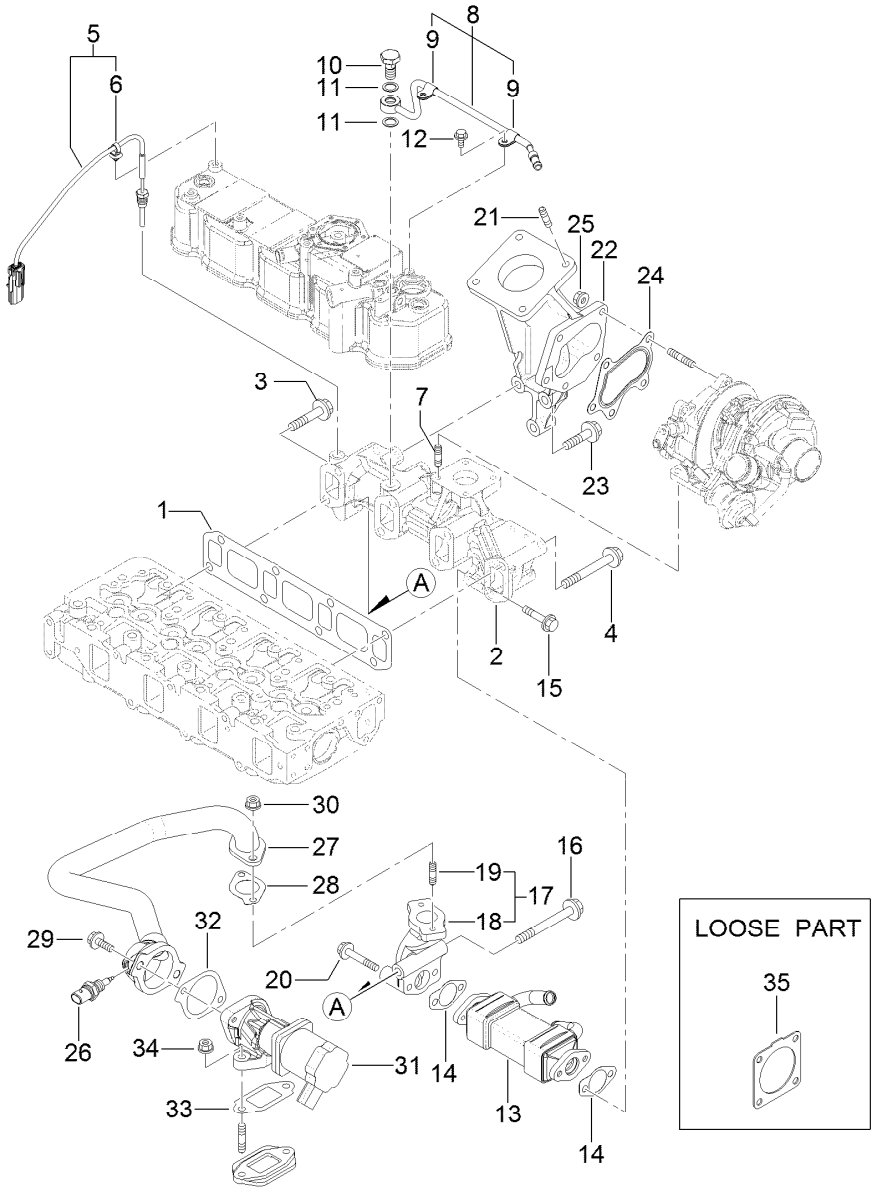

Exhaust Manifold Assembly

Ref.	Part Number	Qty.	Description
1	127-3108	1	Gasket-Manifold, Exhaust
2	127-3136	1	Manifold-Exhaust
3	127-3094	1	Bolt
4	127-3044	7	Bolt-M10
5	127-3140	1	Sensor-Temp, Exhaust
6	127-3087	1	Band-Clip
7	125-7043	4	Stud
8	127-3038	1	Exhaust Pipe ASM
9	127-3173	2	Clamp
10	127-3039	1	Bolt-Joint, Pipe
11	127-3174	2	Gasket
12	125-7206	2	Bolt
13	127-3042	1	Cooler-E G R
14	127-3043	2	Gasket-Cooler, E G R
15	127-2976	2	Bolt
16	127-3022	1	Bolt-Flange
17	127-3048	1	E G R Pipe ASM
18	127-3049	1	Pipe-Out, E G R

Ref.	Part Number	Qty.	Description
19	125-7043	2	Stud
20	125-7220	2	Bolt
21	127-2984	4	Stud
22	127-3137	1	Pipe-Exhaust
23	127-3138	3	Bolt-Flange
24	125-7071	1	Gasket
25	125-7229	5	Nut
26	127-3047	1	Sensor-Gas Temp, E G R
27	127-3109	1	E G R Pipe ASM
28	127-3016	1	Gasket
29	125-7215	2	Bolt
30	125-7229	2	Nut
31	127-3110	1	Valve-E G R
32	127-3050	1	Gasket-Intake Valve, E G R
33	127-3051	1	Gasket-Out Valve, E G R
34	125-7229	2	Nut
35	127-3019	1	Gasket

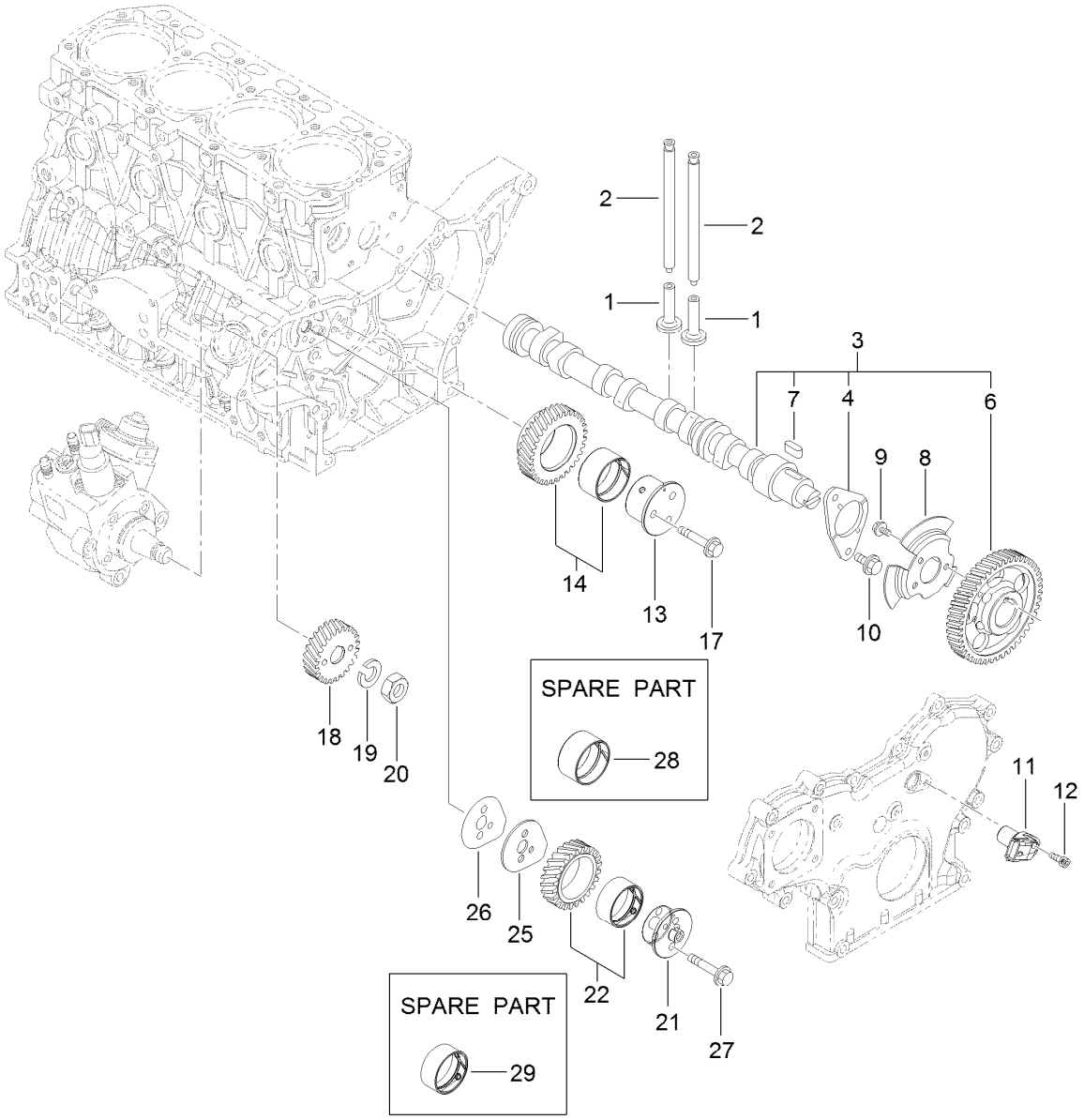

Camshaft and Driving Gear Assembly

Ref.	Part Number	Qty.	Description
1	125-7016	8	Tappet
2	125-7017	8	Rod-Push
3	127-3113	1	Camshaft ASM
4	125-7008	1	Metal-Thrust
6	127-3052	1	Gear-Camshaft
7	125-7185	1	Key
8	127-3053	1	Pulser-Camshaft
9	125-7205	3	Bolt
10	125-7213	2	Bolt
11	127-3054	1	Sensor-Rev, Gear
12	127-3184	1	Bolt
13	127-3063	1	Shaft-Idle, Gear A

Ref.	Part Number	Qty.	Description
14	127-3066	1	Idle Gear A ASM
17	125-7219	3	Bolt
18	127-3070	1	Gear-Pump, Supply
19	127-3167	1	Washer-Spring
20	127-3185	1	Nut
21	127-3064	1	Shaft-Idle, Gear B
22	127-3067	1	Idle Gear B ASM
25	127-3068	1	Plate-Idle, Shaft
26	127-3069	1	Gasket-Idle, Shaft B
27	125-7218	2	Bolt
28	125-6927	1	Bushing
29	127-3065	1	Bushing

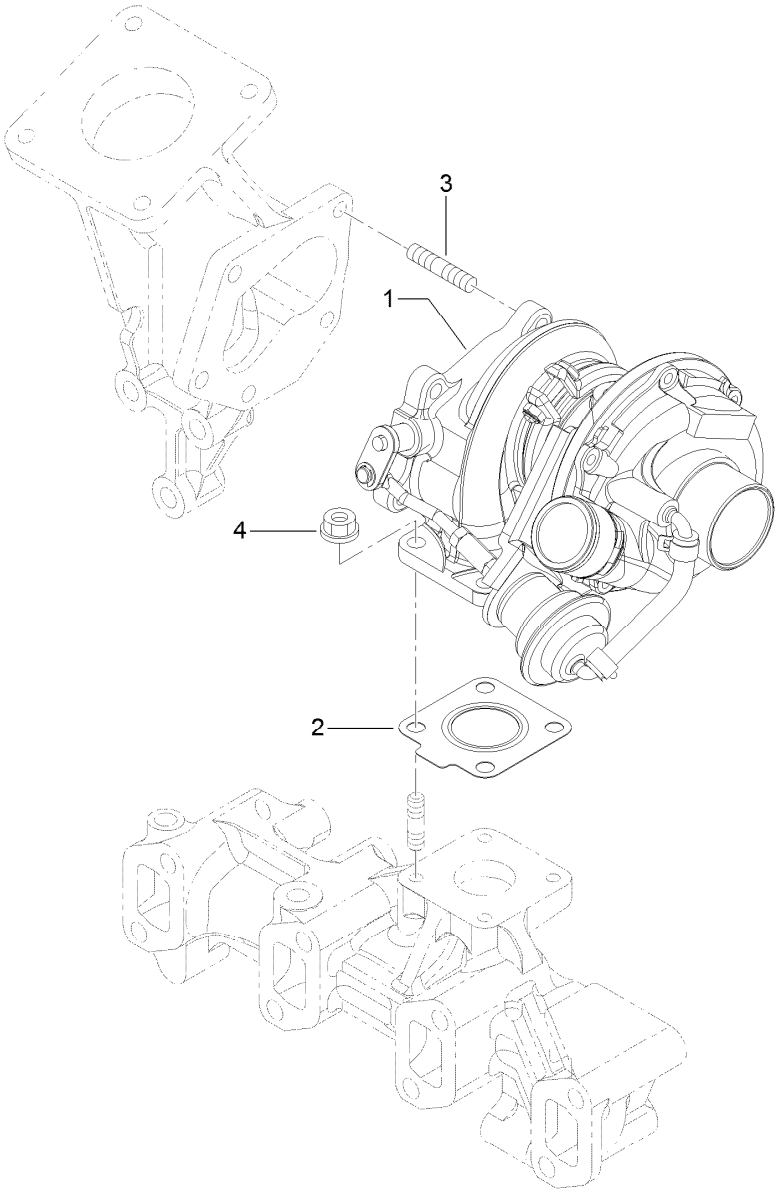

Turbine Assembly

Ref.	Part Number	Qty.	Description
1	127-3151	1	Turbine ASM
2	125-7070	1	Gasket
3	125-6906	5	Stud
4	125-7229	4	Nut

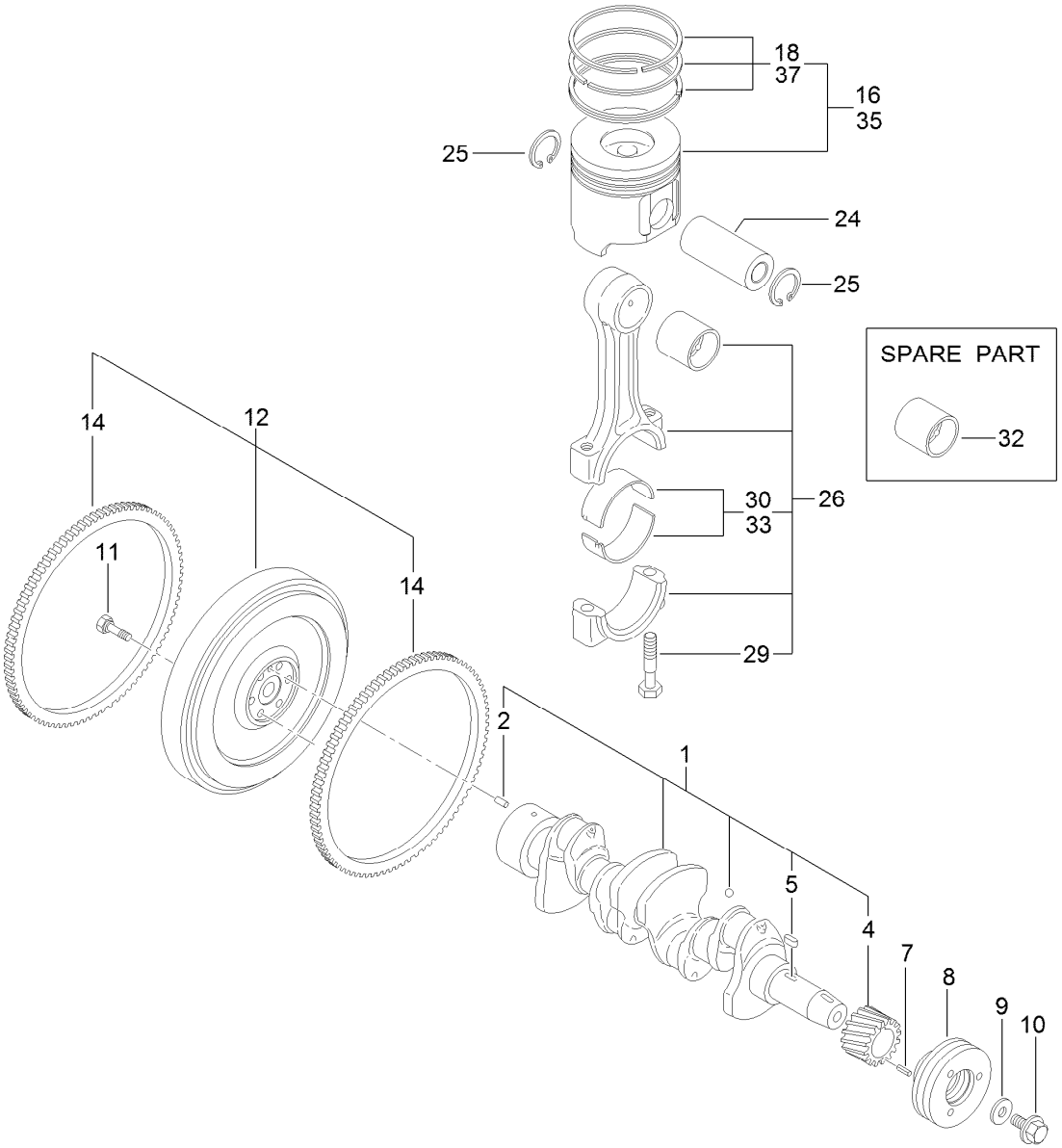

Crankshaft and Piston Assembly

Ref.	Part Number	Qty.	Description
1	125-7091	1	Crankshaft ASM
2	125-6995	1	Pin
4	125-6937	1	Gear
5	125-7185	1	Key
7	125-7182	1	Pin-Spring
8	125-6925	1	V-Pulley
9	125-7109	1	Washer
10	125-6956	1	Bolt
11	125-6951	6	Bolt
12	127-3160	1	Flywheel ASM
14	125-6943	1	Gear

Ref.	Part Number	Qty.	Description
16	127-3097	4	Piston ASM
18	127-3098	4	Piston Ring ASM
24	125-7030	4	Pin
25	125-7180	8	Ring
26	125-7242	4	Connecting Rod ASM
29	125-6955	8	Bolt
30	125-7018	4	Pin-Crank
32	125-6997	4	Pin-Piston
33	125-7019	4	Pin-Crank (.25)
35	127-3099	4	Piston ASM (0.25 O.S.)
37	127-3100	4	Piston Ring ASM (0.25 O.S.)

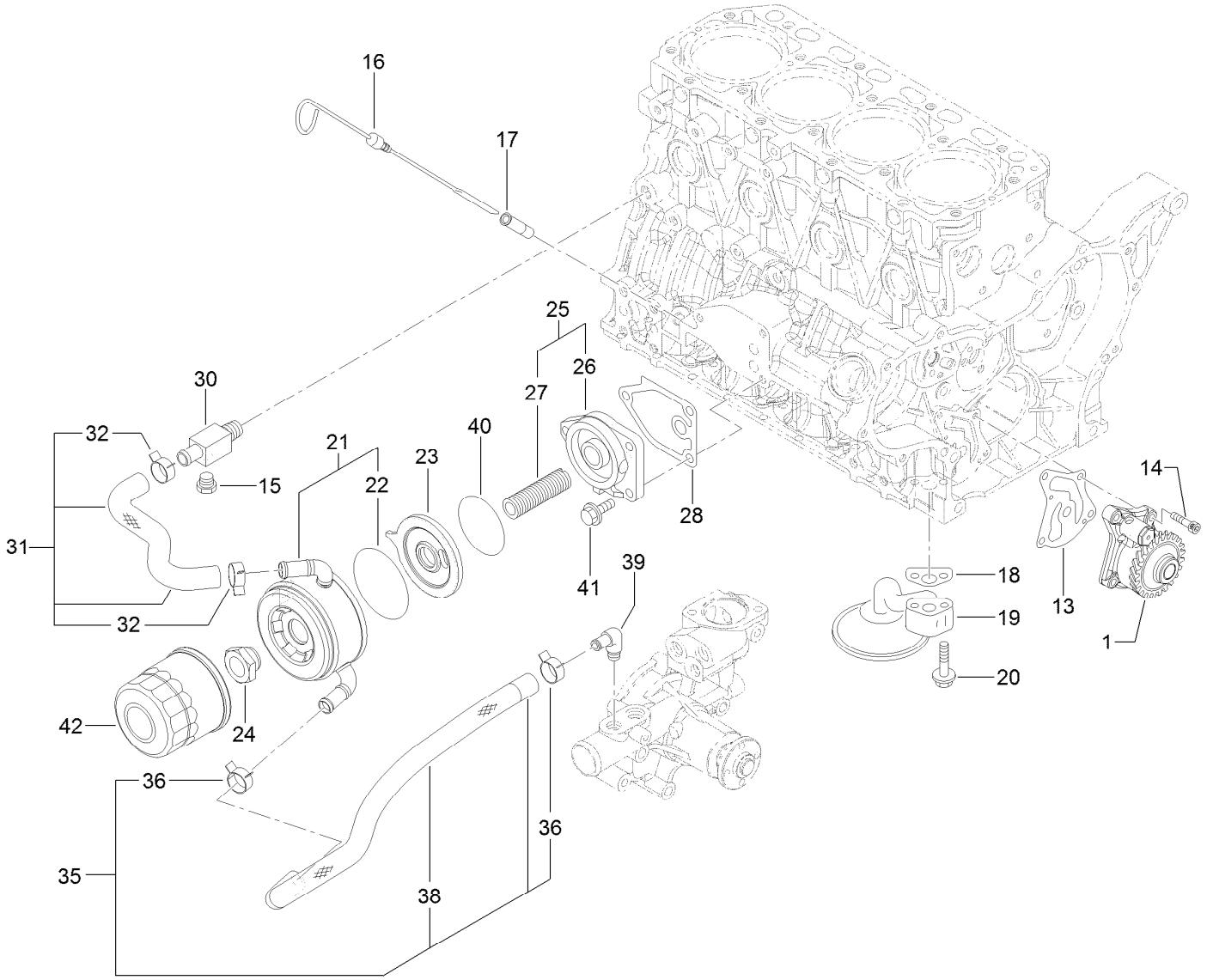

Lubrication and Oil System Assembly

Ref.	Part Number	Qty.	Description
1	127-3101	1	Oil Lube Pump ASM
13	127-3004	1	Gasket
14	125-7232	4	Bolt
15	125-7171	1	Plug
16	125-6987	1	Dipstick
17	125-6954	1	Guide
18	125-7022	1	Gasket
19	125-7023	1	Pipe ASM
20	125-7217	2	Bolt
21	127-3014	1	Cooler ASM
22	127-2985	1	O-Ring
23	127-3015	1	Bracket
24	125-7041	1	Nut-Cooler, Oil
25	127-3009	1	Bracket ASM

Ref.	Part Number	Qty.	Description
26	125-6930	1	Bracket
27	127-3010	1	Stud
28	125-7024	1	Gasket
30	125-6990	1	Joint
31	127-3102	1	Pipe-Cooling, Water
32	125-7162	2	Clip
35	127-3103	1	Hose-Cooling, Water
36	125-7162	2	Clip
38	127-3007	1	Tube
39	125-7001	1	Elbow
40	127-3176	1	O-Ring
41	125-7595	3	Bolt
42	125-7025	1	Filter

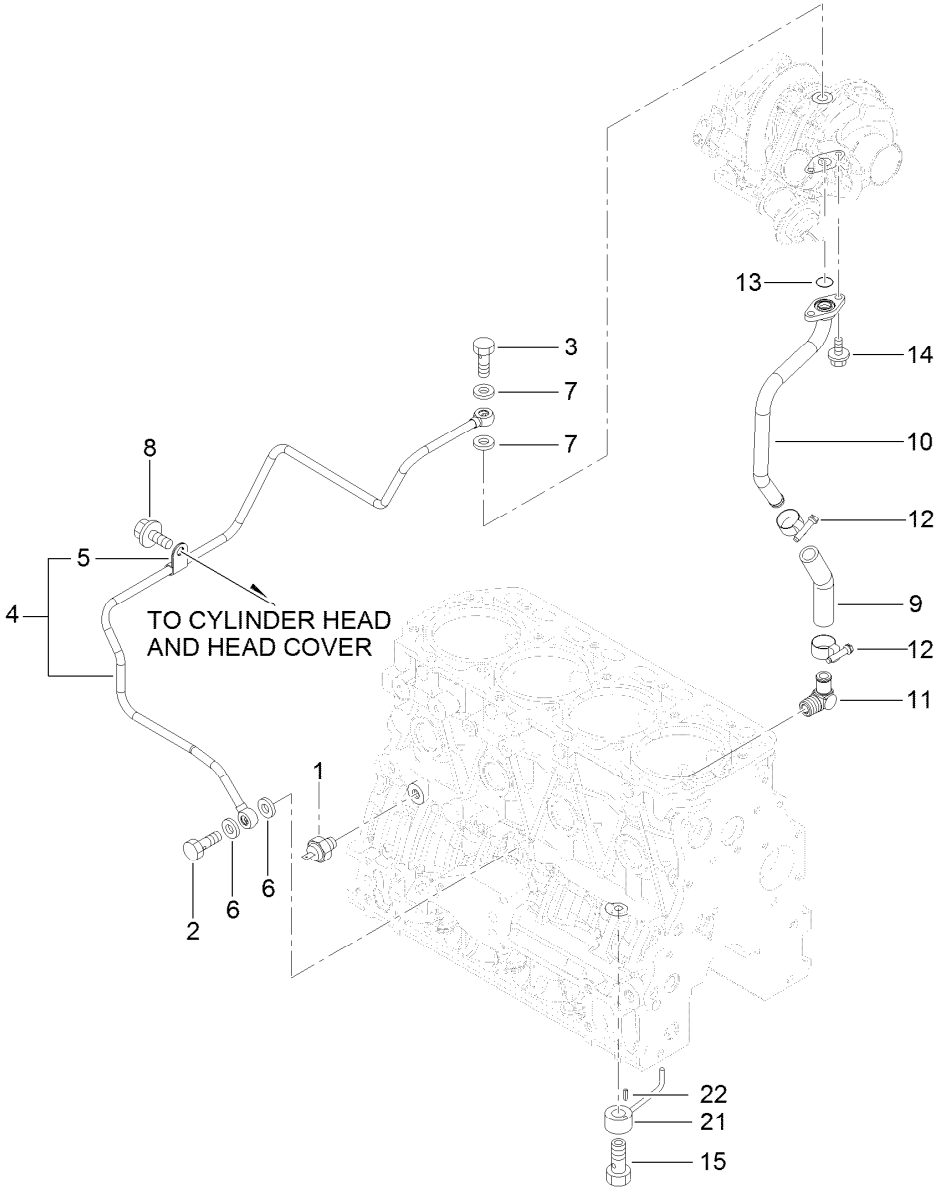

Lubrication Oil Line Assembly

Ref.	Part Number	Qty.	Description
1	125-6918	1	Switch-Oil
2	125-6975	1	Bolt-Joint, Pipe
3	125-6952	1	Bolt-Joint, Pipe
4	127-3154	1	Lube Oil Pipe ASM
5	125-6976	1	Retainer
6	125-7175	2	Washer-Seal
7	125-7193	2	Gasket
8	93-0362	1	Bolt
9	127-2992	1	Joint

Ref.	Part Number	Qty.	Description
10	127-3155	1	Pipe-Lube, Oil
11	127-3003	1	Elbow
12	127-3169	2	Clamp-Hose
13	125-7198	1	O-Ring
14	125-7208	2	Bolt
15	125-7105	4	Check Valve ASM
21	125-7098	4	Nozzle
22	125-7182	4	Pin-Spring

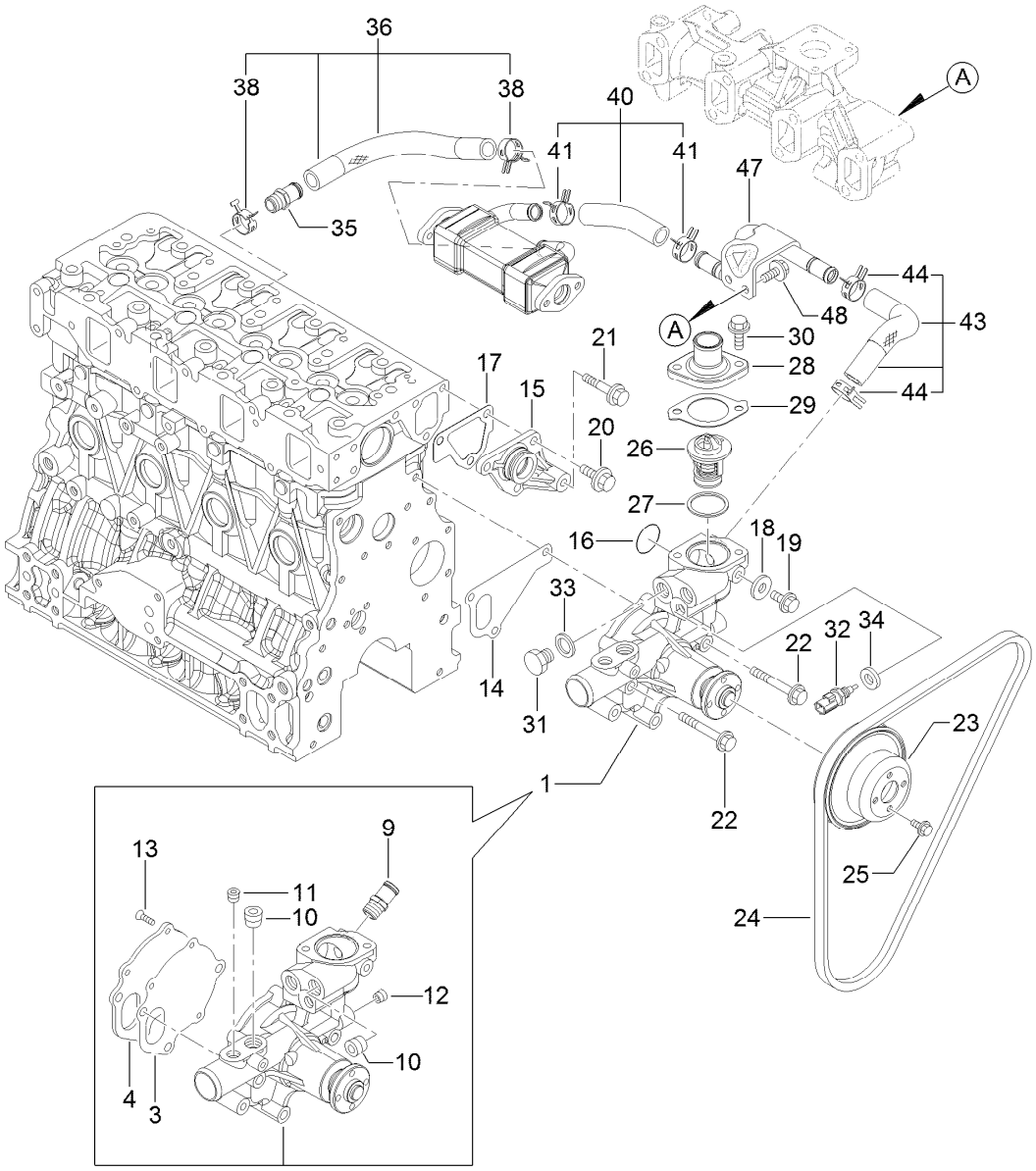

Cooling Water System Assembly

Ref.	Part Number	Qty.	Description
1	127-3071	1	Water Pump ASM
3	125-6998	1	Gasket
4	125-6999	1	Plate
9	127-3017	1	Joint
10	125-7123	2	Plug
11	127-3175	1	Plug
12	125-7195	1	Plug
13	125-7234	3	Screw
14	125-7047	1	Gasket
15	125-6986	1	Joint
16	125-7048	1	O-Ring
17	125-6978	1	Gasket
18	125-7192	1	Gasket
19	93-0362	1	Bolt
20	125-7214	3	Bolt
21	125-7219	1	Bolt
22	125-7222	3	Bolt
23	125-7039	1	V-Pulley
24	127-2998	1	V-Belt

Ref.	Part Number	Qty.	Description
25	125-7206	4	Bolt
26	125-7029	1	Thermostat
27	125-7026	1	Gasket
28	125-7034	1	Cover
29	125-7110	1	Gasket
30	125-7594	2	Bolt
31	125-6953	1	Plug
32	125-7124	1	Sensor
33	125-6979	1	Gasket
34	125-7176	1	Washer-Seal
35	127-3017	1	Joint
36	127-3072	1	Water In Pipe ASM
38	127-3020	2	Clamp-Hose
40	127-3115	1	Water Out Pipe ASM
41	127-3020	2	Clamp-Hose
43	127-3116	1	Pipe ASM-Water,Out
44	127-3020	2	Clamp-Hose
47	127-3117	1	Pipe-Out, CW
48	125-7214	2	Bolt

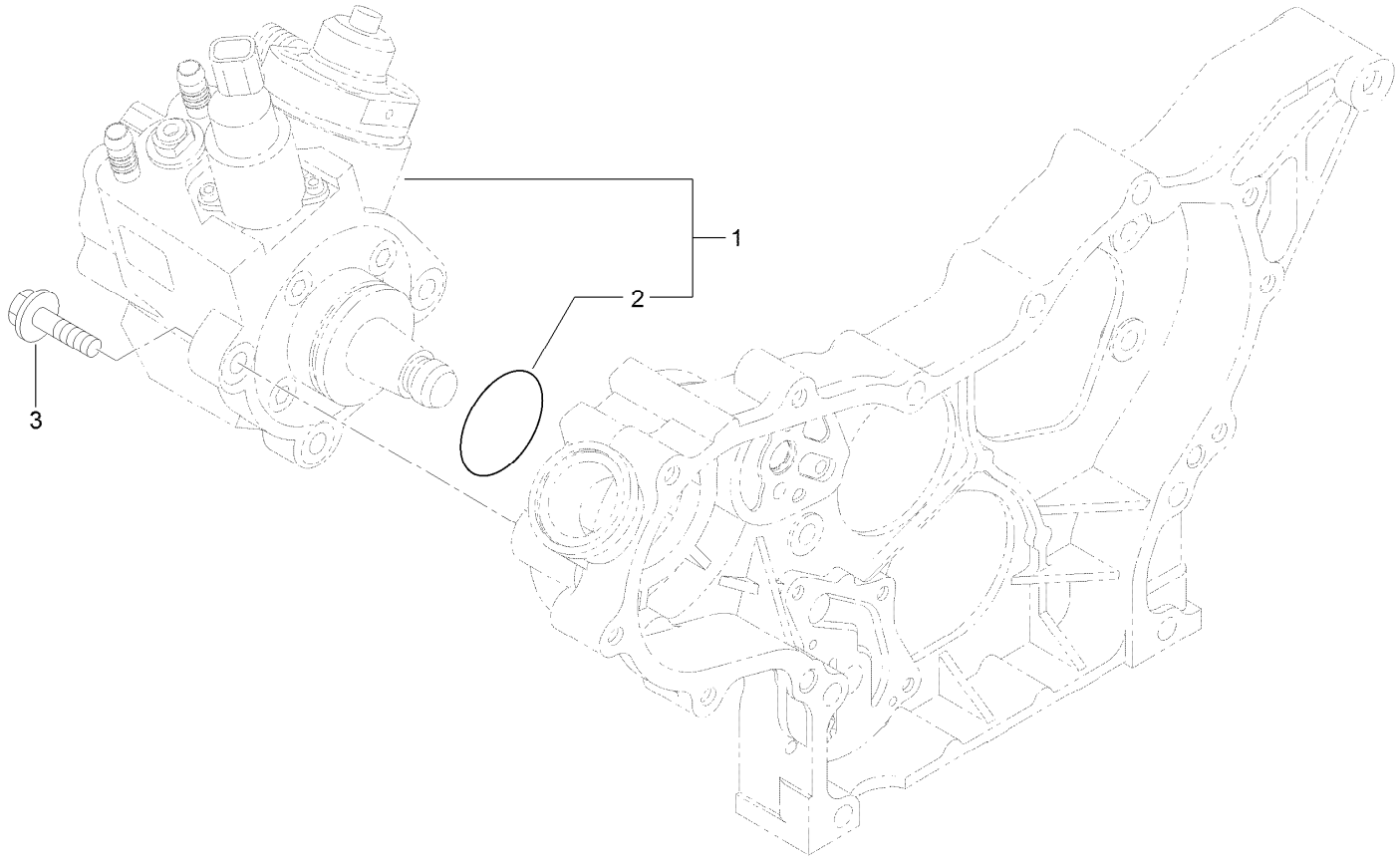

Fuel System Assembly

Ref.	*Part Number*	*Qty.*	*Description*
1	127-3073	1	Fuel Pump ASM
2	127-3074	1	O Ring-Pump, Fuel
3	125-7216	3	Bolt

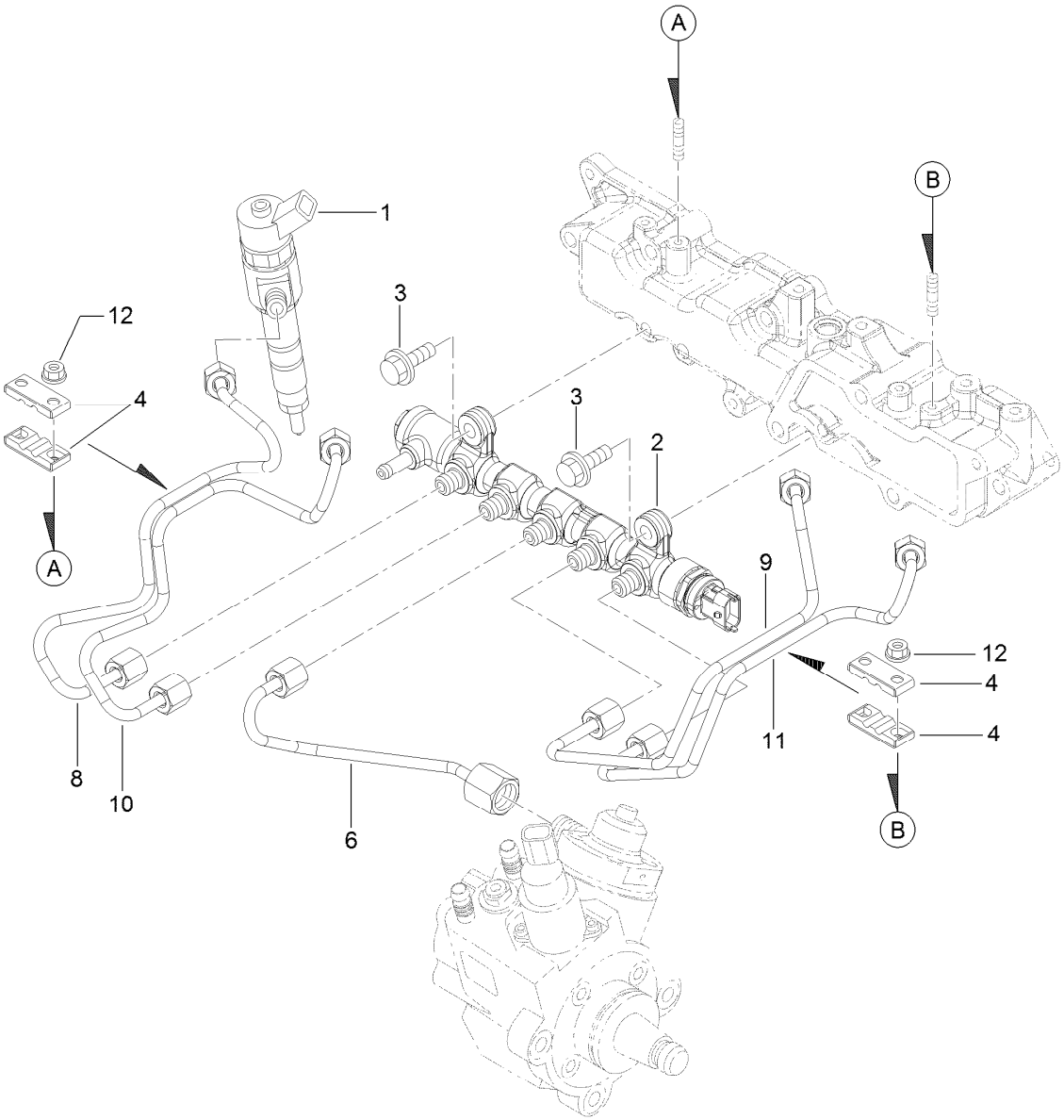

Fuel Injection Valve Assembly

Ref.	*Part Number*	*Qty.*	*Description*
1	127-3104	4	Injector ASM
2	127-3118	1	Rail ASM
3	125-7215	2	Bolt
4	127-2982	4	Retainer
6	127-3082	1	Rail In Pipe ASM
8	127-3121	1	Injection Pipe ASM
9	127-3083	1	Injection Pipe ASM
10	127-3122	1	Injection Pipe ASM
11	127-3084	1	Injection Pipe ASM
12	125-7231	4	Nut

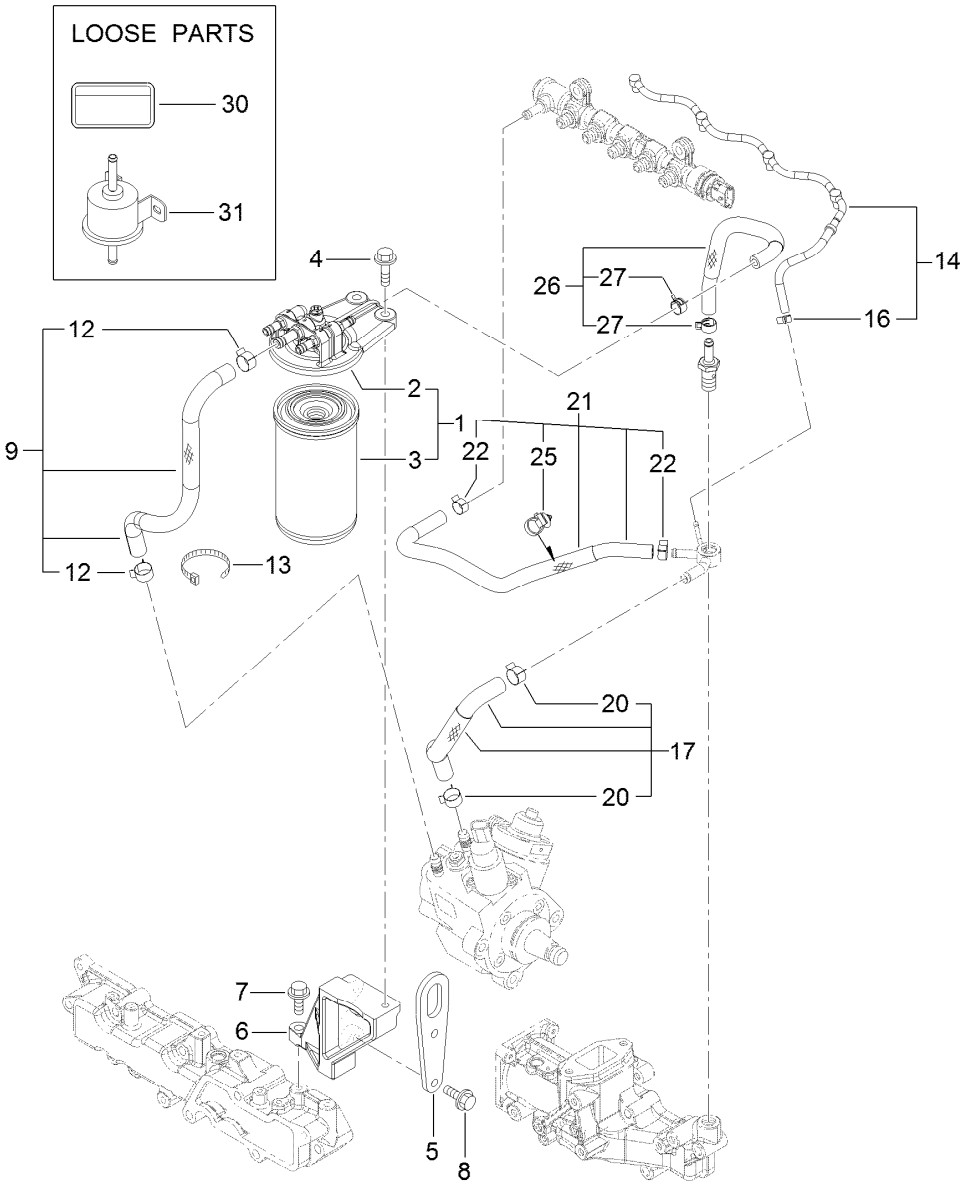

Fuel Line Assembly

Ref.	Part Number	Qty.	Description
1	127-3075	1	Filter ASM
2	127-3076	1	Bracket ASM
3	125-8752	1	Filter-Fuel
4	125-7216	2	Bolt
5	127-3091	1	Lifter-Engine
6	127-3105	1	Stay-Bracket, Filter
7	125-7215	1	Bolt
8	125-7216	2	Bolt
9	127-3077	1	Fuel Pipe ASM
12	125-7191	2	Clamp-Hose
13	127-2981	1	Band

Ref.	Part Number	Qty.	Description
14	127-3120	1	Fuel Pipe ASM
16	127-3172	1	Clamp-Hose
17	127-3078	1	Fuel Pipe ASM
20	125-7191	2	Clamp-Hose
21	127-3119	1	Pipe ASM-Fuel
22	127-2950	2	Clip
25	127-3087	1	Band-Clip
26	127-3079	1	Fuel Pipe ASM
27	127-2950	2	Clip
30	125-6900	1	Label-Caution, Fuel Oil
31	127-3008	1	Pump-Feed, Fuel

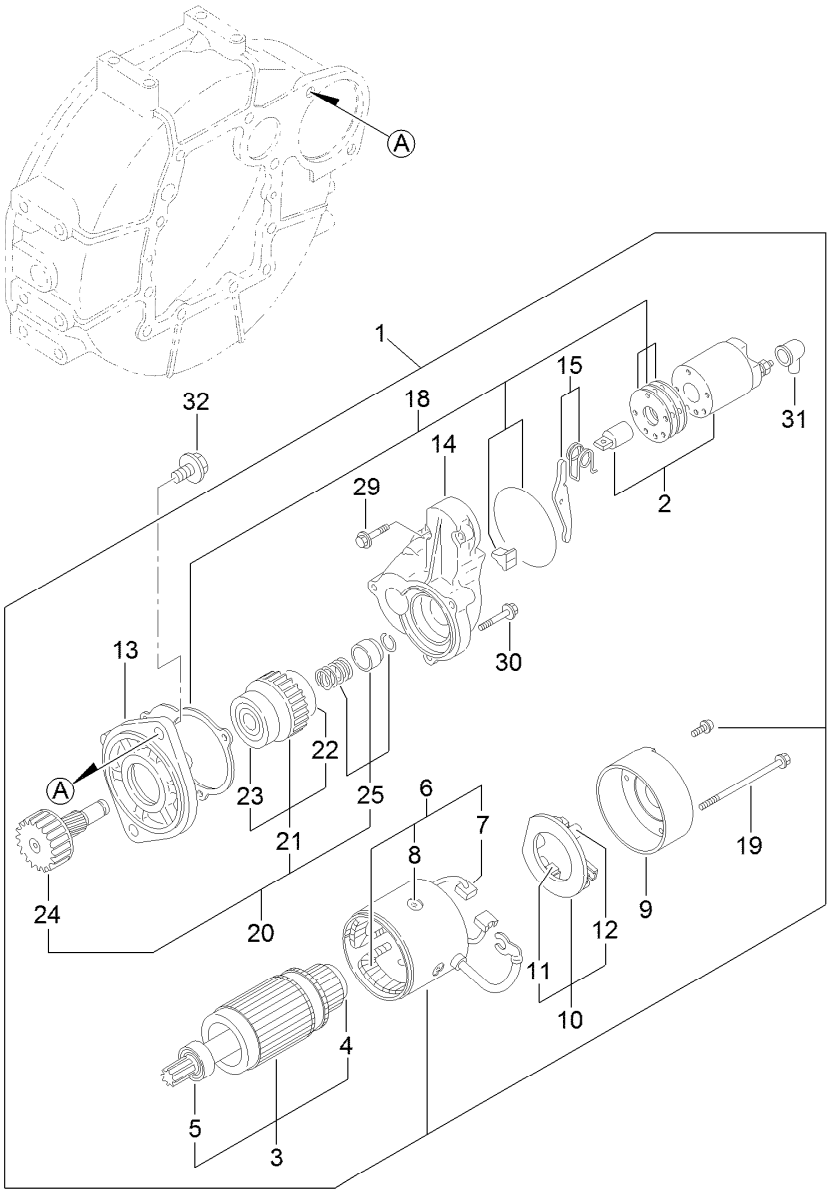

Starting Motor Assembly

Ref.	Part Number	Qty.	Description
1	125-7003	1	Starter
2	125-7004	1	Switch ASM
3	125-7112	1	Armature ASM
4	125-7252	1	Bearing-Ball
5	125-7249	1	Bearing, Ball
6	125-7113	1	Field Coil ASM
7	125-7114	2	Brush
8	125-7163	4	Screw
9	125-7115	1	Cover
10	125-7116	1	Brush Holder ASM
11	125-7114	2	Brush
12	125-7036	4	Spring
13	125-7164	1	Case-Gear
14	125-7005	1	Housing

Ref.	Part Number	Qty.	Description
15	125-7165	1	Lever Set
18	125-7037	1	Dust Cover ASM
19	125-7117	2	Bolt-Through
20	125-7166	1	Pinion ASM
21	125-7250	1	Clutch ASM
22	125-7251	1	Bearing-Ball
23	125-7253	1	Bearing-Ball
24	125-7167	1	Shaft
25	125-7168	1	Stopper Set
29	125-7210	2	Bolt
30	125-7211	3	Bolt
31	125-7169	1	Cover
32	125-7225	2	Bolt

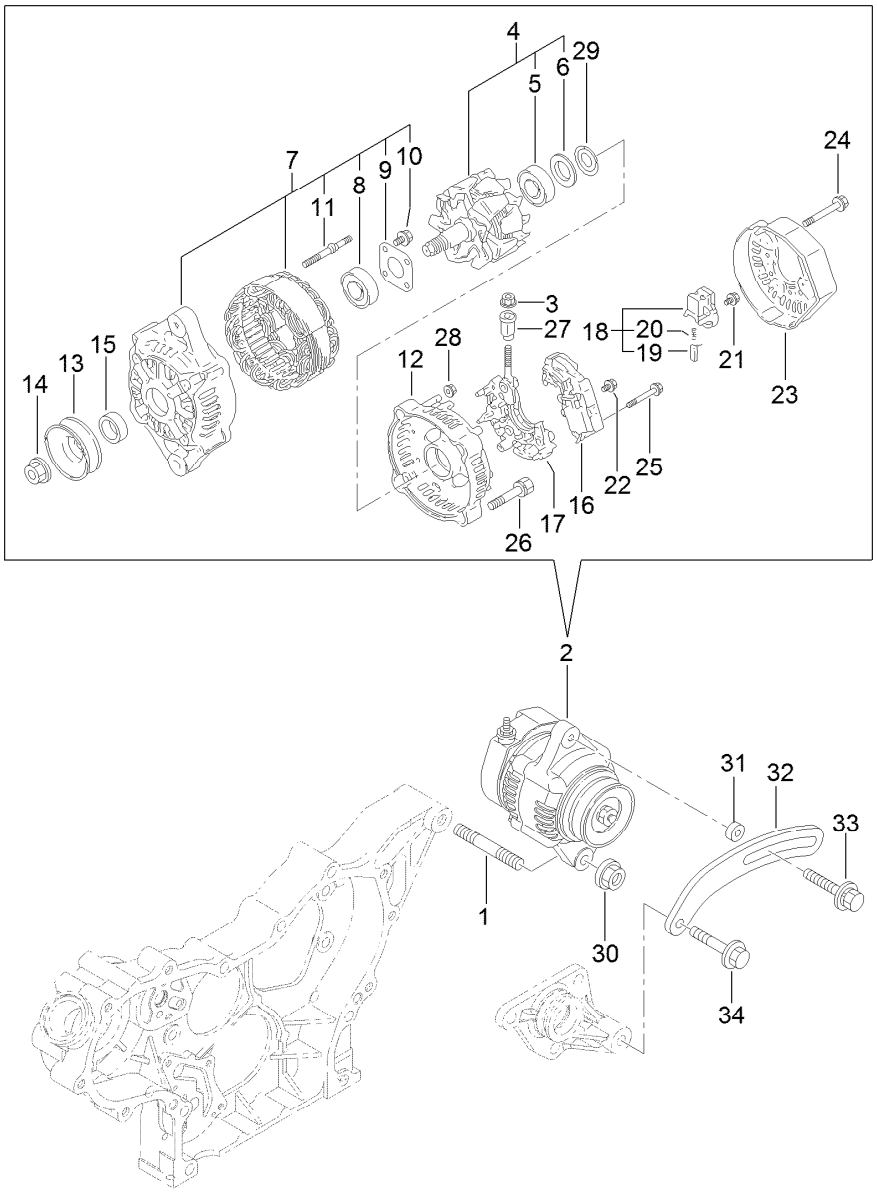

Generator Assembly

Ref.	Part Number	Qty.	Description
1	127-3011	1	Stud
2	127-3001	1	Generator
3	127-3190	1	Nut
4	127-2951	1	Rotor ASM
5	127-2983	1	Bearing-Ball
6	127-2962	1	Cover
7	127-2952	1	Frame ASM
8	127-2958	1	Bearing-Ball
9	127-2959	1	Plate-Retainer
10	127-2960	4	Screw
11	127-2961	2	Stud
12	127-2953	1	Frame ASM
13	127-2954	1	Pulley
14	127-2955	1	Nut
15	127-2957	1	Collar
16	127-3002	1	Regulator ASM
17	127-2963	1	Holder

Ref.	Part Number	Qty.	Description
18	127-2993	1	Holder
19	127-2956	2	Brush ASM
20	127-2964	2	Spring
21	127-2965	6	Screw
22	127-2966	1	Screw
23	127-2999	1	Cover
24	127-2967	3	Bolt
25	127-2968	2	Screw
26	127-2969	2	Bolt
27	127-2970	1	Bushing-Insulation
28	127-2971	2	Nut
29	127-2972	1	Washer
30	125-7230	1	Nut
31	125-6947	1	Spacer
32	127-2977	1	Adjuster
33	125-7134	1	Bolt
34	125-7219	1	Bolt

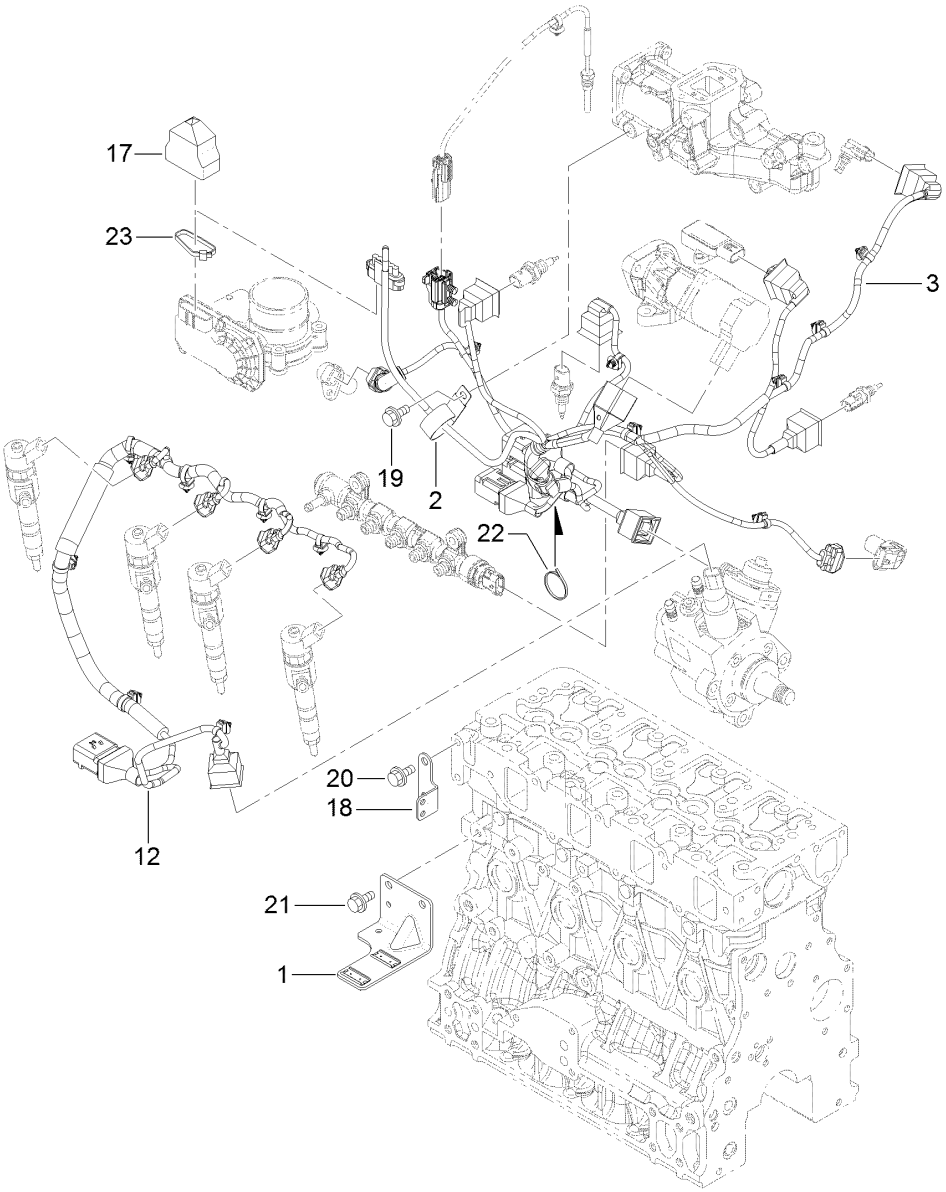

Electric Parts Assembly

Ref.	*Part Number*	*Qty.*	*Description*
1	127-3086	1	Bracket-Connector
2	127-3018	1	Clip
3	127-3156	1	Harness B-E C O, Engine
12	127-3125	1	Harness C-E C O, Engine
17	127-3089	1	Boot-Type, Cap
18	127-3090	1	Bracket-Harness
19	93-0362	1	Bolt
20	93-0362	2	Bolt
21	93-0362	2	Bolt
22	127-3187	1	Band
23	127-3188	1	Band

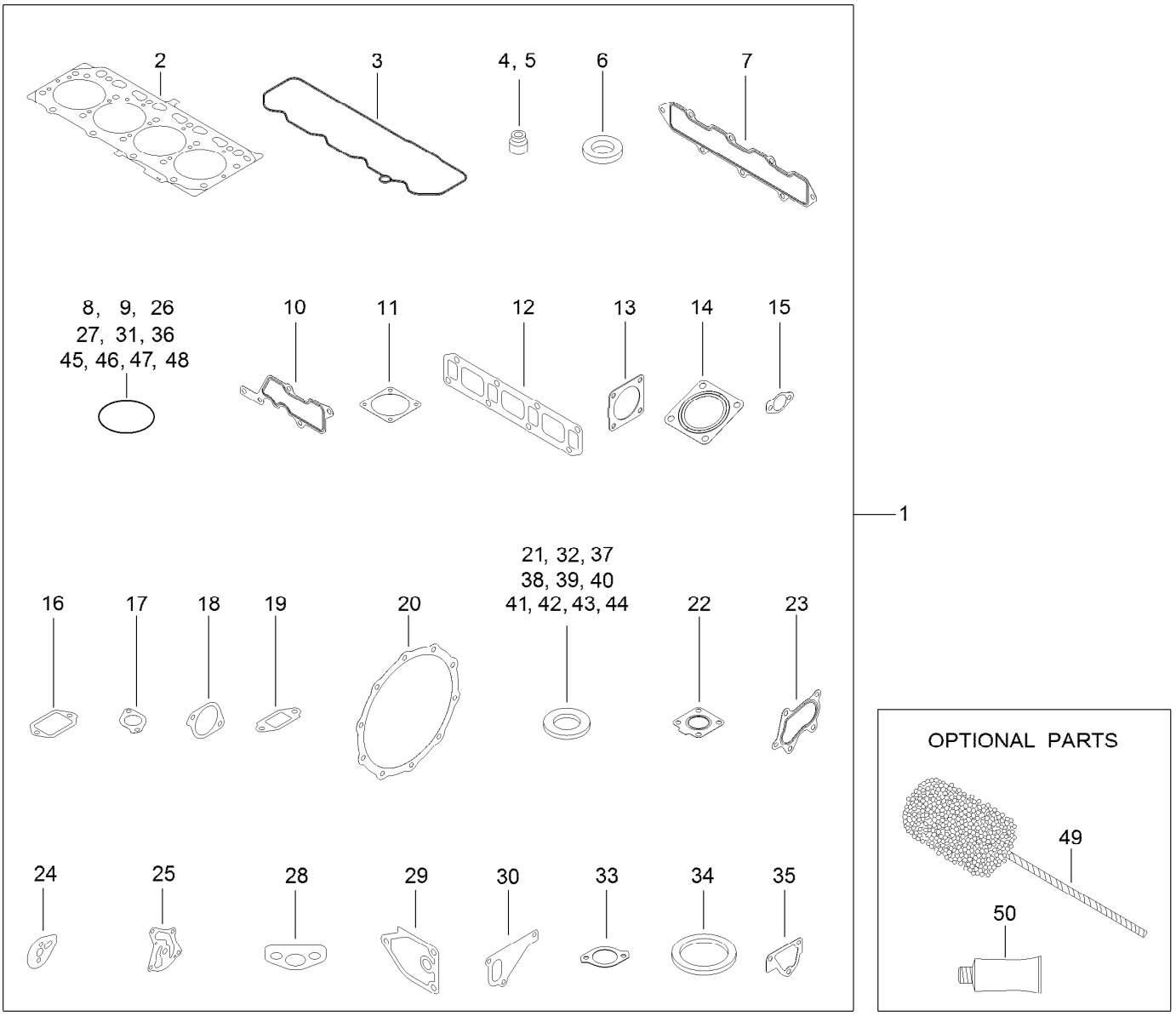

Gasket Set

Ref.	Part Number	Qty.	Description
1	127-3189	1	Gasket Kit
2	127-3126	1	Gasket-Head, Cylinder
3	127-3106	1	Gasket-Cover
4	127-2986	4	Seal-Stem, Valve
5	127-3027	4	Seal-Stem, Valve
6	127-3021	4	Gasket-Injector
7	127-3107	1	Gasket-Manifold, Intake
8	127-3032	2	O-Ring
9	127-3033	1	O-Ring
10	127-3034	1	Gasket-Collector
11	127-3037	2	Gasket-Throttle
12	127-3108	1	Gasket-Manifold, Exhaust
13	127-3019	1	Gasket
14	127-2987	1	Gasket
15	127-3043	2	Gasket-Cooler, E G R
16	127-3046	1	Gasket-E G R
17	127-3016	1	Gasket
18	127-3050	1	Gasket-Intake Valve, E G R
19	127-3051	1	Gasket-Out Valve, E G R
20	127-3162	2	Gasket-D P F
21	127-3056	4	Gasket-Sensor

Ref.	Part Number	Qty.	Description
22	125-7070	1	Gasket
23	125-7071	1	Gasket
24	127-3069	1	Gasket-Idle, Shaft B
25	127-3004	1	Gasket
26	125-6909	2	O-Ring
27	127-2973	1	O-Ring
28	125-7022	1	Gasket
29	125-7024	1	Gasket
30	125-7047	1	Gasket
31	125-7048	1	O-Ring
32	125-6979	1	Gasket
33	125-7110	1	Gasket
34	125-7026	1	Gasket
35	125-6978	1	Gasket
36	127-3074	1	O Ring-Pump, Fuel
37	125-7174	1	Washer-Seal
38	125-7175	2	Washer-Seal
39	125-7176	1	Washer-Seal
40	127-3166	2	Washer-Seal
41	125-7177	1	Washer-Seal
42	125-7192	1	Gasket

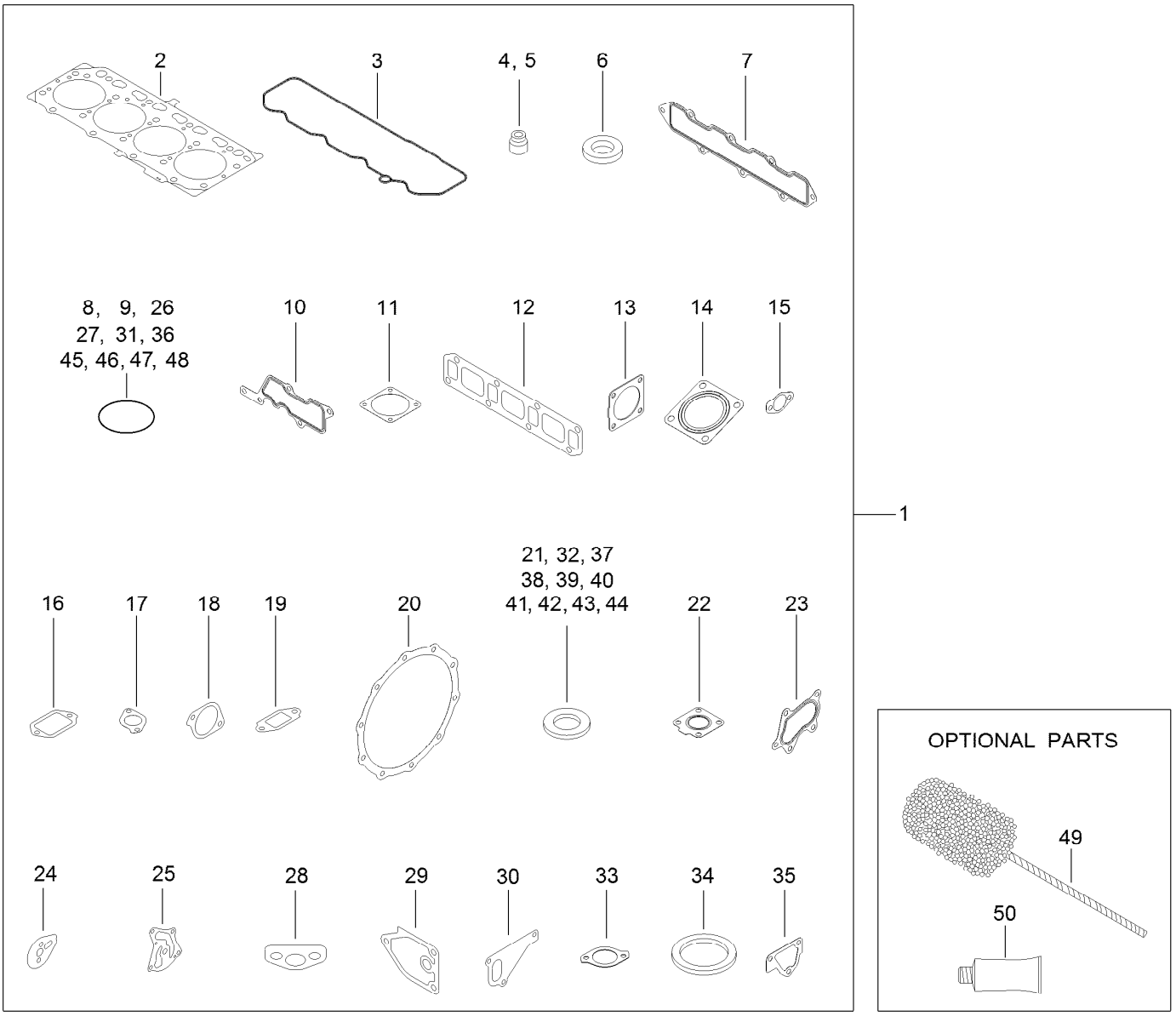

Gasket Set (continued)

Ref.	Part Number	Qty.	Description
43	125-7193	2	Gasket
44	127-3174	2	Gasket
45	93-0418	3	O-Ring
46	125-7197	1	O-Ring

Ref.	Part Number	Qty.	Description
47	125-7198	1	O-Ring
48	127-3176	1	O-Ring
49	127-3000	1	Hone
50	125-7248	1	Gasket-Liquid

Attachments and Accessories

For 03780A Reelmaster 7000-D 4-Wheel Drive Traction Unit

Product Name	Model/Part
27in Verticutter	03184
27in 8-Blade Cutting Unit	03710
27in 11-Blade Cutting Unit	03711
32in 8-Blade Cutting Unit	03712
Premium All Season Hydraulic Fluid (55 Gallon Drum)	108-1177
Premium All Season Hydraulic Fluid (5 Gallon Pail)	108-1178
Premium All Purpose Grease (Tube)	108-1190
Gauge Bar Assembly	108-6715
Operator Fan Kit - US Sales Only, 3in ROPS Post	110-8804
Premium Synthetic Bio-Degradable Hydraulic Fluid (5 Gallon Pail)	119-2157
Premium Synthetic Bio-Degradable Hydraulic Fluid (55 Gallon Drum)	119-2158
Brush and Handle Kit	29-9100
Hardtop Sunshade	30359
400 Hour Mvp Kit	30408
Flow Divider Kit	30876

TORO®

Count on it.