FORM NO. 3311-201

TORO®

14" MODEL NO. 38100 – 9000001 & UP
14" MODEL NO. 38210 – 9000001 & UP

OPERATOR'S MANUAL

TORO S140 SNOWTHROWER

SAFETY INSTRUCTIONS



This safety alert symbol means CAUTION – PERSONAL SAFETY INSTRUCTION. Read the instruction because it has to do with safety. Failure to comply with the instruction may result in personal injury.

The snowthrower is designed and tested to offer reasonably safe service, provided it is operated in strict accordance with the following Safety Instructions. Failure to comply with the following instructions MAY RESULT IN PERSONAL INJURY.

ONLY COPY
DO NOT REMOVE
Tech. Publications

BEFORE OPERATING

1. Never allow children to operate the snowthrower. Adults should operate the snowthrower only after READING THIS MANUAL and receiving proper instructions.

2. Familiarize yourself with the controls. Know how to stop the engine and disengage controls quickly.

3. Keep everyone, especially children and pets, away from the area of operation.

4. Wear adequate winter clothing and footwear that will improve footing on slippery surfaces.

5. Since fuel is highly flammable, handle it with care. Fill fuel tank with mixture of gasoline and oil before trying to start the engine.

   A. Use an approved fuel container for storing the gasoline/oil mixture.
   B. Fill fuel tank outdoors, not indoors. Fuel tank must not be filled when engine is running or when engine is hot.
   C. Install gasoline container cap and fuel tank cap, and wipe up any spilled gasoline before starting the engine.

6. Thoroughly inspect the area where snowthrower will be used. Remove all door mats, sleds, boards, wires, and any other foreign objects.

7. Keep all shields and safety devices in place. If a shield or safety device is defective, make all repairs before operating snowthrower. Also tighten loose nuts, bolts, and screws.

8. Start engine and let it warm up outdoors for about two minutes to adjust to outdoor temperature before clearing snow.

WHILE OPERATING

9. Never operate snowthrower without good visibility or light. Always maintain secure footing and keep a firm grip on the handle when clearing snow: walk never run. Do not use snowthrower on a roof.

10. Do not run engine indoors.

11. Keep face, hands, feet, and any other part of your body or clothing away from concealed, moving, or rotating parts. Stay behind the handle while operating the snowthrower. STAY CLEAR OF DISCHARGE OPENING AT ALL TIMES.

12. Do not attempt to make adjustments while engine is running.

13. Use extreme caution when clearing snow from a walk, road or a gravel drive. Push down on handle to raise skid and impeller blades so rocks are not picked up and thrown. Stay alert for hidden hazards and traffic on roads.

14. Never direct discharge or operate snowthrower near bystanders, glass enclosures, automobiles and trucks, window wells, or a drop-off without proper adjustment of the snow discharge angle. Keep children and pets away.

15. Never direct snow discharge at bystanders, and do not allow anyone in front of the snowthrower.

16. Never clear snow from steep slopes. Exercise extreme caution when changing direction on slopes.

17. Do not overload the snowthrower by clearing snow at too fast a rate.

18. If a solid object is hit or if the snowthrower vibrates abnormally, turn key to OFF so engine stops. Next, remove high tension wire from spark plug; then check snowthrower for possible damage, an obstruction, or loose parts. Repair damage before starting and operating the snowthrower.

SAFETY INSTRUCTIONS

19. Before leaving the operator's position – behind handle – shut engine off and wait for all moving parts to stop. Remove key from switch if snowthrower will be left unattended.

20. Before adjusting, cleaning, repairing and inspecting the snowthrower, and before unclogging the discharge guide, shut engine off and wait for all moving parts to stop. Next, remove high tension wire from spark plug, and keep wire away from the plug to prevent accidental starting.

21. Let engine run for a few minutes after clearing snow so moving parts do not freeze.

MAINTENANCE AND STORAGE

22. When storing the snowthrower, REMOVE KEY FROM SWITCH. Store key in a memorable place.

23. Never leave fuel in the snowthrower fuel tank when snowthrower is stored in a building where there is flame or spark present. Allow engine to cool before storing. Never store snowthrower in the house or basement.

24. Before performing any maintenance or servicing the snowthrower, turn key to OFF and wait for engine and all moving parts to stop. Remove key from switch and high tension wire from spark plug.

25. Reinstall fuel cap when top cover is removed for maintenance procedures. Perform maintenance and use storage instructions described in this manual.

26. Keep all nuts, bolts, and screws tight to assure snowthrower is in safe working condition. Be sure to check the impeller and engine mounting bolts.

27. ALWAYS USE TORO REPLACEMENT PARTS AND ACCESSORIES TO ASSURE SAFETY AND OPTIMUM PERFORMANCE. NEVER USE "WILL-FIT" REPLACEMENT PARTS AND ACCESSORIES.



SAFETY DECALS

Safety and instruction decals are located on the impeller housing and just beneath the control panel. Replace any decal that is damaged.

⚠ WARNING

- DO NOT DIRECT DISCHARGE AT BYSTANDERS OR WINDOWS.
- KEEP HANDS OUT OF DISCHARGE GUIDE AND KEEP CLEAR OF IMPELLER WHILE ENGINE IS RUNNING.
- STOP ENGINE AND WAIT FOR ALL MOVEMENT TO STOP BEFORE SERVICING MACHINE.
- READ OPERATOR'S MANUAL FOR COMPLETE SAFETY AND OPERATING INSTRUCTIONS. OPERATOR'S MANUALS ARE AVAILABLE FROM THE TORO COMPANY, MINNEAPOLIS, MINN., 55420. SPECIFY MODEL AND SERIAL NUMBERS.

COLD START TURN KEY TO "ON." PULL CHOKE. PUSH PRIMER 1 TO 4 TIMES, DEPENDING ON TEMPERATURE. PULL STARTER HANDLE. WHEN ENGINE STARTS, PUSH CHOKE IN.

HOT START DO NOT PRIME.

FUEL MIX USE CLEAN CONTAINER. MIX ¼ PINT (4 oz.) TWO-CYCLE OIL PER GALLON (32:1 RATIO) OF GASOLINE. DO NOT MIX OIL AND GAS IN GAS TANK.

TO STOP TURN KEY TO "OFF."

COPYRIGHT © ALL RIGHTS RESERVED
The Toro Company – 1978
MINNEAPOLIS, MN 55420 – U.S.A.

FOREWORD

TO THE TORO OWNER . . .

Toro knows how important proper snow throwing equipment is for winter maintenance, and Toro designers have, over the years, strived for and achieved the finest in snow throwing products. You, as a Toro owner, share the most advanced methods and machines available today. Give it the proper care, and it will repay you with precision service.

The more you know about the operation and mechanics of your Toro S140 the better job it will do for you. That's why it is important to read your Operator's Manual from cover to cover before attempting to operate the machine.

Compare the illustrations to your S140 so as to familiarize yourself with locations of controls, lubrication points, and adjustment sites.

Study the safety precautions thoroughly to insure proper functioning and to prevent injury to yourself and others.

At times minor changes are made in Toro products to improve their efficiency. Should you notice a variation in your S140 that is not reflected in the Operator's Manual, see your Toro distributor or his authorized Toro Service Dealer (see Yellow Pages) for information and parts numbers.

TABLE OF CONTENTS

	Page
Loose Parts Chart	3
General Assembly Instructions	4
Preparation Before Starting	4
Gas and Oil (Filling) (Mixture)	4
Know Your Controls	5
Operating Instructions	5
Starting	5
Stopping	5
Adjusting Vanes	5
Operating Tips	5
Maintenance	6-7
Lubrication	6
Chain Tension Adjustment	6-7
Skid Adjustment	7
Spark Plug	7
Carburetor Adjustment	7
Preparing Snowthrower For Storage	8
Maintenance Record	8-11
Identification and Ordering	12
The Toro Promise	12

LOOSE PARTS

Note: Using care, remove snowthrower and other parts from carton. Use chart below to assure all parts have been shipped.

Description	Quantity	Where Used
Upper Handle Assembly	1	
Vane Adjusting Rod Assembly	1	
Special Washer - ¼		Vane Control Bracket
Machine Screw ¼-20 x 1½	4	Mount Upper Handle
Capnut ¼	1	Vane Control Bracket
Key	2	Ignition Switch
Operator's Manual	1	

GENERAL ASSEMBLY INSTRUCTIONS

1. Insert upper handle in handle bracket, align holes and insert four (4) machine screws to secure handle.

2. Install vane control as shown. Use a special washer on each side of handle and secure eyebolt with capnut.

3. Check all accessible bolts and nuts for tightness.

4. Manually turn the impeller blades and check for a 1/16 inch clearance between the edge of each blade and the leading edge of the skid (see skid adjustment, page 7).

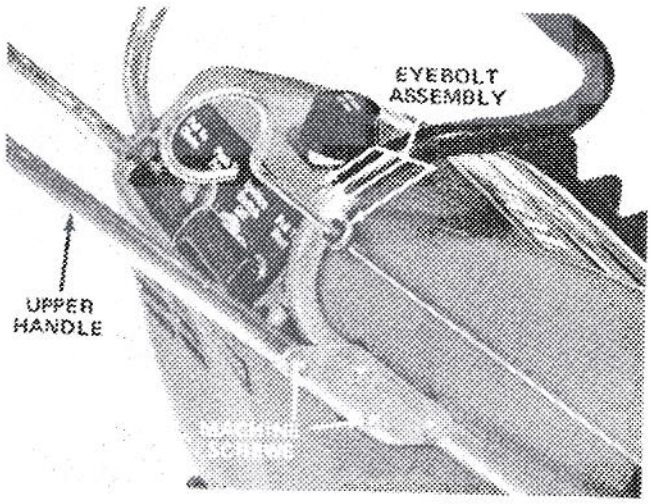

PREPARATION BEFORE STARTING

CAUTION

Gasoline is flammable and caution must be used when handling or storing it. Do not fill fuel tank while snowthrower is running, hot, or when snowthrower is in an enclosed area. Keep away from open flame, electrical spark, and DO NOT SMOKE while mixing fuel or filling the fuel tank. Fill fuel tank to within ¼ - ½ inch from the top of the tank to provide space for expansion of fuel. Never fill fuel tank to top of filler neck. Always fill fuel tank outdoors and use a funnel or spout to prevent spilling. Make sure to wipe up any spilled fuel before starting the engine.

Store gasoline in a clean, approved container, and keep the cap in place on the container. Keep gasoline in a cool, well ventilated place: never in the house. Never buy more than a 30 day supply of gasoline to assure volatility. Gasoline is intended to be used as a fuel for internal combustion engines; therefore, do not use gasoline for any other purpose. Since many children like the smell of gasoline, keep it out of their reach because the fumes are dangerous to inhale, as well as being explosive.

MIX GASOLINE AND OIL

The two cycle engine used in the S140 requires a mixture of GASOLINE and OIL for lubrication of bearings and other moving parts. The correct fuel mixture ratio is 32:1. Gasoline and oil must be premixed in a clean gasoline container, not in the snowthrower fuel tank. Always use fresh gasoline. To mix gasoline and oil, do the following:

First, add 1 U.S. quart of leaded REGULAR gasoline to a gallon gasoline container. Second, pour ½ cup – 4 oz – of SAE 30 two cycle engine oil into the gasoline container. Oil mixes best when it is at room temperature (+70° F). DO NOT use multi-viscosity oils, such as 10W-30 or 10W-40. Third, shake gasoline container vigorously so oil mixes with gasoline. Remember to install cap on gasoline container before shaking. Fourth, add an additional 3 U.S. quarts of gasoline to the gallon container. Now the special gasoline and oil mixture can be added to the snowthrower fuel tank.

IMPORTANT: Do not fill fuel tank with gasoline that does not have oil mixed in it. Do not use gasoline additives because the engine could be damaged.

KNOW YOUR CONTROLS

Your S140 is designed to operate at a constant engine speed and therefore is not provided with a throttle control. Adjustment of the carburetor may be required occasionally to obtain efficient engine operation (see carburetor adjustment, page 7).

No clutch lever is required on the S140 since the engine is chain-coupled directly to the impeller blades which turn continuously when the engine is running. It is important to maintain proper chain tension (see chain tension adjustment, page 6 & 7).

The primer, choke, ignition switch and recoil starter are used to start the engine, the vane control regulates directional discharge of snow, and rotating ignition key to OFF stops the engine.

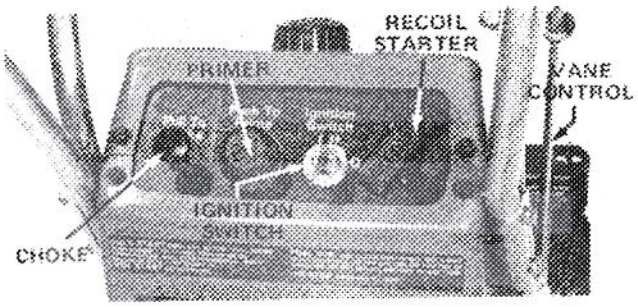

OPERATING INSTRUCTIONS

STARTING

1. Make sure impeller blades are unobstructed and free to turn.

2. Pull choke knob out, rotate ignition key to ON. Put thumb on center of primer so hole is covered — sealed.

Depending upon temperature at which the machine is stored, push the primer one to four times. For temperature above +20° F, use one or two primes; below +20° F, use three or four primes; for extremely cold temperatures, below -10° F, use five to six primes.

3. Pull starter rope with quick steady strokes to start.

4. When engine starts, push choke rod in. If engine fails to start after four (4) or five (5) pulls, prime engine again as described and pull starter handle. Repeat procedure until engine starts.

5. Starting a warm engine will seldom require priming. Pull the choke rod out and start as described above.

STOPPING

To stop the engine (stand in normal operator position) and rotate ignition key to OFF. Remove key and keep in memorable place at finish of operation.

ADJUSTING VANES

Adjust the vanes to control the direction the snow is thrown as follows:

1. Turn vane control for desired direction of throw.

2. It is good practice to set the vanes in the vertical position when the S140 is not in use.

OPERATING TIPS

1. The S140 will pull itself forward when tilted forward so that impeller blades contact the ground.

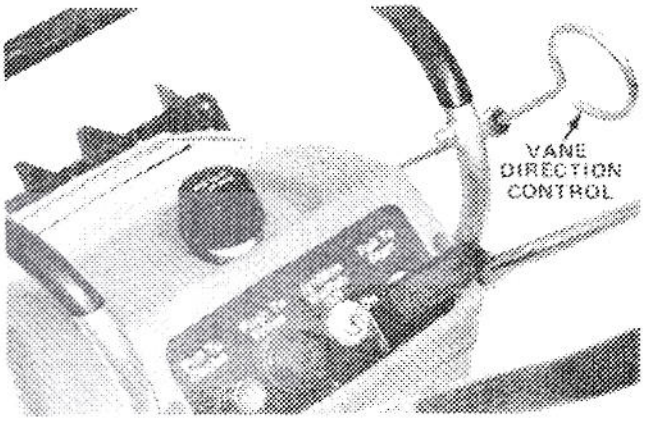

2. For most efficient snow throwing, keep vanes parallel, throw snow downwind and slightly overlap each swath.

3. It is good practice to keep the area to be plowed free of stones, toys and other foreign objects. Such items might be covered by the first snow fall and picked up by the impeller blades while plowing.

4. Use only the fuel-oil mixture specified under FUEL MIXTURE in this manual.

5. Keep the skids and drive chain properly adjusted (see skid adjustment, page 7, and chain tension adjustment, pages 6 & 7).

6. When plowing on gravel or crushed rock driveways, push down on handle to raise front of snowthrower.

7. When clearing steps and deep drifts, hold the unit by the upper and lower handles and use a swinging or sweeping motion.

8. The allowable forward speed of the S140 is dependent on the depth and weight of the snow. Experience will establish the most effective method of using the plow under different conditions.

9. If operating unit at temperature of 40° F. or higher for any extended length of time, remove upper shroud to avoid excessive heat build-up from engine.

MAINTENANCE

LUBRICATION

Your S140 is shipped from the factory properly lubricated for normal plowing conditions. No lubrication should be required during initial use of the machine except for the oil that must be mixed with gasoline.

All the bearings used in the S140 are prelubricated for life at the factory and require no additional lubrication.

A few drops of light machine oil placed on the drive chain once a year will adequately lubricate the chain and sprockets.

CHAIN TENSION ADJUSTMENT

If chain tension is too loose, the chain will drag on the housing, causing excessive noise and wear. If the chain is too tight, the drive assembly may bind, damage or break parts. When properly adjusted, the chain should be snug with no more than 1/8 inch deflection or slack. If an adjustment is necessary, proceed as follows:

1. Remove chain guard from left-hand side of unit by removing two (2) self-tapping screws.

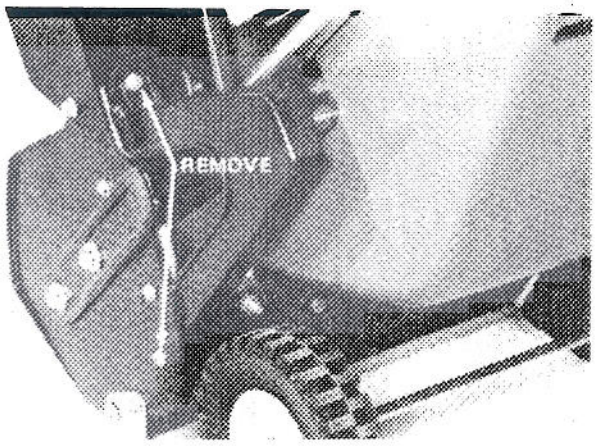

2. Remove upper and lower shrouds by removing fuel cap and mounting screws on front panel. Lift covers off and reinstall fuel cap. Disconnect spark plug lead wire.

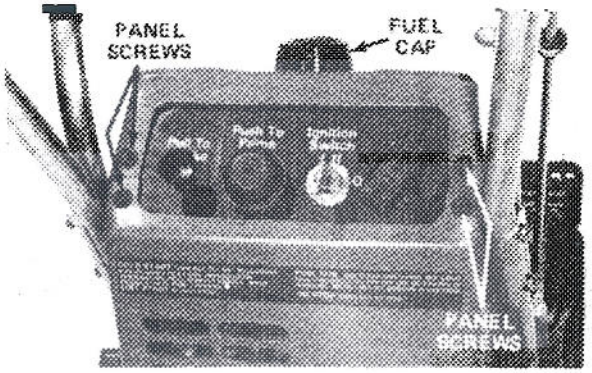

3. Loosen four (4) engine mounting nuts on the left-hand side of engine.

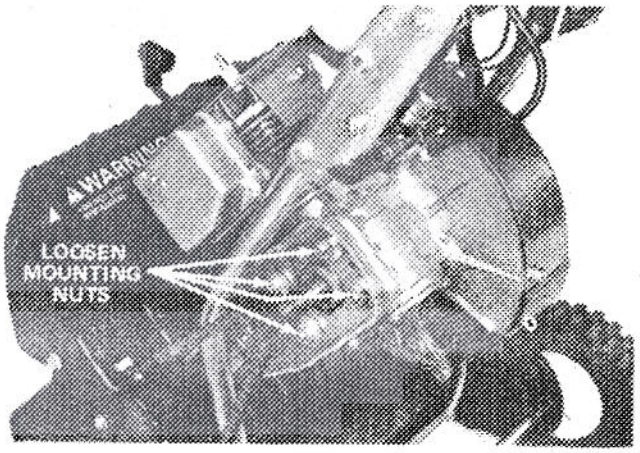

4. Loosen one (1) bolt on right-hand side of unit.

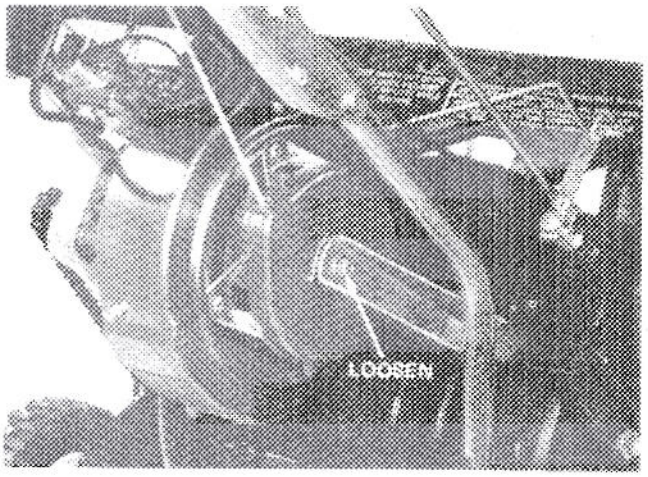

5. Pull engine back until chain is snug. Hand-tighten four mounting nuts to hold engine in place and to maintain proper chain tension. Then tighten the nuts to 170-220 in./lbs using tightening sequence shown in illustration below. Tighten bolt on right side of engine.

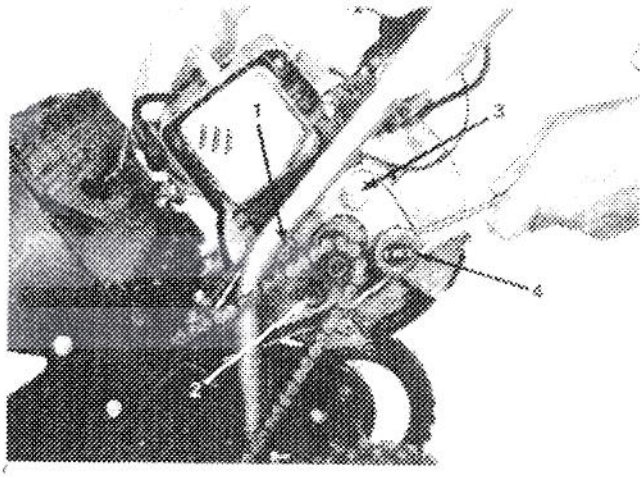

MAINTENANCE

IMPORTANT: It is absolutely necessary that the tightening sequence outlined above be used or the crankshaft will break. Do not over tighten the four nuts because the engine casting will break. Never attempt to install the chain on the engine sprocket by rolling chain onto the sprocket when engine is mounted firmly in place.

6. Replace lower shroud, chain guard, spark plug lead wire and upper shroud, making sure self tapping screws are secure. Insure front panel is snapped into grooves in upper and lower shrouds before tightening screws.

SKID ADJUSTMENT

Check for clearance of approximately 1/16" to 1/8" between the edges of both impeller blades and forward edge of skid. To adjust, proceed as follows:

1. Loosen front skid adjusting nut on both sides of unit.

2. Adjust skid to proper position and fasten skid adjusting nut securely.

3. Repeat adjustment on opposite side of unit.

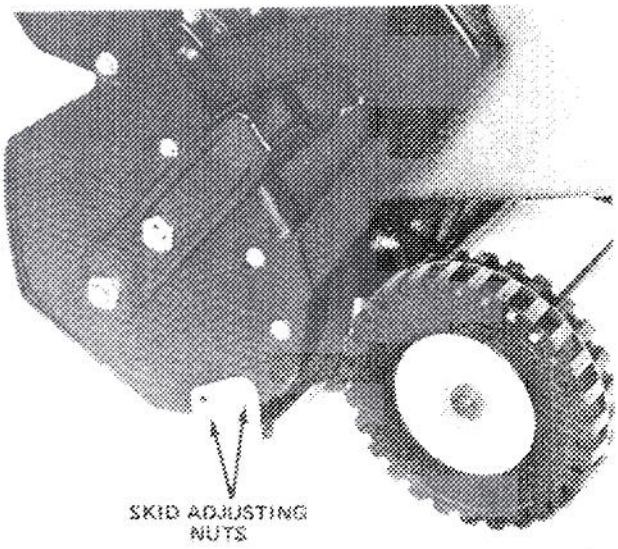

Note: Adjust both sides equally. A parallel between impeller blade and ground should be maintained.

REPLACING SPARK PLUG

Use a Champion RJ18Y, or equivalent, for replacement. Check and reset the gap at .035 inch every 25 hours of operation. Apply light coating of graphite grease on threads before replacing plug. If condition of plug is doubtful, install a new plug.

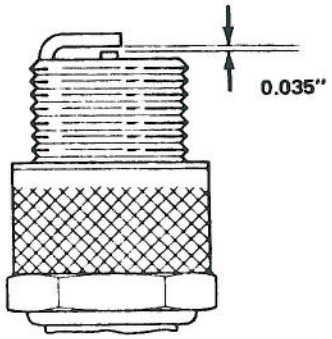

CARBURETOR ADJUSTMENT

The engine carburetor has been tested and adjusted at the factory but may require occasional adjustments to obtain maximum performance. Proper carburetor adjustments are as follows:

A. POWER ADJUSTING SCREW – NORMAL setting is 7/8 of a turn open from closed position.

B. LOW SPEED ADJUSTING SCREW – NORMAL setting is 1 turn open from closed position.

IMPORTANT: Do not close power or low speed adjusting screws too tight or the screw and seat will likely be damaged.

C. IDLE SPEED REGULATING SCREW – Adjust to 3000-3400 R.P.M. by manually holding throttle in closed position. Turning screw clockwise increases speed.

To decrease the fuel supply, turn the "Power Adjustment Screw" in a clockwise direction. To increase the fuel supply, turn the "Power Adjustment Screw" in a counterclockwise direction. Never adjust low or high speed mixture screws more than 1/8 turn at a time before checking engine operation.

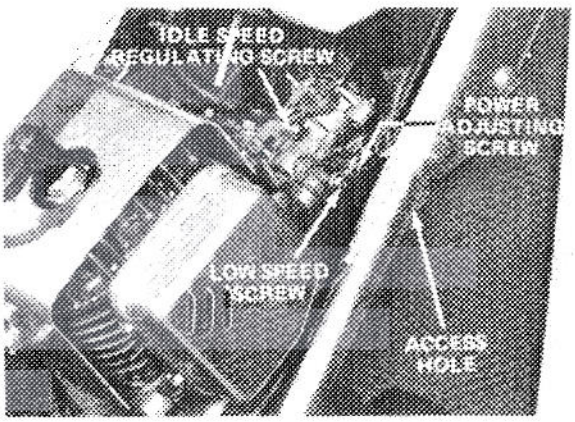

MAINTENANCE

PREPARING SNOWTHROWER FOR STORAGE

CAUTION

Because gasoline/oil mixture in snowthrower fuel tank is explosive, the fuel mixture must be drained outdoors, away from fire or flame. Do not smoke while draining gasoline. If fuel mixture explodes, personal injury may result.

1. Remove cap from snowthrower fuel tank and tip snowthrower upside down so fuel drains into a container. After fuel is drained, install cap on fuel tank. Wipe up any fuel that may have spilled.

2. Start the engine and let engine run until it stops because there is no fuel. When engine sputters, pull choke out so fuel in carburetor is expended.

Note: After fuel is drained from fuel tank, there may not be enough fuel in the fuel system to start the engine. Nevertheless, fuel must be expended to prevent gum-like varnish deposits from forming in carburetor, fuel line, and fuel tank. Such deposits, if allowed to form, will cause starting problems next snow season. Therefore, if engine will not start, pull recoil starter handle 5 - 10 times to expend all fuel in the system.

3. Remove spark plug from cylinder head: refer to Replacing Spark Plug, page 7. Next, pour two teaspoons of engine oil into the spark plug hole in the cylnder head. Pull recoil starter slowly to distribute oil on inside of cylinder. Reinstall spark plug in cylinder head and tighten it to 15 ft-lb.

4. Clean impeller, impeller housing, and exterior of snowthrower.

5. Remove chain guard and oil chain and sprockets with a few drops of light machine oil. Wipe up excess and replace guard.

6. Tighten all screws and nuts. If any part is damaged, repair or replace it.

7. Store snowthrower in a clean, dry place, and cover it to give protection. Never store snowthrower in the house or basement.

MAINTENANCE RECORD

Date	Hours Used	Check Scraper	Check Belt	Check Spark Plug	Preparing For Storage	Comments

MAINTENANCE RECORD

Date	Hours Used	Check Scraper	Check Belt	Check Spark Plug	Preparing For Storage	Comments

MAINTENANCE RECORD

Date	Hours Used	Check Scraper	Check Belt	Check Spark Plug	Preparing For Storage	Comments

MAINTENANCE RECORD

Date	Hours Used	Check Scraper	Check Belt	Check Spark Plug	Preparing For Storage	Comments

IDENTIFICATION AND ORDERING

MODEL AND SERIAL NUMBERS

The S140 has two identification numbers: a model number and a serial number. The two numbers are stamped on a decal which is located on the right side of the square tubing of the main frame. In any correspondence concerning the S140 supply model and serial numbers to assure that correct information and replacement parts are obtained.

To order replacement parts from an Authorized TORO Service Dealer, supply the following information:

1. Model and serial numbers of the S140.

2. Part number, description, and quantity of part(s) desired.

Note: Do not order by reference number if a parts catalog is being used; use the PART NUMBER.

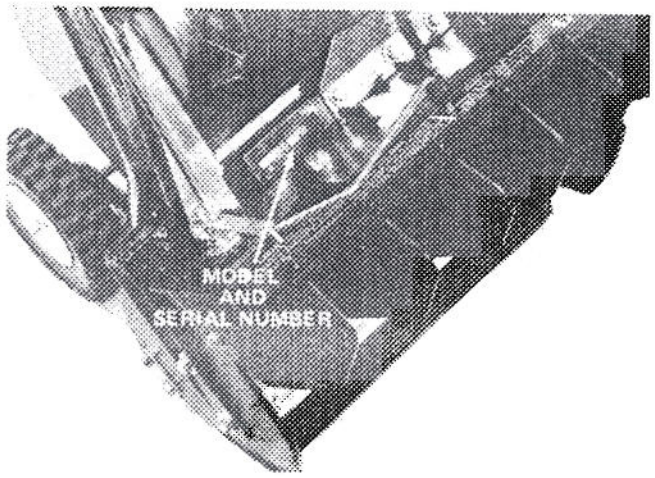

The Toro Promise

A One Year Limited Warranty

The Toro Company promises to repair any TORO Product if defective in materials or workmanship. The following time periods from the date of purchase apply:

Residential Product	1 Year
Residential Products Used Commercially . . .	45 Days

The costs of parts and labor are included, but the customer pays the transportation costs. Just return any residential product to an Authorized TORO Service Dealer or TORO Distributor.

Should you feel your TORO is defective and wish to rely on The Toro Promise, the following procedure is recommended:

1. Contact any Authorized TORO Service Dealer, TORO Master Service Dealer, or TORO Distributor (the Yellow Pages of your telephone directory is a good reference source).
2. He will either instruct you to return the product to him or recommend another Authorized TORO Service outlet which might be more convenient.
3. Bring the product along with your original sales slip, or other evidence of purchase date, to the service dealer.
4. The servicing dealer will inspect the unit, advise you whether the product is defective and, if so, make all repairs necessary to correct the defect without extra charge to you.

If for any reason you are dissatisfied with the dealer's analysis of the defect or the service performed, you may contact us.

Write:

TORO Customer Service Department
8111 Lyndale Avenue South
Minneapolis, Minnesota 55420

The above remedy of product defects through repair by an Authorized TORO Service Dealer is the purchaser's sole remedy for any defect.

THERE IS NO OTHER EXPRESS WARRANTY. ALL IMPLIED WARRANTIES OF MERCHANTABILITY AND FITNESS FOR USE ARE LIMITED TO THE DURATION OF THE EXPRESS WARRANTY.

Some states do not allow limitation on how long implied warranty lasts, so the above limitation may not apply to you.

This warranty applies only to parts or components which are defective and does not cover repairs necessary due to normal wear, misuse, accidents, or lack of proper maintenance. Regular, routine maintenance of the unit to keep it in proper operating condition is the responsibility of the owner.

All warranty repairs reimbursable under The Toro Promise must be performed by an Authorized TORO Service Dealer using Toro approved replacement parts.

Repairs or attempted repairs by anyone other than an Authorized TORO Service Account are not reimbursable under The Toro Promise. In addition, these unauthorized repair attempts may result in additional malfunctions, the correction of which is not covered by warranty.

The Toro Company is not liable for indirect, incidental or consequential damages in connection with the use of the product including any cost or expense of providing substitute equipment or service during periods of malfunction or non-use.

Some states do not allow the exclusion of incidental or consequential damages, so the above exclusion may not apply to you.

This warranty gives you specific legal rights, and you may also have other rights which vary from state to state.

Compliance with Radio Interference Regulations Certified.
Certifie Conforme au Reglement sur le Broullage Radioelectrique.

Litho in U.S.A.