FORM NO. 3311-758 Rev. A

TORO®

MODEL NO. 51170-1000001 & UP

OPERATOR'S MANUAL

20" ELECTRIC LAWN MOWER/TRIMMER



This Product is Listed by UNDERWRITERS LABORATORIES INC and Bears the Mark

ONLY COPY
DO NOT REMOVE
Tech. Publications

SAFETY INSTRUCTIONS



To assure optimum performance, and to gain knowledge of the mower/trimmer, it is essential that you or any other operator read and understand the contents of this manual before operating the mower. Pay particular attention to the instructions highlighted by the safety alert symbol. Failure to comply with the safety instructions may result in personal injury.

BEFORE OPERATING

1. Operate the mower/trimmer only after reading this manual. A replacement manual is available by sending complete model and serial number to: The Toro Company, 8111 Lyndale Avenue South, Minneapolis, Minnesota 55420. Attn: Publications.

2. Never allow children to operate the mower/trimmer or adults to operate it without proper instructions.

3. Become familiar with the controls and know how to stop the motors quickly.

4. Keep everyone, especially children and pets, away from the area of operation. Remove sticks, stones, wire and any other debris that might be picked up and thrown by the mower/trimmer.

5. Keep all shields and safety devices in place. If a shield, safety device or decal is defective or damaged, repair or replace it before operation is commenced.

6. Wear long pants and substantial shoes. Do not operate the mower/trimmer while wearing sandals, tennis shoes, sneakers or shorts. Do not wear loose fitting clothing that could get caught in moving parts.

7. If long grass will be cut, set height-of-cut in highest position. After mowing, reinspect the area and remove all debris. Then lower the height-of-cut and mow grass again.

WHILE OPERATING

8. Cutting grass with a rotary mower demands attention. Always maintain secure footing, balance and control.

9. Avoid dangerous environment — don't use mower/trimmer in damp or wet locations.

10. Don't use in rain.

11. Cut grass during daytime or when there is adequate artificial light. Cut grass slopes from side to side, but avoid slopes when grass is wet.

12. Keep face, hands and feet away from the mower/trimmer housing while the motors are running. Stay behind the handle until the motor and all moving parts stop.

13. Warning — To prevent electric shock use only with extension cord suitable for outdoor use.

14. Don't Abuse Cord — Never pull lawn mower/trimmer by cord or yank it to disconnect from receptacle. Keep cord away from heat, oil, and sharp edges.

15. Unplug the mower/trimmer before adjusting the height-of-cut.

16. If a gravel driveway, road or sidewalk must be crossed, stop the motor so loose sand and rocks are not thrown.

17. If mower/trimmer strikes a foreign object follow these steps:
    a. Stop mower/trimmer.
    b. Unplug power cord.
    c. Inspect for damage.
    d. Repair any damage before restarting and operating the mower/trimmer.

18. Don't Force Mower/Trimmer—It will do the job better and safer at the rate for which it was designed.

19. Don't Overreach — Keep proper footing and balance at all times.

20. Disconnect mower/trimmer from the power supply when not in use, storing, before servicing, or when changing accessories such as monofilament line, etc.

21. Mow in a back and forth manner. Do not run over extension cord.

MAINTENANCE

22. The extension cord and all wires on mower/trimmer must always be in good condition. Check before each use to assure they are not worn or cut. Contact an Authorized TORO Service Dealer if repairs or service are needed.

23. Store Idle Lawn Mower Indoors — When not in use, mower/trimmer should be stored indoors in dry, locked-up place — out of reach of children.

24. Perform only those maintenance instructions described in this manual. If major repairs are ever needed or if assistance is desired, contact an Authorized TORO Service Dealer.

25. If a guard, cover, safety device or safety decal is damaged, replace the defective part(s) before operating the mower/trimmer.

26. To assure optimum performance and safety, use genuine TORO replacement parts and accessories to keep the TORO all TORO. NEVER USE "WILL FIT" REPLACEMENT PARTS AND ACCESSORIES.

COPYRIGHT © ALL RIGHTS RESERVED
The Toro Company — 1981
MINNEAPOLIS, MN 55420 — U.S.A.

ASSEMBLY INSTRUCTIONS

Your Toro Mower/Trimmer comes assembled in the carton. No tools are needed. Adjust the upper handle and secure the power cord as directed below. For your safety, do not operate until you have read the Safety Instructions in this manual.

Cutting Line

To avoid line tangle during shipment the tip of the monofilament line has been taped to the head assembly. The tape must be removed before mower/trimmer is plugged into power source.

Handle Assembly

The upper handle is folded over the mower during shipping. Loosen the knobs on both sides and lift handle into operating position. Retighten the knobs.

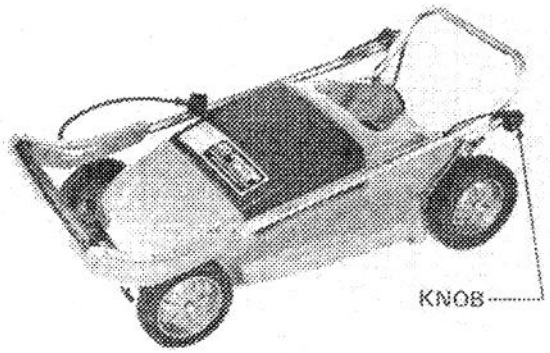

Figure 1

CAUTION

Always unplug mower from power source before adjusting wheels, handling deck, cutting line or spools.

Wheel Adjustment

As assembled your Toro Mower/Trimmer cutting height is 1 1/2". Adjustment can be made to cutting heights of 1 1/2", 2 1/4" or 3 inches.

1. Hold front or rear of mower/trimmer housing with one hand and grasp wheel with other hand (Fig. 2).

2. Raise mower/trimmer housing until wheel is off the ground. Pull wheel toward end of housing allowing it to be raised or lowered.

NOTE: Raising wheel lowers height of cut. Lowering wheel raises height of cut.

3. When desired operating height is attained allow wheel to spring back into locking position.

4. Repeat procedure on other wheels to complete adjustment.

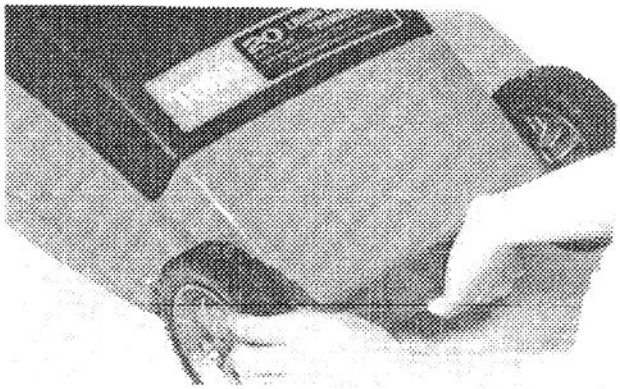

Figure 2

EXTENSION CORDS

The proper extension cord is a must for safe and efficient use of your mower/trimmer. Your extension cord should be suitable for outdoor use and comply with the requirements specified in the International Electric Code and marked as such. Refer to the following table for proper extension cord usage. Examine the extension cord periodically and replace immediately if damaged.

Extension Cord Length in Feet	0-50	50-100
Required wire size (A.W.G.) in cord	16	14

Tie the extension cord to the mower/trimmer cord before connecting the two components to prevent separation of the two during operation (Fig. 3). Then, insert extension cord into wall outlet.



Figure 3

KNOW YOUR MOWER/TRIMMER

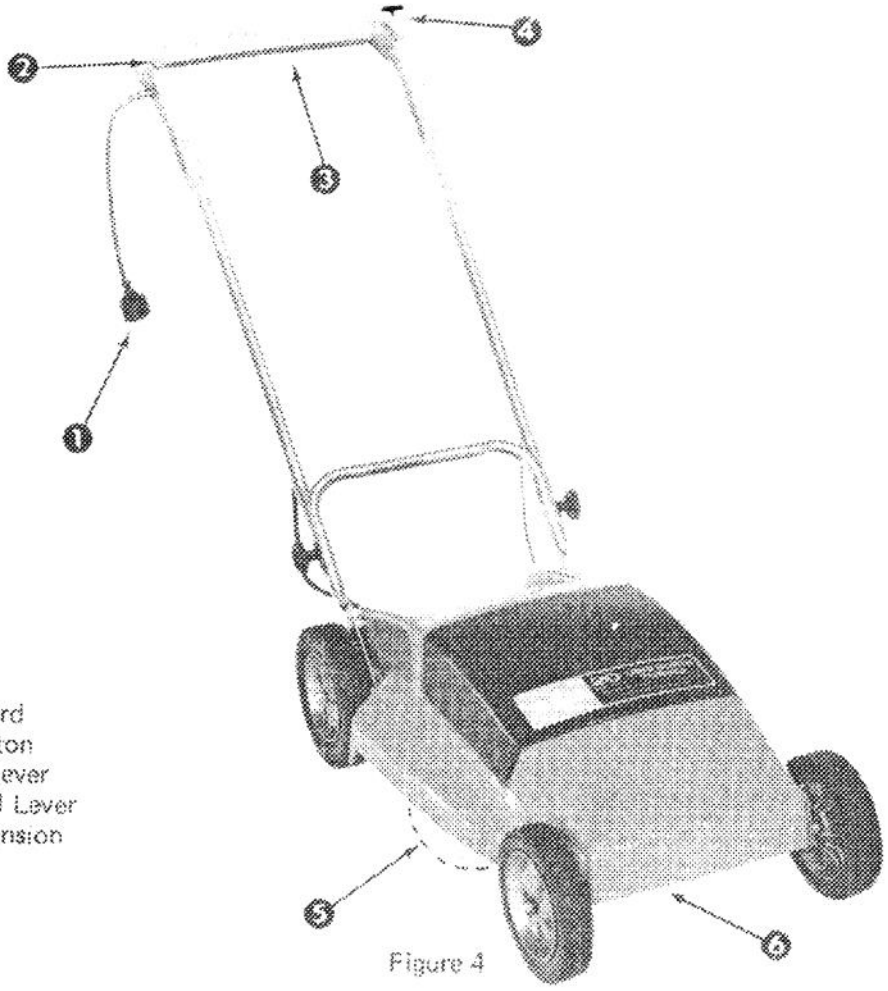

1. Power Cord
2. Start Button
3. Control Lever
4. Line Feed Lever
5. Line Extension
6. Housing

Figure 4

SAFETY DECALS

Safety decals and instructions are easily visible to the operator and are located near any area of potential danger. Replace any decal that is damaged.

ON REAR OF MOWER HOUSING

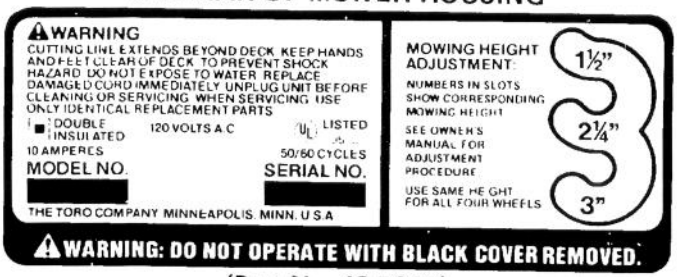

(Part No. 43-7960)

ON SIDES OF MOWER HOUSING



(Part No. 43-9130)

QUESTIONS AND ANSWERS

Q. How is the Toro Mower/Trimmer different from other mowers?

A. Your Toro Mower/Trimmer cuts grass with monofilament line. Four lines extend beyond each side of the mower deck to trim while you mow. It's automatic line feed system and lightweight make it easy to use.

Q. Will the monofilament line cut grass without breaking?

A. Some line wear is normal when cutting grass. Under extreme conditions, when trimming around solid or sharp objects, the line may break. More line can be advanced using Toro's automatic line feed system.

Q. How will I know when line is worn?

A. You'll recognize worn line if the width of cut narrows or if visual inspection shows wear. New line can be advanced using Toro's automatic line feed system.

Q. How does the automatic line feed system work?

A. With motor running, quickly pull back on line feed lever on left side of handle, and release. New line will automatically advance and cut off at the proper length. You will hear the lines strike the cut off blade on the under side of the mower deck. This sound is normal and will last only momentarily.

OPERATING INSTRUCTIONS

⚠ CAUTION

Dress properly before operating mower/trimmer. Always wear safety glasses or other suitable eye protection, long pants, heavy shoes and socks.

NOTE: The Mower/Trimmer is designed to perform best with upright grasses like blue grass, rye grass and fescue grass. In bent or creeping grasses like Bermuda grass, results may be less satisfactory.

⚠ CAUTION: Inspect area to be mowed. Remove any sticks, wire, cord or string-like matter which could become entangled in the rotating lines.

⚠ CAUTION

The monofiliament line extends 3/4" beyond the edge of both sides of the mower housing. Keep clear of these areas. Failure to do so may cause personal injury.

STARTING AND STOPPING

1. Lift control lever and push start button. Mower will start instantly (Fig. 5).

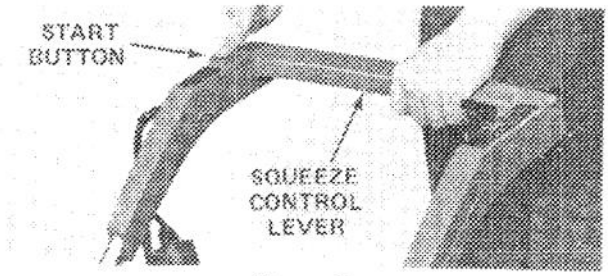

Figure 5

2. Mower will continue running while control lever is in up position. When lever is released the mower will stop (Fig.6).



Figure 6

OPERATING TIPS

1. Mow the area nearest the outlet first.

2. Mow in a back and forth manner. DO NOT run over extension cord.

IMPORTANT: DO NOT ALLOW YOUR EXTENSION CORD TO BECOME WRAPPED AROUND TREES, SHRUBS OR OTHER OBSTACLES. By following the technique described in Fig. 7, you will save your extension cord from unnecessary wear.

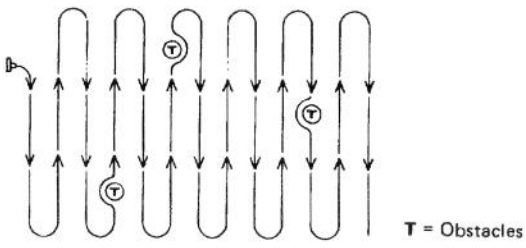

Figure 7

OPERATING INSTRUCTIONS

3. Turn mower off when crossing rocky or sandy area.



Figure 8

⚠ CAUTION: Unplug mower when leaving it unattended, even for short periods. Always unplug extention cord after use and store in a dry place.

4. MOW WHEN THE GRASS IS DRY – Mow either in the late morning to avoid the dew or in late afternoon to avoid the damage that can be caused by direct sunlight on the sensitive, freshly mowed grass. You'll also lessen the chance of slipping on wet grass.

5. SELECT THE HEIGHT-OF-CUT SETTING TO SUIT CONDITIONS – Removal of approximately one inch or no more than one-third of the grass blade cannot be over emphasized. Grass, being a living plant, is very sensitive to stress. If you remove more than one-third of the grass blade, the grass may be shocked and unable to maintain the deep root structure it needs to reach an adequate water supply in the soil. Further, the shocked plant will also be more prone to attacks from weeds, insects, pests and disease.

6. MOW AT PROPER INTERVALS – Under most normal conditions you'll need to mow approximately every 4-5 days. But remember, grass grows at different rates at different times. This means that in order to maintain the same height-of-cut, which is good practice, you'll need to cut more frequently in early Spring, perhaps every 4 or 5 days; as the grass growth rate slows in mid-Summer, only every 8-10 days. If you are unable to mow for an extended period due to vacation, weather conditions, or other reasons, mow first with the height-of-cut at a high level; then mow again 2-3 days later with a lower height setting.

7. Walk slowly when operating mower.

8. Advance new line when width of path being cut narrows or line is no longer visable from under housing.

INDEXING LINE

As cutting line wears, new line can be advanced using Toro's automatic line feed feature. The line feed lever is located on left side of handle. Pull lever back and release quickly . . . line will automatically feed out and cut off to the proper length. You will hear the lines strike the cut off blade on the under side of the mower deck. This sound is normal and will last only momentarily.

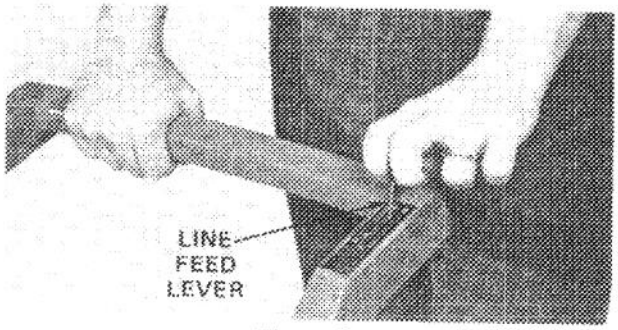

Figure 9

IMPORTANT: Do not hold line feed lever in back position. Doing so will cause excessive wear to parts.

TRIMMING

The monofilament cutting line extends beyond the edge of both sides of the mower/trimmer housing. This special feature allows you to trim around walls, fences and trees while mowing. For best results trim using right side of mower/trimmer.

Remember only the very tip of the nylon line does the cutting. Do not force the mower/trimmer against obstacles. Cutting with more than the tip of the line will reduce cutting efficiency and cause unnecessary line wear.

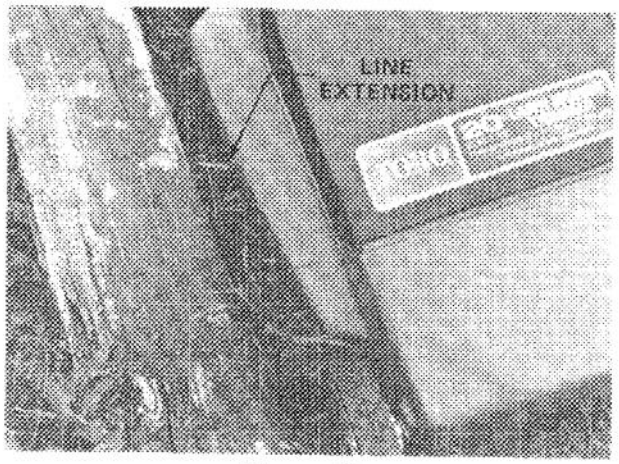

Figure 10

MAINTENANCE

⚠ CAUTION: Always unplug power source and be sure cutting lines have come to a complete stop before handling deck, cutting line or spools.

SPOOL REPLACEMENT

Your Mower/Trimmer comes with 2-25' lengths of line on each spool. As more line is needed, pre-wound spools are available from your local Toro retailer.

⚠ CAUTION: Do not handle mower by cut off blade.

1. Turn mower/trimmer completely over (Fig. 11).
2. Remove screws securing drum cover to drum and lift off cover (Fig. 11).

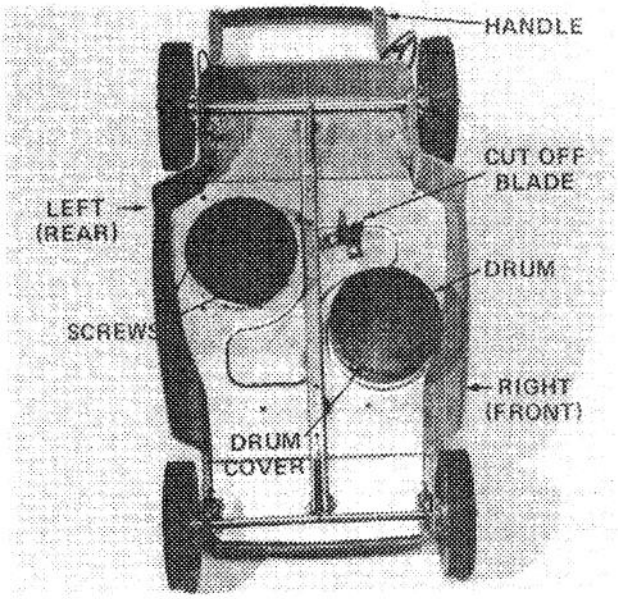

Figure 11

IMPORTANT: The two automatic line feed assemblies consist of the following parts: drum, spool, spring, retaining nut, drum cover and screws (Fig. 12). These parts are not interchangeable from one line feed assembly to the other. To avoid the possibility of mixing parts, complete replacement of one spool before beginning the second. Refer to drum and spool identification, page 8 for added information.

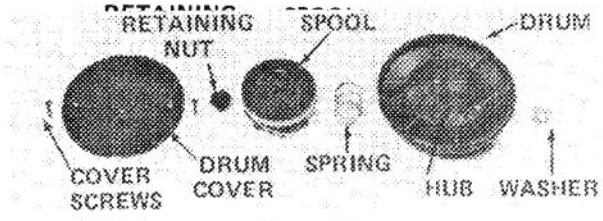

Figure 12

3. Remove retaining nut.
   A. Right (front) . . . turn counterclockwise.
   B. Left (rear) . . . turn clockwise.
4. Slip entire drum assembly (Fig. 13) off motor shaft and discard empty spool.

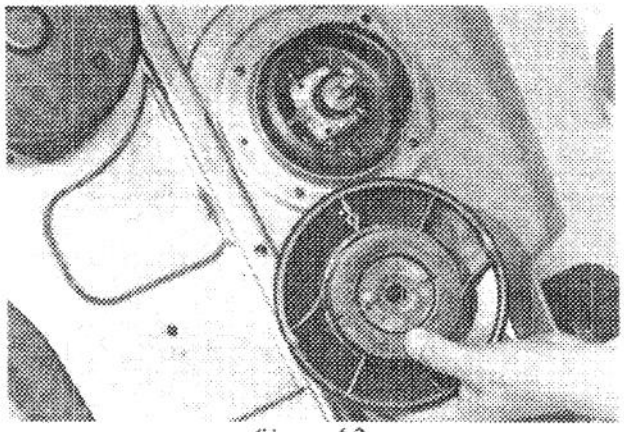

Figure 13

5. Thoroughly clean any grass or debris from spool and drum area and around motor shaft before installing new spool.
6. Place spring over hub in drum. While aligning spool notches with drum eyelets, place new spool over spring.
7. Feed cutting line through drum eyelets.

NOTE: Allow no more than 4 inches of line to extend from drum.

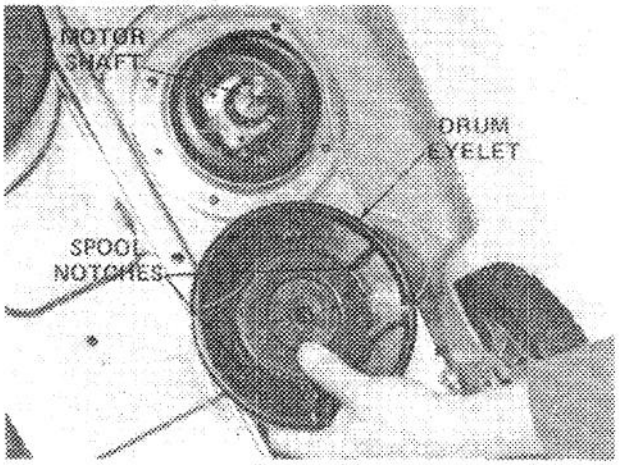

Figure 14

8. Align spool flats with flats on motor shaft and slip entire assembly (Fig. 14) onto motor shaft. Secure assembly with retaining nut.
9. Reinstall Drum Cover.

MAINTENANCE

IMPORTANT: Do not operate mower without drum covers installed.

IMPORTANT: Remember line feed assembly parts are not interchangeable from one assembly to another.

TO UNTANGLE SPOOL

If line becomes tangled or breaks off inside drum, remove spool as instructed in Spool Replacement, page 7, then proceed as follows:

1. Unwind enough line to free tangle in spool or enough to feed line through drum eyelet.

NOTE: If a large amount of cutting line is unwound from spool, rewind as instructed in following steps.

2. Make sure the cutting line ends are threaded through spool holes and into groove.

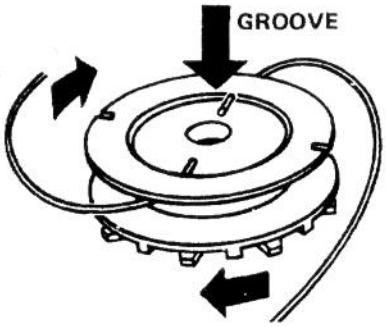

Figure 15

3. Position spool as shown in Fig. 15 and wind both lines together in level rows between spool flanges. Wind left (rear) spool in clockwise direction; right (forward) spool in counterclockwise direction.

NOTE: Do not cross lines when winding.

4. Keep line tight while winding. Secure by looping ends of line in notches.

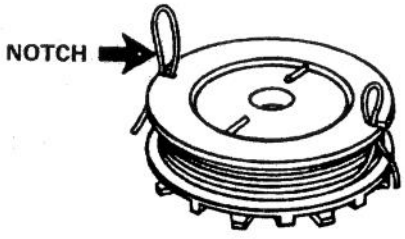

Figure 16

IMPORTANT: Remember line feed assembly parts are not interchangeable from one assembly to another. The following descriptions will help you distinguish the parts belonging to each assembly.

DRUM AND SPOOL IDENTIFICATION

LEFT (rear) ASSEMBLY

Drum – Part number 43-5650 LH, located on top of drum as illustrated.

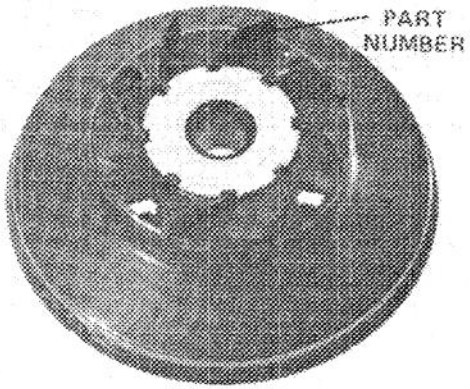

Figure 17

Spool – Note stamped winding directions on spool. Spools with left hand wind fit left (rear) assembly (Fig. 18).

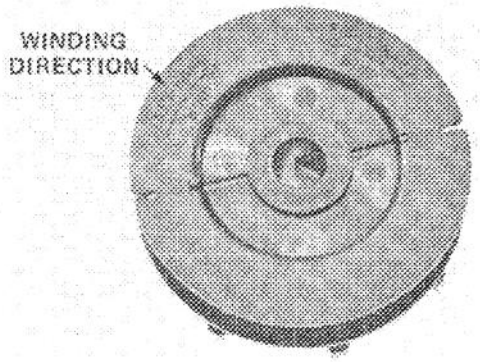

Figure 18

Spring – Gold color.

Retaining Nut – Stamped on nut "To Remove LH".

RIGHT (front) ASSEMBLY

Drum – Part number 43-5660 RH located on top of drum as illustrated.

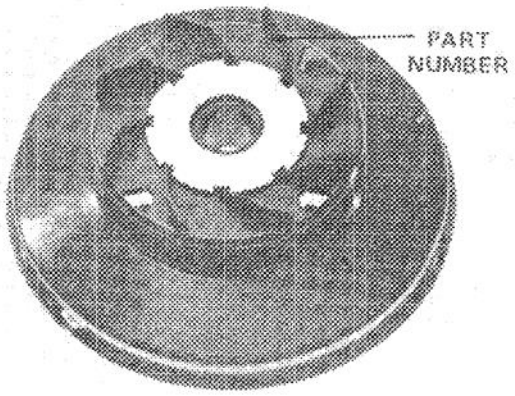

Figure 19

MAINTENANCE

Spool – Note stamped directions on spool. Spools with right hand wind fit right (front) assembly.

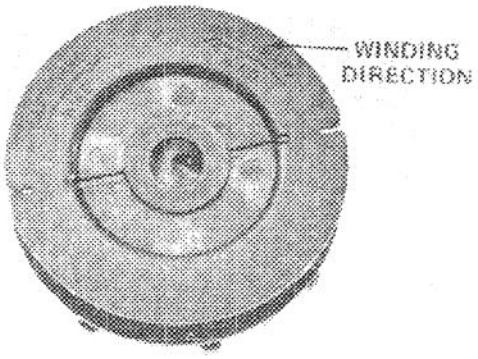

Figure 20

Spring – Silver color.

Retaining Nut – Stamped on nut "To Remove RH".

WHEEL LUBRICATION

1. After every 25 hours of operation or at the end of the mowing season, whichever comes first, apply 2 or 3 drops of light oil to the outside of all the wheel spacers (Fig. 21). Spin the wheel to distribute oil into the wheel spacer. Wipe up any excess oil.

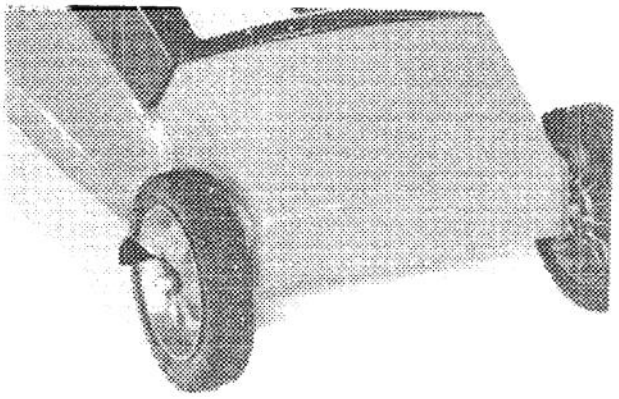

Figure 21

CLEANING MOWER

⚠ CAUTION: Always unplug mower/trimmer before attempting any maintenance. Keep mower/trimmer away from water.

1. Exterior housing can be cleaned by wiping with a damp cloth, never hose it down.

2. The motor housing must be cleaned after every 20 hours of motor operation if the motors are operated in clean air conditions. The housing must be cleaned more frequently, however, when mower is operated in dusty or dirty conditions.

   a. Unplug mower/trimmer from power source and wait for motors to completely stop.
   b. Remove four screws securing cover to housing.
   c. Clean grass or other debris from around motors with a soft brush or dry rag.
   d. Reinstall cover to housing.

3. Grass or other debris may be removed from under housing by using a scraper and damp cloth.

4. Clean out drum eyelets regularly. Debris will hamper line indexing.

5. Thoroughly clean any grass or debris from spool, drum, and motor shaft area before installing new spool.

GENERAL MAINTENANCE

1. Check and tighten all fasteners regularly.

2. Use only TORO replacement parts.

3. Replace or repair damaged extension cords.

4. Check condition of cut off blade and replace if worn.

MODEL AND SERIAL NUMBERS

The MOWER/TRIMMER has two identification numbers: a model number and a serial number. The two numbers are stamped into a decal located on back of mower housing. In any correspondence concerning the mower, supply model and serial numbers to assure correct information.

To order replacement parts from an Authorized TORO Service Dealer, supply the following information:

1. Model and serial numbers of the mower.

2. Part number, description and quantity of part(s) desired.

NOTE: Do not order by reference number if a parts catalog is being used; use the PART NUMBER.

MAINTENANCE RECORD

Date								

MAINTENANCE RECORD

Date								

The Toro Promise

A ONE YEAR LIMITED WARRANTY

The Toro Company promises to repair your TORO Product if defective in materials or workmanship. The following time periods from the date of purchase apply:

Residential Product	1 Year
Residential Products Used Commercially . . .	45 Days

The costs of parts and labor are included, but the customer pays the transportation costs. Just return any residential product to an Authorized TORO Service Dealer or TORO Distributor.

Should you feel your TORO Product is defective and wish to rely on The Toro Promise, the following procedure is recommended:

1. Contact any Authorized TORO Service Dealer, TORO Master Service Dealer, or TORO Distributor (the Yellow Pages of your telephone directory is a good reference source).
2. He will either instruct you to return the product to him or recommend another Authorized TORO Service outlet which might be more convenient.
3. Bring the product along with your original sales slip, or other evidence of purchase date, to the service dealer.
4. The servicing dealer will inspect the unit, advise you whether the product is defective and, if so, make all repairs necessary to correct the defect without extra charge to you.

If for any reason you are dissatisfied with the dealer's analysis of the defect or the service performed, you may contact us.

Write:

TORO Consumer Service Department
8111 Lyndale Avenue South
Minneapolis, Minnesota 55420

The above remedy of product defects through repair by an Authorized TORO Service Dealer is the purchaser's sole remedy for any defect.

THERE IS NO OTHER EXPRESS WARRANTY. ALL IMPLIED WARRANTIES OF MERCHANTABILITY AND FITNESS FOR USE ARE LIMITED TO THE DURATION OF THE EXPRESS WARRANTY.

Some states do not allow limitations on how long an implied warranty lasts, so the above limitation may not apply to you.

This warranty applies only to parts or components which are defective and does not cover repairs necessary due to normal wear, misuse, accidents, or lack of proper maintenance. Regular, routine maintenance of the unit to keep it in proper operating condition is the responsibility of the owner.

All warranty repairs reimbursable under The Toro Promise must be performed by an Authorized TORO Service Dealer using Toro approved replacement parts.

Repairs or attempted repairs by anyone other than an Authorized TORO Service Account are not reimbursable under The Toro Promise. In addition, these unauthorized repair attempts may result in additional malfunctions, the correction of which is not covered by warranty.

THE TORO COMPANY IS NOT LIABLE FOR INDIRECT, INCIDENTAL OR CONSEQUENTIAL DAMAGES IN CONNECTION WITH THE USE OF THE PRODUCT INCLUDING ANY COST OR EXPENSE OF PROVIDING SUBSTITUTE EQUIPMENT OR SERVICE DURING PERIODS OF MALFUNCTION OR NON-USE.

Some states do not allow the exclusion or limitation of incidental or consequential damages, so the above limitation or exclusion may not apply to you.

This warranty gives you specific legal rights, and you may also have other rights which vary from state to state.

COUNTRIES OTHER THAN THE UNITED STATES OR CANADA

Customers who have purchased TORO products exported from the United States or Canada should contact their TORO Distributor (Dealer) to obtain guarantee policies for your country, province or state. If for any reason you are dissatisfied with your Distributor's service or have difficulty obtaining guarantee information, contact the TORO importer. If all other remedies fail, you may contact us at The Toro Company.

Compliance with Radio Interference Regulations Certified.
Certifie Conforme au Reglement sur le Brouillage Radioelectrique.

Litho in U.S.A