Form No. 3387-429 Rev A

TORO®

Count on it.

Operator's Manual

# Reelmaster® 5, 7, and 11-Blade Reel Mower

**Model No. 01005—Serial No. 240000001 and Up**
**Model No. 01007—Serial No. 240000001 and Up**
**Model No. 01011—Serial No. 240000001 and Up**

Register at www.Toro.com.
Original Instructions (EN)

*3387-429* A

# Introduction

Read this information carefully to learn how to operate and maintain your product properly and to avoid injury and product damage. You are responsible for operating the product properly and safely.

You may contact Toro directly at www.Toro.com for product and accessory information, help finding a dealer, or to register your product.

Whenever you need service, genuine Toro parts, or additional information, contact an Authorized Service Dealer or Toro Customer Service and have the model and serial numbers of your product ready. The two numbers are stamped on a plate which is located on the cross tube. Write the numbers in the space provided.

**Model No.** _____

**Serial No.** _____

This manual identifies potential hazards and has safety messages identified by the safety alert symbol (Figure 1), which signals a hazard that may cause serious injury or death if you do not follow the recommended precautions.



**Figure 1**

1. Safety alert symbol

This manual uses 2 words to highlight information. **Important** calls attention to special mechanical information and **Note** emphasizes general information worthy of special attention.

# Contents


Safety ..... 3
Setup ..... 4
1 Removing the Mower from the Carton ..... 4
2 Checking the Wheel Hubs and Installing the Wheels ..... 4
3 Checking the Gear Case Oil ..... 5
4 Checking the Reel Bearings and Mower Fasteners ..... 5
5 Parallel the Bedknife to the Reel ..... 6
6 Setting the Height Of Cut ..... 7
Product Overview ..... 8
Specifications ..... 8
Operation ..... 8
Adjusting the Bedknife to the Reel for Light Contact ..... 8
Operating Tips ..... 9
Causes of Poor Quality of Cut ..... 9
Maintenance ..... 11
Lubrication ..... 11
Adjusting the Reel Bearings ..... 11
Grinding ..... 11
Lapping ..... 12
Replacing the Bedknife ..... 12
Adjusting the Reel, Roller and Wheel Bearing ..... 13
Servicing the Roller ..... 13



**© 2014—The Toro® Company**
**8111 Lyndale Avenue South**
**Bloomington, MN 55420**





**Contact us at www.Toro.com.**
**Printed in the USA.**
**All Rights Reserved**

# Safety

**To control hazards and prevent accidents, it is essential that those who operate, transport, maintain, and store the machine be aware, concerned, and properly trained. Improperly using the machine can result in injury or death. To reduce the potential for injury or death, comply with the following safety instructions.**

- Read, understand, and follow all instructions in the traction unit and the cutting unit operator's manual before operating the cutting unit.
- Never allow children to operate the traction unit or cutting units. Do not allow adults to operate traction unit or cutting units without proper instruction. Only trained operators who have read this manual should operate the traction unit or cutting units.
- Never operate the cutting units when under the influence of drugs or alcohol.
- Keep all shields and safety devices in place. If a shield, safety device or decal is illegible or damaged, repair or replace it before operation is commenced. Also tighten any loose nuts, bolts, and screws to ensure that the cutting unit is in safe operating condition.
- Always wear substantial shoes. Do not operate the cutting units while wearing sandals, tennis shoes, or sneakers. Also, do not wear loose fitting clothing which could get caught in moving parts. Always wear long pants. Wearing safety glasses, safety shoes and a helmet is advisable and required by some local ordinances and insurance regulations.
- Remove all debris or other objects that might be picked up and thrown by the cutting unit reel blades. Keep all bystanders away from the working area.
- If the cutting blades strike a solid object or the unit vibrates abnormally, stop and shut the engine off. Check cutting unit for damaged parts. Repair any damage before starting and operating the cutting unit.
- Lower the cutting units to the ground, and remove key from ignition switch whenever you leave the machine unattended.
- Ensure that the cutting units are in safe operating condition by keeping nuts, bolts, and screws tight.
- Remove the key from the ignition switch to prevent the engine from accidently starting when servicing, adjusting, or storing the machine.
- Perform only those maintenance instructions described in this manual. For major repairs or assistance, contact an Authorized Toro Distributor.
- To ensure optimum performance and safety, always purchase genuine Toro replacement parts and accessories to keep the Toro all Toro**. Never use "will-fit" replacement parts and accessories made by other manufacturers**. Using unapproved replacement parts and accessories could void the warranty.

# Setup

## Loose Parts

Use the chart below to verify that all parts have been shipped.

| Procedure | Description | Qty. | Use |
|---|---|---|---|
| 1 | No parts required | – | Remove the mower from the carton |
| 2 | No parts required | – | Check the wheel hubs and install the wheels |
| 3 | No parts required | – | Check the gear case oil |
| 4 | No parts required | – | Check the reel bearings and mower fasteners |
| 5 | No parts required | – | Parallel the bedknife to the reel |
| 6 | No parts required | – | Set the height of cut |

## Media and Additional Parts

| Description | Qty. | Use |
|---|---|---|
| Parts Catalog<br>Operator's Manual | 1<br>1 | Review the material and save in an appropriate place. |

**Note:** Determine the left and right sides of the machine from the normal operating position.

1

## Removing the Mower from the Carton

### No Parts Required

### Procedure

1. Slit the four corners of the carton so the sides lie flat.
2. Remove the shipping caps from the wheel hubs.

   **Note:** Keep the shipping caps. They can be installed on wheel hubs to prevent grinding dust from entering wheel bearing whenever reel is ground.

2

## Checking the Wheel Hubs and Installing the Wheels

### No Parts Required

### Procedure

1. Rotate the wheel hub (Figure 2) to check the bearing adjustment. A slight drag must be felt when the hub is rotated. If drag is not evident, tighten the wheel hub nut (Figure 2) until slight drag is felt when the hub is rotated.

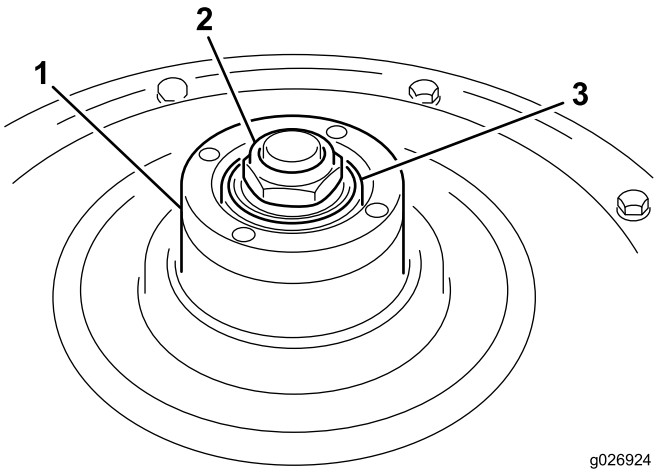


**Figure 2**

1. Wheel hub
2. Wheel hub nut
3. O–ring

**Important: Do not over–tighten the wheel hub nut because the bearing will wear rapidly.**

2. Check the O–ring to assure it is not damaged, and make sure it is seated in the inside diameter of wheel hub (Figure 2).

**Important: An O–ring that is damaged or installed incorrectly will allow oil to leak out of the gear case. If enough oil leaks out, mechanical damage will likely result.**

3. If pneumatic wheels are installed, set the tire pressure at 241.3 Kpa (35 psi).
4. Install drive wheels with capscrews and lockwashers (Figure 3). Do not try to install the wheels over the shipping caps

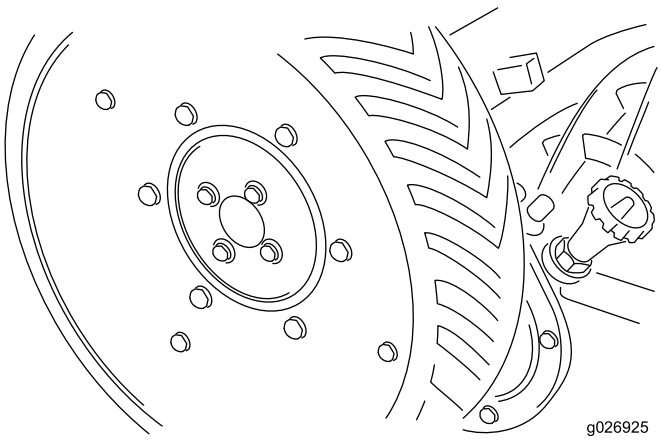


**Figure 3**

# 3

# Checking the Gear Case Oil

## No Parts Required

## Procedure

1. Position the mower on a level surface.
2. Raise and block the back of the mower until there is approximately 0.260 m (10–1/4 inches) between the bottom of the gear case extending behind the roller bracket and the level surface (Figure 4).

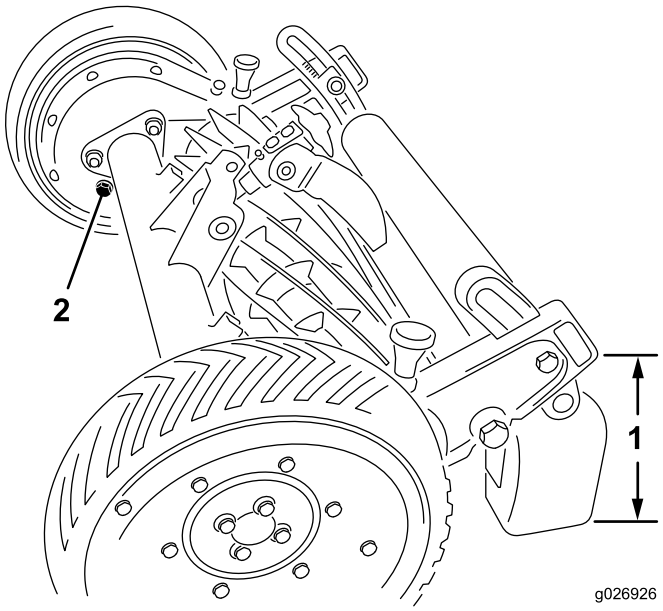


**Figure 4**

1. 0.260 m (10–1/4 inches)
2. Filler plug

3. Remove the filler plug from inside of each the gear case (Figure 4). Check the oil level in the gear case: it should be level with the bottom of the filler hole. If the oil is level with bottom of the hole, reinstall filler plug.

**Important: Check for oil leaks caused by a defective or improperly installed O–ring or gasket, and loose side plate bolts. Make all repairs before adding oil to the gear cases.**

4. If level of oil is low, fill gear case to point of overflowing with SAE 80–90 gear lube and reinstall filler plug. DO NOT OVERFILL.

# 4

# Checking the Reel Bearings and Mower Fasteners

## No Parts Required

## Procedure

1. Rotate the center adjusting knob until the bedknife does not contact the reel. Try to spin the reel. If the reel does not spin, adjust the reel bearings; refer to Adjusting the Reel Bearing in the Maintenance Section. If the reel spins freely, proceed to the next step.
2. Try to move the reel back and forth. If the reel can be moved, the reel bearings must be adjusted; refer to Adjusting the Reel Bearing in the Maintenance Section.
3. Check and tighten all nuts, bolts, and screws to assure all parts are secure.

# 5

# Parallel the Bedknife to the Reel

## No Parts Required

## Procedure

1. Position the mower on a level surface. Remove any paint and grease from the bedknife and the reel cutting edges.
2. Make sure the throwout knobs (Figure 5) are disengaged and the bedknife to reel contact is removed by turning the bedknife adjustment knob counterclockwise.
3. Insert a long strip of newspaper between the reel blade and the bedknife. While rotating the reel backward, turn the bedknife adjusting knob (Figure 5) clockwise, one click at a time, until the paper is pinched lightly, which results in the paper being cut or a slight drag when the paper is pulled.

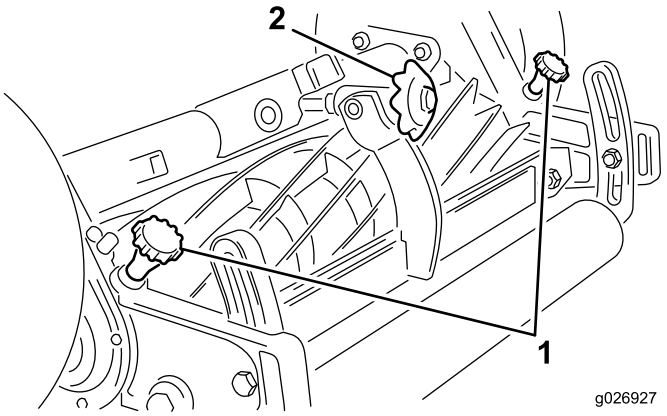


**Figure 5**

1. Throwout knobs
2. Bedknife adjusting knob

4. Continue to check for light contact across the full length of bedknife using paper. If light contact is not evident, the bedknife is not parallel to the reel.
5. Loosen the nut on the left bedbar pivot bolt enough to ease turning of eccentric bolt.
6. Parallel the bedknife to the reel by rotating the left bed–bar pivot bolt (Figure 6). The left pivot bolt has an offset thread which, when rotated, acts as a cam to raise or lower the bedbar. On the left hand pivot bolt there is an offset dot (Figure 6) which denotes the thread of the bolt. When the dot is in the up position (Figure 6) the left end of bedbar is raised. As the bolt is turned clockwise and the dot is lowered, so is the left end of the bedbar. The identification dot is to be positioned within the rear (180 degree) position when adjusting.

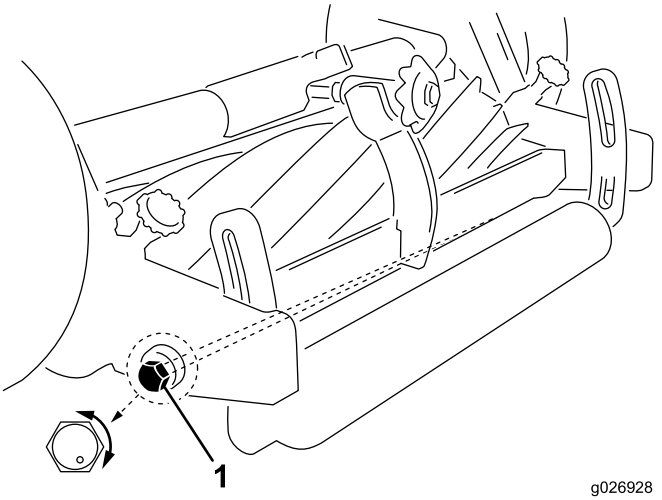


**Figure 6**

1. Bedbar pivot bolt

7. Rotate the left pivot bolt to raise or lower the bedbar.
8. Insert a long strip of newspaper between the reel blade and the bedknife. While rotating the reel backward, turn the bedknife adjusting knob clockwise, one click at a time, until the paper is pinched lightly, which results

in the paper being cut or a slight drag when the paper is pulled.

9. When light contact is evident across the full length of bedknife, tighten the pivot bolt nut, while holding the bolt in position and check to make sure the pivot bolt did not become misadjusted when tightened. Readjust as required.

   **Important: To make sure the bedknife and the reel are not damaged while the mowers are transported to or installed on the towing frame, rotate the bedknife adjusting knob counterclockwise until bedknife does not touch the reel.**

# 6

# Setting the Height Of Cut

## No Parts Required

## Procedure

The height of cut is adjustable in approximately 2.38 mm (3/32 inch) increments by raising or lowering rear roller.

1. Loosen the capscrews securing the adjusting nuts in the roller brackets (Figure 7).

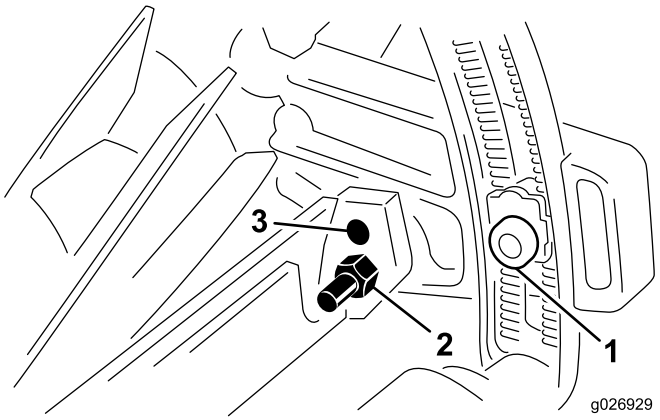


**Figure 7**

1. Bottom edge of adjusting nut
2. 11 blade mounting hole
3. 5 and 7 blade mounting hole

2. Position the roller adjusting nuts in the desired notches and tighten the capscrews. Make sure the same number of notches show below the adjusting nuts.
3. If a higher height of cut is desired, every notch moved adds approximately 2.38 mm (3/32 of an inch) to the cutting height.

   **Note:** These are bench settings. The mower will cut at a different height in turf because of grass conditions and the weight of the mower.

4. To make a finer adjustment to the cutting height or to adjust the roller, the adjusting nut may be moved 1/2 notch or 1.19 mm (3/64 of an inch) by using the following procedure:

   A. Remove the capscrew and the adjusting nut securing the roller bracket to the gear case. Do not move the roller bracket

   B. Reposition the capscrew and the adjusting nut to the upper hole in the gear case.

   C. Slide the roller bracket up or down 1/2 notch to position the adjusting nut into the correct notch and tighten the capscrew.

# Product Overview

## Specifications

| | |
|---|---|
| Weigh<br>11 Blade<br>7 Blade<br>5 Blade<br>(All with 0.406 m (16 inch) semi–pneumatic tires, without draw bars) | <br>114 kg (252 lb)<br>112 kg (248 lb)<br>110 kg (243 lb) |
| Width | 1.054 m (41–1/2 inches) with iron wheels, 1.143 m (45 inches) with semi–pneumatic tires. |
| Height | 0.406 m (16 inches) or 0.457 m (18 inches) depending on tires. |

# Operation

**Note:** Determine the left and right sides of the machine from the normal operating position.

## Adjusting the Bedknife to the Reel for Light Contact

**Important: After the mower is set up and installed on the towing frame, the bedknife and reel must be adjusted for light contact. Adjust the bedknife to the reel while the mower is setting on the grass to be cut because the force of turf against underside of bedknife during actual operation must be duplicated to ensure correct setting. To assure sharp cutting edges, the bedknife and reel must have light contact.**

1. Stand behind the mower
2. Disengage the reel throwout knobs (Figure 8). Carefully spin the reel backward to insure free movement
3. While spinning the reel backward, rotate the bedknife adjusting knob counterclockwise (Figure 8) until the bedknife does not touch the reel blades.

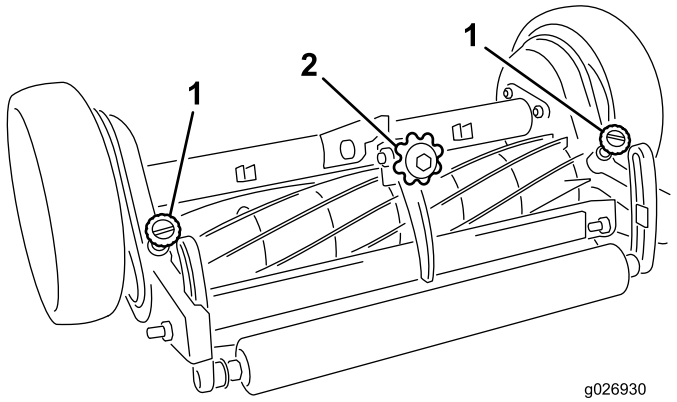


**Figure 8**

1. Throwout knobs
2. Bedknife adjusting knob

4. While spinning the reel backward, rotate the adjusting knob clockwise (Figure 8), one click at a time, until light contact of the bedknife and the reel is noticed or a whispering cutting sound is heard.

   **Note:** The spring arm (clicker) may be adjusted for positive detent by loosening the capscrews securing the spring arm to the adjustment arm retainer, adjust until a solid clicking sound is achieved when the adjusting knob is turned, and retighten the capscrews.
5. Check the reel "carry over" by spinning the reel backward again. The reel should rotate one to two complete revolutions. Less than one revolution indicates heavy contact, which means the bedknife and reel must be readjusted for light contact; refer to steps 1, 3 and 4.

6. At the beginning of the cutting day, when the reels are cold, engage the reel throwout knobs (Figure 8). Operate the mowers for 15 to 20 minutes so the bedknife and reel reach normal operating temperature; then stop the operation. Next, disengage the reel throwout knobs and spin the reel backward. A whispering sound, not clicking, should be emitted, and this assures the correct adjustment. If a whispering sound is not heard, the bedknife and reel must be readjusted; refer to steps 3–5. By contrast, when the reels are warm from being used, use only steps 1–5 to maintain light contact between the bedknife and the reel.

**Important: Never adjust the bedknife to the reel for light contact if the mowers are cold because the increase in temperature during operation could cause the metal to expand and result in heavy contact. Heavy contact causes uneven bedknife wear and poor quality of cut. However, light contact between the bedknife and the reel, which is desirable, minimizes the wear and keeps the cutting edges sharp. Adjust for light contact every four hours or sooner, even though quality of cut is acceptable. When mowers are operated in sparse grass or the temperature of the air is high, the adjustment for light contact must be checked even more frequently to avoid heavy contact between the bedknife and reel. If mowers are not operated for a short time, one hour after any use, check for light contact after resuming operation for 15 to 20 minutes; refer to steps 1–6.**

# Operating Tips

1. **Mowing Speed** – The mower is designed to cut grass well at any ground speed between 1.6 and 9.66 km/hr (1 and 6 mph) but for most turf conditions, ground speeds of 6.4–9.66 km/hr (4–6 mph) produce the best quality of cut. Ground speed, however, must be reduced when turning because excessive speed will cause the outside mowers to bounce and skip on the turf. Excessive heat, caused by the reel spinning too fast, can also damage the bedknife and reel. Since the grass lubricates the bedknife and reel during operation, slow down when cutting sparse grass, extremely dry grass, or when trimming. Any lack or significant reduction of lubrication produces excessive heat build–up and subsequently, heavy contact between the bedknife and the reel, which results in uneven bedknife wear and poor quality of cut. Therefore, reels must be disengaged and stopped before mowers are transported across parking lots, roads, or whenever the lubrication is minimal.
2. **Height–of–Cut** – To determine the effective height–of–cut, the length of the grass to be cut must be checked. The height–of–cut should be set and the turf mowed frequently so no more than 1/3 of the leaf is cut off. If the mower is equipped with pneumatic tires, pressure must be maintained at 241.3 kpa (35 psi). Low tire pressure can cause bedknife to dip into the grass and scalp the turf. An uneven cut will likely result.
3. **Operating Sound** – A mower that is adjusted correctly gives off a whispering sound when operated. If there are buzzing, clicking, or metallic sounds, the mower has probably been operated with heavy contact between the bedknife and the reel. The reel or bedknife could also have hit a foreign object. A noisy mower must be stopped, repaired, and adjusted or severe damage will result.
4. **Mowing Pattern** – To prevent grass from lying down and improved appearance of the turf, alternate mowing directions if possible, each time an area is cut.

# Causes of Poor Quality of Cut

1. **Bedknife/Reel Contact** (Figure 9) – There must be light contact between the bedknife and the reel to keep the cutting edges sharp and to produce an excellent quality of cut. By contrast, mowers operated without light contact allow abrasive materials and grass to pass between the bedknife and the reel. This eroding action rounds off the bedknife and the reel cutting edges, which results in a poor quality of cut. If the cutting edges become round, the bedknife and the reel must be lapped. Excessive rounding off of the cutting edges may require that the bedknife and the reel be ground and lapped. Never compensate for round cutting edges by tightening the bedknife adjusting knob until there is heavy contact because the bedknife and the reel will wear unevenly and cause "rifling".

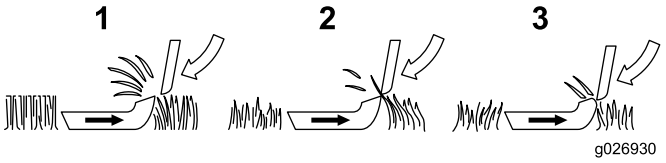


**Figure 9**

1. Sharp edges, light contact
2. No contact, edges get dulled
3. Contact adjustment, dull edges

**Note:** Rifling is the uneven or wavy condition that develops on the bedknife and the reel when there is heavy contact between these two parts (Figure 10). Streaks of uncut grass and an overall poor quality of cut are signs of rifling. Grinding the bedknife and reel is the only way to repair a rifled mower.

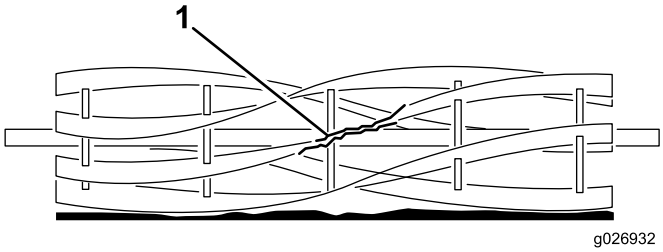


**Figure 10**

1. Nicked reel blades

2. **Noise** – A mower that has sharp cutting edges and is adjusted with light contact will emit a desirable whispering sound when the reel is spinning. By contrast, buzzing, clicking, or metallic sounds during operation indicate that the mower is probably being operated with heavy contact between the bedknife and the reel. Heavy contact causes uneven or wavy wear on the bedknife and reel cutting edges. Grinding is required to repair a damaged bedknife and reel. Although the bedknife and reel are adjusted correctly for light contact, notches will eventually develop at both ends of the bedknife. These notches must be rounded off or filed flush with cutting edge of bedknife to assure smooth operation.
3. **Loose Reel Bearings** – If reel bearings are suspected to be loose, check them immediately or extensive damage may result; refer to Reel Bearing Adjustment.
4. **Hitting a Foreign Object** – The bedknife and the reel cutting edges can be damaged if a foreign object is hit. The damage, if it is not too severe, can be repaired in the field. Start by filing down high spots on the bedknife and the reel (Figure 11). Use a ball peen hammer to straighten any reel blades that may be bent. Since the bedknife usually springs away from the reel upon impact, the bedknife must be adjusted; refer to Parallel the Bedknife to the Reel.

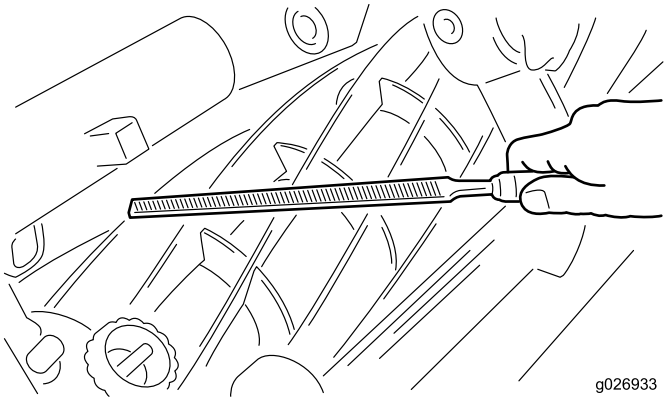


**Figure 11**

# Maintenance

## Lubrication

### Greasing the mower

Each mower has (4) grease fittings (Figure 12) that must be lubricated every 8 hours of operation with Heavy Duty 2 wheel bearing grease.

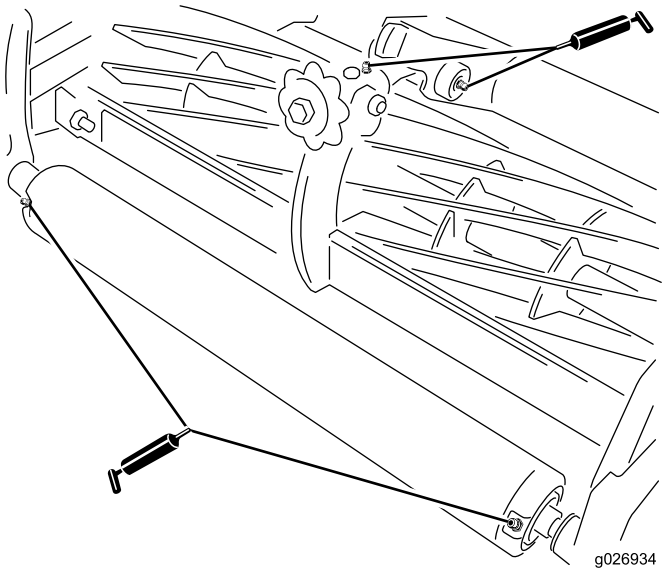


**Figure 12**

**Note: Do not use high pressure hose to clean areas where there are seals or bearings because foreign matter will likely be forced into the bearing. The result will be rapid seal and bearing deterioration. Lubricating the mower immediately after washing helps purge water out of bearings and increases bearing life.**

1. Wipe each grease fitting with a clean rag.
2. Apply the grease. When pressure is felt while greasing the roller, the bearing cavity between the seals is full.

   **Important: Do not continue to grease because the inner bearing seal may get damaged.**
3. Wipe excess grease away.

### Changing the Gear Case Lubricant

The gear cases have been fully lubricated at the factory. Once each season, drain and clean the right and left gear cases. When the gear cases are clean, add SAE 140 gear lube; refer to Checking the Gear Case Oil.

## Adjusting the Reel Bearings

If end play is evident in the reel or if the mower has been disassembled, an adjustment to the reel bearing may be necessary.

1. Remove the (4) screws securing the left wheel to the wheel hub and remove the wheel. Place the wheel under the gear case for support.
2. Raise and block the back of the mower until there is 0.178 to 0.203 m (7 to 8 inches) between the bottom of the gear case extending behind the roller bracket and the level surface.
3. Remove the (3) capscrews securing the inspection cover to the gear case cover.
4. In small increments, rotate the adjusting nut on the reel shaft, in the clockwise direction to remove all end play from the reel. Make sure to hold the reel so it cannot rotate.
5. When the end play is removed, rotate the nut an additional 1/4 turn to preload the bearing.
6. Reinstall the inspection cover and the wheel..

## Grinding

**Note:** For detailed sharpening information, refer to the Toro Manual for Sharpening Reel and Rotary Mowers, Form No. 09168SL.

New and old bedknives should be ground attached to the bedbar; this ensures rigidity during grinding and insures a true knife. Refer to Figure 13 when grinding the knives and obtain as near as possible the relief angles indicated. In grinding, avoid a hard contact between knife and grinding wheel. If hard contact occurs, excessive heat buildup will take place, causing premature wearing of the grinding wheel and reduced life of the knife.

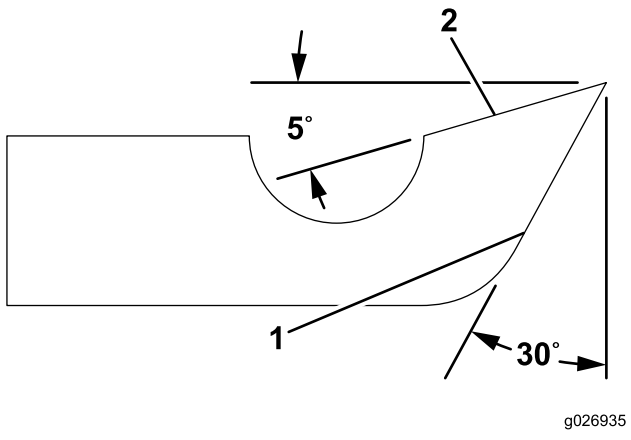


**Figure 13**

1. Front face
2. Cutting face

The land area and relief angle of the reel blade are pointed out in Figure 14. The land area is the part of the reel blade that actually comes in contact with the bedknife and cuts the grass in a scissors action. The relief or back grind angle is ground into the reel blade to provide clearance or relief behind the contacting edges to reduce drag or friction. The recommended relief angle is 15 degrees.

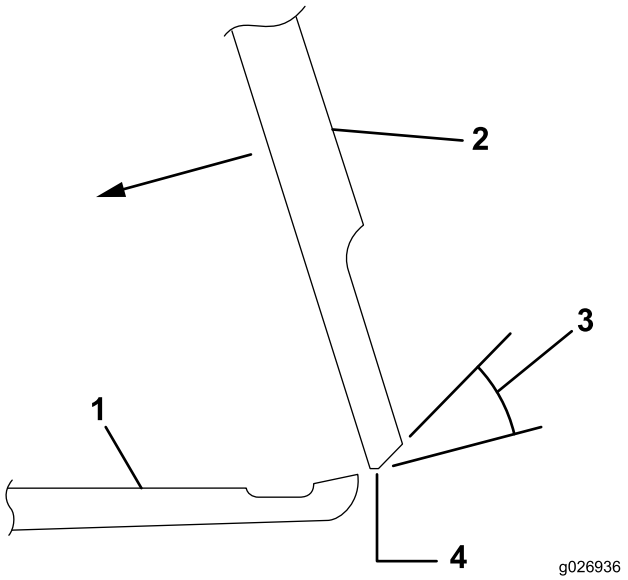


**Figure 14**

1. Bed knife
2. Reel blade
3. 15 - 20 degrees relief angle
4. Land area established by lapping

**Note:** After a reel has run for an extended period of time the blade contact point or land area will keep getting wider and eventually will be the full blade width. This is normal and does not mean that the reel has to be reground to stay effective. A cutting unit can cut effectively with full width blades if the adjustment is checked frequently to maintain sharp cutting edges.

After the reel and bedknife have been ground, perform the following adjustments:

1. Set the Height–of–Cut
2. Parallel the Bedknife to the Reel

   **Note:** As the reel blades continue to run against the bedknife a slight burr will appear on the front cutting edge surface the full length of the bedknife. If a file is occasionally run across the front edge to remove this burr, improved cutting can be obtained.

   If the reel blade edges and the bedknife edge are slightly rounded and do not have severe nicks, lapping only with a lapping compound may restore the edges and match. Oftentimes a mower is deemed by users to need grinding when the reel bearing adjustment, bedknife adjustment and/or lapping is all that is necessary.

# Lapping

Mowers are set up for lapping as follows:

1. Remove the right hand wheel.
2. Place the wheel under the gear case for support.
3. Remove the reel pinion cover (Figure 15).

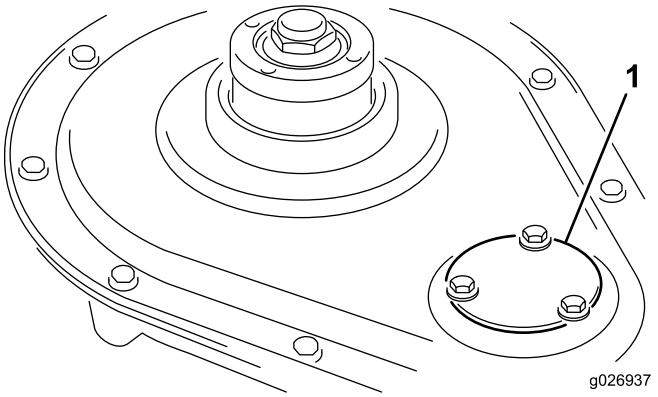


**Figure 15**

1. Reel pinion cover

4. Disengage the reel.
5. Connect the lapping machine coupler to the nut on the end of the reel shaft.

   When lapping, use a good grade of commercial lapping compound. A medium grit should be for initial lapping and a fine grit for finishing. A solution of one part liquid detergent and two parts lapping compound is recommended. The liquid detergent greatly eases washing away the compound when finished. Water soluble oil may also be used as a compound carrier.

   **Note:** The lapping solution must be kept in free flowing condition to get even distribution on the bedknife and reel.

   The lapping procedure is as follows:

1. Adjust the bedknife to the reel so light contact is evident.
2. Operate the lapping machine so the reel turns in a reverse direction. Apply lapping solution continuously and maintain light bedknife to reel contact.
3. Stop the lapping machine periodically to check the cutting surfaces for sharpness. Continue lapping until the sharp cutting edges have been restored.

   **Note:** If the cutting edges are severely rounded, both sharpening and lapping may be required.

4. Wash off all the lapping solution. Using paper, check for sharpness along the entire length of each reel blade. If the paper cannot be cut cleanly along the entire length of each reel blade, continued lapping is necessary.

# Replacing the Bedknife

1. To replace the bedknife, remove the eleven (11) screws holding the knife to the bed bar; replace the knife and reinstall the screws. All screws should be lubricated with oil and torqued to 28.3 – 33.9 N-m (250–300 in.–lb). The screws should be tightened by starting at the center of the bedknife and alternating until all the screws are secured.

2. True the bedknife attached to the bedbar by grinding. Refer to the Toro Manual for Sharpening Reel and Rotary Mowers, Form No. 09168SL
3. After the bedknife has been ground and is "true", perform the following adjustments:

# Adjusting the Reel, Roller and Wheel Bearing

After the initial 30 operating hours, check the reel bearing, roller bearing, and wheel bearing. Thereafter, check these parts every 200–250 operating hours. If necessary, adjust the reel bearing. If necessary, adjust the roller bearing. If necessary, adjust the wheel bearing.

# Servicing the Roller

## Disassembly

1. Remove the brackets and washers from each end of the roller and inspect the bushings.
2. Remove elastic stop nut.

   **Note:** After the elastic stop nut has been removed, slide the sleeve off the roller shaft. Point the end of roller downward into a container, at the same time pulling the roller shaft out, allowing lubricant to drain from the roller.
3. If the roller shaft is to be replaced, remove the double jam nuts.
4. Remove the remaining sleeve and seals from both ends of the roller.
5. Remove the bearing cones from each end of the roller.
6. Remove the bearing cups with caution.
7. Remove the inner seals by using a seal remover

## Assembly

1. Lightly oil the lips of the inner seals. Install the inner seals on each end of the roller, making sure that the garter springs face inboard.
2. Replace the bearing cups and insert the bearing cones into the roller.
3. Lightly oil the lips of the outer seals. Install the outer seals on each end of the roller, making sure that the garter springs face inboard.
4. Slide one (1) sleeve onto the roller shaft against the double jam nuts.
5. Wrap the threaded area of the roller shaft with cellophane tape to protect the seals, and carefully slide the shaft through the right–hand side of the roller. Slide the roller shaft into the roller until it penetrates the inner most oil seal on the right–hand side.
6. Pour approximately 0.0296 liter (16 ounces) of SAE 90 or 140 gear oil into the roller housing.
7. After the oil has been added, carefully push the roller shaft through the entire roller assembly. Remove the cellophane tape.
8. Install the sleeve onto the roller shaft and slide up against the bearing cone.
9. Install the elastic stop nut and secure it by holding the double jam nuts. Tighten the elastic stop nut.

   **Note:** Tighten the elastic stop nut until all axial and radial motion has been removed from the roller shaft and bearings. Ensure that the roller rotates freely on the shaft.
10. Grease the bearings with Heavy Duty 2 wheel bearing grease.
11. Reinstall the washers and install the left and right–hand bracket and the bushing assemblies.

    **Important: After the mower has been completely assembled, perform the following critical adjustments:**

    A. Check the Reel Bearings and the Mower Fasteners.

    B. Set the Height–of–Cut

    C. Parallel the Bedknife to the Reel

# Notes:

# Declaration of Incorporation

The Toro Company, 8111 Lyndale Ave. South, Bloomington, MN, USA declares that the following unit(s) conform(s) to the directives listed, when installed in accordance with the accompanying instructions onto certain Toro models as indicated on the relevant Declarations of Conformity.

| Model No. | Serial No. | Product Description | Invoice Description | General Description | Directive |
|---|---|---|---|---|---|
| 01005 | 314000001 and Up | Reelmaster 5-Blade Reel Mower | REELMASTER 5 | Reelmaster 5-Blade Reel Mower | 2006/42/EC |
| 01007 | 314000001 and Up | Reelmaster 7-Blade Reel Mower | REELMASTER 7 | Reelmaster 7-Blade Reel Mower | 2006/42/EC |
| 01011 | 314000001 and Up | Reelmaster 11-Blade Reel Mower | REELMASTER 11 | Reelmaster 11-Blade Reel Mower | 2006/42/EC |

Relevant technical documentation has been compiled as required per Part B of Annex VII of 2006/42/EC.

We will undertake to transmit, in response to requests by national authorities, relevant information on this partly completed machinery. The method of transmission shall be electronic transmittal.

This machinery shall not be put into service until incorporated into approved Toro models as indicated on the associated Declaration of Conformity and in accordance with all instructions, whereby it can be declared in conformity with all relevant Directives.

Certified:



David Klis
Sr. Engineering Manager
8111 Lyndale Ave. South
Bloomington, MN 55420, USA
September 26, 2013

EU Technical Contact:

Peter Tetteroo
Toro Europe NV
B-2260 Oevel-Westerloo
Belgium

Tel. 0032 14 562960
Fax 0032 14 581911

# The Toro Total Coverage Guarantee

A Limited Warranty

## Conditions and Products Covered

The Toro Company and its affiliate, Toro Warranty Company, pursuant to an agreement between them, jointly warrant your Toro Commercial product ("Product") to be free from defects in materials or workmanship for two years or 1500 operational hours*, whichever occurs first. This warranty is applicable to all products with the exception of Aerators (refer to separate warranty statements for these products). Where a warrantable condition exists, we will repair the Product at no cost to you including diagnostics, labor, parts, and transportation. This warranty begins on the date the Product is delivered to the original retail purchaser.
* Product equipped with an hour meter.

## Instructions for Obtaining Warranty Service

You are responsible for notifying the Commercial Products Distributor or Authorized Commercial Products Dealer from whom you purchased the Product as soon as you believe a warrantable condition exists. If you need help locating a Commercial Products Distributor or Authorized Dealer, or if you have questions regarding your warranty rights or responsibilities, you may contact us at:

Toro Commercial Products Service Department
Toro Warranty Company
8111 Lyndale Avenue South
Bloomington, MN 55420-1196

952–888–8801 or 800–952–2740
E-mail: commercial.warranty@toro.com

## Owner Responsibilities

As the Product owner, you are responsible for required maintenance and adjustments stated in your *Operator's Manual*. Failure to perform required maintenance and adjustments can be grounds for disallowing a warranty claim.

## Items and Conditions Not Covered

Not all product failures or malfunctions that occur during the warranty period are defects in materials or workmanship. This warranty does not cover the following:

- Product failures which result from the use of non-Toro replacement parts, or from installation and use of add-on, or modified non-Toro branded accessories and products. A separate warranty may be provided by the manufacturer of these items.
- Product failures which result from failure to perform recommended maintenance and/or adjustments. Failure to properly maintain your Toro product per the Recommended Maintenance listed in the *Operator's Manual* can result in claims for warranty being denied.
- Product failures which result from operating the Product in an abusive, negligent, or reckless manner.
- Parts subject to consumption through use unless found to be defective. Examples of parts which are consumed, or used up, during normal Product operation include, but are not limited to, brake pads and linings, clutch linings, blades, reels, rollers and bearings (sealed or greasable), bed knives, spark plugs, castor wheels and bearings, tires, filters, belts, and certain sprayer components such as diaphragms, nozzles, and check valves, etc.
- Failures caused by outside influence. Conditions considered to be outside influence include, but are not limited to, weather, storage practices, contamination, use of unapproved fuels, coolants, lubricants, additives, fertilizers, water, or chemicals, etc.
- Failure or performance issues due to the use of fuels (e.g. gasoline, diesel, or biodiesel) that do not conform to their respective industry standards.
- Normal noise, vibration, wear and tear, and deterioration.
- Normal "wear and tear" includes, but is not limited to, damage to seats due to wear or abrasion, worn painted surfaces, scratched decals or windows, etc.

## Parts

Parts scheduled for replacement as required maintenance are warranted for the period of time up to the scheduled replacement time for that part. Parts replaced under this warranty are covered for the duration of the original product warranty and become the property of Toro. Toro will make the final decision whether to repair any existing part or assembly or replace it. Toro may use remanufactured parts for warranty repairs.

## Deep Cycle and Lithium-Ion Battery Warranty:

Deep cycle and Lithium-Ion batteries have a specified total number of kilowatt-hours they can deliver during their lifetime. Operating, recharging, and maintenance techniques can extend or reduce total battery life. As the batteries in this product are consumed, the amount of useful work between charging intervals will slowly decrease until the battery is completely worn out. Replacement of worn out batteries, due to normal consumption, is the responsibility of the product owner. Battery replacement may be required during the normal product warranty period at owner's expense. Note: (Lithium-Ion battery only): A Lithium-Ion battery has a part only prorated warranty beginning year 3 through year 5 based on the time in service and kilowatt hours used. Refer to the *Operator's Manual* for additional information.

## Maintenance is at Owner's Expense

Engine tune-up, lubrication, cleaning and polishing, replacement of filters, coolant, and completing recommended maintenance are some of the normal services Toro products require that are at the owner's expense.

## General Conditions

Repair by an Authorized Toro Distributor or Dealer is your sole remedy under this warranty.

**Neither The Toro Company nor Toro Warranty Company is liable for indirect, incidental or consequential damages in connection with the use of the Toro Products covered by this warranty, including any cost or expense of providing substitute equipment or service during reasonable periods of malfunction or non-use pending completion of repairs under this warranty. Except for the Emissions warranty referenced below, if applicable, there is no other express warranty. All implied warranties of merchantability and fitness for use are limited to the duration of this express warranty.**

Some states do not allow exclusions of incidental or consequential damages, or limitations on how long an implied warranty lasts, so the above exclusions and limitations may not apply to you. This warranty gives you specific legal rights, and you may also have other rights which vary from state to state.

## Note regarding engine warranty:

The Emissions Control System on your Product may be covered by a separate warranty meeting requirements established by the U.S. Environmental Protection Agency (EPA) and/or the California Air Resources Board (CARB). The hour limitations set forth above do not apply to the Emissions Control System Warranty. Refer to the Engine Emission Control Warranty Statement supplied with your product or contained in the engine manufacturer's documentation for details

## Countries Other than the United States or Canada

Customers who have purchased Toro products exported from the United States or Canada should contact their Toro Distributor (Dealer) to obtain guarantee policies for your country, province, or state. If for any reason you are dissatisfied with your Distributor's service or have difficulty obtaining guarantee information, contact the Toro importer.

374-0253 Rev B