Form No. 3387-783 Rev A

TORO®

Count on it.

Parts Catalog

55cm Recycler® Lawn Mower

Model No. 20955—Serial No. 315000001 and Up

Register at www.Toro.com.
Original Instructions (EN)

CE

3387-783 A

Ordering Replacement Parts

To order replacement parts, please supply the part number, the quantity, and the description of each part desired.

Understanding Reference Numbers

Each identified part in an illustration has a reference number. The reference number for a part also appears in the parts list, along with other information about the part.

This catalog uses two special reference number formats, one to indicate parts in a service assembly and another to indicate the quantity of a given part in an illustration.

Service Assembly Reference Numbers

Parts in service assemblies have reference numbers in the form a:b. The a represents the reference number of the entire service assembly and the b represents a sequential number unique to each part within the service assembly.

For example, a wheel assembly might be identified by reference number 6, the tire by 6:1, the valve by 6:2, and the wheel by 6:3. When you order the assembly identified by reference number 6, you receive all parts identified by reference numbers 6:1,6:2, and 6:3. However, you may also order any part individually. Reference numbers of this type appear in illustration and in parts lists.

Reference Numbers Indicating Quantity

In an illustration, if a reference number indicates more than one part, the reference number has the form nX y. The n represents the quantity of the part, the X is the multiplication symbol, and the y represents the reference number.

For example, in an illustration, the reference number 2X 37 means that two of the parts identified by reference number 37 are indicated.

List of Abbreviations

AR: as required

ASM: assembly

BBC: blade brake control

BHTF: button head thread forming

CARR: carriage

CCW: counter clockwise

CW: clockwise

DEG: degrees

DPA: Dual Point Adjustment

ECM: electronic control module

EXT: external

FH: flat head

GA: gauge

HD: heavy-duty

HF: hex flange

HH: hex head

HHF: hex head flange

HHFTF: hex head flange thread forming

HJ: hex jam

HLH: hex lag head

HOC: height-of-cut

HP: high pressure

HSBH: hex socket button head

HSFH: hex socket flat head

HSH: hex socket head

HWH: hex washer head

HWHTF: hex washer head thread forming

HYD: hydraulic

LH: left hand

LP: low pressure

LPG: Liquefied Petroleum Gas

NI: nylon insert

NPTF: national pipe thread fine

PFH: phillips flat head

PPH: phillips pan head

PPHTF: phillips pan head thread forming

PRH: phillips round head

PTH: phillips truss head

PTO: power-take-off

RH: right hand

ROPS: roll-over protection system

RRB: rear roller brush

SFH: slotted fillister head

SHH: slotted hex head

SHWH: slotted hex washer head

SPH: slotted pan head

SQH: square head

SRH: slotted round head

STD: standard

TAP: self tapping

TTH: torx truss head

Contents

Deck, Side Chute and Rear Door Assembly 4
Rear Bag Assembly 6
Engine and Blade Assembly 8
Front Wheel and Height-of-Cut Assembly 10
Transmission and Rear Wheel Drive Assembly 12
Handle Assembly 14
Attachments and Accessories 16

© 2014—The Toro® Company
8111 Lyndale Avenue South
Bloomington, MN 55420

Contact us at www.Toro.com.
Printed in the USA.
All Rights Reserved

Deck, Side Chute and Rear Door Assembly

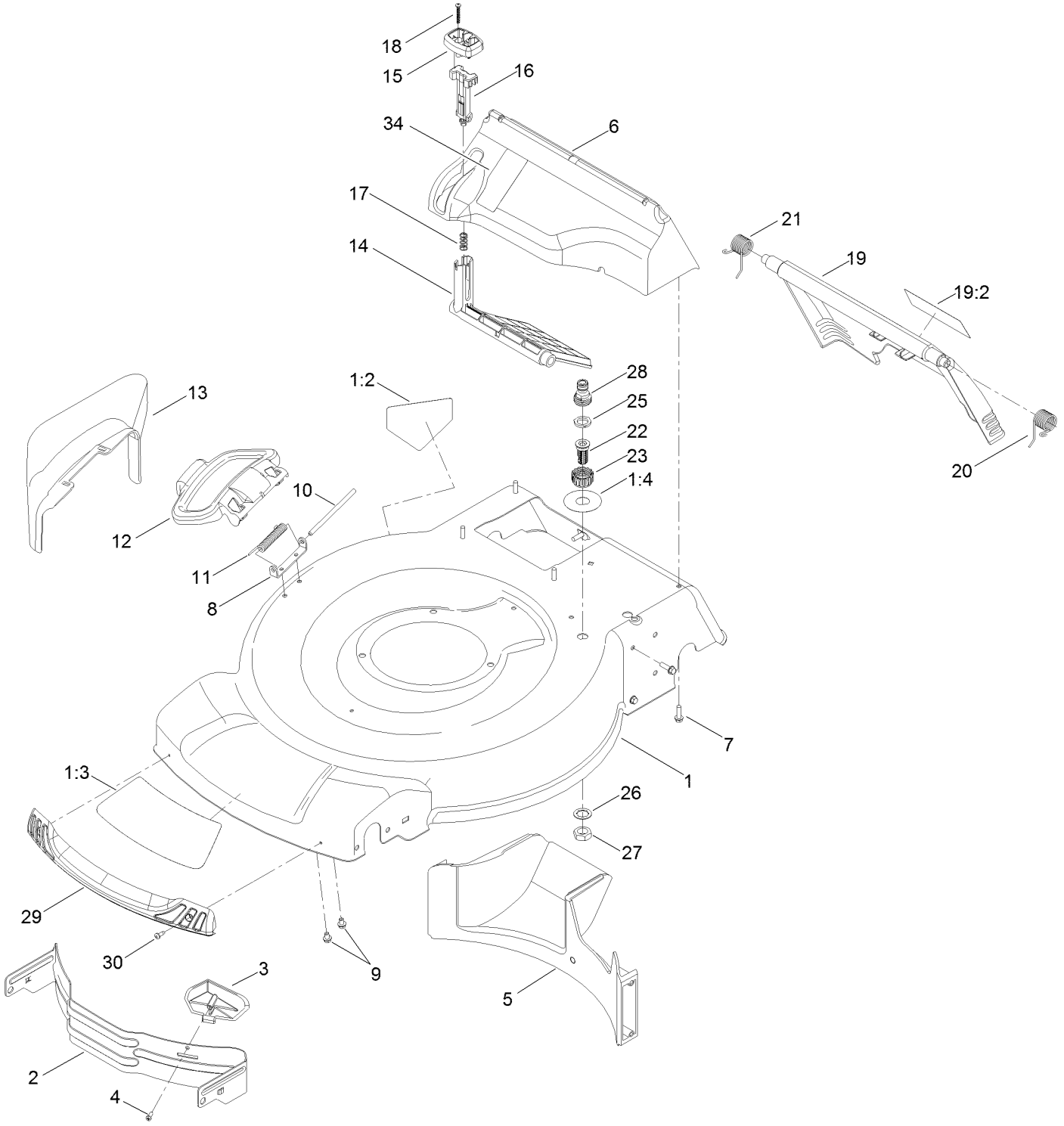

Deck, Side Chute and Rear Door Assembly (continued)

Ref.	Part Number	Qty.	Description
1	130-2390	1	Housing ASM
1:2	112-8760	1	Decal-Danger
1:3	119-0283	1	Decal-Recycler
1:4	112-8867	1	Decal-Washout Port
2	115-4667-01	1	Baffle-Front
3	115-4672	1	Kicker-Front
4	32144-111	1	Screw-PPH
5	114-7961	1	Baffle-Rear
6	115-4677	1	Chute-Recycle
7	46-8091	9	Screw-HWH
8	112-6416	1	Bracket-Cover
9	99-8445	2	Screw-HWH
10	99-5291	1	Rod-Cover
11	99-5293	1	Spring-Torsion
12	115-8449	1	Deflector-Side
13	115-8447	1	Chute-Discharge, Side
14	114-7960	1	Deflector-Recycle
15	114-7958	1	Knob-Recycle
16	114-7959	1	Latch-Recycle
17	117-1031	1	Spring-Compression
18	32104-120	2	Screw-PPH
19	121-5776	1	Rear Door ASM
19:2	131-4514	1	Decal-Warning
20	115-2859	1	Spring-Torsion
21	114-7924	1	Spring-Torsion
22	112-6400	1	Port-Washout
23	112-6401	1	Coupling-Hose, Washout Port
25	112-6438	1	Washer-Seal, Washout Port
26	3254-5	1	Washer-Tooth, Internal
27	3218-6	1	Nut-Jam
28	112-6437	1	Adapter-Connect, Quick
29	114-7987	1	Bumper
30	105-6849	2	Screw-Thread Forming
34	125-5026	1	Decal-Bag On Demand

Rear Bag Assembly

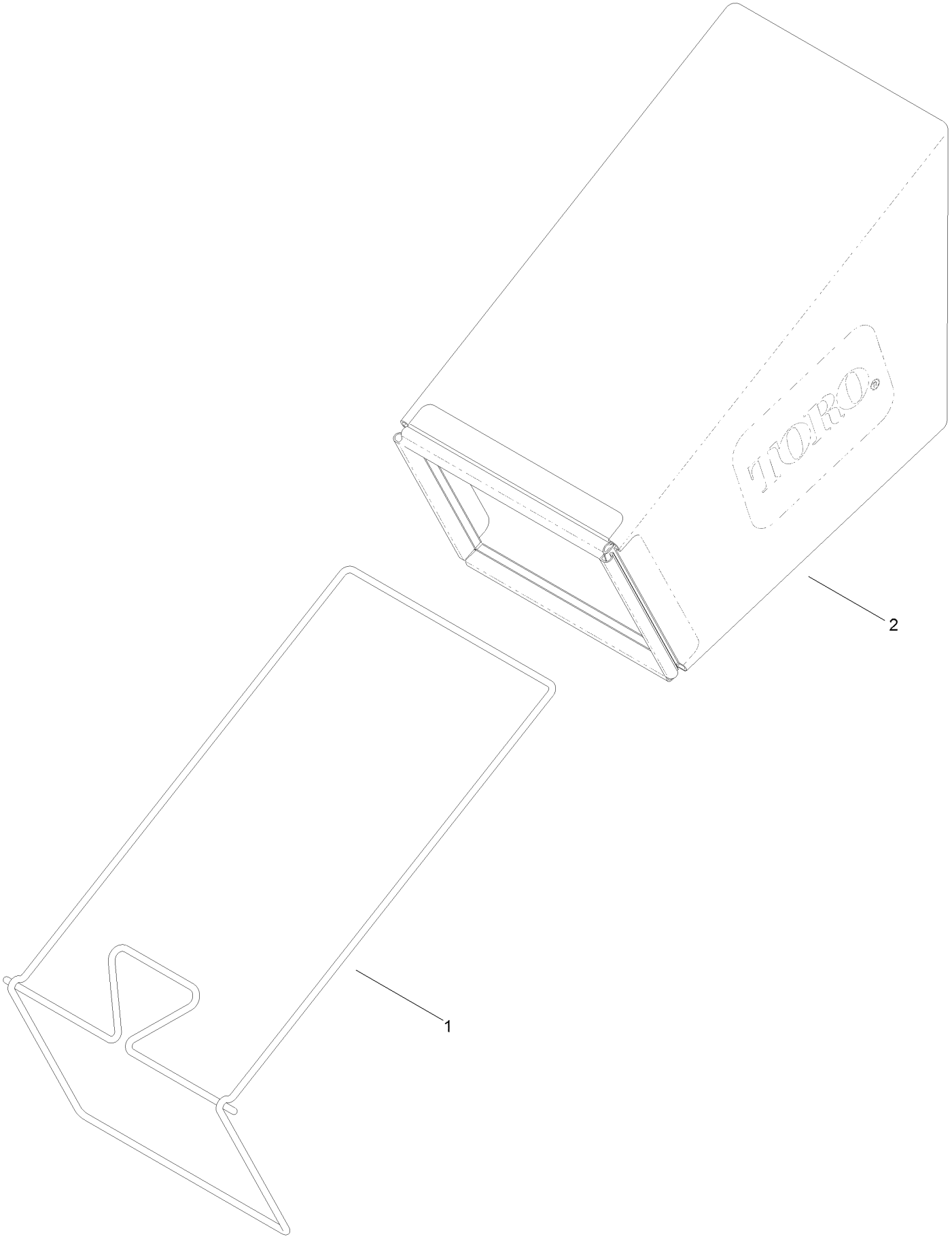

Rear Bag Assembly (continued)

Ref.	*Part Number*	*Qty.*	*Description*
1	114-2679-03	1	Frame-Bag
2	115-4673	1	Grass Bag ASM

Engine and Blade Assembly

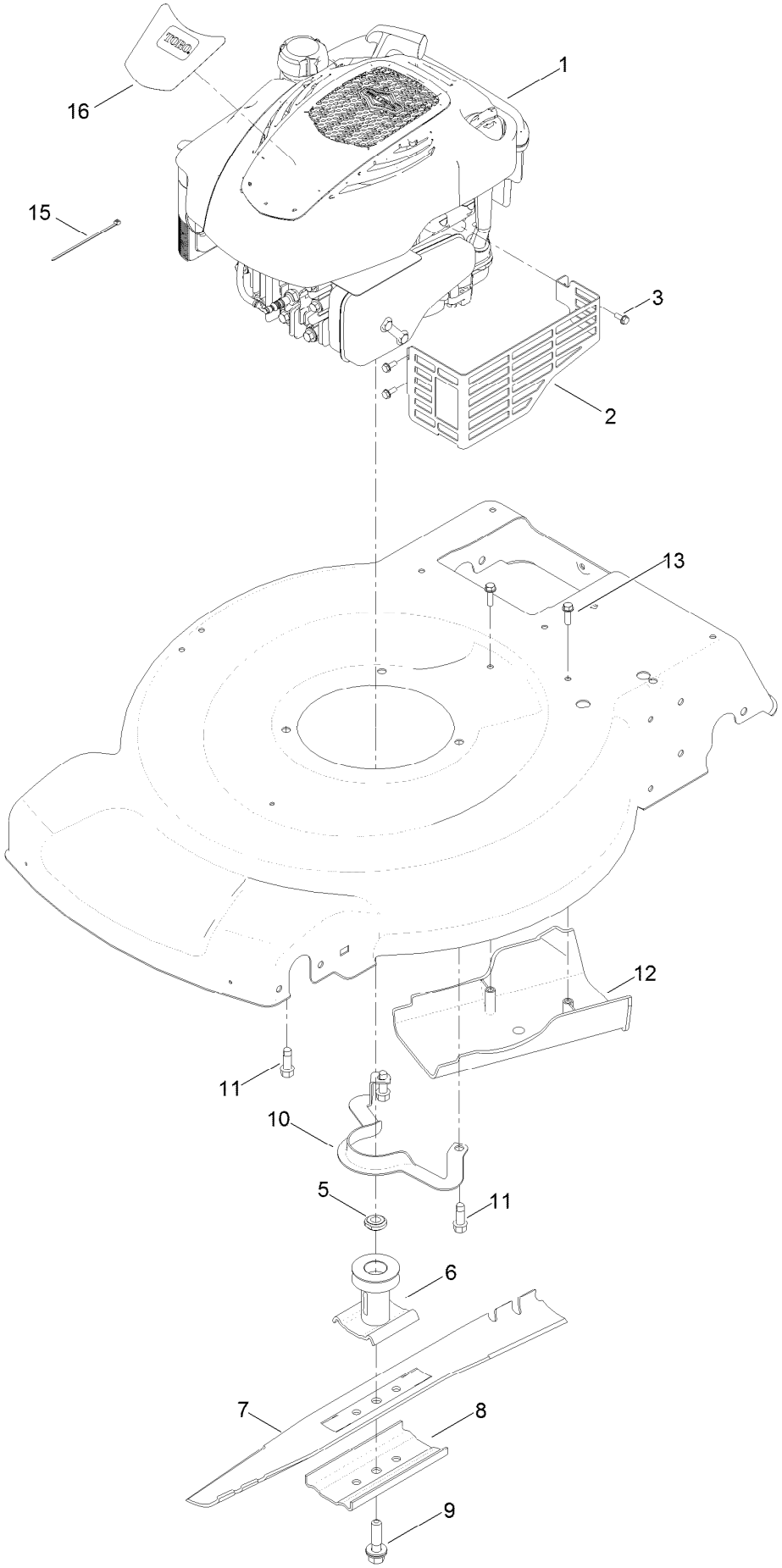

Engine and Blade Assembly (continued)

Ref.	Part Number	Qty.	Description
1		1	Engine-Briggs 126M020119F1 ●■
2	104-7577-03	1	Shield-Muffler
3	32144-1	3	Screw-Taptite
5	106-3999	1	Spacer-Driver
6	106-3987	1	Driver-Blade
7	108-9783-03	1	Blade
8	105-6848-03	1	Accelerator-Blade
9	125-2466	1	Bolt-Blade
10	105-3030-03	1	Guide-Belt
11	95-1726	3	Screw-Taptite
12	114-7937	1	Cover-Belt
13	46-8091	2	Screw-HWH
15	110-7409	1	Tie-Cable, Motor
16	120-1935	1	Decal-Shroud

● Not serviced separately

■ Obtain parts from www.briggsandstratton.com

Front Wheel and Height-of-Cut Assembly

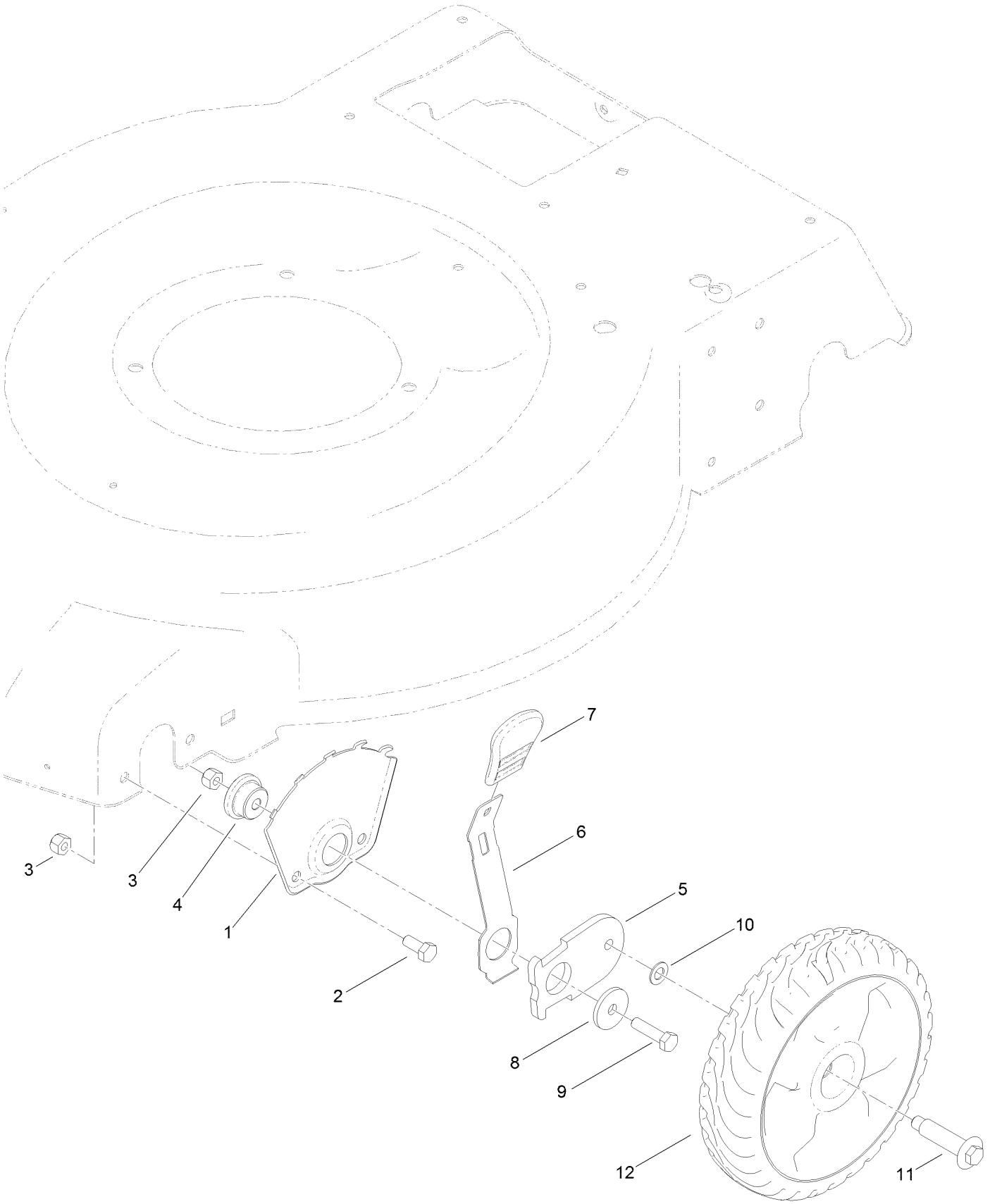

Front Wheel and Height-of-Cut Assembly (continued)

Ref.	Part Number	Qty.	Description
1	115-1956-03	2	Plate-HOC, Front
2	322-3	4	Screw-HH
3	3296-29	6	Nut-Lock, NI
4	105-1818	2	Bushing-Mount, HOC
5	105-1807	2	Arm-Pivot, Front
6	105-1809	2	Arm-Spring
7	110-0549	2	Knob-HOC
8	105-3048	2	Washer-Flat
9	322-6	2	Screw-HH
10	40-1940	2	Washer
11	614650	2	Bolt-Shoulder
12	115-2894	2	8 Inch Wheel ASM

Transmission and Rear Wheel Drive Assembly

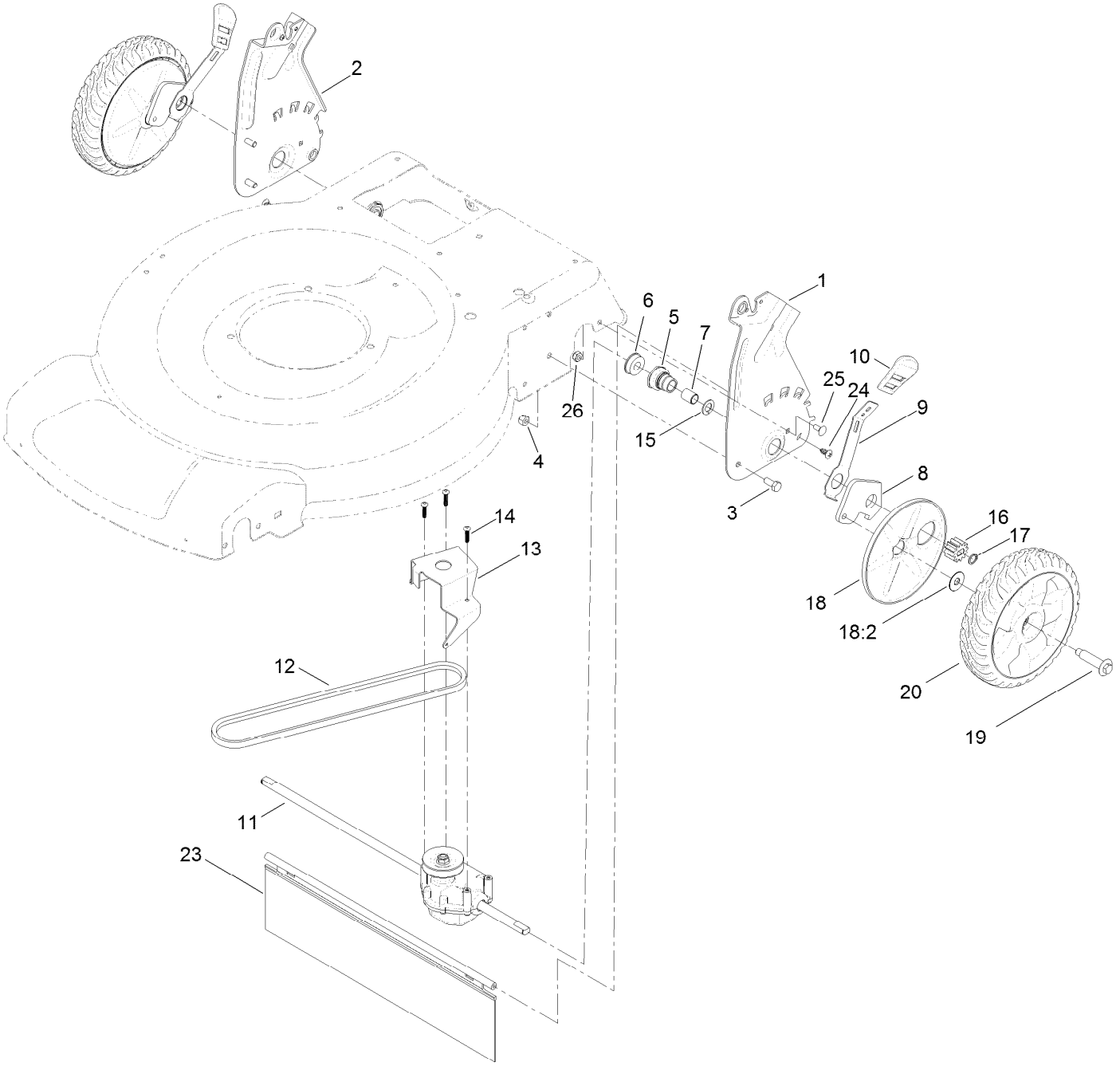

Transmission and Rear Wheel Drive Assembly (continued)

Ref.	Part Number	Qty.	Description
1	127-6877-03	1	Plate-Rear, LH (HOC)
2	127-6878-03	1	Plate-Rear, RH (HOC)
3	322-3	4	Screw-HH
4	3296-29	4	Nut-Lock, NI
5	108-9779	2	Retainer-Bushing, HOC
6	104-8699	2	Bearing-Ball
7	108-9782	2	Bushing-Sleeve
8	108-9781	2	Arm-Pivot, Rear
9	108-9780	2	Arm-Spring
10	110-0549	2	Knob-HOC
11	121-9178	1	Transmission
12	115-4669	1	Belt-V
13	114-7977-03	1	Bracket-Transmission
14	108-7476	3	Screw-Plastite
15	110-7191	2	Washer-Thrust
16	110-9417	2	Gear-Pinion, 15T
17	32151-61	2	Ring-Retaining
18	110-1792	2	Wheel Cover ASM
18:2	614426	1	Washer-Stepped
19	614650	2	Bolt-Shoulder
20	119-3822	2	8 Inch Wheel Gear ASM
23	120-7012	1	Shield-Trailing
24	117-1092	2	Screw-PTH
25	3229-11	2	Screw-CARR
26	3296-16	2	Nut-Lock, NI

Handle Assembly

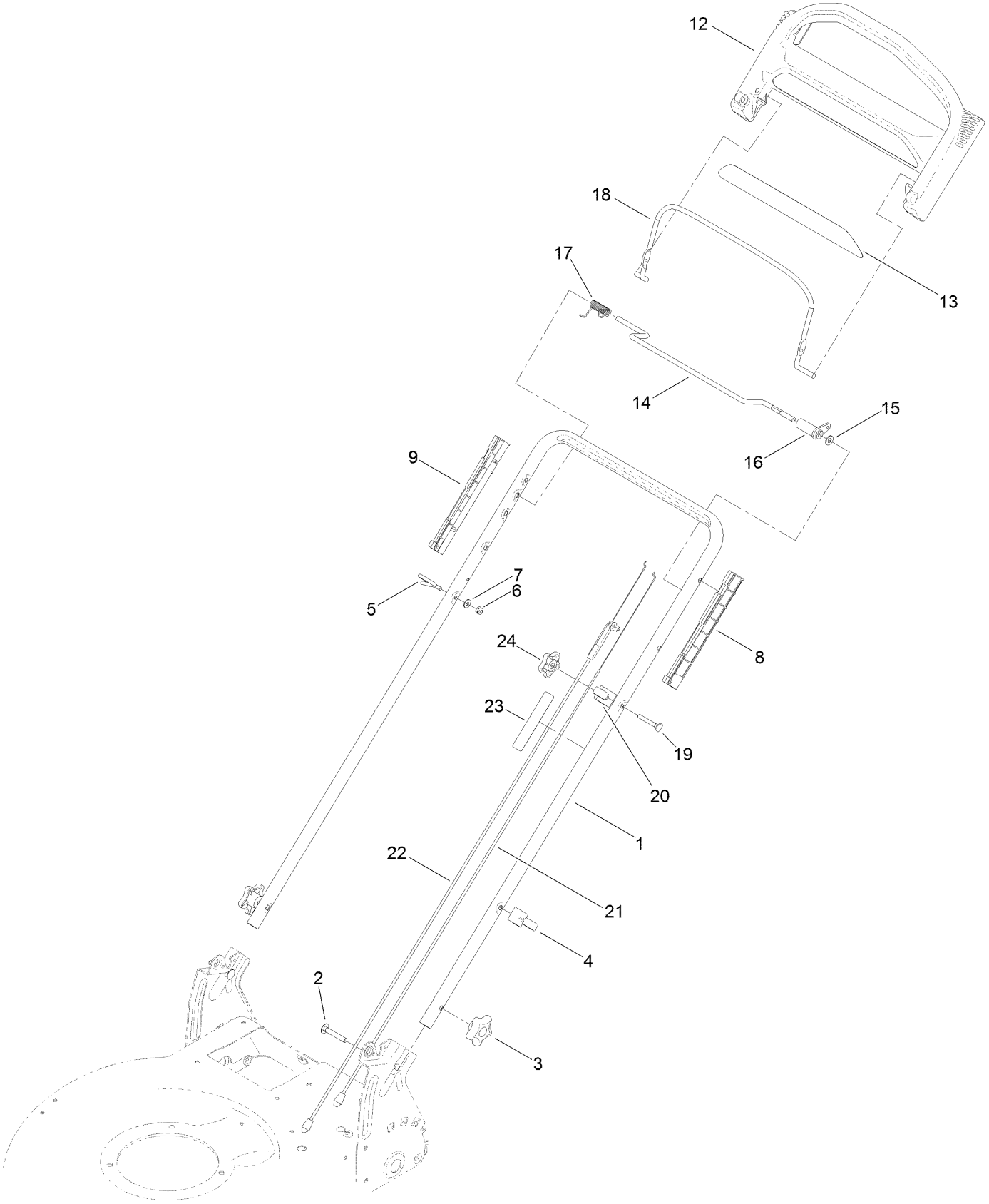

Handle Assembly (continued)

Ref.	Part Number	Qty.	Description
1	119-3810-05	1	Handle
2	3230-6	2	Screw-CARR
3	117-5976	2	Knob-Handle
4	114-7988	1	Guide-Cable
5	86-9671	1	Guide-Rope
6	3296-73	2	Nut-Lock, NI
7	3256-1	1	Washer-Flat
8	105-6842	1	Guide-LH
9	105-6841	1	Guide-RH
12	104-8678	1	Handle-Control
13	120-3911	1	Decal-Handle
14	99-1588	1	Bar-Control, Traction
15	3256-23	1	Washer-Flat
16	99-1589	1	Lever-Traction
17	121-9118	1	Spring-Torsion
18	104-8679-03	1	Bail-Brake
19	95-4453	1	Screw
20	99-5239	1	Anchor-Cable
21	115-8435	1	Cable-Traction
22	115-8437	1	Cable-Brake
23	131-0894	1	Decal-Traction, Adjust
24	131-0897	1	Knob-Handle, Locking

Attachments and Accessories

For 20955 55cm Recycler Lawn Mower

Product Name	Model/Part
Traction Assist Handle Kit	108-8120
Replacement Bag	59310
Replacement Frame and Bag Kit	59312
22in Atomic Blade	59534P

Notes:

Notes:

Notes:



Count on it.