Form No. 3387-879 Rev A

TORO®

Count on it.

Parts Catalog

CE Guard Kit

Greensmaster® 3420 TriFlex™ Traction Unit

Model No. 04443

Register at www.Toro.com.
Original Instructions (EN)

CE

3387-879 A

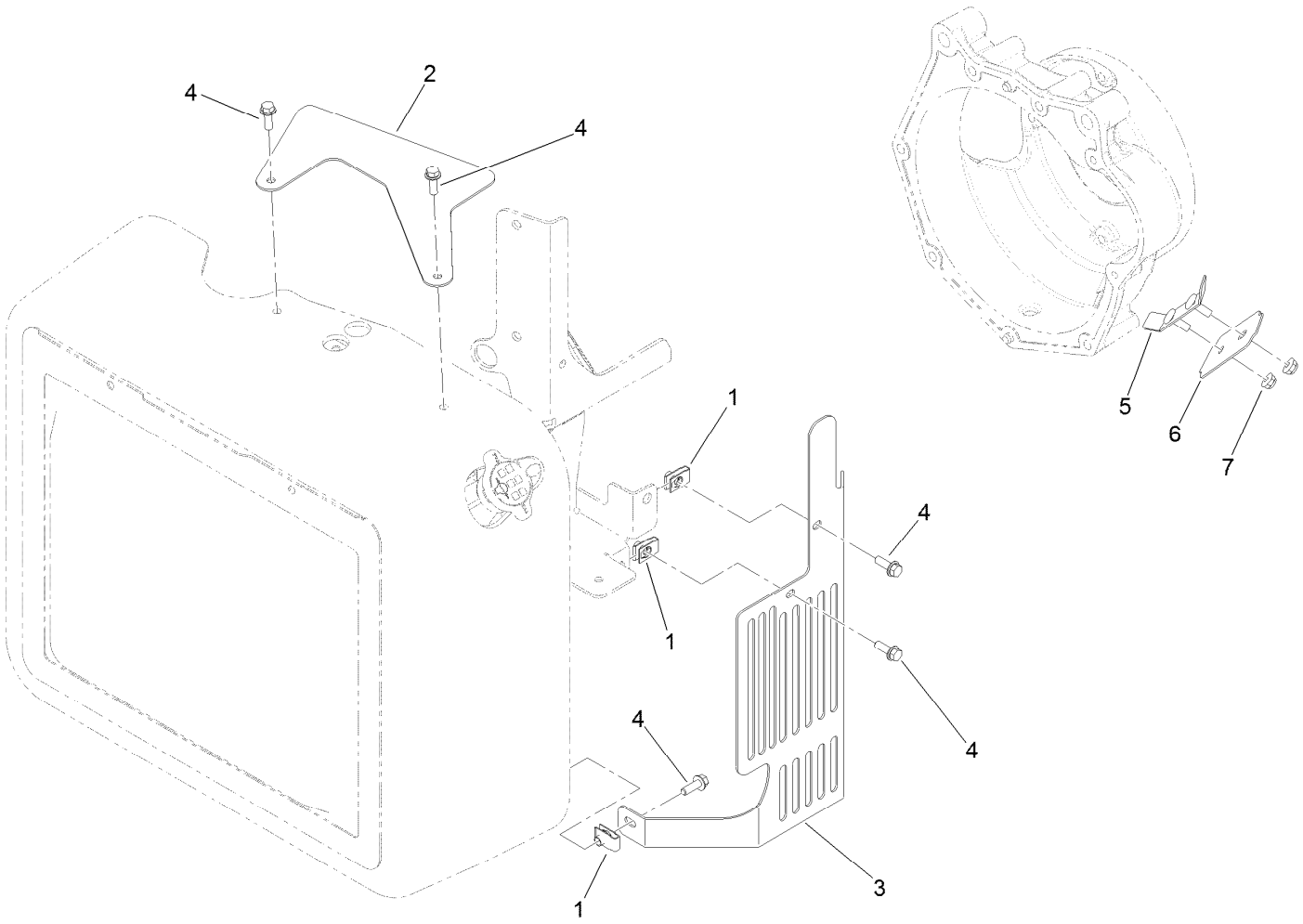

Guard Kit Assembly

Ref.	*Part Number*	*Qty.*	*Description*
1	107069	3	Clip
2	131-2092-01	1	Guard-Radiator, Upper
3	131-2094-03	1	Guard-Rear
4	115-5103	5	Screw-HHF
5	131-2093	1	Guard-Inner
6	131-2091	1	Guard-Outter
7	104-7201	2	Nut-HF