FORM NO. 3312-561

TORO®

MODEL NO. 58402 — 5000001 & UP

OPERATOR'S MANUAL

2 hp EDGER

⚠ SAFETY INSTRUCTIONS

This edger "meets or exceeds U.L. requirements for gasoline-powered edgers." However, improper use or maintenance by the operator or owner can result in injury. To reduce the potential for injury, comply with these safety instructions and always pay attention to the safety alert symbol. Failure to comply with the instruction may result in personal injury. Save these instructions.

BEFORE OPERATING

1. Read this manual carefully before operating the edger. Become thoroughly familiar with the controls and proper use of the edger. Never allow children to operate the edger or adults to operate it without proper instructions. Know how to disengage controls and stop the unit quickly.

2. Keep everyone, especially children and pets, away from the area of operation. Thoroughly inspect area where edger will be used. Remove sticks, stones, wire, bones and any other debris because thrown objects can cause injury.

3. Dress properly by wearing long pants that cover legs, substantial footwear and safety glas or goggles. Sturdy gloves and safety foot ar are recommended. Do not wear loose clothing and jewelry because they could get caught in moving parts. Do not operate edger while wearing open sandals or when barefoot.

4. Check fuel level before starting engine. Do not fill fuel tank indoors, when the engine is running, or until engine cools for several minutes after running. If gasoline is spilled, move edger and gas can away from area and do not create a source of ignition. Wipe up spilled gasoline before starting engine. Always use an approved gas can.

5. Do not use edger unless all guards, shields and safety devices are properly in place. Repair or replace defective or damaged parts before using.

6. Disengage power to blade before starting engine. Assure blade control functions properly before each use of the edger.

WHILE OPERATING

7. Do not run engine indoors because exhaust gases are dangerous.

8. Always maintain secure footing and balance. Keep both hands on handle and walk, never run. Never operate edger on gravel surfaces or steep slopes. Do not edge in the rain or wet locations. Edge only in daylight or in good artificial light.

9. Stay alert, use common sense and always watch what you are doing. Do not operate edger when fatigued or under the influence of alcohol or drugs.

10. Use the edger for only the purpose described in this manual. Do not abuse the edger.

11. Keep face, hands and feet away from the cutter blade. Operate edger from position behind handle where guards block line of sight to blade.

12. Stay clear of discharge area. Never direct discharge of material toward bystanders nor allow anyone near area of operation. Avoid discharging material toward automobiles, glass enclosures and similar things.

13. Stay alert for uneven sidewalks, holes in terrain or other hidden hazards when using edger. Always push slowly over rough ground. When moving from place to place, disengage power to blade.

14. Since blade rotates for a few seconds after blade control is released, stay behind the handle until all moving parts stop.

15. After striking a foreign object or if edger vibrates abnormally, disengage power to blade, wait for blade to stop, and stop engine. Remove wire from spark plug and inspect for damage. Repair before using edger again.

PRICE $1.00

SAFETY INSTRUCTIONS

16. Do not try to remove cut material or hold material to be cut when engine is running or when blade is rotating. Disengage power to blade, stop engine and disconnect wire from spark plug before clearing jammed material from cutter blade and belt area.

17. Before leaving operator's position, disengage power to blade, wait for blade to stop, and stop engine. Disconnect wire from spark plug if edger will be unattended or not used.

18. Do not touch muffler or engine while it is running or shortly after it is stopped because muffler and engine may be hot enough to cause a burn.

19. Perform only those maintenance instructions described in this manual. If major repairs are ever needed or if assistance is desired, contact an Authorized TORO Service Dealer.

MAINTENANCE

20. Before edger is cleaned, inspected, serviced, adjusted or transported, disengage power to blade and wait for blade to stop. Stop engine and disconnect wire from spark plug. Keep wire away from spark plug to prevent accidental starting.

21. To assure edger is in safe operating condition, frequently check and keep all nuts, bolts and screws tight. Assure blade nut is tightened to proper specification.

22. To reduce fire hazard, keep engine free of excessive grease, grass, leaves and accumulations of dirt.

23. Allow engine to cool before storing edger in any enclosure. Do not store edger near any open flame or where gasoline fumes may be ignited by a spark. Do not store edger in a car trunk or truck.

24. Do not overspeed the engine by changing governor settings.

25. When not in use, store edger in a dry place in an area that can be locked or is otherwise inaccessible to children.

26. At the time of manufacture the edger conformed to the safety standards in effect for edgers. To assure optimum performance and continued safety certification of the edger, use genuine TORO replacement parts and accessories. Replacement parts and accessories made by other manufacturers may result in non-conformance with the safety standards, and that could be dangerous.

SAFETY DECALS

Safety decals and instructions are easily visible to the operator and are located near any area of potential danger. Replace any decal that is damaged.

⚠WARNING: ◀DIRECTION OF CUTTING MEMBER ROTATION.
⚠ CAUTION: TO REDUCE THE LIKELIHOOD OF CONTACT WITH CUTTING MEMBER, STAY AWAY FROM THIS OPENING.

ON LOWER HANDLE
(Part No. 52-0570)

OPERATING INSTRUCTIONS
TO START: TURN ENGINE SWITCH TO "ON" POSITION.
ROTATE CHOKE LEVER IN DIRECTION OF ARROW.
PULL RECOIL. RETURN CHOKE LEVER AFTER STARTING.
TO STOP: RETURN ENGINE SWITCH TO "OFF" POSITION.

ON ENGINE
(Part No. 52-3380)

⚠WARNING
USE EYE PROTECTION. ROTATING CUTTING MEMBER MAY THROW OBJECTS. READ OPERATOR'S MANUAL BEFORE USE. KEEP AREA CLEAR OF BYSTANDERS. TO REDUCE THE RISK OF INJURY, DO NOT OPERATE WITHOUT GUARDS IN PLACE.

ON BLADE GUARD
(Part No. 52-0400)

TABLE OF CONTENTS

	Page
Set-Up Instructions	3
Before Operating	4
Operating Instructions	5-6
Maintenance	7-9
Servicing Air Cleaner	7
Adjusting Carburetor	7
Draining Gasoline	7
Cleaning Cooling System	7
Replacing Spark Plug	8
Changing Oil	8
Cleaning and Lubricating Pivot Arm	8
Replacing Blade	8
Storage	9
Toro Service Support	10
Maintenance Interval Chart	10
Maintenance Record	10 & 11
The Toro Promise	12

©The Toro Company — 1985

SET-UP INSTRUCTIONS

INSTALL UPPER HANDLE (Fig. 1)

1. Remove upper carriage bolts and lock nuts from lower handle.

2. [illegible]ot handle upright and install carriage bo[illegible]and lock nuts. Tighten all four nuts to secure handle in place.

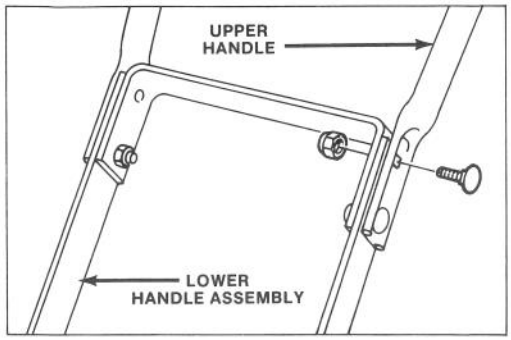

Figure 1

INSTALL BLADE CONTROL ASSEMBLY

1. Screw lock knob and hand grip onto lower rod until they cannot be turned any further (Fig. 2).

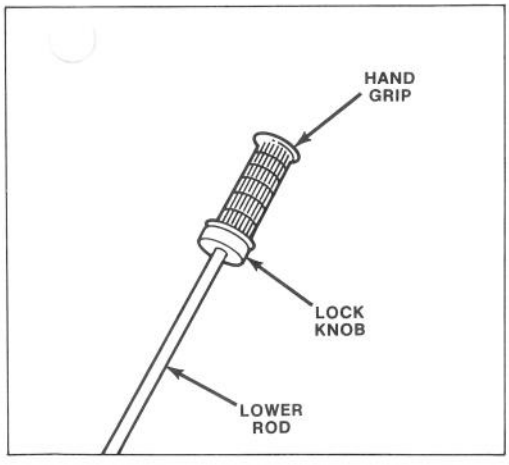

Figure 2

2. Screw hand grip and lower rod assembly about one inch onto upper rod (Fig. 3). Insert ball joint at end of lower rod through the pivot lever (Fig. 3 inset), but do not install lock nut.

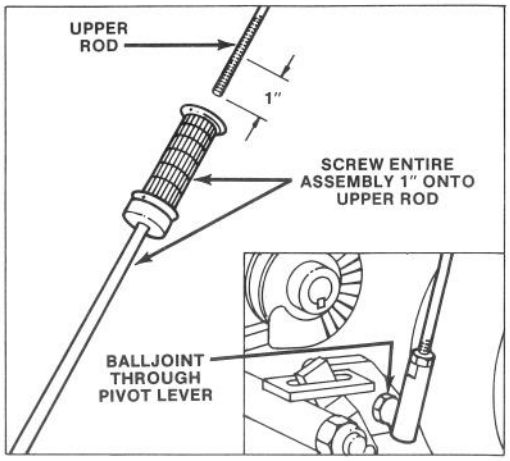

Figure 3

3. CHECK ADJUSTMENT — When blade control is squeezed against handle, distance between top of wheel frame and bottom of spring arm must be 1/16" (Fig. 4). If adjustment is correct, go to step 4. If adjustment is required, remove ball joint from pivot lever and go to step 3A or 3B.

A. To increase space — Screw hand grip and lower rod assembly off upper rod, one turn at a time.

B. To decrease space — Screw hand grip and lower rod assembly onto upper rod, one turn at a time.

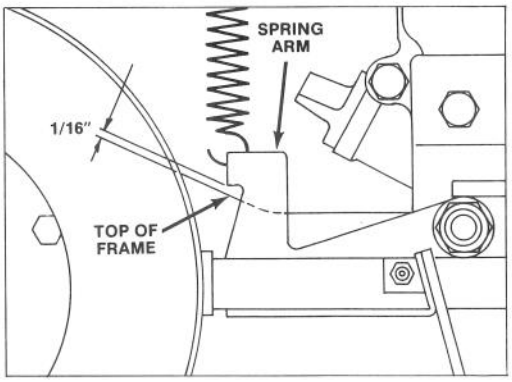

Figure 4

4. Install ball joint through the pivot lever (Fig. 3 inset) and install lock nut. Tighten nut securely.

5. Adjust edging depth: refer to Adjusting Edging Depth, page 6.

BEFORE OPERATING

ADD OIL

1. Position edger on level surface. Clean around oil fill plug (Fig. 5) and remove plug from engine.

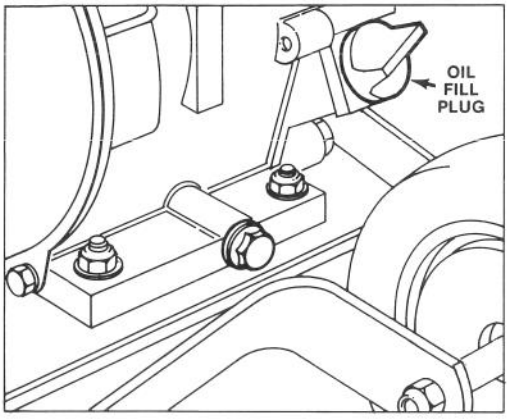

Figure 5

2. Fill oil sump to point of overflowing with 17 ounces of oil and install oil fill plug securely.

Recommended SAE Viscosity Oil Grades

OIL RECOMMENDATIONS

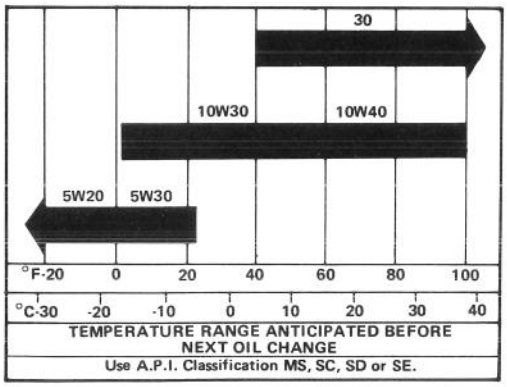

Note: Check oil level each time edger is used or after every 5 operating hours. To check, remove fill plug, wipe dipstick and insert, but DO NOT screw into engine (Fig. 6). Pull dipstick and read level. Initially, change oil after the first 2 hours of operation; thereafter, change oil after every 50 hours of operation. More frequent oil changes are required in dusty or dirty conditions.

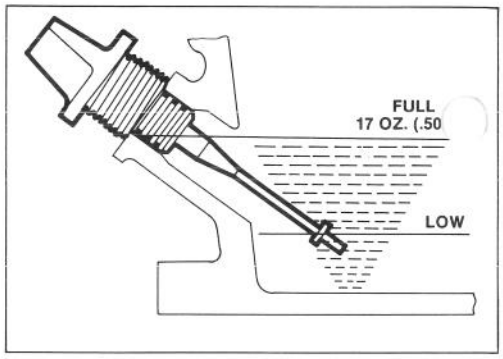

Figure 6

ADD GAS

The Toro Company strongly recommends the use of clean, fresh unleaded regular grade gasoline in Toro gasoline powered products. Unleaded gasoline burns cleaner, extends engine life, and promotes good starting by reducing the build-up of combustion chamber deposits. Leaded gasoline can be used if unleaded is not available.

Refuel outdoors, only when engine is cold. Fill tank to within 1/2" (13 mm) from its top. This space is for expansion of fuel. Use funnel or spout to prevent spilling. Wipe up any spilled gas.

1. Remove gas cap and fill tank to within 1/2-inch (13 mm) from the top with fresh unleaded regular gasoline.
2. Install gas cap and wipe up any spilled gasoline.

IMPORTANT: Do not mix oil with the gasoline. Never use methanol, gasoline containing methanol, gasohol containing more than 10% ethanol, gasoline additives, premium gasoline, or white gas because engine fuel system damage could result.

DANGER

Gasoline is extremely flammable and explosive under certain conditions. Do not smoke when handling fuel and keep fuel far away from open flames and sparks. Never buy more than a 30 day supply of gasoline. Store gasoline in an approved container and keep it out of the reach of children.

OPERATING INSTRUCTIONS

STARTING, STOPPING, EDGING

1. CONTROLS — Blade/clutch lever is on upper handle (Fig. 7), depth adjusting grip is at center of rod (Fig. 12) and ignition switch is at side of engine (Fig. 9).

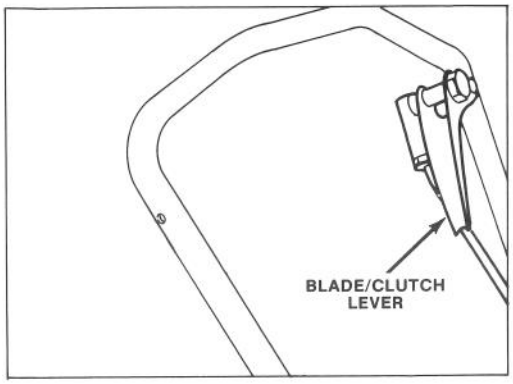

Figure 7

2. STARTING — Push wire onto spark plug and assure blade control is disengaged. Push choke lever to left (Fig. 8). A warm engine will require little or no choking. Rotate switch to ON (Fig. 9). Place foot on rear wheel and pull recoil starter. When engine starts, gradually open choke by moving lever to right.

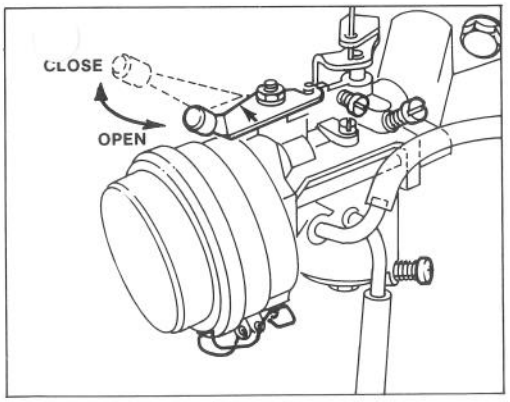

Figure 8

3. EDGING (Fig. 7) — Squeeze blade/clutch lever against handle to engage blade and move cutter to preset depth. Release blade/clutch lever to disengage blade and raise cutter head.

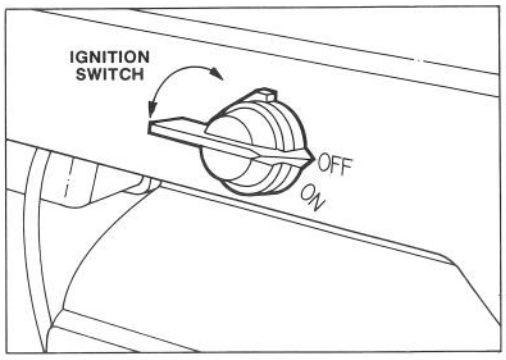

Figure 9

4. STOPPING — Release blade/clutch lever (Fig. 7). Rotate ignition switch to OFF (Fig. 9).

⚠ CAUTION

Stay behind handle until blade stops spinning. Contact with spinning blade may cause injury.

OPERATING TIPS

The new Toro Edger puts the finishing touch on a beautiful lawn in minutes. It will edge along the walk, driveway, curb, flower bed and similar objects.

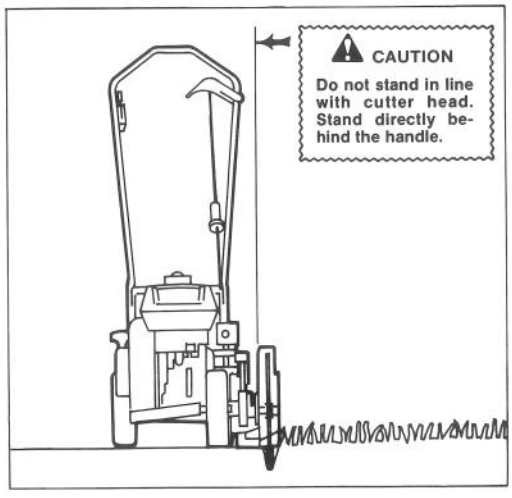

Figure 10

OPERATING INSTRUCTIONS

OPERATING TIPS (Continued)

For best results adjust blade edging depth from 1/2 to 1-inch deep. Edging too deeply will put an unnecessary load on the engine and cause premature blade wear. Not edging deeply enough allows grass to grow back sooner than normal. Be sure to adjust edging depth as blade wears.

Do not force the edger. Move the edger ahead at moderate speeds. Best edging appearance will result when grass is dry. Avoid edging wet grass because the blade may clog and the lawn may take on an irregular edge.

ADJUSTING EDGING DEPTH

Edging depth is infinitely adjustable up to 3½ inches deep.

1. Position edger on level surface and move blade to vertical position.

2. CHECK EDGING DEPTH (Fig. 11) — Squeeze blade/clutch lever against handle. Space between bottom of tire and ground is actual blade edging depth. If adjustment is required, go to step 3.

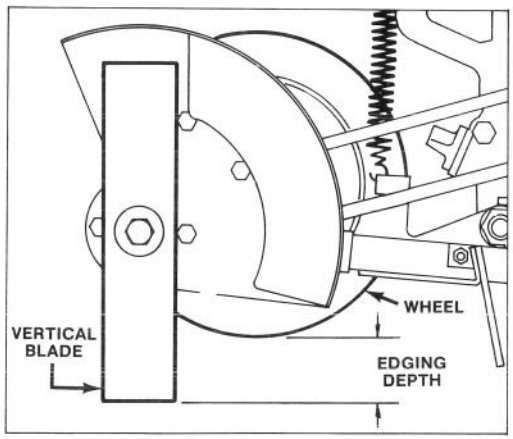

Figure 11

3. ADJUSTING DEPTH (Fig. 12) — Grasp lock knob and grip. Rotate grip counterclockwise until lock knob is free. Screw lock knob down rod so it is out of the way. Then rotate grip clockwise to increase depth and counterclockwise to decrease depth.

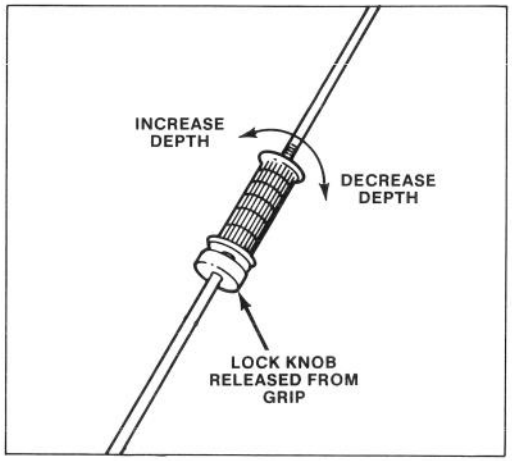

Figure 12

4. To lock adjustment in place, screw lock knob tightly against grip.

Note: Continue turning lock knob, even when friction between knob and grip is felt. Knob must bottom out against metal sleeve on inside of grip.

MAINTENANCE

CAUTION

Pull wire off spark plug before performing adjustments or maintenance. After engine is run, stay away from muffler and nearby engine areas because they could be hot enough to cause burns.

SERVICING AIR CLEANER (Fig. 13)

Normally, clean air cleaner after every 25 operating hours. More frequent cleaning is required when engine is operated in dusty or dirty conditions.

1. Stop engine. Remove rubber cap from engine shroud and pull wire off spark plug.
2. Unsnap latch and remove air cleaner cover. If foam element is dirty, remove it from air cleaner body and clean thoroughly.

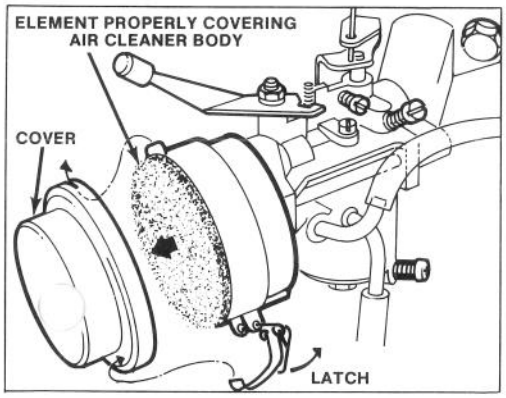

Figure 13

A. Wash element in solution of liquid soap and warm water. Squeeze to remove dirt but do not twist because foam may tear.
B. Dry by wrapping in a clean rag. Squeeze rag and foam element to dry.
C. Saturate element with 5 teaspoons of engine oil. Squeeze element to remove excess oil and to thoroughly distribute oil. A damp element is desirable.

3. Install foam element and air cleaner cover. Outer lip of air cleaner element must extend beyond outer circumference of air cleaner body.
4. Install spark plug wire and rubber cap.

IMPORTANT: Do not operate engine without air cleaner element because extreme engine wear and damage will likely result.

ADJUSTING CARBURETOR (Fig. 14)

The carburetor is set at the factory and normally adjustments are not required. However, if carburetor is serviced and screws must be adjusted, use the following settings:

Idle Speed Setting — 3½ turns open
Idle Mixture Screw Setting — 1⅛ turns open

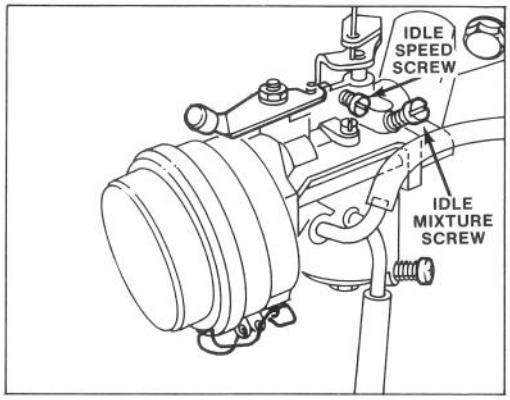

Figure 14

1. To re-set idle mixture screw, gently turn screw clockwise until it just closes. Carburetor may be damaged by turning screw too tightly.
2. Open adjustment screw to prescribed setting.
3. Repeat steps 1 and 2 for idle speed screw.

DRAINING GASOLINE

1. Stop engine. Remove rubber cover from engine shroud and pull wire off spark plug.
2. Remove cap from gas tank and use pump-type syphon to drain fuel into clean gas can.

Note: This is the only procedure recommended for draining fuel.

3. Install spark plug wire and rubber cap.

CLEANING COOLING SYSTEM

After every 75 operating hours (more frequently when dusty or dirty), clean dirt and chaff from cylinder, cylinder head fins and from around carburetor and linkage. Also remove debris from air intake slots on recoil housing. This will assure proper cooling and optimum engine performance.

MAINTENANCE

REPLACING SPARK PLUG (Fig. 15)

Use an NGK B4H spark plug or equivalent. Correct air gap is 0.028" - 0.031" (0.7 - 0.8mm). Remove plug after every 25 operating hours and check its condition.

1. Stop engine. Remove rubber cap from engine shroud and pull wire off spark plug.

2. Clean around spark plug and remove plug from cylinder head.

IMPORTANT: Replace a cracked, fouled or dirty spark plug. Do not sand blast, scrape or clean electrodes because engine damage could result from grit entering cylinder.

3. Set air gap. Install correctly gapped spark plug and gasket seal. Tighten plug firmly to 15 ft-lb (20.4 N·m). Install rubber cap on engine shroud.

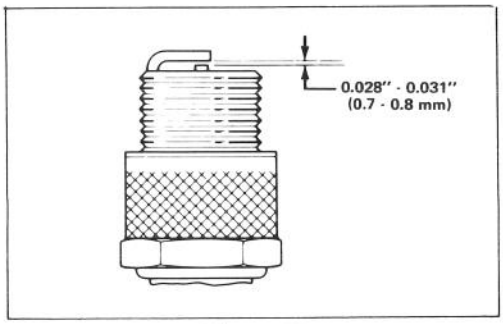

Figure 15

CHANGING OIL (Fig. 16)

Change oil after the first 2 operating hours and after every 50 hours thereafter. Since warm oil drains better and carries more contaminants than cold oil, run engine for a minute or so before draining oil.

1. Stop engine. Remove rubber cap from engine shroud and pull wire off spark plug.

2. Drain gasoline: refer to Draining Gasoline, page 7.

3. While holding front of edger up slightly, remove oil fill and drain plugs (Fig. 1). Slowly tip forward and empty all oil into drain pan. Tip up and down several times to ensure oil drains completely.

4. Install oil drain plug and tighten firmly. Fill oil sump with proper oil: refer to Add Oil, page 2.

5. Install spark plug wire and rubber cap.

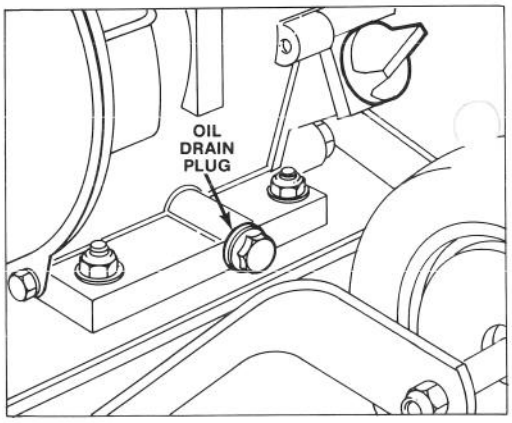

Figure 16

CLEANING AND LUBRICATING PIVOT ARM (Fig. 17)

After every 25 operating hours, more often in dusty or dirty conditions, clean entire pivot arm assembly and lubricate it with #2 general purpose grease.

1. Clean grease fitting and surrounding area.

2. Continue to apply grease until noticeable amount overflows. This helps force dirt out of pivot area assembly.

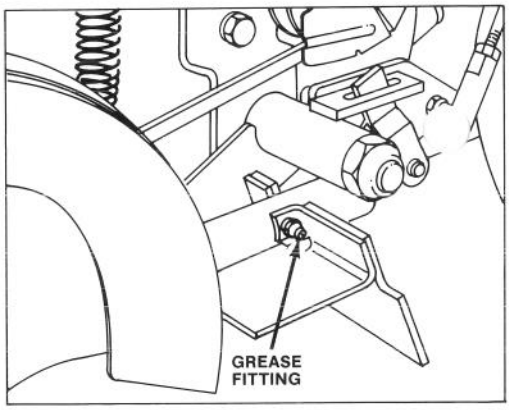

Figure 17

REPLACING BLADE (Fig. 18)

The edger has a 9-inch blade that gradually wear because of use. Replace blade if it wears down to 5 inches or less.

1. Stop engine and pull wire off spark plug.

2. Using 1¼-inch wrench, hold squared bearing shield and remove blade nut and washer. Slide blade and washer off spindle.

MAINTENANCE

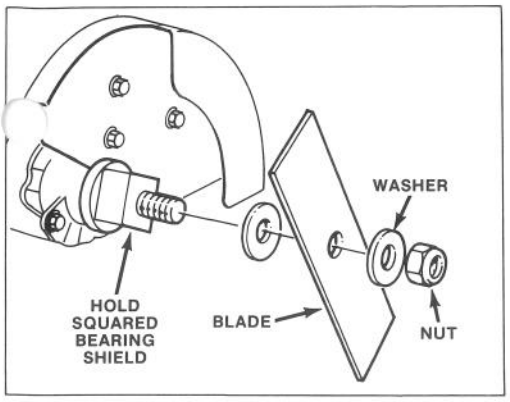

Figure 18

3. Install new blade, existing washers and blade nut in sequence shown. Tighten nut to 40-60 ft-lb.

STORAGE

1. Drain gasoline: refer to Draining Gasoline page 7. Then run engine until all gas is consumed. If gasoline is not drained, gum-like varnish deposits will form and cause poor engine operation, even severe starting problems.

2. Drain oil and refill with fresh oil: refer to Changing Oil, page 8. After oil is drained, do not fill crankcase until steps 3-8 are completed.

3. Clean air cleaner: refer to Servicing Air Cleaner, page 7.

4. Clean dirt and chaff from cylinder, cylinder head fins and blower housing. Also remove grass clippings, dirt and grime from external parts of the engine and shrouding. Clean entire edger thoroughly.

5. Clean and lubricate pivot arm assembly: refer to Clean and Lubricate Pivot Arm, page 8.

6. Inspect edger blade for wear or other visible damage: refer to Replacing Blade, page 8.

7. Tighten all nuts, bolts and screws.

8. Touch up all rusted or chipped paint surfaces. Toro Re-Kote paint is available from an Authorized TORO Service Dealer.

9. Gently pull recoil starter until a drag is felt. This is done to close the valve.

10. Store edger in a clean, dry place. Cover edger to keep it clean and protected.

TORO SERVICE SUPPORT

If help — concerning safety, set-up, operation and maintenance or troubleshooting — is ever needed, contact the local Authorized TORO Service Dealer or Distributor. Refer to the "Yellow Pages" for assistance. In addition to skilled service technicians, the dealer and distributor have factory approved accessories and replacement parts. Keep your TORO all TORO. Buy genu[illegible] TORO replacement parts and accessories.

MAINTENANCE INTERVAL CHART

Service Procedure	Before Each Use	After First 2 Hours	Every 25 Hours	Every 50 Hours	Every 75 Hours
Check Oil	X				
Check Blade	X				
Lubricate Pivot Arm			X		
Check and Gap Spark Plug			X		
Service Air Cleaner*			X		
Change Oil		X		X	
Clean Cooling System					X

*Service more frequently when conditions are dusty or sandy.

MAINTENANCE RECORD

Date	Check Blade	Spark Plug	Lubricate Pivot Arm	Air Cleaner	Change Oil	Cooling System

MAINTENANCE RECORD

Date	Check Blade	Spark Plug	Lubricate Pivot Arm	Air Cleaner	Change Oil	Cooling System

PRODUCT IDENTIFICATION

A model number and a serial number decal is located on the lower handle. Always refer to specific numbers on this decal in correspondence or when replacement parts are needed.

The Toro Promise

A Two Year Limited Warranty
On All
Riding Mowers, Premium Rotary Mowers, Tillers, and Gas Edgers.

The Toro Company promises to repair these TORO Products if defective in materials or workmanship. The following time periods from the date of purchase apply:

Residential Product	2 Years
Residential Products Used Commercially . . .	45 Days

The costs of parts and labor are included, but the customer pays the transportation costs. Just return any residential product to an Authorized TORO Service Dealer or TORO Distributor.

Should you feel your TORO is defective and wish to rely on The Toro Promise, the following procedure is recommended:

1. Contact any Authorized TORO Service Dealer, TORO Master Service Dealer, or TORO Distributor (the Yellow Pages of your telephone directory is a good reference source).
2. He will either instruct you to return the product to him or recommend another Authorized TORO Service outlet which might be more convenient.
3. Bring the product along with your original sales slip, or other evidence of purchase date, to the service dealer.
4. The servicing dealer will inspect the unit, advise you whether the product is defective and, if so, make all repairs necessary to correct the defect without extra charge to you.

If for any reason you are dissatisfied with the dealer's analysis of the defect or the service performed, you may contact us.

Write:

TORO Customer Service Department
8111 Lyndale Avenue South
Minneapolis, Minnesota 55420

The above remedy of product defects through repair by an Authorized TORO Service Dealer is the purchaser's sole remedy for any defect.

THERE IS NO OTHER EXPRESS WARRANTY. ALL IMPLIED WARRANTIES OF MERCHANTABILITY AND FITNESS FOR USE ARE LIMITED TO THE DURATION OF THE EXPRESS WARRANTY.

Some states do not allow limitation on how long implied warranty lasts, so the above limitation may not apply to you.

This Warranty applies only to parts or components which are defective and does not cover repairs necessary due to normal wear, misuse, accidents, or lack of proper maintenance. Regular, routine maintenance of the unit to keep it in proper operating condition is the responsibility of the owner.

All warranty repairs reimbursable under The Toro Promise must be performed by an Authorized TORO Service Dealer using Toro approved replacement parts.

Repairs or attempted repairs by anyone other than an Authorized TORO Service Account are not reimbursable under The Toro Promise. In addition, these unauthorized repair attempts may result in additional malfunctions, the correction of which is not covered by warranty.

The Toro Company is not liable for indirect, incidental or consequential damages in connection with the use of the product including any cost or expense of providing substitute equipment or service during periods of malfunction or non-use.

Some states do not allow the exclusion of incidental or consequential damages, so the above exclusion may not apply to you.

This warranty gives you specific legal rights, and you may also have other rights which vary from state to state.

COMPLIANCE WITH RADIO INTERFERENCE REGULATIONS CERTIFIED
CERTIFIE CONFORME AU REGLEMENT SUR LE BROUILLAGE RADIOELECTRIQUE

Litho in U.S.A.