Form No. 3388-286 Rev A

TORO®

Count on it.

Parts Catalog

Hand-Held Sweeper Blower

Model No. 51702A—Serial No. 315000001 and Up

Register at www.Toro.com.
Original Instructions (EN)

3388-286 A

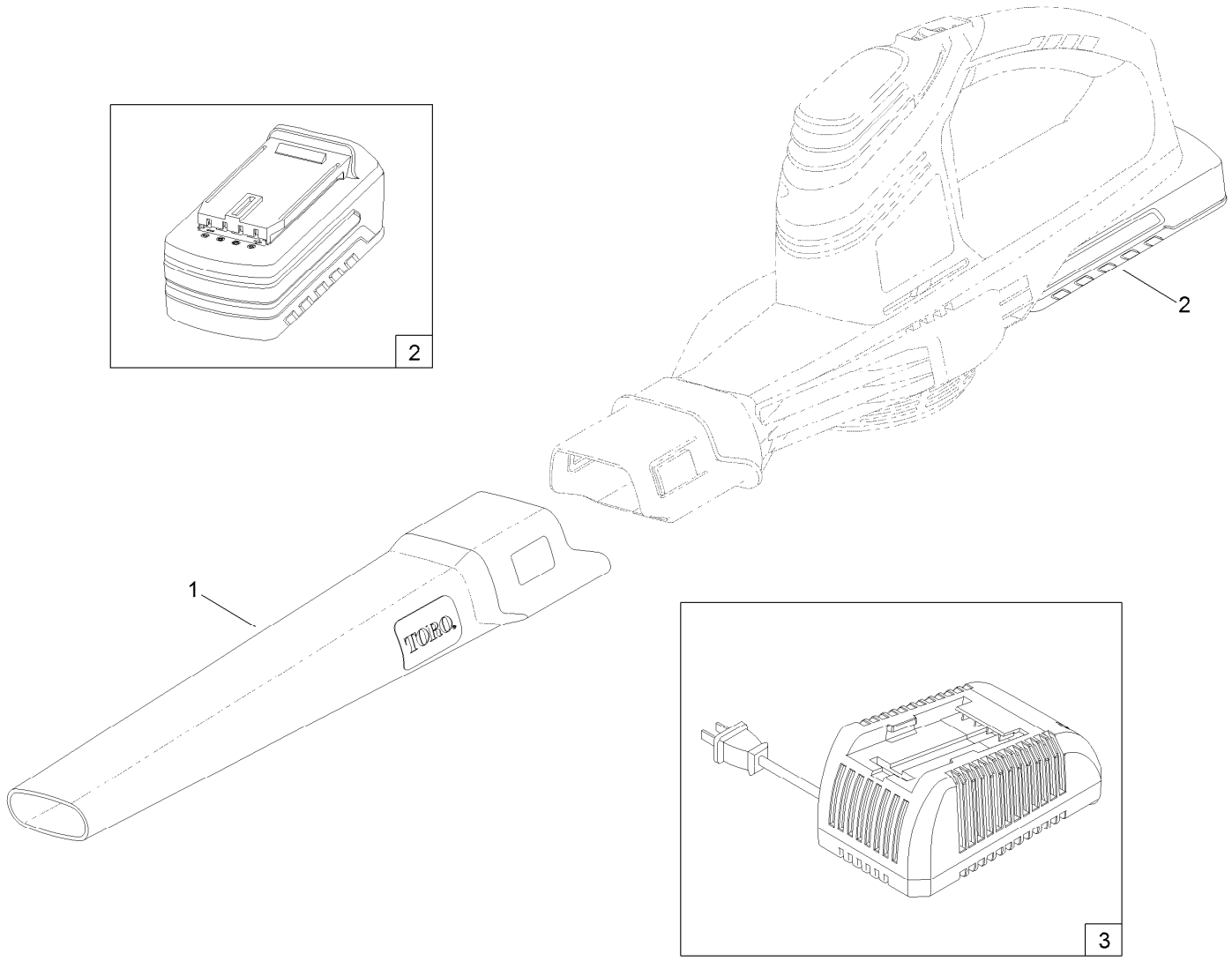

Hand-Held Sweeper Blower Assembly

Ref.	*Part Number*	*Qty.*	*Description*
1	125-8253	1	Tube-Outlet, Sweeper
2	88506A	1	Battery-Li-Ion, 24V, 2.0Ah
3	88503A	1	Charger-24V, Li-Ion Battery

Attachments and Accessories

For 51702A Hand-Held Sweeper Blower

Product Name	Model/Part
24V Li-Ion Battery Charger	88503A
24V Li-Ion Standard Battery Pack	88506A
12in Cordless Single-Line Trimmer	51487AT
24in Cordless Hedge Trimmer	51496AT



Count on it.