FORM NO. 3312-586 Rev. A

TORO®

MODEL NO. 62912 — 6000001
THRU 7000001 & UP
MODEL NO. 62923 — 6000001
THRU 7000001 & UP

OPERATOR'S MANUAL

5 H.P. 30" VACUUM BLOWER

(HAND PROPELLED AND SELF-PROPELLED)



FOREWORD

The Vacuum/Blower is an outstanding product for lawn care. It has advanced concepts in engineering, design and safety; and if maintained properly, the Vacuum/Blower will be reliable.

Since the Vacuum/Blower is a quality product, Toro is concerned about its future use and the safety of the user. Therefore, read this manual to familiarize yourself with correct set-up, operation, and maintenance. The five major sections of the manual are:

1. Safety Instructions
2. Setting Up Instructions
3. Preparation Before Starting
4. Operating Instructions
5. Maintenance

Some information in this manual needs emphasizing. The words CAUTION, IMPORTANT, and NOTE are used to classify the information. "Caution" identifies personal safety related information. "Important" identifies mechanical information demanding special attention. Be sure to read the directive because it has to do with the possibility of damaging a part or parts of the snowthrower "Note" identifies gereral information worthy of special attention.

When vacuum/blower is used or operated on any California forest, brush or grass covered land, a working order spark arrester must be attached to muffler. If not, the operator is violating state law, Section 4442 Public Resources Code.

If help — concerning the vacuum/blower — is ever needed, contact the local Authorized TORO Service Dealer or TORO Distributer. Refer to the yellow pages for assistance. In addition to genuine TORO replacement parts, the dealer and distributor have other TORO products and many accessories for these products.

TABLE OF CONTENTS

	Page
Safety Instructions	3
Safety Decals	4
Loose Parts	4
Setting Up Instructions	4-6
Install Upper Handle and Controls	5
Install Discharge Chute and Bag	5
Install Snout	6
Preparation Before Starting	6-7
Fill Crankcase With Oil	6
Fill Fuel Tank With Gasoline	7
Starting and Stopping	8
Starting Engine	8
Stopping Engine	8
Operating Instructions	8-10
Adjust Intake Housing	8
Traction Control (Self Propelled Model Only)	8
Emptying Vacuum Bag	9
Bag Vent	9
Converting From Vacuum to Blower	9
Two Way Blower Discharge	10
Maintenance	11-15
Changing Engine Oil	11
Draining Gasoline	11
Servicing Air Cleaner	11
Caster Wheels and Pivot Points	12
Grease Rear Idler Assembly	12
Cooling Fins	12
Replace Spark Plug	12
Adjusting Carburetor	12
Adjusting Drive Belt	13
Replacing Drive Belt (SP Model Only)	13
Traction Drive Adjustment (SP Model Only)	14
Preparing Blower for Storage	14
The Toro Promise	16

©The Toro Company — 1985, Rev. 1986

SAFETY INSTRUCTIONS



This safety alert symbol means CAUTION – PERSONAL SAFETY INSTRUCTION. Read the instruction because it has to do with safety. Failure to comply with the instruction may result in personal injury.

The vacuum/blower is designed and tested to offer reasonably safe service, provided it is operated in strict accordance with the following Safety Instructions. Failure to comply with the following instructions MAY RESULT IN PERSONAL INJURY.

BEFORE OPERATING

1. Never allow children to operate the vacuum/blower. Adults should operate the vacuum/blower only after READING THIS MANUAL and receiving proper instructions.

2. Familiarize yourself with the controls. Know how to stop the engine and disengage controls quickly.

3. Keep everyone, especially children and pets, away from the area of operation.

4. Since fuel is highly flammable, handle it with care. Fill fuel tank with gasoline before trying to start the engine.

   A. Use an approved fuel container for storing the gasoline.

   B. Fill fuel tank outdoors, not indoors. Fuel tank must not be filled when engine is running or when engine is hot.

   C. Install gasoline container cap and fuel tank cap, and wipe up any spilled gasoline before starting the engine.

5. Thoroughly inspect the area where vacuum/blower will be used. Clear work area of objects which may be picked up and thrown, or which may wrap around the impeller.

6. Keep all shields and safety devices in place. If a shield or safety device is defective, make all repairs before operating vacuum/blower. Also tighten loose nuts, bolts, and screws.

WHILE OPERATING

7. Never operate vacuum/blower without good visibility or light. Always maintain secure footing and keep a firm grip on the handle. Walk never run.

8. Do not run engine indoors.

9. Keep face, hands, feet, and any other part of your body or clothing away from concealed, moving, or rotating parts. Stay behind the handle while operating the vacuum/blower. STAY CLEAR OF DISCHARGE OPENING AT ALL TIMES.

10. Do not attempt to make adjustments while engine is running.

11. Rotor continues to turn for a few seconds after the engine is shut off. Do not place any part of the body in the rotor area until you are sure the rotor has stopped turning.

12. Do not put hands into the bag when the rotor is turning.

13. Do not operate the vacuum/blower without the bag in place.

14. Stop engine before emptying bag.

15. Stop engine and disconnect spark plug lead wire before removing bag, cleaning discharge chute, removing obstacles, or when leaving machine. Check the bag frequently for wear or deterioration. Replace with a new bag for safe operation.

16. When machine is converted to a blower, be sure intake cover is in place and properly mounted. Do not stand in front of discharge area while machine is in operation.

17. Before leaving the operator's position – behind handle – shut engine off and wait for all moving parts to stop.

18. Before adjusting, cleaning, repairing and inspecting the vacuum/blower, and before unclogging the discharge guide, shut engine off and wait for all moving parts to stop.

19. Before performing any maintenance or servicing the vacuum/blower, shut engine off and wait for engine and all moving parts to stop. Disconnect spark plug wire.

20. Should excessive vibration develop, stop the engine and check the impeller and crankshaft immediately. DO NOT OPERATE THE VACUUM/BLOWER WITH A DAMAGED IMPELLER OR CRANKSHAFT.

21. Keep all nuts, bolts, and screws tight to assure vacuum/blower is in safe working condition. Be sure to check the impeller and engine mounting bolts.

22. ALWAYS USE TORO REPLACEMENT PARTS AND ACCESSORIES TO ASSURE SAFETY AND OPTIMUM PERFORMANCE. NEVER USE "WILL-FIT" REPLACEMENT PARTS AND ACCESSORIES.

SAFETY DECALS

Safety and instruction decals are located on the vacuum/blower. Replace any decal that is damaged.

⚠ WARNING
STOP ENGINE BEFORE REMOVING VACUUM SNOUT OR ROTATING BLOWER HOUSING.
DO NOT OPERATE UNLESS BLOWER INTAKE HOLE IS COVERED.

Top of Blower Housing
(Part No. 37-9250)

⚠ CAUTION
stop engine before removing discharge chute

Front of Blower Housing
(Part No. 20-7010)

⚠ CAUTION
do not remove blower exhaust or stand in front of discharge area while engine is in operation

Top of Exhaust Blower
(Part No. 20-7900)

⚠ CAUTION
do not remove bag while engine is in operation

Top of Chute
(Part No. 20-8710)

To engage traction unit depress lever.

Upper Handle
(Part No. 20-8700)

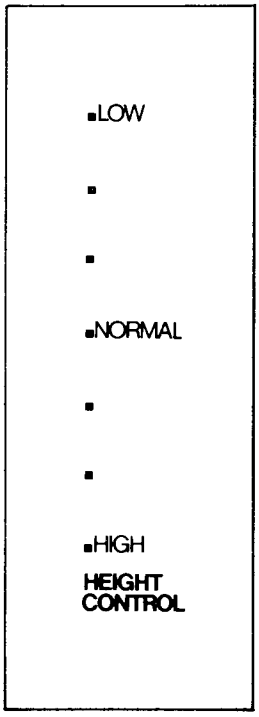

Height Adjustment Bracket
(Part No. 20-6880)

LOOSE PARTS

Note: Using care, remove vacuum/blower and other parts from carton. Use chart below to assure all parts have been shipped.

Description	Quantity	Where Used
Capscrew - 5/16 x 1-1/2	4	Install upper handle, page 5.
Locknut - 5/16"	4	
Screw	1	Secure traction control wire, page 5.
Nut	1	
Hair Pin Cotter	2	Secure height control rod, page 5.
Cable Clip	1	
Self-Tapping Screw	2	Attach throttle control, page 5.
Star Washer	2	
Nylon Spacer	2	
Chute Retaining Screw	1	Install discharge chute, page 5.
Registration Card	1	
Operator's Manual	1	
Blower Intake	1	Converting to blower, page 10.
Blower Exhaust	1	Converting to blower, page 10.

Specifications and design subject to change without notice.

SETTING UP INSTRUCTIONS

Right or left hand is determined from the operator's position behind the handles.

Note: The machine is partially assembled as a lawn vacuum. The blower intake and blower exhaust are not used with the vacuum. To set the machine up as a blower, see Converting From Vacuum to Blower, page 9.

SETTING UP INSTRUCTIONS

INSTALL UPPER HANDLE AND CONTROLS

1. Attach upper section of handle to lower section with four 5/16 x 1-1/2" capscrews and locknuts (Fig. 1).

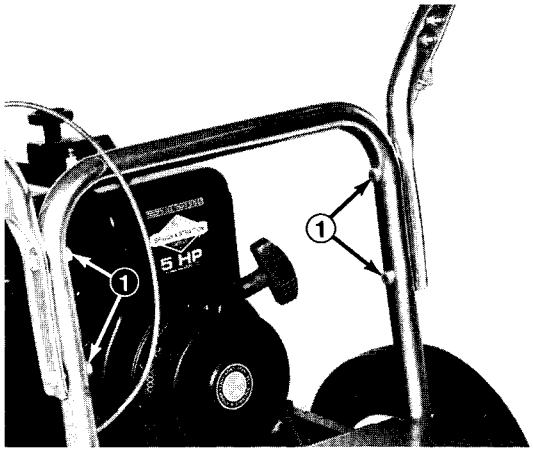

Figure 1

1. Capsrews and locknuts

2. On self-propelled model, hook lower end (ball end) of the traction control wire in keyhole slot in arm on the traction drive guard (Fig. 2). Secure ball in keyhole slot with screw and nut. (Fig. 2).

Note: Make sure ball end of cable is not between screw head and drive guard.

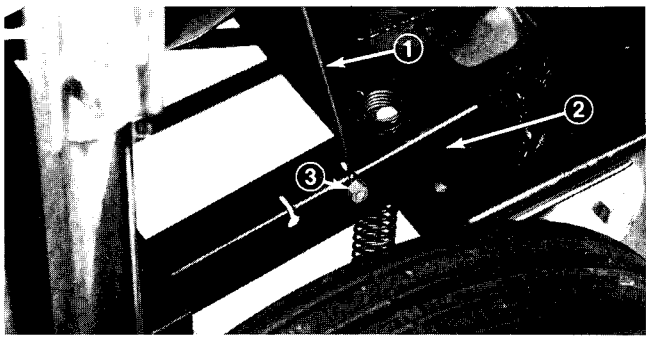

Figure 2

1. Traction control wire
2. Traction drive guard
3. Screw and nut

3. Secure lower end of height control rod to bracket on front wheel support with hair pin cotter (Fig. 3).

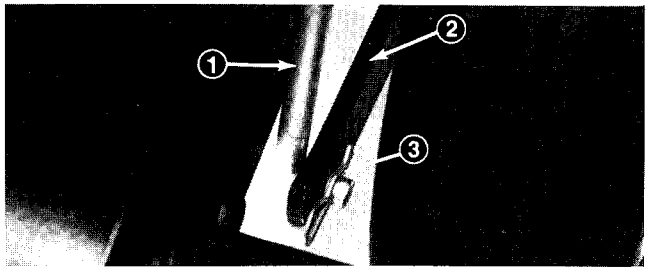

Figure 3

1. Height control rod
2. Front wheel support bracket
3. Washer and hair pin cotter

4. Secure upper end of height control rod to height adjustment handle with hair pin cotter (Fig. 4).

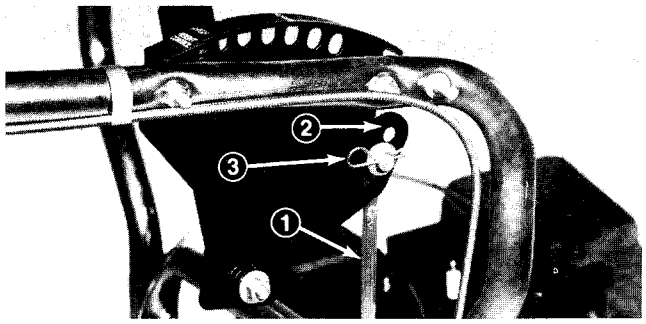

Figure 4

1. Height control rod
2. Height adjustment handle
3. Washer and hair pin cotter

5. Attach the throttle control assembly to the outside of the left side of the upper handle with two self-tapping screws, star washers, and nylon spacers.

6. Secure the cable to the handle with the clip (Fig. 5).

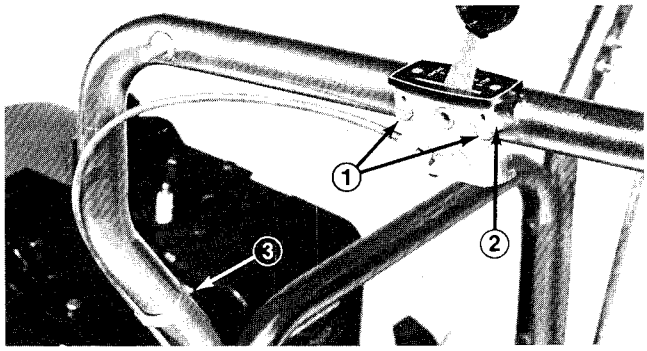

Figure 5

1. Self-tapping screws and star washers
2. Nylon spacers
3. Clip

INSTALL DISCHARGE CHUTE AND BAG

1. Install discharge chute and secure with chute retaining screw (Fig. 6).

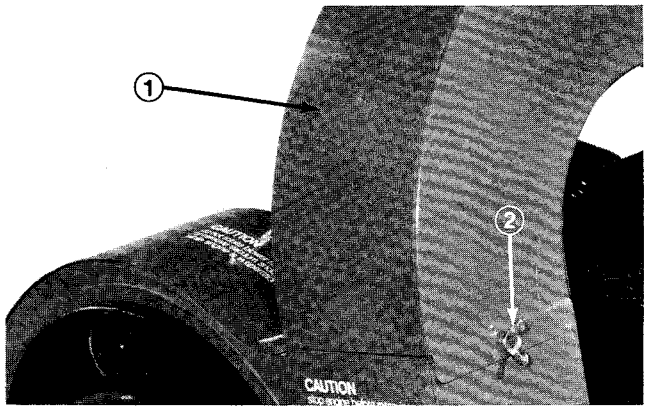

Figure 6

1. Chute 2. Screw

SETTING UP INSTRUCTIONS

2. Position bag onto handle, hooking grommets over pins, and bag strap over handle (Fig. 7).

3. Slip elasticized neck of bag over the flanges on chute (Fig. 7).

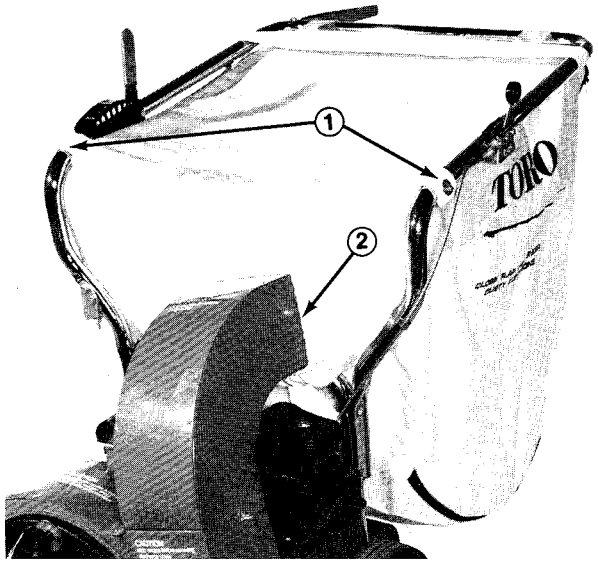

Figure 7

1. Grommets 2. Elasticized neck

INSTALL SNOUT

1. Mount lower edge of flange into mounting brackets.

2. Secure snout to blower with washer and knob (Fig. 8).



Figure 8

1. Lower edge of flange 2. Washer and knob

PREPARATION BEFORE STARTING

FILL CRANKCASE WITH OIL

The engine is shipped from the factory without oil in the crankcase. Therefore, before trying to start engine, oil must be added to the crankcase.

IMPORTANT: Check level of oil every 5 operating hours or each time unit is used. Initially, change oil after the first 2 hours of operation; thereafter, under normal conditions, change oil after every 25 hours of operation. However, change oil more frequently when engine is operated in extremely dirty conditions.

1. Move unit to a level surface to assure an accurate oil level reading.

2. Clean the area around the oil filter plug so foreign matter cannot enter filler hole when plug is removed.

3. Remove filler plug from crankcase (Fig. 9).

4. Using a clean funnel, slowly pour approximately 20 ounces (.59 l) of oil into crankcase filler hole. The Briggs & Stratton engine uses any high quality detergent oil having the American Petroleum Institute – API – "service classification" MS, SC, SD, or SE. Oil viscosity – weight – must be selected according to anticipated ambient temperature.

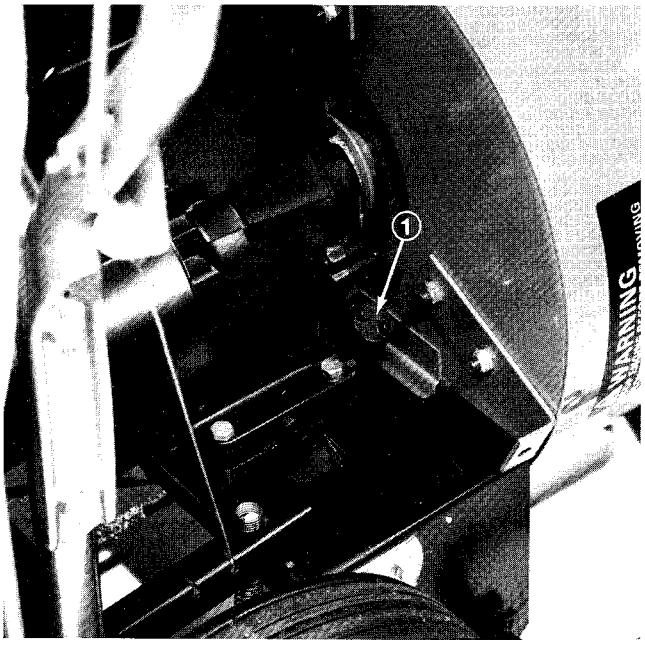

Figure 9

1. Filler plug

PREPARATION BEFORE STARTING

SUMMER

(Above 40°F.) Use SAE 30. If not available, use SAE 10W30.

WINTER

(Between 0°F. and 40°F.) Use 5W20 or SAE 5W30. If not available, use SAE 10W or SAE 10W30.

NO SPECIAL ADDITIVES SHOULD BE USED WITH THE RECOMMENDED OILS.

5. After crankcase is filled to point of overflowing, rock the unit gently to release any air that may be trapped in crankcase. If level of oil drops, add enough oil to bring oil back up to the point of overflowing.

6. Install filler plug into opening in crankcase. Wipe up any oil that may have spilled.

FILL FUEL TANK WITH GASOLINE

THE TORO COMPANY STRONGLY RECOMMENDS THE USE OF CLEAN, FRESH **UNLEADED** REGULAR GASOLINE IN TORO GASOLINE POWERED PRODUCTS. UNLEADED GASOLINE BURNS CLEANER, EXTENDS ENGINE LIFE, AND PROMOTES GOOD STARTING BY REDUCING THE BUILD-UP OF COMBUSTION CHAMBER DEPOSITS. LEADED GASOLINE CAN BE USED IF UNLEADED IS NOT AVAILABLE.

Note: Never use methanol, gasoline containing methanol, gasohol containing more than 10% ethanol, gasoline additives, premium gasoline, or white gas because engine fuel system damage could result.

DRAIN FUEL FROM ENGINE IF UNIT IS TO BE STORED FOR MORE THAN 30 DAYS. REFER TO DRAINING GASOLINE, Page 12.

1. Using a clean rag, clean area around the fuel tank cap. Remove cap from fuel tank and fill tank to within 1/2 inch (13 mm) from the top with gasoline. Reinstall fuel tank cap securely.

DANGER

Because gasoline is flammable, caution must be used when storing or handling it. Do not fill fuel tank while engine is running, hot or when machine is in an enclosed area. Vapors may build up and be ignited by a spark or flame source many feet away. DO NOT SMOKE while filling the fuel tank to prevent the possibility of an explosion. Always fill fuel tank outside and wipe up any spilled gasoline before starting engine. Use a funnel or spout to prevent spilling gasoline, and fill tank to about 1/2 inch (12.7 mm) below the filler neck. Store gasoline in a clean safety-approved container and keep the cap in place on the container. Keep gasoline in a cool, well-ventilated place; never in an enclosed area such as a hot storage shed. To assure volatility, do not buy more than a 30 day supply of gasoline. Gasoline is a fuel for internal combustion engines; therefore, do not use it for any other purpose. Since many children like the smell of gas, keep it out of their reach because the fumes are explosive and dangerous to inhale.

STARTING AND STOPPING

STARTING ENGINE

1. Move throttle control to "choke" position (Fig. 10).

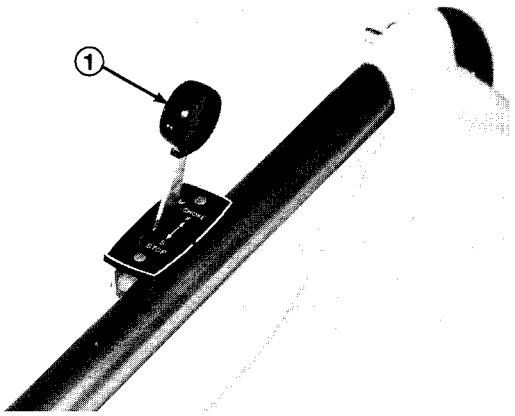

Figure 10

1. Throttle control

2. Pull recoil starter handle out until positive engagement results. Pull handle vigorously to start engine and allow recoil rope to retract slowly.

IMPORTANT: Do not pull recoil rope to its limit or let go of starter handle when rope is pulled out because rope may break or recoil assembly may be damaged.

3. When engine starts, move throttle control to "S" position (slow speed) until engine warms up.

STOPPING ENGINE

1. To stop engine, pull throttle fully to the rear to "STOP" position.

CAUTION

The impeller continues to rotate for a few seconds after the engine is shut off. Do not place any part of the body in the impeller area until you are sure the impeller has stopped.

OPERATING INSTRUCTIONS

CAUTION

Do not operate vacuum without the bag in place. The discharged debris could possibly injure the operator or other persons in the area.

ADJUSTING INTAKE HOUSING

The clearance between the air intake housing and the ground surface may be adjusted to any of 7 positions by moving height adjustment control to desired position. The range of adjustment allows the use of this machine to vary from vacuuming hard surfaces such as sidewalks or driveways, to thick lush turf with a heavy covering of leaves or clippings. The effectiveness of a vacuum depends on creating a "near vacuum" with the ground, so keep the intake as low as is practical.

1. Tip the machine slightly to the rear to take the weight off the castor wheel while adjusting.

2. Move the height adjustment control forward to lower the intake housing; to the rear to raise the housing (Fig. 11).

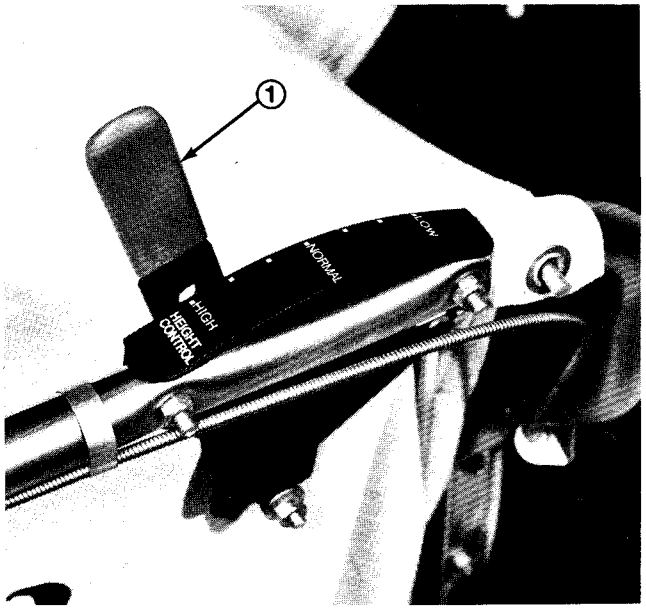

Figure 11

1. Height adjustment control

TRACTION CONTROL (SELF PROPELLED MODEL ONLY)

The traction control must be held down to engage the traction drive. When the control is released, the traction drive is disengaged (Fig. 12).

OPERATING INSTRUCTIONS

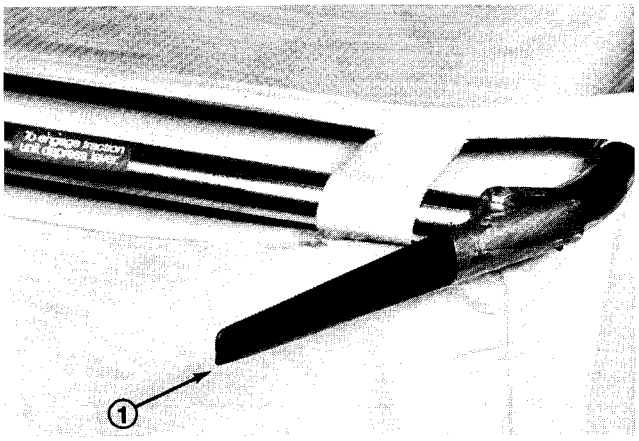

Figure 12

1. Traction control lever (disengaged)

EMPTYING VACUUM BAG

After the bag is filled with grass clippings, leaves, or other debris, it is not necessary to remove the bag to empty it. STOP THE ENGINE, unzip the side of the bag and dump the contents (Fig. 13). Close zipper before starting engine.



Figure 13

1. Zipper for emptying

WARNING

The grass bag material will catch and contain a majority of foreign objects, such as small stones and other similar debris. The bag material, however, is subject to normal wear and deterioration. So check the bag frequently, and if it is defective, install a new, genuine TORO replacement bag that has this or similar warning.

BAG VENT

The bag is provided with a zippered vent. When vacuuming an area which is basically free of dust, the side vent should be open to allow free movement of air to enable the vacuum to operate at maximum efficiency. When vacuuming a dusty area the vent should be closed (Fig. 14).

IMPORTANT: Keep the inside of the bag clean to allow the air to circulate properly.

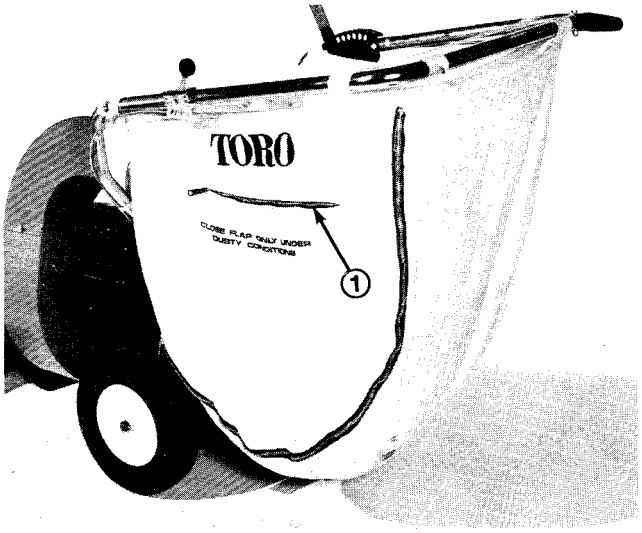

Figure 14

1. Bag vent

CONVERTING FROM VACUUM TO BLOWER

Under some conditions, it will be advantageous to convert the vacuum to a blower. If the surface is uneven, it may be difficult for the vacuum snout to create a "near vacuum" with the ground. If there are many obstacles in the area, or if the area is very large, a blower may be more efficient.

1. Remove knob, washer and snout (Fig. 15).

2. Remove bag neck from discharge chute. (The entire bag may be removed if desired).

3. Remove blower discharge chute.

4. Install blower exhaust. Secure with chute retaining screw.

5. Remove knob securing blower housing.

6. Lift blower housing slightly and rotate it 120° clockwise (as you face the blower). Reinstall knob.

7. Install blower intake screen. Secure it with knob removed with snout.

OPERATING INSTRUCTIONS

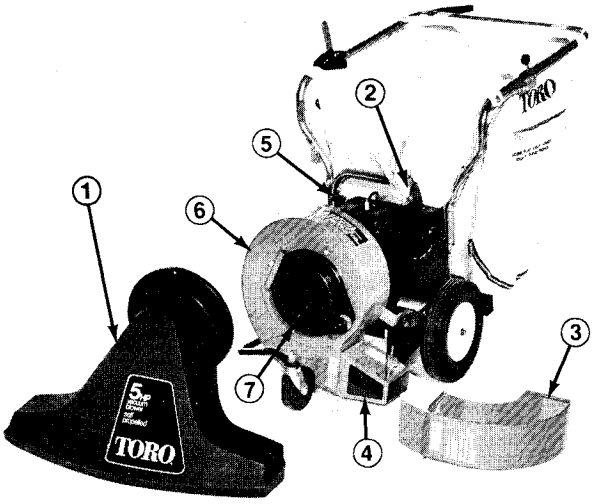

Figure 15.

1. *Remove snout*
2. *Remove bag neck from chute*
3. *Remove chute*
4. *Install exhaust*
5. *Remove knob*
6. *Rotate housing*
7. *Install blower intake screen*

CAUTION

The air stream comes out of the blower in excess of 100 MPH. Be extremely careful where the air stream is directed to avoid bodily injury or property damage.

TWO WAY BLOWER DISCHARGE

The exhaust blower is equipped with an easily directed deflector for directing the air blast forward or to the side. For front discharge, depress the handle and swing the deflector so the tang is in the rear slot (Fig. 16).

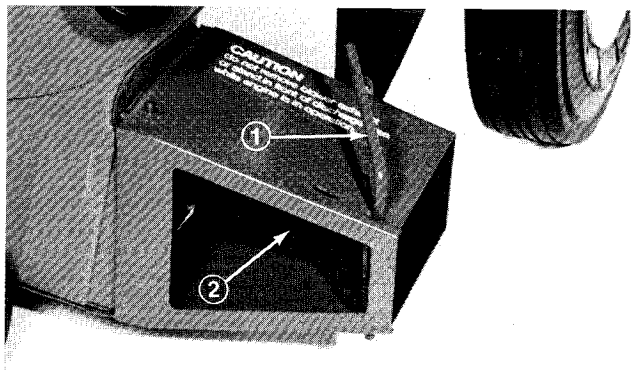

Figure 16

1. Handle in rear position 2. Discharge set for front discharge

For side discharge, depress the handle and swing the deflector forward so the tang is in the front slot (Fig. 17).

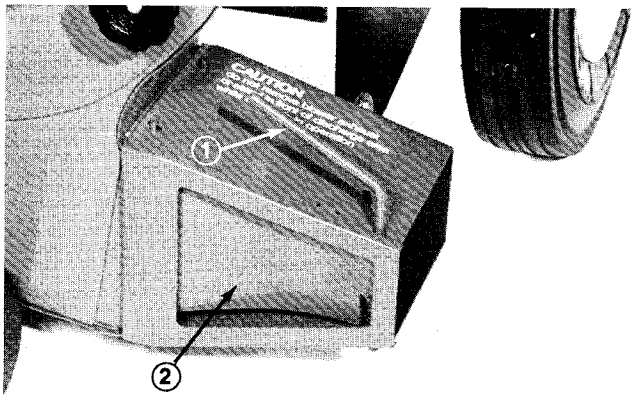

Figure 17

1. Handle in front position 2. Deflector set for side discharge

MAINTENANCE

CAUTION

Disconnect spark plug lead wire before performing any maintenance on your vacuum/blower. Secure the lead wire in the v-shaped notch to prevent accidental contact with the spark plug.

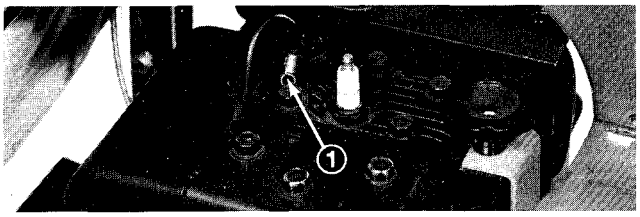

Figure 18

1. Wire in V-shaped notch

CHANGING ENGINE OIL

Check oil level after every 5 hours of operation or each time blower is used. Change oil after the first two hours of operation; thereafter, under normal conditions, change oil after every 25 hours of operation. However, change oil more frequently when engine is operated in dusty or sandy conditions. If possible, run engine just before changing oil because warm oil flows better and carries more contaminants than cold oil.

1. Pull high tension wire off spark plug and install in v-notch (Fig. 18).

2. Clean area around drain plug (Fig. 19).

3. Remove oil drain plug and allow oil to flow into drain pan.

4. After oil is drained, reinstall drain plug and wipe up any oil that spilled.

5. Move the blower to a level surface and fill crankcase with oil; refer to Fill Crankcase with Oil, page 6.

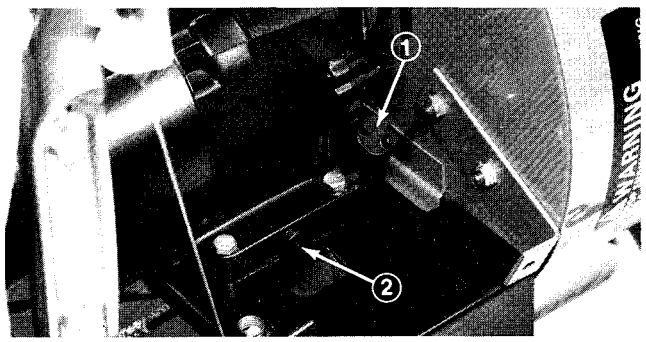

Figure 19

1. Filler plug 2. Drain plug

DRAINING GASOLINE

CAUTION

Since gasoline is highly flammable, drain it outdoors and make sure engine is cool to prevent a potential fire hazard. Wipe up any gasoline that may have spilled. Do not drain gasoline near any open flame or where gasoline fumes may be ignited by a spark. Do not smoke a cigar, cigarette, or a pipe when handling gasoline.

1. ⚠ Assure engine is not running, pull high tension wire off spark plug, and install on V-notch.

2. Remove cap from fuel tank.

3. Using a pump-type syphon, drain gasoline into a clean gas can. This is the only recommended method of draining gasoline.

SERVICING AIR CLEANER

Normally, clean paper cartridge yearly or after every 25 operating hours. More frequent cleaning is required when machine is operated in dusty or dirty conditions.

1. Stop engine, pull high tension wire off spark plug and install in v-notch.

2. Unscrew knob, lift off cover, and remove paper cartridge (Fig. 20).

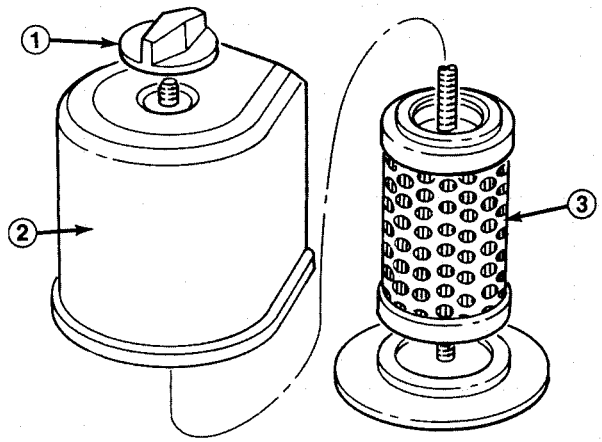

Figure 20

1. Air cleaner knob
2. Air cleaner cover
3. Paper cartridge

3. Clean cartridge by gently tapping on a flat surface. If very dirty, replace cartridge.

MAINTENANCE

CASTER WHEELS AND PIVOT POINTS

Place a few drops of engine oil in the caster wheel bushing and where front wheel support pivots in engine base. Also, oil where rear traction shafts pivot in engine base (self-propelled model only) (Fig. 21).

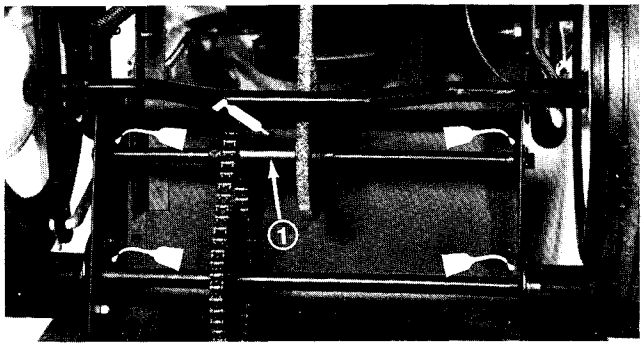

Figure 21

1. Rear idler assembly

GREASE REAR IDLER ASSEMBLY (Self-propelled Model Only)

Lubricate the rear idler assembly with No. 2 general purpose grease after every 25 hours of operation or more frequently when conditions are dusty or sandy (Fig. 21).

COOLING FINS

Clean cooling fins regularly to prevent overheating and possible engine damage.

REPLACING SPARK PLUG

Recommended spark plug to use is a Champion RCJ-8 or equivalent, and correct air gap is 0.030 of an inch (0.76 mm). Since air gap between center and side electrodes of the spark plug increases gradually during normal engine operation, remove plug after every 25 hours of engine operation and check its condition.

1. Assure engine is not running. Then pull high tension wire off spark plug.

2. Clean area around spark plug so foreign matter does not fall into cylinder when plug is removed. Remove plug from cylinder head.

IMPORTANT: A cracked, fouled or dirty spark plug must be replaced. Do not sand blast, scrape or clean electrodes, because grit may eventually release from the plug and fall into the cylinder. The result will likely be engine damage.

3. Set air gap between electrodes at 0.030 of an inch (0.76 mm) (Fig. 22). Install the correctly gapped spark plug with gasket and tighten plug to 15 ft-lb (20.4 N·m). If torque wrench is not used, tighten plug firmly.

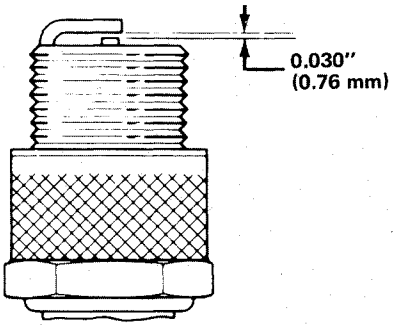

Figure 22

Air gap between electrodes

ADJUSTING CARBURETOR

The carburetor has been set at the factory, but an occasional adjustment may be required. However, do not make unnecessary carburetor adjustments, because factory settings are usually correct. An adjustment may be required to compensate for differences in fuel, temperature, and altitude.

IMPORTANT: Air cleaner must be installed on the engine whenever carburetor is being adjusted. The air cleaner mounting screw must also be installed when engine is run. Fuel tank must be half full of gasoline to get best carburetor adjustment.

1. Needle Valve – Close valve by gently rotating it clockwise (Fig. 23).

IMPORTANT: Do not close needle valve too tight, because valve and seat in carburetor will likely be damaged.

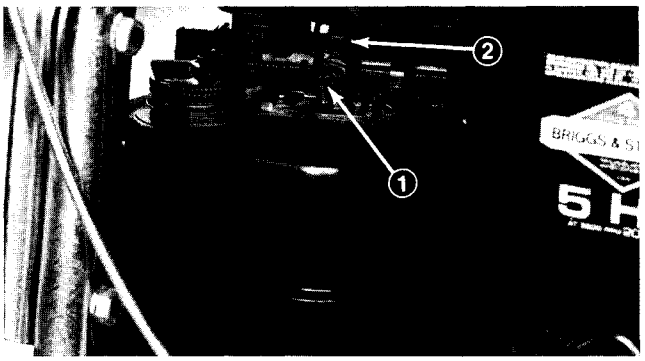

Figure 23

1. Needle valve 2. Idle adjusting screw

2. Open needle valve by rotating 1-1/2 turns counterclockwise.

Note: The needle valve setting is approximate; however, the setting will allow engine to be started so carburetor can be fine tuned.

3. Start engine and let it warm up for approximately two minutes. Next, move throttle control to RUN position.

WARNING

Engine must be running so final adjustment of the carburetor can be performed. To guard against possible personal injury, keep hands, feet, face, and other parts of the body away from any moving parts.

4. Rotate needle valve clockwise 1/8 turn at a time until engine starts to lose speed. Let engine react to each 1/8 turn setting.

5. Rotate needle valve counterclockwise (outward) 1/8 turn at a time until engine first starts to run rough. Let engine react to each 1/8 turn setting.

6. Rotate needle valve clockwise (inward) very slowly until engine starts to run smoothly. This setting, under no load, may be slightly rich; however, the slightly rich setting will assure proper operation when the engine is under load.

7. Move throttle control backward so engine idles. If engine stalls, rotate idle adjusting screw until engine speed increases (1750 rpm).

Note: Rotate idle adjusting screw clockwise to increase idle rpm. By contrast, rotate idle adjusting screw counterclockwise to decrease idle rpm (Fig. 23).

8. Check carburetor adjustment by quickly moving throttle control from idle speed to RUN position. Engine speed should increase without hesitation. If engine tends to stall or die out, rotate needle valve 1/8 turn counterclockwise until engine accelerates smoothly.

ADJUSTING DRIVE BELT (SELF PROPELLED MODEL ONLY)

An adjustment of the drive belt may be required if the loss of traction occurs, or if belt slips.

1. Assure engine is not running, pull high tension wire off spark plug and install on V-notch.

2. Loosen nut and slide pulley until belt is at proper tension (Fig. 24).

3. Tighten just enough so the belt does not slip; do not over-tighten.

4. When adjustment is used up on one pulley, use the other pulley. When adjustment is used up on both pulleys, replace the belt.

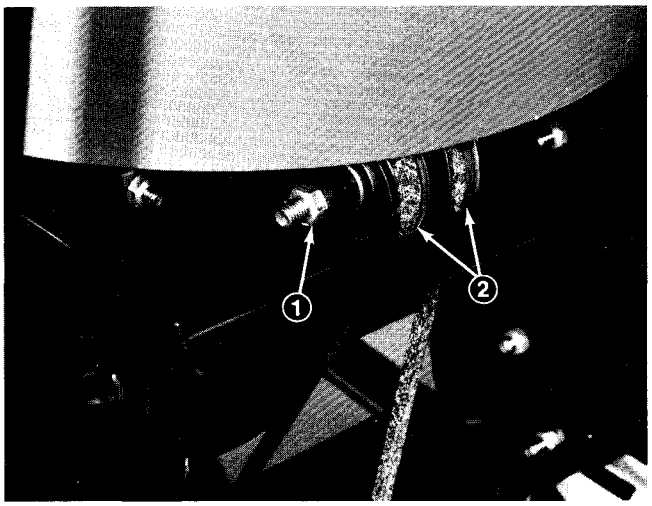

Figure 24

1. Nut 2. Pulleys

REPLACING DRIVE BELT (SELF PROPELLED MODEL ONLY)

1. Assure engine is not running, pull high tension wire off spark plug and install on V-notch.

2. Drain gasoline from fuel tank: refer to Draining Gasoline, page 11.

3. Drain oil from crankcase: refer to Changing Engine Oil, page 11.

4. Cut old belt and remove. Loosen belt tightener pulleys.

5. Remove front snout.

6. Slip the bag off the chute and remove chute.

7. Remove the knob securing the blower housing and lift the housing as much as the impeller allows.

8. Route the new belt around the blower housing.

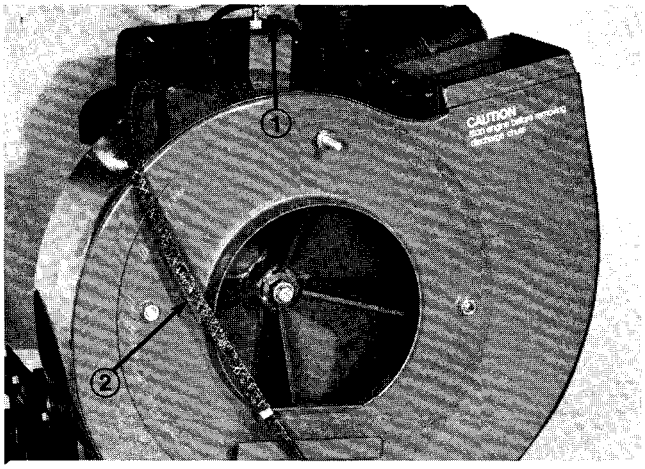

Figure 25

1. Knob removed 2. Belt around housing

9. Insert the belt over the pulley and down through the opening and reinstall and secure the blower housing.

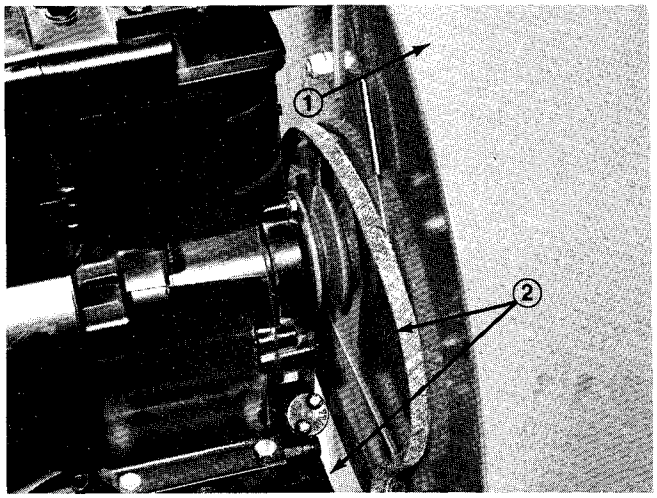

Figure 26

1. Lift housing
2. Feed belt down through opening

10. Refer to Figure 32. Tip the unit back onto the handles. (1) Remove the cotter pin from the end of the shaft, loosen the setscrew in each of the collars (2), and tap the shaft over far enough (3) so the new belt can be installed. (4)

11. Return shaft to its original position and secure collars with setscrews and shaft with cotter pin. Make sure sprockets are aligned properly.

IMPORTANT: The belt must be installed as shown in Figure 27 or the traction drive will run back ward.

12. Tighten belt as described previously.

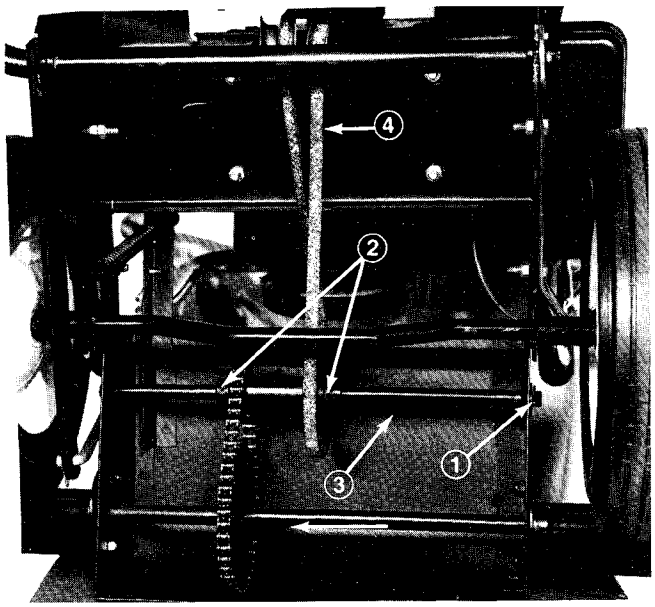

Figure 27

1. Remove cotter pin
2. Loosen setscrews
3. Tap shaft to left
4. Install belt

TRACTION DRIVE ADJUSTMENT (SELF PROPELLED MODEL ONLY)

As the friction wheels and tires experience normal wear, it will be necessary to adjust the traction drive linkage occasionally.

1. Loosen the lock nut on the bottom side of the bracket (Fig. 28).

2. Tighten the upper nut to move the cable housing upward, which in turn moves the friction wheel closer to the tire. (In effect, this shortens the cable to compensate for the wear).

3. When the proper adjustment is attained, tighten the bottom nut up against the bracket to secure the adjustment.

4. When all the adjustment is taken up on the cable housing, move the bracket to the upper hole in the handle and start the adjustment procedure over again.

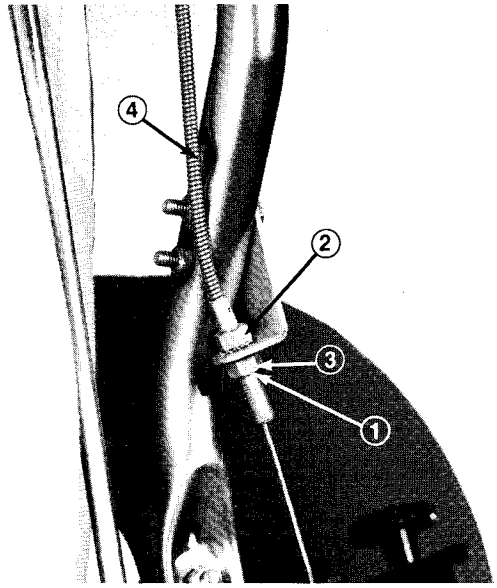

Figure 28

1. Back lower nut down
2. Tighten upper nut as required
3. Tighten lower nut against bracket
4. Move bracket to upper hole for additional adjustment

PREPARING BLOWER FOR STORAGE

1. Drain gasoline from fuel tank: refer to Draining Gasoline, page 11. Start the engine and let it run at idle speed until it stops because all gasoline is used.

Note: All gasoline must be expended to prevent gum-like, varnish deposits from forming in the carburetor, fuel line and fuel tank. Such deposits, if allowed to form, will cause starting problems and poor engine operation.

2. Pull high tension wire off spark plug and clean area around the plug so foreign matter cannot fall into cylinder when plug is removed. Remove plug from cylinder head and pour two tablespoons (10 ml) of SAE 30 oil into spark plug hole. Pull recoil starter handle slowly to distribute oil on inside of cylinder. Then install spark plug and tighten it to 15 ft-lb (20.4 N·m). If torque wrench is not used, tighten plug firmly. DO NOT INSTALL HIGH TENSION WIRE ON SPARK PLUG.

3. Remove drain plug from bottom of engine and allow oil to flow into drain pan. After all oil is drained, install drain plug but do not fill crankcase with oil at this time.

4. Clean dirt and chaff from outside of cylinder, cylinder head fins and blower housing. Also, remove debris, dirt and grime from external parts of engine.

5. Check and tighten all capscrews, bolts, screws, nuts and mating parts. If any part is damaged, repair or replace it.

6. Clean or replace cartridge. Refer to Servicing Air Cleaner, page 11.

7. Fill crankcase with oil: refer to Fill Crankcase With Oil, page 6.

8. Touch up all rusted or chipped paint surfaces. Make sure to sand affected area before painting.

Note: TORO Re-Kote "touch-up" paint is available from any Authorized TORO Service Dealer. The spray paint dries in minutes to a glossy, factory-finish.

9. Store the blower in a clean, dry place. Cover the blower to protect it and keep it clean.

THE TORO PROMISE

It is Toro's policy to design and produce TORO products to provide our customers with a high level of performance and durability in normal operation. Our products, however, are produced in high volume, and it is inevitable that occasionally a unit will reach a customer with a defect in materials or workmanship which causes the unit to fall below the normal high level of TORO performance. Invariably, such a defect will be noticed in a residential product within two years after purchase. Recognizing this possibility, Toro has established a simple guarantee policy and procedure that is intended to assure customer satisfaction. This guarantee statement is as follows:

The Toro Promise

A Two Year Limited Warranty
On All
Gasoline Powered Consumer Products

The Toro Company promises to repair these TORO Products if defective in materials or workmanship. The following time periods from the date of purchase apply:

Residential Product	2 Years
Residential Products Used Commercially . . .	45 Days

The costs of parts and labor are included, but the customer pays the transportation costs. Just return any residential product to an Authorized TORO Service Dealer or TORO Distributor.

Should you feel your TORO is defective and wish to rely on The Toro Promise, the following procedure is recommended:

1. Contact any Authorized TORO Service Dealer, TORO Master Service Dealer, or TORO Distributor (the Yellow Pages of your telephone directory is a good reference source).
2. He will either instruct you to return the product to him or recommend another Authorized TORO Service outlet which might be more convenient.
3. Bring the product along with your original sales slip, or other evidence of purchase date, to the service dealer.
4. The servicing dealer will inspect the unit, advise you whether the product is defective and, if so, make all repairs necessary to correct the defect without extra charge to you.

If for any reason you are dissatisfied with the dealer's analysis of the defect or the service performed, you may contact us.

Write:

TORO Customer Service Department
8111 Lyndale Avenue South
Minneapolis, Minnesota 55420

The above remedy of product defects through repair by an Authorized TORO Service Dealer is the purchaser's sole remedy for any defect.

THERE IS NO OTHER EXPRESS WARRANTY. ALL IMPLIED WARRANTIES OF MERCHANTABILITY AND FITNESS FOR USE ARE LIMITED TO THE DURATION OF THE EXPRESS WARRANTY.

Some states do not allow limitations on how long implied warranty lasts, so the above limitation may not apply to you.

This Warranty applies only to parts or components which are defective and does not cover repairs necessary due to normal wear, misuse, accidents, or lack of proper maintenance. Regular, routine maintenance of the unit to keep it in proper operating condition is the responsibility of the owner.

All warranty repairs reimbursable under The Toro Promise must be performed by an Authorized TORO Service Dealer using Toro approved replacement parts.

Repairs or attempted repairs by anyone other than an Authorized TORO Service Account are not reimbursable under The Toro Promise. In addition, these unauthorized repair attempts may result in additional malfunctions, the correction of which is not covered by warranty.

THE TORO COMPANY IS NOT LIABLE FOR INDIRECT, INCIDENTAL OR CONSEQUENTIAL DAMAGES IN CONNECTION WITH THE USE OF THE PRODUCT INCLUDING ANY COST OR EXPENSE OF PROVIDING SUBSTITUTE EQUIPMENT OR SERVICE DURING PERIODS OF MALFUNCTION OR NON-USE.

Some states do not allow the exclusion of incidental or consequential damages, so the above exclusion may not apply to you.

This warranty gives you specific legal rights, and you may also have other rights which vary from state to state.

Compliance with Radio Interference Regulations Certified.
Certifie Conforme au Reglement sur le Brouillage Radioelectrique.

Litho in U.S.A.