FORM NO. 3312669 Rev C

TORO

MODEL NO. 20620 - 6000001 thru 7000001 & UP
MODEL NO. 20526 - 6000001 thru 7000001 & UP

OPERATOR'S MANUAL

21" (0.53 m) HP & SP REAR BAGGER

FINGERTIP START

ONLY COPY
DO NOT REMOVE
Tech. Publications

⚠ SAFETY INSTRUCTIONS

This mower "meets or exceeds CPSC blade safety requirements for walk behind rotary mowers," and the B71.1-1984 specifications of the American National Standards Institute. However, improper use or maintenance by the operator or owner can result in injury. To reduce the potential for injury, comply with these safety instructions and always pay attention to the safety alert symbol. Failure to comply with the instruction may result in personal injury.

BEFORE OPERATING

1. Read this manual carefully before operating the mower. Become familiar with the controls and proper use of the mower. Never allow children to operate the mower or adults to operate it without proper instructions.

2. Keep everyone, especially children and pets, away from the area of operation. Thoroughly inspect area where mower will be used and remove sticks, stones, wire and debris.

3. Wear long pants and substantial shoes. Do not operate mower while wearing open sandals or when barefoot.

4. Check fuel level before starting engine. Do not fill fuel tank indoors, when the engine is running, or until engine cools for several minutes after running. Wipe up spilled gasoline before starting engine.

5. Keep all guards, shields and safety devices in place. Repair or replace defective or damaged parts.

6. Engine, blade and traction drive are designed to stop when control bar is released. Assure control and brake function properly before each use of mower.

WHILE OPERATING

7. Do not run engine indoors.

8. Always maintain secure footing. Keep a firm grip on the handle and walk; never run. Never operate mower in wet grass. Mow only in daylight or in good artificial light.

9. Mow across the face of slopes; never up and down. Use extreme caution when changing direction on slopes. Do not mow excessively steep slopes.

10. Always wear safety glasses or eye shields during operation to protect eyes from foreign objects that may be thrown from the machine. Keep face, hands and feet away from the mower housing and cutter blade when the engine is running. Stay behind the handle until the engine stops and keep clear of discharge opening at all times.

11. When mulching, keep grass bag in place and assure chute door is closed. When bagging grass, stop engine and assure chute door is closed before the bag is removed and emptied.

12. Shut engine off and wait for all moving parts to stop before unclogging chute.

13. Since the blade rotates for a few seconds after the blade control is released, stay behind the handle until all moving parts stop.

14. After striking a foreign object or if mower vibrates abnormally, stop engine and remove wire from spark plug. Check mower for damage and make all repairs before using mower again.

15. Stop the engine before adjusting the height-of-cut.

16. Stop the blade when crossing a gravel driveway, road or sidewalk.

17. Stop engine before leaving the operator's position — behind the handle. Disconnect wire from spark plug if mower will be unattended.

18. Do not touch engine while it is running or shortly after it is stopped because engine will be hot enough to cause a burn.

MAINTENANCE

19. Perform only those maintenance instructions described in this manual. If major repairs

©The Toro Company – 1986

are ever needed or if assistance is desired, contact an Authorized TORO Service Dealer.

20. Before mower is cleaned, inspected, serviced or adjusted, stop engine and disconnect high tension wire from spark plug. Keep wire away from plug to prevent accidental starting.

21. To assure the mower is in safe operating condition, frequently check and keep all nuts, bolts and screws tight. Assure blade bolt is tightened to 50 ft-lb (68 N·m).

22. To reduce fire hazard, keep engine free of excessive grease, grass, leaves and accumulations of dirt.

23. Check grass catcher bag frequently for wear or deterioration. Replace with a new bag for your protection.

24. Allow engine to cool before storing mower in any enclosure. Do not store mower near any open flame or where gasoline fumes may be ignited by a spark.

25. Do not overspeed the engine by changing governor settings.

26. At the time of manufacture the mower conformed to the safety standards in effect for rotary mowers. To assure optimum performance and continued safety certification of the mower, use genuine TORO replacement parts and accessories. Replacement parts and accessories made by other manufacturers may result in non-conformance with the safety standards, and that could be dangerous.

SAFETY DECALS

Safety decals and instructions are easily visible to the operator and are located near any area of potential danger. Replace any decal that is damaged.



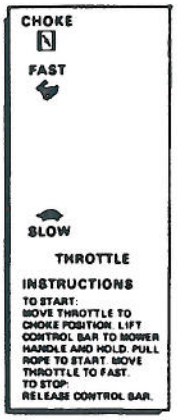

ON CONTROL PANEL (Part No. 49-7790) (Model 20526)



ON HANDLE (Part No. 49-1770)(Model 20526)

ON MOWER HOUSING (Part No. 39-5770)



ON CONTROL PANEL (Part No. 49-7780 (Model 20620)



TABLE OF CONTENTS

	Page
Set-Up Instructions	3
Before Operating	4
Operating Instructions	5-7
Maintenance	8-12
Servicing Air Cleaner	8
Replacing Spark Plug	8
Draining Gasoline	8
Adjusting Throttle	8
Changing Crankcase Oil	9
Adjusting Wheel Drive	9
Inspecting/Removing/Sharpening Blade	10
Lubrication	10
Adjusting Blade Brake	11
Adjusting Ground Speed Control For Neutral	11
Cleaning Mower Housing	12
Preparing Mower For Storage	12
Optional Spark Arrestor	12
Product Identification	12
Toro Service Support	13
Maintenance Record	13-14
Troubleshooting Chart	15
The Toro Promise	16

INSTALL HANDLE , STARTER ROPE AND BAG

1. Align handles and tighten handle knobs (Fig. 1). Bend handle latches slightly toward each other (Fig. 1).

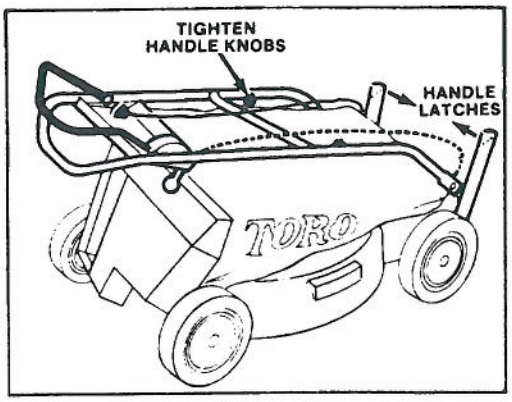

Figure 1

2. Pivot handle backward until handle stud snaps into center hole of handle latch (Fig. 2). Assure control cables are to the rear and inside of handles.

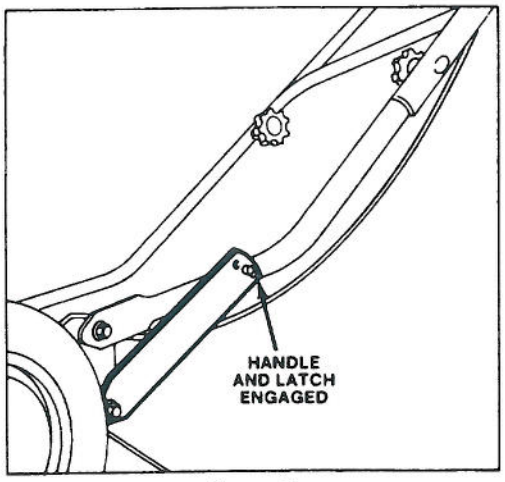

Figure 2

3. Install grass bag: refer to Using Grass Bag, page 6, steps 1-5.

4. Pull starter rope through loop opening on handle (Fig. 3). By squeezing control bar on handle, blade brake will release and allow rope to be pulled up easily to loop.

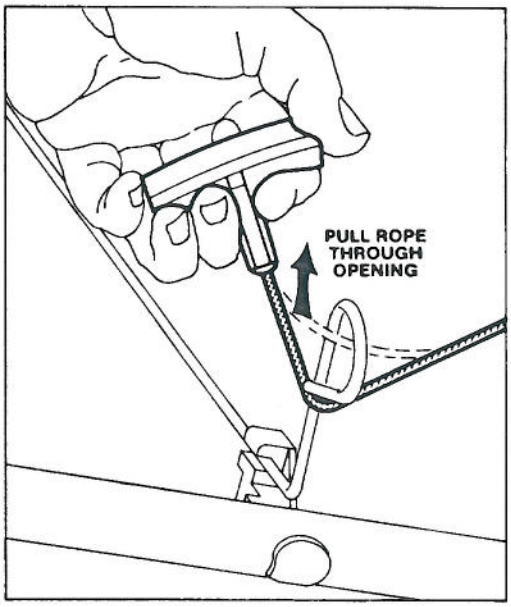

Figure 3

FILL CRANKCASE WITH OIL

Initially, crankcase must be filled with 18 ounces (0.532 l) of SAE 10W30 oil. Use any high quality detergent oil having the American Petroleum Institute—API—"service classification" MS, SC, SD, SE or SF.

Before each use, assure oil level is in SAFE range. Add oil if level is low.

1. Position mower on level surface and clean around oil dipstick.

2. Remove dipstick by rotating cap counterclockwise 1/4 turn.

3. Wipe dipstick and insert it into filler neck. Rotate cap clockwise 1/4 turn. Then remove dipstick and check level of oil (Fig. 4). If level is low, add only enough oil to raise level to FULL mark on dipstick. DO NOT FILL ABOVE FULL MARK BECAUSE ENGINE COULD BE DAMAGED WHEN STARTED.

5. Insert dipstick into filler neck and rotate cap clockwise 1/4 turn to lock.

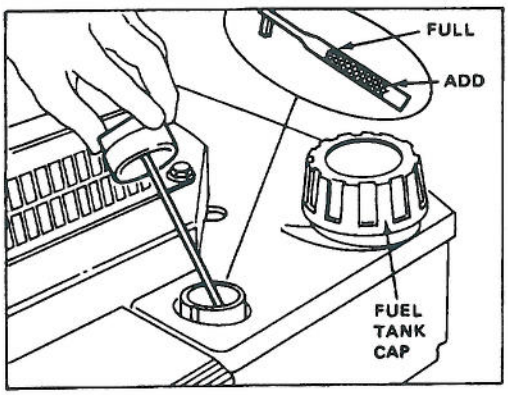

Figure 4

Note: Check oil level each time mower is used or after every 5 operating hours. Initially, change oil after the first 2 hours of operation; thereafter, change oil after every 25 hours of operation or at the end of each cutting season. More frequent oil changes are required in dusty or dirty conditions.

FILL FUEL TANK WITH GASOLINE

Note: The Toro Company strongly recommends the use of fresh, clean, **UNLEADED** regular grade gasoline in Toro gasoline powered products. Unleaded gasoline burns cleaner, extends engine life, and promotes good starting by reducing the build-up of combustion chamber deposits. Leaded gasoline can be used if unleaded is not available.

1. Clean around fuel tank cap and remove cap from tank (Fig. 4). Using unleaded gasoline, fill fuel tank to within 1/2 inch (13 mm) from top of tank.

2. Install fuel tank cap and wipe up any spilled gasoline.

IMPORTANT: Do not mix oil with the gasoline. Never use methanol, gasoline containing methanol, gasohol containing more than 10% ethanol, gasoline additives, premium gasoline, or white gas because engine fuel system damage could result.

DANGER

Gasoline is extremely flammable and explosive under certain conditions. Do not smoke when handling fuel and keep fuel far away from open flames and sparks. Never buy more than a 30 day supply of gasoline. Store gasoline in an approved container and keep it out of the reach of children.

Refuel outdoors, only when engine is cold. Fill tank to within 1/2" (13 mm) from its top. This space is for expansion of fuel. Use funnel or spout to prevent spilling. Wipe up any spilled gas.

5-In-1 MOWING VERSATILITY

REAR BAG — Bag lush grass in the spring to help keep your lawn free of thatch forming clippings.

MULCH — In summer, when grass grows slower and is drier, mulch by closing chute door (Fig. 5). For convenience and protection, keep grass bag on mower.

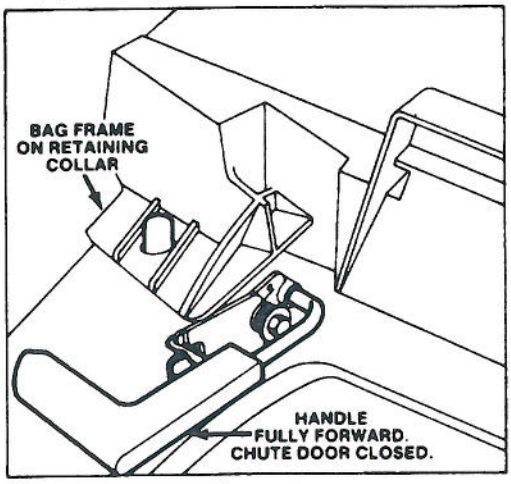

Figure 5

SIDE DISCHARGE — Disperse clippings with optional, rear-mounted side discharge chute which installs in seconds. Between the handle design lets you trim on both sides (Fig. 6).

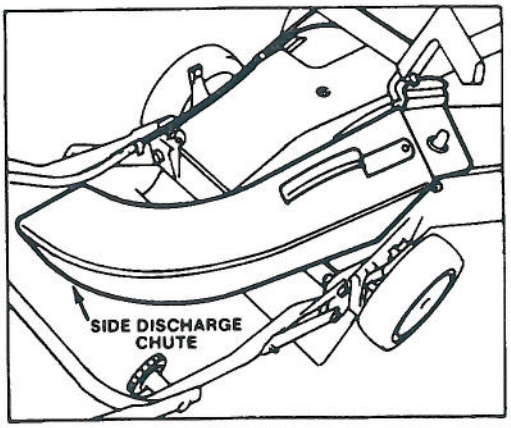

Figure 6

SHRED LEAVES — In fall, optional leaf shredder (Fig. 7) reduces leaves to a fraction of their original size while you bag. Minimizes emptying stops and number of trash bags used for disposal.

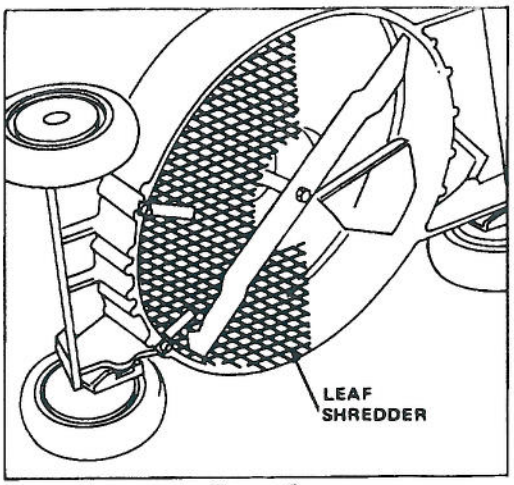

Figure 7

REMOVE THATCH (MODEL 20620 only)-As spring tines on optional Toro Dethatcher scratch and vibrate through the grass, thatch is loosened and conveniently vacuumed into the bag (Fig. 8).

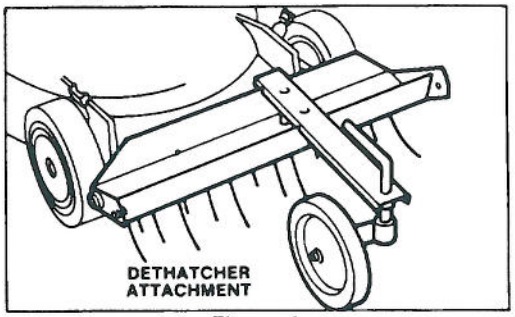

Figure 8

OPERATING TIPS

1. CHECK OIL LEVEL — Maintain oil level in SAFE range as shown on dipstick.

2. BEFORE EACH MOWING—Assure engine brake, self-propelled drive and control bar function properly. When control bar is released, engine, blade and self-propelled drive are designed to stop.

3. CUTTING AND BAGGING — Best results are achieved when engine is running at maximum speed and only about 1/3 of the grass blade is cut. If long grass must be cut, use highest height-of-cut setting for first mowing. Then recut the grass at a more normal setting. If too long of grass is cut, mower may plug and cause engine to stall.

4. SHARP BLADE — Begin each cutting season with a sharp blade. Periodically file down nicks.

STARTING, STOPPING AND SELF-PROPELLING

1. CONTROLS—Ground speed control (Model 20620 only), throttle, control bar and fingertip starter are on upper handle (Fig. 9 & 10).

2. Push wire onto spark plug.

3. STARTING (Model 20526)—Move throttle to CHOKE and hold control bar against handle. Pull fingertip starter out slowly until positive engagement results; then pull vigorously to start the engine. Regulate throttle as desired when engine starts (Fig. 9). When temperature is near 40°F, a few extra pulls may be required because the engine needs priming.

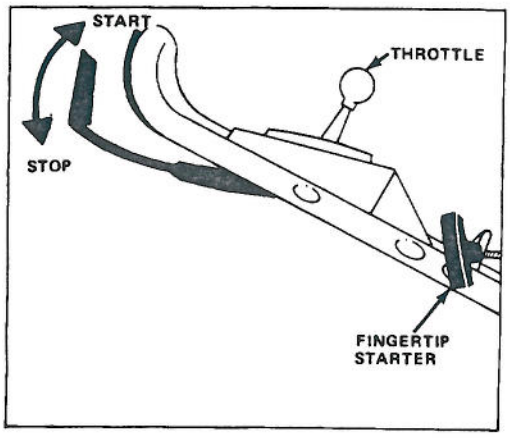

Figure 9

4. STARTING (Model 20620)—Move ground speed control to "N" and throttle to CHOKE. Lift control bar to RUN/DRIVE position and hold. Pull fingertip starter and regulate throttle as desired when engine starts (Fig. 10). When temperature is near 40°F, a few extra pulls may be required because the engine needs priming.

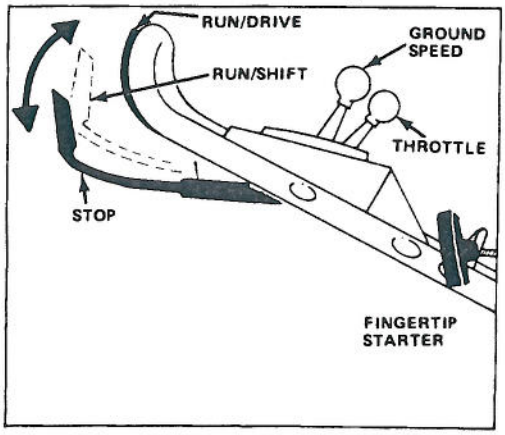

Figure 10

5. TRACTION OPERATION (Model 20620)—Allow control bar to move into the RUN/SHIFT position. Move ground speed control to desired setting and squeeze control bar against handle to drive. Ground speed varies, depending on space between control bar and handle. (Fig. 10).

6. STOPPING—To stop engine, release control bar. Pull wire off spark plug if mower is unattended or not used.

USING GRASS BAG

Keep bag installed when bagging or mulching.

1. Stop engine and wait for all parts to stop.

2. Assure chute door handle is fully forward and pin is engaged in catch.

3. Swing rope rod over to right (Fig. 11).

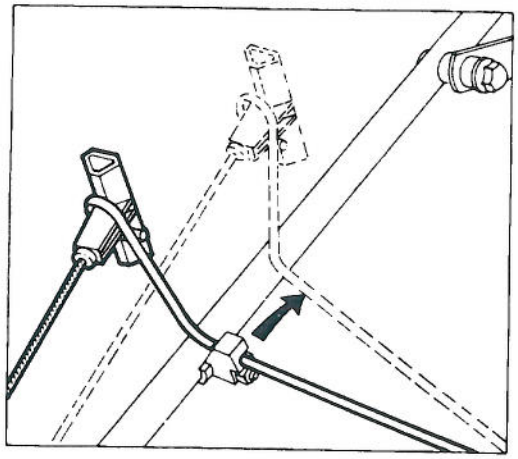

Figure 11

4. INSTALLING BAG — Slide hole in bag frame onto retaining collar on housing (Fig. 12) and set rear of bag frame onto lower handle.

5. Pull chute door handle forward until pin clears catch and move handle rearward until pin locks in bag notch (Fig. 12). Chute door in mower housing is now open. It may be necessary to push down on top right of bag door to release handle locking pin from catch.

6. EMPTYING BAG — Release control bar and wait for blade to stop. Move chute door handle forward to engage the locking pin with catch (Fig. 5). Grasp handle at front and rear of bag and lift bag off mower. Gradually tip bag forward to empty clippings.

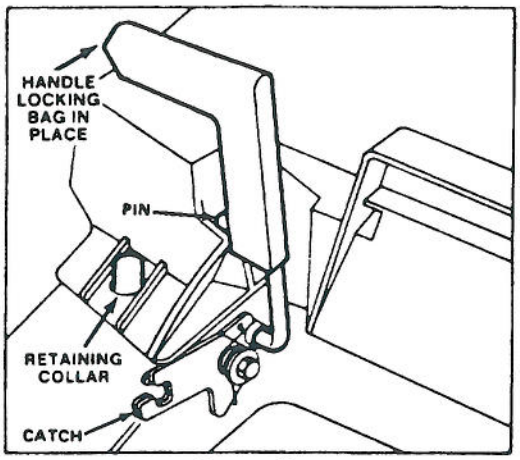

Figure 12

⚠ CAUTION

Except when side discharge attachment is used, never open chute door on mower when engine is running unless grass bag is properly installed, because grass clippings and other debris discharges with enough force to cause injury.

The grass bag material will catch and contain the majority of foreign objects, such as small stones and other similar debris. The bag material, however, is subject to normal wear and deterioration. So check the bag frequently, and if it is defective, install a new genuine TORO replacement bag that has this or similar warning.

⚠ CAUTION: If chute door cannot be closed because grass clippings clog discharge area, gently move chute door handle back and forth until door can be closed completely. Do not force chute door closed because door or handle may be damaged. If door still cannot be closed, make sure engine is stopped and remove obstruction.

7. To reinstall bag, repeat steps 4 and 5. Then swing rope rod to the left and push rod into retaining bracket (Fig. 11).

ADJUSTING HEIGHT-OF-CUT

Five letters cast into the housing represent each graduated increment (Fig. 13).

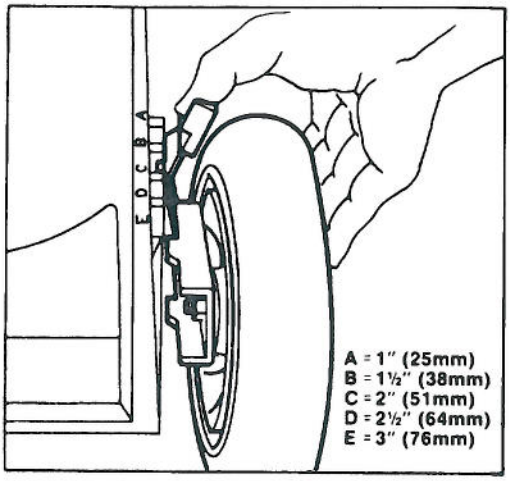

Figure 13

1. Stop the engine.
2. For easier adjustment, lift housing up so wheel is off ground. Squeeze adjusting lever toward wheel and move them to desired setting (Fig. 13). Assure pin on adjusting lever engages notch in housing. Adjust all wheels to the same setting.

Note: Front wheels can be adjusted to 1/2 inch. Move adjusting lever past "A" and release pin into hole in housing.

⚠ CAUTION

Pull wire off spark plug before performing adjustments or maintenance.

SERVICING AIR CLEANER

Normally, clean air cleaner after every 25 operating hours. More frequent cleaning is required when mower is operated in dusty or dirty conditions.

1. Stop engine and pull wire off spark plug.

2. Push in locking tabs and lift off air cleaner cover. Clean cover thoroughly (Fig. 14).

3. If top of foam element is dirty, remove it from air cleaner body (Fig. 14). Clean thoroughly.

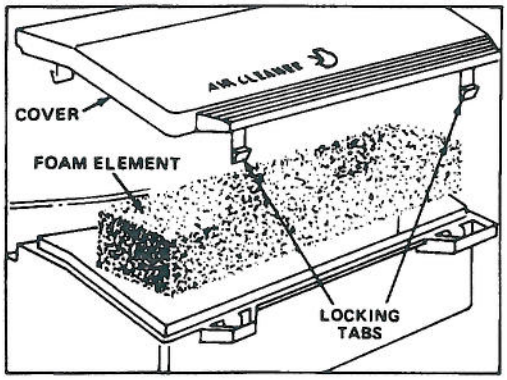

Figure 14

A. WASH foam element in a solution of liquid soap and warm water. Squeeze to remove dirt, but do not twist because foam may tear.

B. DRY by wrapping in a clean rag. Squeeze rag and foam element to dry.

C. SATURATE element with 5 teaspoons (25 ml) of SAE 30 engine oil. Squeeze element to remove excess oil and to distribute oil thoroughly. A damp element is desirable.

4. Reinstall foam element and air cleaner cover.

IMPORTANT: Do not operate engine without air cleaner element because extreme engine wear and damage will likely result.

REPLACING SPARK PLUG

Use an NGK BPR6ES spark plug or equivalent. Correct air gap is 0.032" (0.813 mm). Remove plug after every 25 operating hours and check its condition.

1. Stop engine and pull wire off spark plug.

2. Clean around spark plug and remove plug from cylinder head.

IMPORTANT: Replace a cracked, fouled or dirty spark plug. Do not sand blast, scrape or clean electrodes because engine damage could result from grit entering cylinder.

3. Set air gap at 0.032" (0.813 mm) (Fig. 15). Install correctly gapped spark plug and gasket seal. Tighten plug firmly to 15 ft-lb (20.4 N·m).

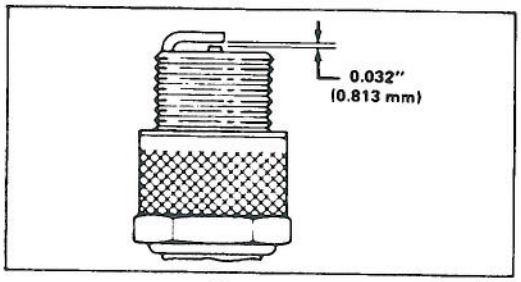

Figure 15

DRAINING GASOLINE

1. Stop engine. Pull wire off spark plug.

2. Remove cap from fuel tank and use pump-type syphon to drain fuel into clean gas can.

Note: This is the only procedure recommended for draining fuel.

ADJUSTING THROTTLE

Throttle control adjustment may be required if engine does not start. Whenever a new throttle control cable is installed, throttle must be adjusted.

1. Stop engine and pull wire off spark plug.

2. Close door on mower housing and remove grass bag.

3. Move throttle control to FAST.

4. Loosen cable clamp screw until throttle cable slides (Fig. 16). Align holes in throttle lever and throttle bracket. Pull throttle cable slightly to remove any slack and tighten cable clamp screw to lock adjustment in place.

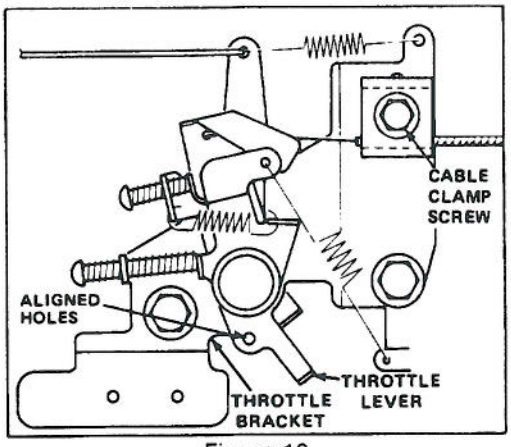

Figure 16

CHANGING CRANKCASE OIL

Change oil after the first 2 operating hours and after every 25 hours thereafter. Since warm oil drains better and carries more contaminants than cold oil, run engine for a minute or so before draining oil.

1. Stop engine and pull wire off spark plug.
2. Remove grass bag. Drain gasoline from fuel tank: refer to Draining Gasoline, page 8.
3. Raise left side of mower at least 12 inches and remove drain plug, using a 12mm wrench.
4. Insert oil drain tube over drain opening and lower mower. Raise right side of mower until all oil has flowed into drain pan.
5. After draining, install drain plug and fill engine with fresh oil: refer to Fill Crankcase With Oil, page 4.

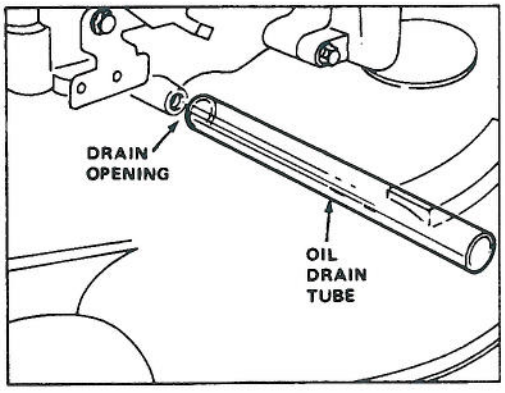

Figure 17

ADJUSTING WHEEL DRIVE (MODEL 20620)

If mower does not self-propel or has a tendency to creep forward when drive is not engaged, adjust wheel drive control knob on rear of gear box.

1. Close door in mower housing and remove bag.
2. ADJUSTMENT (Fig. 18) — Rotate control knob clockwise 1/2 turn if mower does not self-propel. If mower creeps forward, rotate knob 1/2 turn counterclockwise to loosen belt.

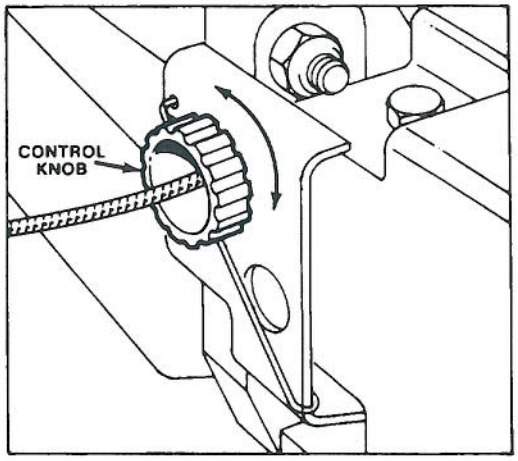

Figure 18

3. CHECK ADJUSTMENT — Slowly pull mower backward while control bar is gradually moved toward handle. Adjustment is correct when rear wheels stop turning and control bar is about 1-inch from handle (Fig. 19).
4. Repeat steps 2 and 3 until properly adjusted.

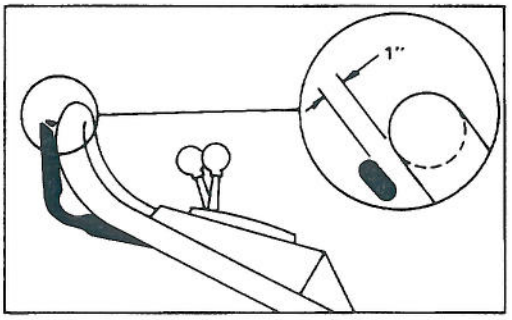

Figure 19

INSPECTING/REMOVING/SHARPENING BLADE

1. Stop engine and pull wire off spark plug.
2. Drain gasoline from fuel tank: refer to Draining Gasoline, page 8.
3. Tip mower on its right side (Fig. 20). Avoid rotating blade. Starting problems may result.

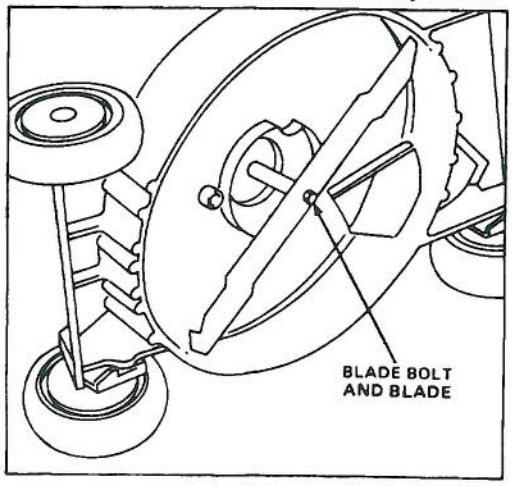

Figure 20

4. INSPECTING BLADE — Carefully examine blade for sharpness and wear, especially where flat and curved parts meet (Fig. 21A).

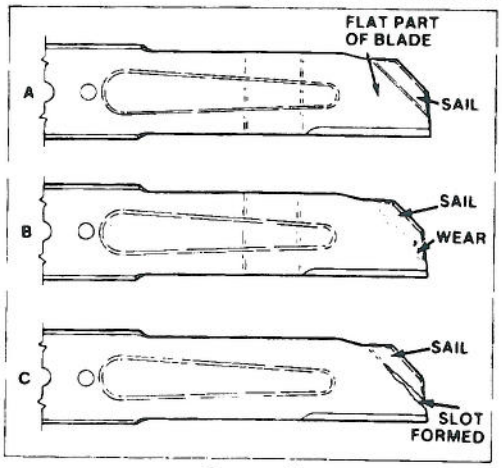

Figure 21

CAUTION

If blade is allowed to wear, a slot may form near the sail. Eventually a piece of blade may break off resulting in serious injury to yourself or a bystander.

Since sand and abrasive material can wear away the metal that connects the flat and curved parts of the blade, check blade before using the mower. If a slot or wear is noticed (Fig. 21B & C), replace blade. Refer to step 5.

5. REMOVING BLADE — Grasp end of blade using a rag or thickly padded glove. Remove blade bolt and blade (Fig. 20).

Note: For optimum performance, install new blade before cutting season begins. During the year file down small nicks to maintain the cutting edge.

6. SHARPENING BLADE — Using a file, sharpen top side of blade and maintain original cutting angle (Fig. 22). The blade will remain balanced if same amount of material is removed from both cutting edges.

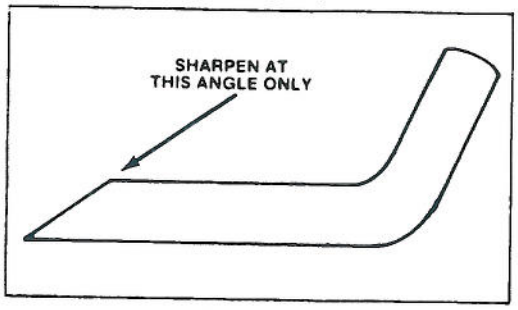

Figure 22

IMPORTANT: Check balance of blade by putting it on a blade balancer. An inexpensive balancer can be purchased at a hardware store. A balanced blade will stay in horizontal position and an unbalanced blade will settle to the heavy side. If blade is not balanced, file more metal off cutting edge on heavy end of blade.

7. Install sharp, balanced blade with blade bolt. Sail part of blade must point toward top of mower housing to assure correct installation. Tighten the blade bolt to 50 ft-lb (68 N·m).

LUBRICATION

After every 25 operating hours or when season ends, front and rear wheels must be lubricated.

1. Apply 2 or 3 drops of light oil on inside and outside of wheel bolts. Spin wheels to distribute oil into bushings. Wipe up excess oil.
2. Model 20620 only—Move rear wheel height-of-cut levers to "C" setting. Wipe grease fittings with clean rag (Fig. 23). Install grease gun onto fitting and gently apply 1 pump of #2 Multi-Purpose Lithium Base Grease. Excess pressure may damage seals.

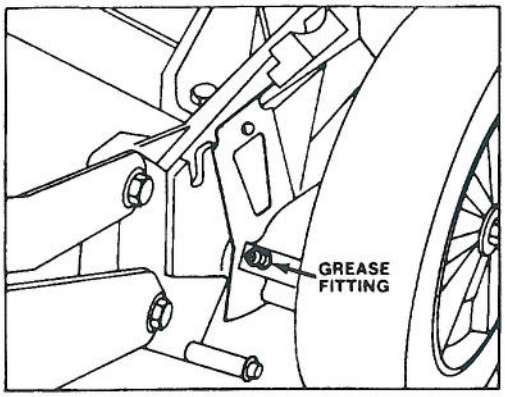

Figure 23

ADJUSTING BLADE BRAKE

Whenever a new blade brake cable assembly is installed, an adjustment is required.

1. Stop engine and pull wire off spark plug.

2. CHECK ADJUSTMENT (Fig. 24) — Move control bar toward handle until slack in wire is removed. Gap between brake lever and handle must be 3/16"-1/4". See step 3 for adjustment.

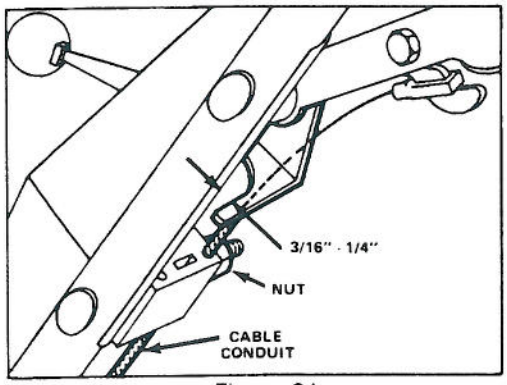

Figure 24

3. ADJUST CABLE CONDUIT — Loosen nut on cable bracket (Fig. 24). Insert 3/16"-1/4" object between brake lever and handle. Pull down on cable conduit until all slack is removed from wire. Then tighten nut.

ADJUSTING GROUND SPEED CONTROL FOR NEUTRAL (MODEL 20620)

Whenever a new ground speed control cable is installed or if mower drives when ground speed control is in "N", an adjustment is required.

1. Stop engine and remove grass bag.

2. Remove two cap screws and lift off transmission cover.

3. ADJUSTMENT (Fig. 25) — Loosen cable clamp screw until cable conduit slides. Push transmission control lever toward cable clamp screw and hold lever in place. Pull cable to remove slack and tighten clamp screw.

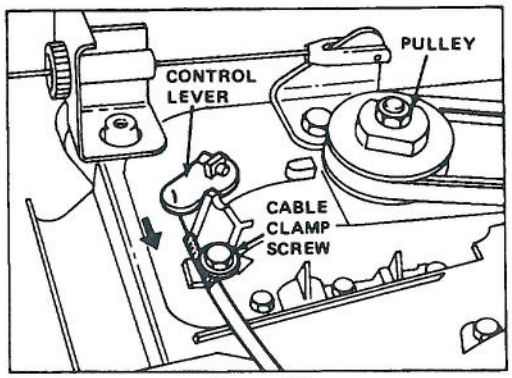

Figure 25

4. CHECK ADJUSTMENT — Assure ground speed control is in "N" and pull mower backward. Pulley (Fig. 25) should not rotate. If pulley does rotate, readjust for neutral: refer to step 3.

5. Install transmission cover and grass bag.

CLEANING MOWER HOUSING

To assure optimum performance, keep underside of mower housing and inside of discharge area clean.

1. Drain gasoline from fuel tank: refer to Draining Gasoline, page 8.

2. Tip mower on its right side (Fig. 26). Avoid rotating blade because starting problems may result.

3. Remove dirt and grass clippings that stick to housing by spraying it with a garden hose. Scrape out remaining debris with hardwood scraper. Avoid burrs and sharp edges.

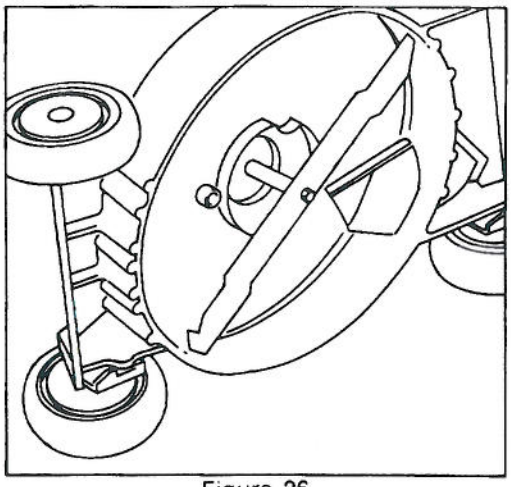

Figure 26

PREPARING MOWER FOR STORAGE

1. Drain gasoline: refer to Draining Gasoline, page 8. If gasoline is not drained, gum-like varnish deposits will form and cause poor engine operation, even starting problems.

2. Drain oil: refer to Changing Crankcase Oil, page 9. After oil is drained, do not fill crankcase with oil until the following steps (3-9) are completed.

3. Remove spark plug and pour 2 tablespoons of SAE 10W30 oil into hole in cylinder. Pull starter rope slowly to coat inside of cylinder. Install spark plug and tighten to 15 ft-lb (20.4 N m). DO NOT INSTALL HIGH TENSION WIRE ON SPARK PLUG.

4. Clean underside of housing: refer to Cleaning Mower Housing, page 11.

5. Check condition of blade: refer to Inspecting/Removing/Sharpening Blade, page 10.

6. Tighten all nuts, bolts and screws.

7. Clean dirt and chaff from cylinder, cylinder head fins and blower housing. Also remove grass clippings, dirt and grime from external parts of the engine, shrouding and top of mower housing.

8. Clean air cleaner: refer to Servicing Air Cleaner, page 8.

9. Lubricate the wheels: refer to Lubrication, page 10.

10. Touch up all rusted or chipped paint surfaces. Toro Re-Kote paint is available from an Authorized TORO Service Dealer.

11. Fill crankcase with oil: refer to Fill Crankcase With Oil, page 4.

12. Store mower in a clean dry place. Cover mower to keep it clean and protected.

OPTIONAL SPARK ARRESTOR — PART #56-6730

If a spark arrestor is required because of local, state or federal regulations, it may be purchased at your local Authorized TORO Service Dealer. If mower is operated on any California forest, brush or grass covered land without a properly operating spark arrestor, the operator is violating state law, Section 4442 Public Resources Code.

PRODUCT IDENTIFICATION

A model number and a serial number decal is located at rear of mower housing, near the discharge door. Always refer to specific numbers on this decal in correspondence or when replacement parts are needed.

TORO SERVICE SUPPORT

If help — concerning safety, set-up, operation and maintenance or troubleshooting — is ever needed, contact the local Authorized TORO Service Dealer or Distributor. Refer to the "Yellow Pages" for assistance. In addition to skilled service technicians, the dealer and distributor have factory approved accessories and replacement parts. Keep your Toro all TORO. Buy genuine TORO replacement parts and accessories.

MAINTENANCE RECORD

Date	Hours Used	Oil Change	Air Cleaner Service	Lubrication	Spark Plug	Winter Storage

MAINTENANCE RECORD

Date	Hours Used	Oil Change	Air Cleaner Service	Lubrication	Spark Plug	Winter Storage

TROUBLESHOOTING

Problem	Possible Causes	Corrective Action
Engine does not start.	1. Throttle not in CHOKE position. 2. Gas tank is empty. 3. Air cleaner element is dirty. 4. Spark plug is loose. 5. Spark plug wire is loose or disconnected from spark plug. 6. Spark plug gap is incorrect. 7. Spark plug is defective. 8. Carburetor is flooded with gasoline.	1. Move throttle to CHOKE. 2. Fill fuel tank with gasoline. 3. Clean air cleaner element. 4. Tighten spark plug to proper specification. 5. Install spark plug wire on spark plug. 6. Set air gap to proper specification. 7. Install new, correctly gapped plug. 8. Remove air cleaner element and pull starter rope continuously until carburetor clears itself and engine starts. When engine starts, stop it and install air cleaner element.
Engine starts hard or loses power.	1. Dirt, water or stale gas in fuel tank. 2. Vent hole in fuel tank cap is plugged. 3. Air cleaner is dirty.	1. Drain gas and clean fuel tank. Fill tank with clean, fresh gasoline. 2. Clean or replace fuel tank cap. 3. Clean the air cleaner element.
Engine operates erratically.	1. Spark plug is defective. 2. Spark plug gapped incorrectly. 3. Air cleaner is dirty.	1. Install new, correctly gapped plug. 2. Set air gap to proper specification. 3. Clean the air cleaner element.
Engine idles poorly.	1. Air cleaner is dirty. 2. Oil level in crankcase is low. 3. Air slots in engine shroud are plugged. 4. Cooling fins and air passages under engine blower housing are plugged.	1. Clean the air cleaner element. 2. Add oil to crankcase. 3. Remove obstruction from slots. 4. Remove obstruction from cooling fins and air passages.
Engine skips at high speed	1. Air gap between electrodes of spark plug is too close.	1. Set air gap to proper specification.
Engine overheats.	1. Cooling air flow is restricted. 2. Oil level in crankcase is low. 3. Incorrect spark plug. **Note:** A Toro Service Dealer may have to be consulted if any of the above causes have occurred.	1. Remove any obstruction from slots in shroud, blower housing, air passages, and cooling fins on engine. 2. Add oil to crankcase. 3. Install new, correctly gapped plug.
Mower vibrates abnormally.	1. Blade bolt is loose. 2. Cutter blade is unbalanced.	1. Tighten blade bolt to proper specification. 2. Sharpen cutter blade and check the balance. Replace the blade if it cannot be balanced.
No traction drive. (MODEL 20620)	1. Ground speed control adjusted incorrectly or broken. 2. Transmission drive belt loose or broken. 3. Traction Control Handle cable incorrectly adjusted or broken. 4. Damaged wheel and pinion gear assembly. 5. Malfunction in transmission assembly. **Note:** A Toro Service Dealer may have to be consulted if items 2-5 have occurred.	1. Adjust ground speed control or replace control. 2. Adjust belt tension or replace belt. 3. Adjust or replace cable. 4. Repair as necessary. 5. Repair as necessary.
Mower creeps forward—traction control handle disengaged. (MODEL 20620)	1. Debris caught between mower housing and transmission. (Belt under tension.) 2. Traction belt over-tensioned, i.e., belt not loose enough when disengaged.	1. Remove transmission cover and clear debris away. 2. Reduce belt tension.

The Toro Promise

A Two Year Limited Warranty
On All
Gasoline Powered Consumer Products

The Toro Company promises to repair these TORO Products if defective in materials or workmanship. The following time periods from the date of purchase apply:

Residential Product . . . . . 2 Years
Residential Products Used Commercially . . . 45 Days

The costs of parts and labor are included, but the customer pays the transportation costs. Just return any residential product to an Authorized TORO Service Dealer or TORO Distributor.

Should you feel your TORO is defective and wish to rely on The Toro Promise, the following procedure is recommended:

1. Contact any Authorized TORO Service Dealer, TORO Master Service Dealer, or TORO Distributor (the Yellow Pages of your telephone directory is a good reference source).
2. He will either instruct you to return the product to him or recommend another Authorized TORO Service outlet which might be more convenient.
3. Bring the product along with your original sales slip, or other evidence of purchase date, to the service dealer.
4. The servicing dealer will inspect the unit, advise you whether the product is defective and, if so, make all repairs necessary to correct the defect without extra charge to you.

If for any reason you are dissatisfied with the dealer's analysis of the defect or the service performed, you may contact us.

Write:

TORO Customer Service Department
8111 Lyndale Avenue South
Minneapolis, Minnesota 55420

The above remedy of product defects through repair by an Authorized TORO Service Dealer is the purchaser's sole remedy for any defect.

THERE IS NO OTHER EXPRESS WARRANTY. ALL IMPLIED WARRANTIES OF MERCHANTABILITY AND FITNESS FOR USE ARE LIMITED TO THE DURATION OF THE EXPRESS WARRANTY.

Some states do not allow limitations on how long implied warranty lasts, so the above limitation may not apply to you.

This Warranty applies only to parts or components which are defective and does not cover repairs necessary due to normal wear, misuse, accidents, or lack of proper maintenance. Regular, routine maintenance of the unit to keep it in proper operating condition is the responsibility of the owner.

All warranty repairs reimbursable under The Toro Promise must be performed by an Authorized TORO Service Dealer using Toro approved replacement parts.

Repairs or attempted repairs by anyone other than an Authorized TORO Service Account are not reimbursable under The Toro Promise. In addition, these unauthorized repair attempts may result in additional malfunctions, the correction of which is not covered by warranty.

THE TORO COMPANY IS NOT LIABLE FOR INDIRECT, INCIDENTAL OR CONSEQUENTIAL DAMAGES IN CONNECTION WITH THE USE OF THE PRODUCT INCLUDING ANY COST OR EXPENSE OF PROVIDING SUBSTITUTE EQUIPMENT OR SERVICE DURING PERIODS OF MALFUNCTION OR NON-USE.

Some states do not allow the exclusion of incidental or consequential damages, so the above exclusion may not apply to you.

This warranty gives you specific legal rights, and you may also have other rights which vary from state to state.

COUNTRIES OTHER THAN THE UNITED STATES OR CANADA

Customers who have purchased TORO products exported from the United States or Canada should contact their TORO Distributor (Dealer) to obtain guarantee policies for your country, province or state. If for any reason you are dissatisfied with your Distributor's service or have difficulty obtaining guarantee information, contact the TORO importer. If all other remedies fail, you may contact us at The Toro Company.

Compliance with Radio Interference Regulations Certified.
Certifie Conforme au Reglement sur le Brouillage Radioelectrique.

Litho in U.S.A.