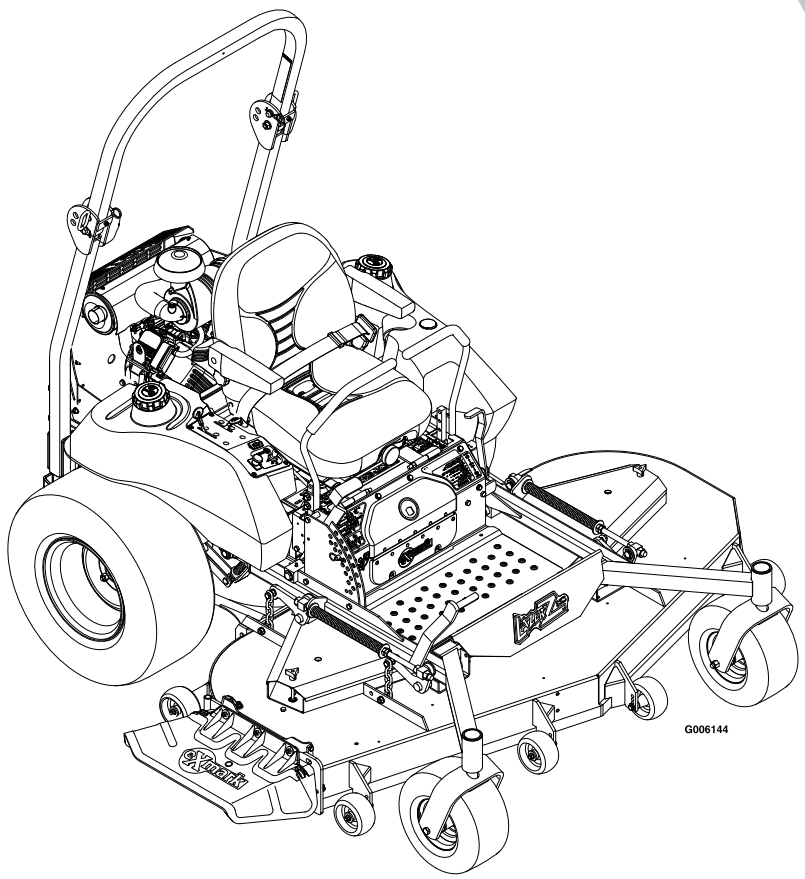

LAZER Z® XS

AIR-COOLED MODELS

Parts Manual

For Serial Nos.
790,000 & Higher
Part No. 4500-377 Rev. C

EXMARK PARTS PLUS

PARTS OVERNIGHT OR FREE*

If your Exmark dealer does not have the Exmark part in stock, Exmark will get the parts to the dealer the next business day or the part will be FREE Guaranteed!! (Some restrictions apply. See your participating Exmark Dealer for details.)

WARNING

READ OPERATOR'S MANUAL BEFORE OPERATING OR SERVICING EXMARK EQUIPMENT.

TABLE OF CONTENTS

Description	Page
Deck Group	3-4
Decal Group	17-18
Electrical Diagram	20
Electrical Group	19
Electrical Logic Schematic	21
Engine Deck Group	14
Front Frame Group	7-8
Fuel Group	11
Hydraulic Group	15-16
Main Frame Group	9-10
Motion Control Group	13
Park Brake Group	12
Spindle Assembly	5
Upper Frame Group	6

DECK GROUP

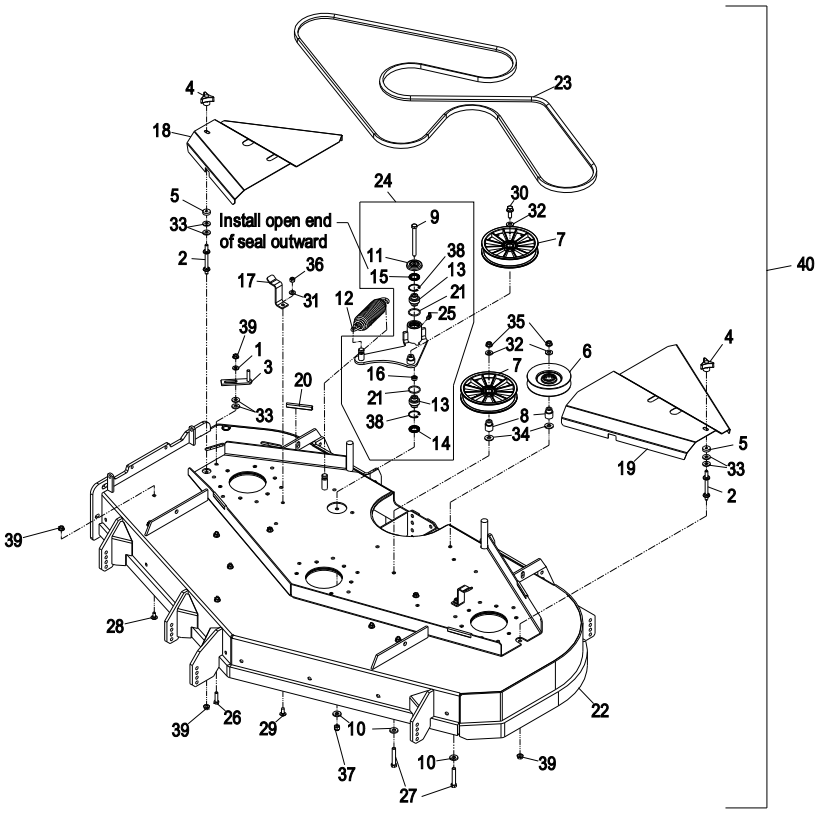

Item	Part No.	Description	Qty.
1	1-303334	Washer, Spring Disc 5/16	1
2	1-303537	Stud, Belt Shield	2
3	1-322110	Wld, Belt Guide	1
4	1-323385	Knob	2
5	1-323417	Washer, Belt Shield	2
6	1-603805	Sheave, Idler	1
7	109-2796	Pulley, Idler	2
8	1-633456	Bushing, Idler	2
9	98-5961	Screw, HH 3/8-16 x 4 Gr8	1
10	98-5975	Washer, Spring Disc 3/8	3
11	103-2916	Guard, Top	1
12	116-0133	Spring	1
13	103-3504	Bearing, Spherical	2
14	103-3505	Seal, Double Lip	1
15	103-3506	Seal, Single Lip	1
16	103-5677	Spacer	1
17	103-8103-01	Latch, Belt Shield	2
18	109-2097	Asm, Shield W/Decal 60" RH	1
	109-2133	Asm, Shield W/Decal 66" RH	1
	109-2135	Asm, Shield W/Decal 72" RH	1
19	109-2096	Asm, Shield W/Decal 60" LH	1
	109-2132	Asm, Shield W/Decal 66" LH	1
	109-2134	Asm, Shield W/Decal 72" LH	1
20	105-7699	Strip-Seal, 3"	4
21	106-7159	O-Ring	2

Item	Part No.	Description	Qty.
22	109-2100	Asm, Deck W/Decals 60"	1
	109-2103	Asm, Deck W/Decals 66"	1
	109-2105	Asm, Deck W/Decals 72"	1
23	1-633127	Belt 60”	1
	109-5018	Belt 66”	1
	1-643052	Belt 72”	1
24✖	109-2095	Kit, Idler Arm W/Bearings	1
25	302-40	Zerk, 90° 1/4-28	1
26	322-6	Screw, HH 5/16-18 x 1 1/4	1
27	323-11	Screw, HH 3/8-16 x 2 1/4	2
28	3230-18	Bolt, Carriage 5/16-18 x 5/8	9
29	3230-22	Bolt, Carriage 5/16-18 x 1	2
30	3234-11	Screw, HH FLG 3/8-16 x 1	1
31	3256-23	Washer, 5/16 SAE	2
32	3256-24	Washer, 3/8 SAE	3
33	3256-3	Washer, 5/16 Std	6
34	3256-4	Washer, 3/8 Std	2
35	3290-357	Nut, Whizlock 3/8-16	2
36	3296-29	Nut, Nyloc 5/16-18	2
37	3296-39	Nut, Nyloc 3/8-16	1
38	32120-10	Ring, Retaining	2
39	32128-20	Nut, Whizlock 5/16-18	12
40▲	109-2380	Asm, Deck Complete 60”	1
	109-2381	Asm, Deck Complete 66”	1
	109-2382	Asm, Deck Complete 72”	1

Exmark red touch up paint (spray paint - P/N 1-850337 - .6 oz liquid bottle - P/N 103-9140).

▲ Complete deck assembly includes all items from pages 3 – 5 except items (#8, #16, #28, #31,#38, and #40 from page 4) and includes mule drive belt from page 14.

✖ Kit also includes items #10 & #37.

DECK GROUP (cont.)

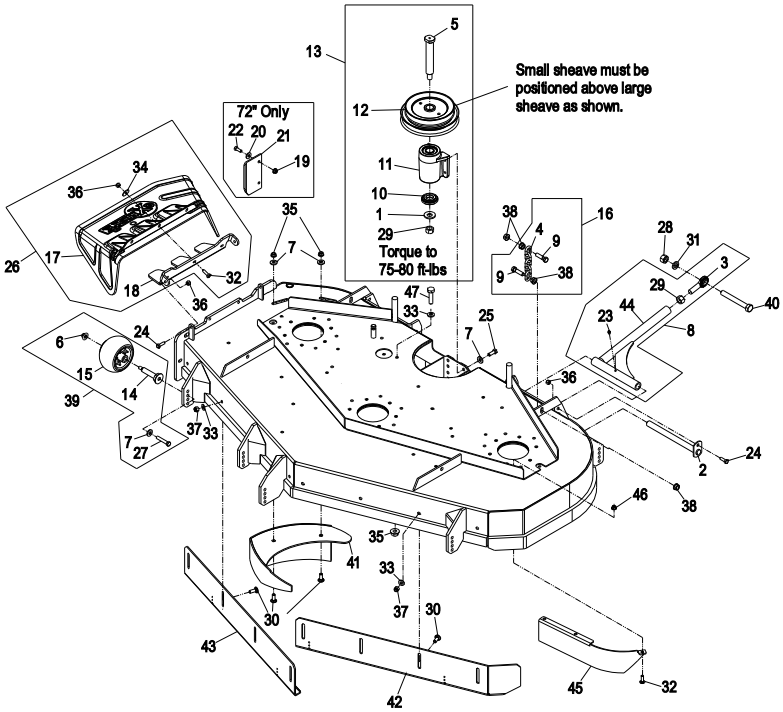

Item	Part No.	Description	Qty.
1	1-513208	Washer, Spring Disc 5/8	1
2	1-632199-01	Wld, Pin Deck Strut	2
3	1-633029	Balljoint	2
4	1-633447	Chain, Deck Lift	4
5●	1-643393	Jackshaft, Lazer	1
6	109-6658	Nut, Nyloc 3/8-16 Flg	6
7	98-5975	Washer, Spring Disc 3/8	12
8	103-8543	Asm, Strut 60”	2
	103-8544	Asm, Strut 66” & 72”	2
9	103-1898	Screw, HH 7/16-20 x 1-5/8 Sp	8
10	103-2535	Spacer, Guard Bottom	1
11●	103-9746	Asm, Jackshaft Housing	1
12●	103-3046	Sheave, Jack Shaft- Double	1
13	103-3249	Asm, Jackshaft	1
14	109-9851	Axle, Anti-Scalp Roller	6
15	103-8415	Roller, Anti-Scalp	6
16	103-9792	Asm, Chain Deck	4
17	109-2739	Chute, Discharge LZ	1
18	109-0498-01	Hinge, Grass Discharge	1
19	32128-20	Nut, Whizlock 5/16-18 72”	2
20	3256-3	Washer, 5/16 Std 72”	2
21	103-9423-01	Deflector, Discharge 72”	1
22	322-4	Screw, HH 5/16-18 x 7/8 72”	2
23	302-19	Zerk, 1/4-28 Str	4
24	322-5	Screw, HH 5/16-18 x 1	4
25	323-6	Screw, HH 3/8-16 x 1	4
26	109-2099	Asm, Discharge Chute	1
27	3211-46	Screw, HH 3/8-24 x 2 Gr8	6
28	3217-11	Nut, Hex 5/8-11	2

Item	Part No.	Description	Qty.
29	3219-6	Nut, Hex 5/8-18	3
30	3231-22	Bolt, Carriage 3/8-16 x 1	10
31	3253-8	Washer, Lock 5/8	2
32	3230-22	Bolt, Carriage 5/16-18 x 1	6
33	3256-24	Washer, 3/8 SAE	9
34	3256-82	Washer	3
35	3290-357	Nut, Whizlock 3/8-16	3
36	3296-29	Nut, Nyloc 5/16-18	7
37	3296-39	Nut, Nyloc 3/8-16	8
38	32128-37	Nut, Whizlock 7/16-14	16
39	109-2098	Kit, Anti-Scalp Roller	6
40	327-28	Screw, HH 5/8-11 x 5 1/2	2
41	109-0694-01	Wld, Dogleg 60”	1
	109-0821-01	Wld, Dogleg 66”	1
	109-1039-01	Wld, Dogleg 72”	1
42	109-0701-01	Wld, Baffle Front Adj LH 60”	1
	109-0822-01	Wld, Baffle Front Adj LH 66”	1
	109-1044-01	Wld, Baffle Front Adj LH 72”	1
43	109-0704-01	Wld, Baffle Front Adj RH 60”	1
	109-0823-01	Wld, Baffle Front Adj RH 66”	1
	109-1047-01	Wld, Baffle Front Adj RH 72”	1
44	109-1184	Wld, Deck Strut-Std 60”	2
	109-1183	Wld, Deck Strut-Std 66” & 72”	2
45	109-5424-01	Baffle, Scroll 60”	1
	109-5531-01	Baffle, Scroll 66”	1
	109-5532-01	Baffle, Scroll 72”	1
46	104-8300	Nut, Nyloc 5/16-18 Flg	3
47	323-4	Screw, HH 3/8-16 x 3/4	1

Exmark red touch up paint (spray paint - P/N 1-850337 - .6 oz liquid bottle - P/N 103-9140).

- Apply Mobil HTS grease (P/N 103-5217 1.5 oz packet) (or a food-grade antisieze) between the jackshaft and bearings and jackshaft and sheaves. DO NOT use a copper or nickel based antisieze.

SPINDLE ASSEMBLY

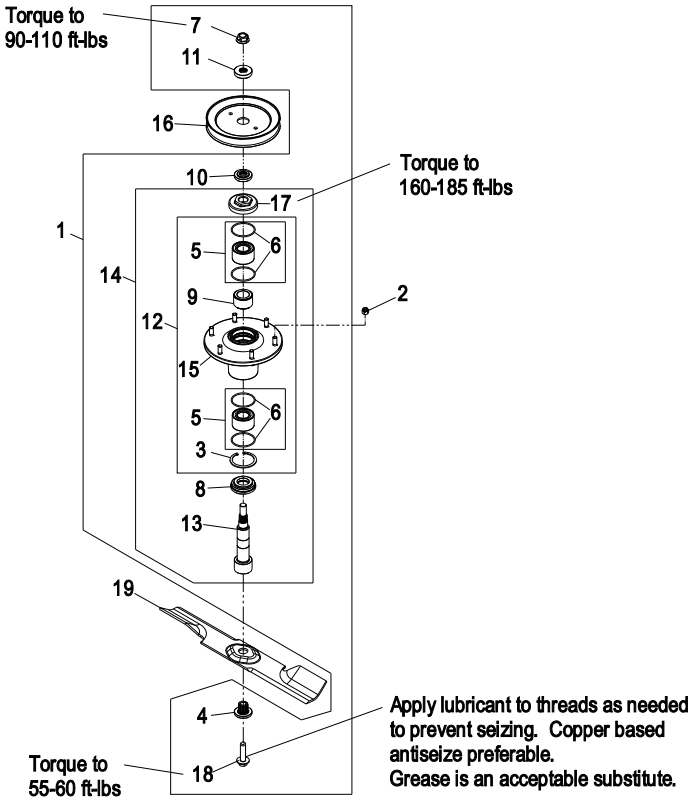

Item	Part No.	Description	Qty.
1	109-2102	Asm, Cutter Housing Complete	3
2	3296-39	Nut, Nyloc 3/8-16	18
3	92-5581	Retaining Ring, Internal	3
4	103-3037	Bushing, Splined	3
5	109-2064	Asm, Bearing W/O-Rings	6
6	103-5895	O-Ring	12
7	109-7033	Nut, Flange 5/8-18 Centerlock	3
8	103-9504	Guard, Bottom	3
9	103-9506	Spacer, Bearing	3
10	103-9522	Spacer, Splined Stepped	3
11	103-9523	Spacer, Splined	3
12	103-9539	Asm, Cutter Housing	3
13●	109-6881	Spindle, Double Spline	3
14	109-6917	Asm, Spindle Housing	3
15	109-0764	Asm, Housing W/Studs	3
16	109-1023	Sheave, Blade Drive 60”	3
	109-0914	Sheave, Blade Drive 66”	3
	109-0929	Sheave, Blade Drive 72”	3
17	109-1058	Nut, Spindle 7/8-14	3

Item	Part No.	Description	Qty.
18	109-9220	Screw, SEMS 1/2-20 x 2.19	3
19	103-8240	Blade, Low Lift 60"	3
	103-8396	Blade, Medium Lift 60"	3
	103-8239	Blade, High Lift Solid 60"	3
	109-6463	Blade, High Lift Notched 60"	3
■	109-5396	Blade, Mulch 60"	3
	103-9629	Blade, Extreme 60”	3
	103-9616	Blade, Low Lift 66"	3
	103-9619	Blade, Medium Lift 66"	3
	103-9617	Blade, High Lift Solid 66"	3
	109-6464	Blade, High Lift Notched 66"	3
■	109-5878	Blade, Mulch 66"	3
	103-9630	Blade, Extreme 66”	3
	103-9622	Blade, Low Lift 72"	3
	103-9625	Blade, Medium Lift 72"	3
	103-9623	Blade, High Lift Solid 72"	3
	109-6465	Blade, High Lift Notched 72"	3
■	109-5879	Blade, Mulch 72"	3
	103-9631	Blade, Extreme 72”	3

Exmark red touch up paint (spray paint - P/N 1-850337 - .6 oz liquid bottle - P/N 103-9140).

■ Requires installation of Micro-Mulch accessory for proper mulching. Mulch kit P/N MK605 (60”), MK665 (66”), and MK725 (72”).

● Apply Mobil HTS grease (P/N 103-5217 1.5 oz packet) (or a food-grade antiseize) between the spindles and bearings. DO NOT use a copper or nickel based antisieze.

UPPER FRAME GROUP

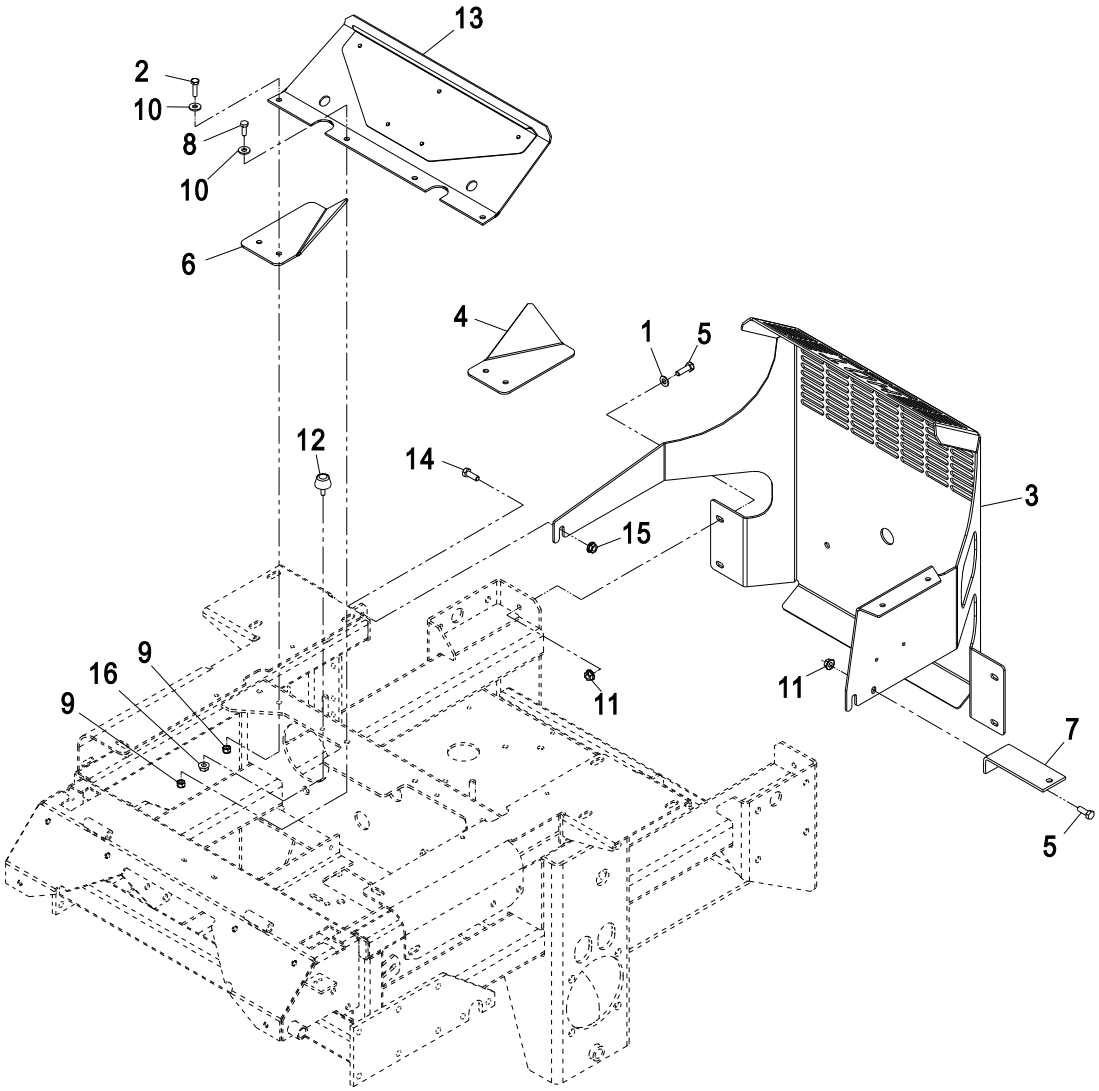

Item	Part No.	Description	Qty.
1	3256-23	Washer, 5/16 SAE	4
2	321-6	Screw, HH 1/4-20 x 1	2
3	109-7428-03	Guard, Rear	1
4	103-6620-03	Support, Front Cover (LH)	1
5	322-3	Screw, HH 5/16-18 x 3/4	5
6	103-6619-03	Support, Front Cover (RH)	1
7	109-0089-03	Bracket, Hyd Tank	1
8	321-4	Screw, HH 1/4-20 x 3/4	2

Item	Part No.	Description	Qty.
9	3296-42	Nut, Nyloc 1/4-20	4
10	3256-2	Washer, 1/4 Std	4
11	32128-20	Nut, Whizlock 5/16-18	5
12	109-2365	Bumper	2
13	116-0134	Asm, Front Eng Cover W/Decals	1
14	323-6	Screw, HH 3/8-16 x 1	2
15	3290-357	Nut, Whizlock 3/8-16	2
16	32128-33	Nut, Whizlock 1/4-20	2

Exmark black touch up spray paint – gloss black.

FRONT FRAME GROUP

Item	Part No.	Description	Qty.
1▲	109-2072	Asm, Front Frame (60")	1
▲	109-2073	Asm, Front Frame (66")	1
▲	109-2074	Asm, Front Frame (72")	1
2	302-19	Zerk, 1/4-28 Straight	5
3	109-1903	Asm, Floorpan (103-8274-01) W/Decals	1
4	1-543509	Bearing Cone, Tapered Roller	4
5	103-2084	Asm, Lever (103-2083-03)W/Grip	1
6	1-633295	Grip, Lift Lever	1
7	103-9529-03	Arm Wldmt, Deck Lift	1
8	1-633325	Spring, Compression	1
9	3256-24	Washer, 3/8 SAE Flat	1
10	3296-39	Nut, Nyloc 3/8-16	4
11	32151-103	E-Ring	5
12	1-633068	Arm, Deck Lift	2
13	1-633889-01	Plate, Deck Lift	1
14	109-1900	Plate, Deck Lift W/Decal	1
15	1-633082	Bushing, Lift Lever	1
16	109-3193	Stop, Deck Height	1
17	323-13	Screw, 3/8-16 x 2 3/4	1
18	1-633097	Hitch Pin W/Lanyard	1
19	1-806005	Hairpin Cotter	1
20	323-9	Screw, 3/8-16 x 1 3/4	2
21	98-5975	Washer, 3/8 Disc Spring	12
22	3290-357	Nut, Whizlock 3/8-16	15
23	323-6	Screw, 3/8-16 x 1	1
24	323-7	Screw, 3/8-16x1 1/4	12
25	3256-29	Washer, 7/8 SAE Flat	4
26	1-633096	Rod, Deck Lift	2
27	3217-11	Nut, 5/8-11 Regular	6
28	1-633441	Swivel, Deck Mount	4

Item	Part No.	Description	Qty.
29	3256-7	Washer, 5/8 Std Flat	4
30	109-4963	Spring, Deck Support	2
31	103-4882	Cap, Grease	2
32	3218-6	Jam Nut, 5/8-11	6
33	109-1902	Asm, Floorpan, Liftout (103-8276-01) W/Decal	1
34	1-543511	Seal, Grease	2
35	103-1474-01	Caster Wldmt	2
36	3296-51	Nut, 3/4-10 Nyloc	2
37	1-633508	Washer, Spring Disc	6
38	325-39	Screw, 1/2-13 x 9 1/2	2
39	1-811010	Plug	2
40	103-2768	Guard, Seal	4
41	3296-23	Nut, 1/2-13 Nyloc	2
42	3230-1	Bolt, Carriage 5/16-18 x 3/4	4
43	103-0063	Seal, Bearing	4
44	1-633585	Bearing Cone	4
45	32128-20	Nut, Whizlock 5/16-18	4
46	103-5156	Axle, Caster	2
47	103-1918	Bushing	2
48	323-29	Screw, 3/8-16 x 1 3/8	2
49	32151-29	Ring, Retaining	2
50	3274-18	Screw, Socket HD5/16-18x1 1/4	2
51	1-543508	Bearing Cup, Tapered Roller	4
52✚	103-3051	Spacer, Nut	4
53	103-3799	Asm, Caster Wheel (Semi-Pneumatic)	2
54	3218-2	Jam Nut, 5/16-18	2
55	103-9741-01	Weldmt, Front Lift Shaft (LH)	1
56	103-9740-01	Weldmt, Front Lift W/Lever(RH)	1
57	1-523157	Washer, Spacer	2
58	109-4995	Asm, Front Frame Spring	2

Exmark red touch up paint (spray paint - P/N 1-850337 - .6 oz liquid bottle - P/N 103-9140).

✚ Use Pro-Lock, Nut Type (P/N 1-840022, .5ml tube) on spacer nut, Item #52.

▲ Includes frame weldment plus items #2, #31, #34, #39, #49, #51, #55, #56 and #57.

FRONT FRAME GROUP

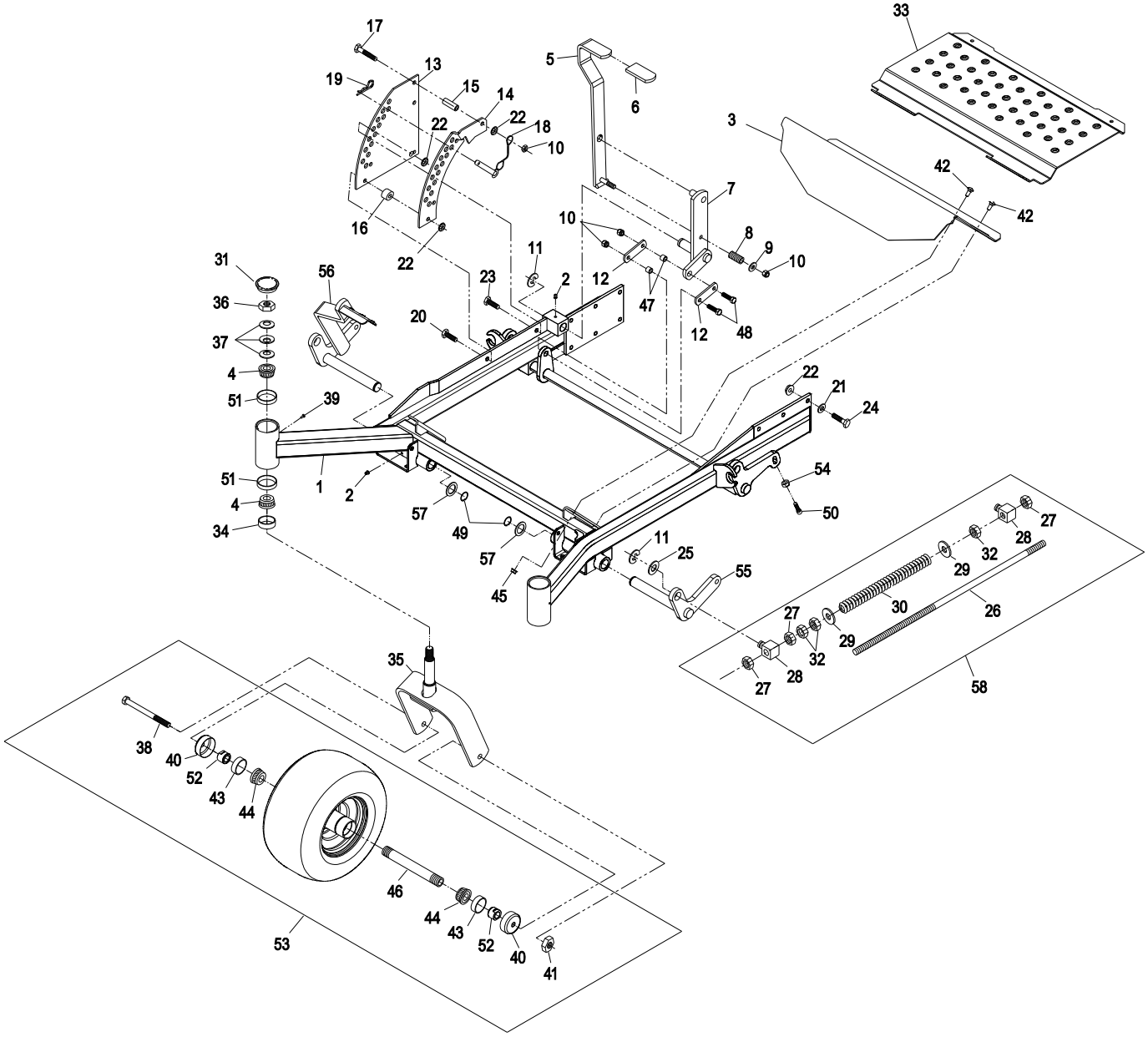

MAIN FRAME GROUP

Item	Part No.	Description	Qty.
1	1-513658	Bumper	2
2	1-633964-03	Stop, Park Brake	1
3	322-5	Screw, HH 5/16-18 x 1	4
4	323-39	Screw, HH 3/8-16 x 5	2
5	3296-29	Nut, Nyloc 5/16-18	4
6	3296-39	Nut, Nyloc 3/8-16	3
7	32128-20	Nut, Whizlock 5/16-18	4
8	323-6	Screw, HH 3/8-16 x 1	2
9	3290-357	Nut, Whizlock 3/8-16	10
10	103-5519	Spring	1
11	242-50	Nut, Lug 1/2-20	8
12	109-3157	Asm, Wheel & Tire.	2
	103-4963	Tire, 26x12-12 4 Ply	2
	109-3156	Wheel	2
13	109-3972	Asm, Engine Deck (109-3973-03) W/Decals	1
14	103-5161	Link, XP Seat Stop	2
15	107-1881	Kit, Knob	1
16▲	116-1080	Seat, Suspension	1
	109-3343	Kit, Spring and Saddle	1
	109-3344	Kit, Back Panel	1
	109-3345	Kit, Weight Adjust	1
17	1-633872-03	Stop, Seat	2
18	107-1885	Kit, Weight Indicator	1
19	107-0075	Bushing	1
20	109-1357	Link, XP Lower Seat Stop	2
21	103-3666	Asm, Cubby	1
22	32122-28	Screw, Truss HD #10-24 x 1	4
23	3296-2	Nut, Nyloc #10-24	8
24	3256-4	Washer, 3/8 Std	1

Item	Part No.	Description	Qty.
25	107-1880	Kit, Seat Track	1
26	103-3790	Latch, Cubby Door	1
27	3290-500	Screw, PPH #10-24 x 5/8	2
28	109-2075	Asm, Console(103-8273-03) W/Decals	1
29	322-3	Screw, HH 5/16-18 x 3/4	6
30	3256-23	Washer, 5/16 SAE	6
31	103-5520	Latch, Seat	1
32	3256-14	Washer, #10 Std	8
33	1-803075	Screw, Truss Head #10-24 x 3/4	2
34	98-5975	Washer, Spring Disc 3/8	8
35	323-6	Screw, HH 3/8-16 x 1	8
36◆	109-0060	Kit, XP Rops	1
37	107-1883	Kit, Bottom Cushion	1
38	82-2190	Kit, Switch	1
39	107-1887	Kit, Armrest	1
40	107-1884	Kit, Shock Absorber	1
41	107-1882	Kit, Back Cushion	1
42	110-0883	Kit, Seat Belt	1
43	3212-4	Screw, HH 7/16-20 x 1.0	2
44	1-603610	Washer, Spring Disc 7/16	2
45	107-3155	Cotter, Hair Pin Double Loop	2
46	325-13	Screw, HH 1/2-13 x 3 1/4	2
47■	103-4553	Asm, Rops Fold Pin	2
48	32128-23	Nut, Hex Flange Side Lock 1/2-13	2
49	109-2365	Bumper	4
50	3296-73	Nut, Nyloc 1/4-20 (black)	2
51	3296-42	Nut, Nyloc 1/4-20	2
52	109-1813	Asm, Seat Frame	1
53	323-9	Screw, HH 3/8-16 x 2	1

Exmark black touch up spray paint – Gloss black

■ Includes ROPS fold pin plus hairpin, item #45.

◆ Rollover protection frame is serviced as a complete assembly only. Includes complete ROPS frame, mounting hardware, fold pivot and locking hardware, seat frame assembly item #52, and seat belt assembly item #42.

▲ Includes seat assembly plus tracks item #25, seat stops item #17, and seat wiring harness (item #17 pg. 19). Does not include seat belt assembly item #42.

MAIN FRAME GROUP

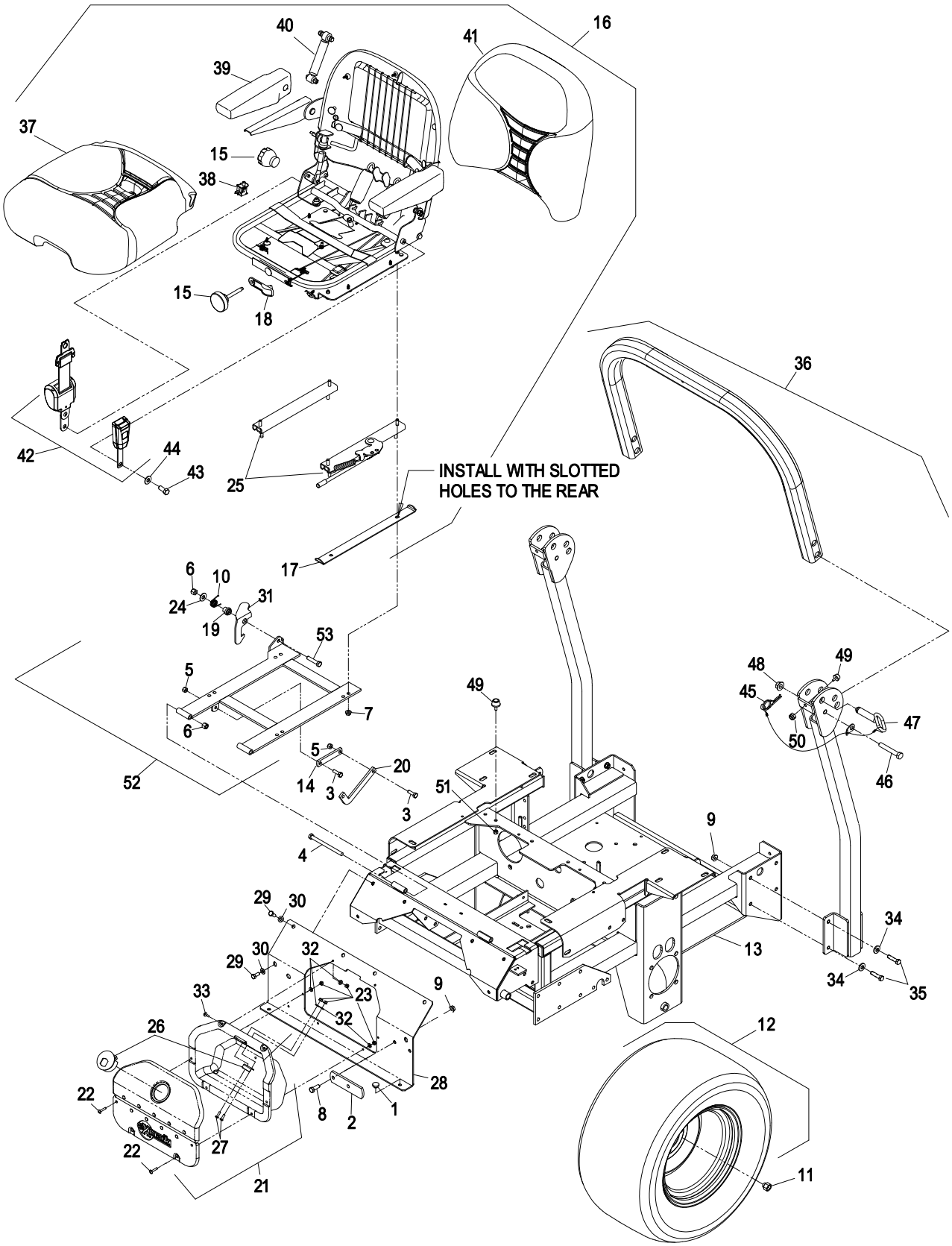

FUEL GROUP

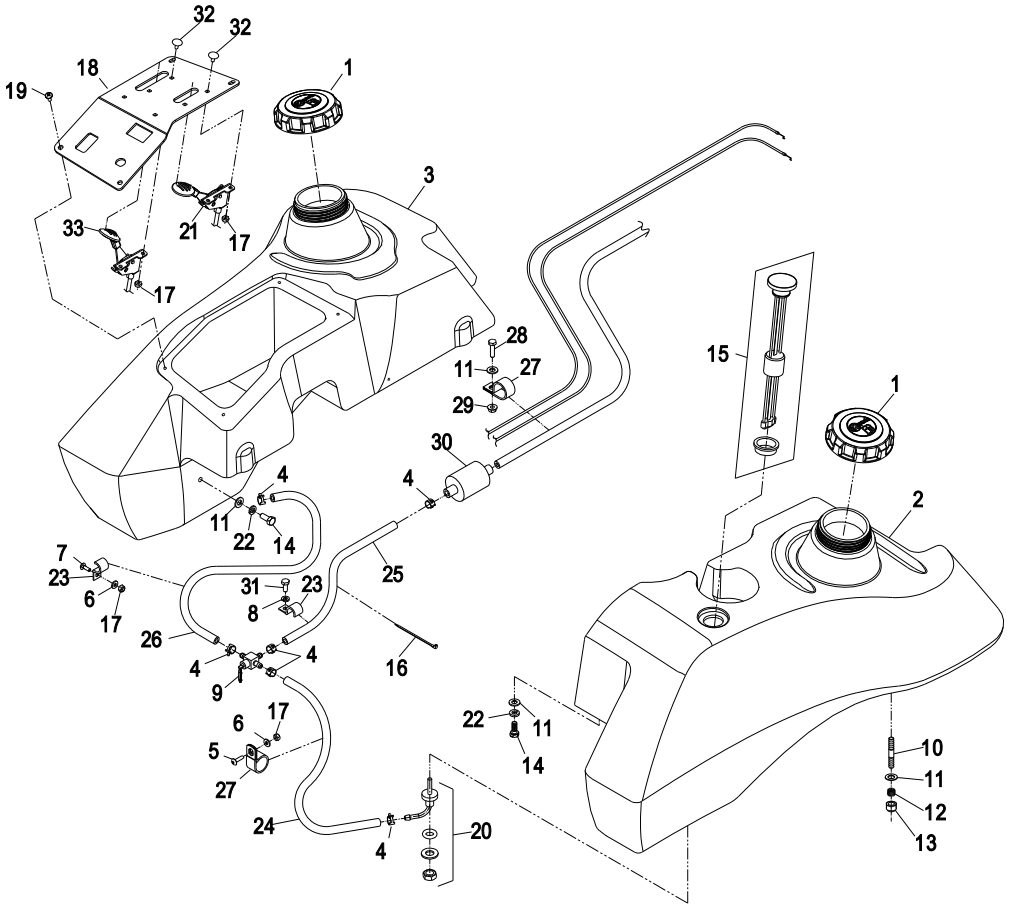

Item	Part No.	Description	Qty.
1	109-0346	Cap, Fuel Tank	2
2✳	103-7510	Asm, Fuel Tank (LH)	1
3✳	103-7511	Asm, Fuel Tank (RH)	1
4	1-303077	Clamp, Fuel Line	6
5	1-803075	Screw, Truss HD #10-24 x 3/4	1
6	3256-14	Washer, #10 Std	2
7	1-807533	Bolt, Carriage #10-24 x 5/8	1
8	1-805004	Washer, Lock 1/4 Heavy	1
9	1-633347	Valve, Fuel	1
10◆	1-633023	Stud, Fuel Tank	6
11	3256-23	Washer, Flat SAE 5/16	11
12	1-633349	Spring, Fuel Tank	6
13	3296-47	Nut, Nyloc 5/16-18 Thin	6
14	322-3	Screw, 5/16-18 x 3/4	4
15	103-6564	Kit, Fuel Gauge	1
16	1-303335	Tie, Cable 7 15/16 (Large)	1
17	3296-2	Nut, Nyloc #10-24	6
18	109-4512	Asm, Control Panel (109-4214-03) W/Decals	1

Item	Part No.	Description	Qty.
19▼	109-2661	Screw, PPH #10-24 x 1/2	4
20★	103-2605	Fitting, Fuel Bulkhead	2
	103-2784	O-Ring	1
21	109-3987	Control, Throttle	1
22	1-805005	Washer, Lock 5/16	4
23	103-1193	Clip, Loom Half	2
24	109-0275	Hose, Fuel Line 32"	1
25	109-0305	Hose, Fuel Line 13 3/4"	1
26	109-0302	Hose, Fuel Line 24"	1
27	1-643312	Clip, Loom	2
28	322-4	Screw, HH 5/16-18 x 7/8	1
29	32128-20	Nut, Whizlock 5/16-18	1
30●	**Briggs & Stratton**	P/N 695327 Fuel Filter	1
31	321-3	Screw, HH 1/4-20 x 5/8	1
32	1-807513	Bolt, Carriage #10-24 x 1/2	4
33	109-4210	Control, Choke	1

◆ Use Pro-Lock, Retaining type (Part No. 1-840023), .5cc tube on stud threads going into the tank.

● Refer to Engine Owner's Manual.

▼ Snug fit only on slotted holes, **Do Not Overtighten,** tank must be able to expand.

★ Use Prolock, Nut type (Part No. 1-840022), .5ml tube on fuel fitting.

✳ Includes tank, cap, fittings, and studs. LH tank also includes fuel gauge.

PARK BRAKE GROUP

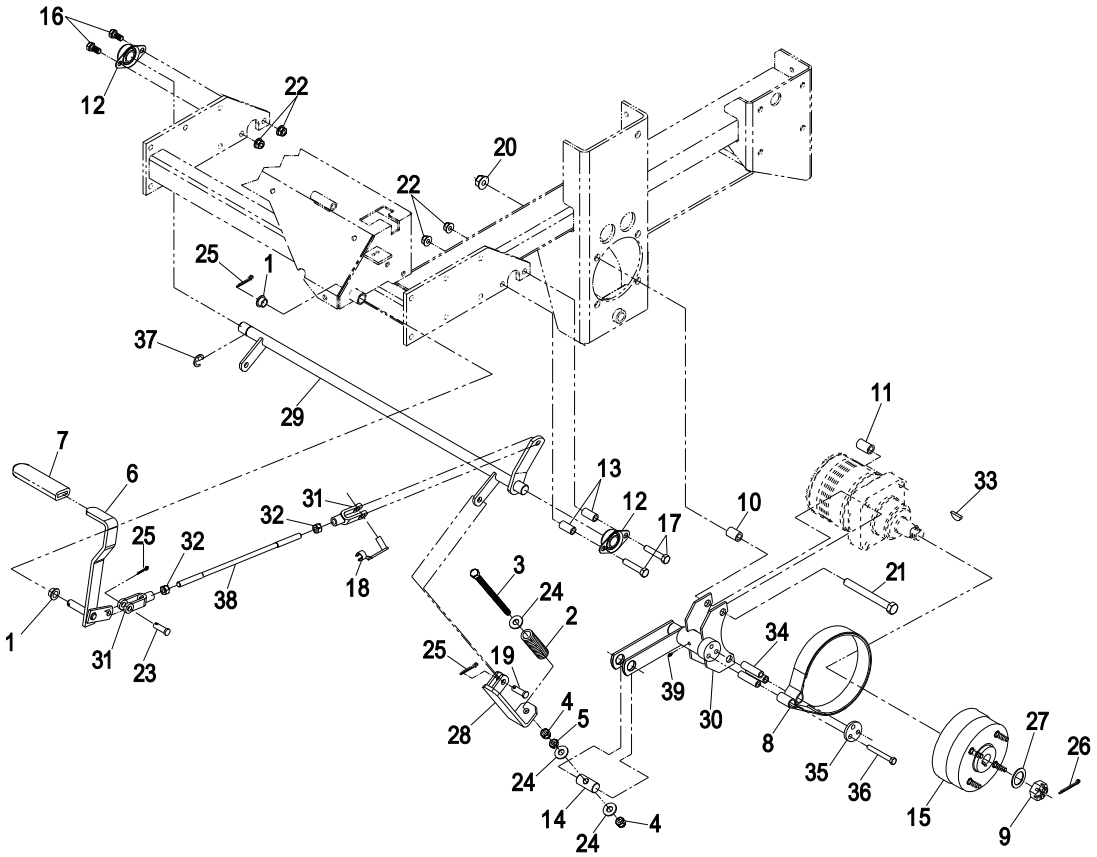

Item	Part No.	Description	Qty.
1	1-513140	Bushing	2
2	109-2230	Spring, Brake Rod	2
3	323-58	Bolt, HH 3/8-16 x 6 Tap	2
4	3296-39	Nut, Nyloc 3/8-16	4
5	3218-3	Nut, Jam 3/8-16	2
6	103-0197	Asm, Lever (103-0201-03) W/Grip	1
7	1-633268	Grip, Brake Lever	1
8	103-9761	Band, Brake	2
9	1-809036	Nut, Slotted 1-20	2
10	1-633380	Spacer (Short)(60”)	4
	109-5011	Spacer (Short)(66” & 72”)	4
11	1-633382	Spacer (Long)(60”)	4
	109-5012	Spacer (Long)(66” & 72”)	4
12	1-633102	Bearing, Flange	2
13	103-0051	Spacer, Brake Retainer	2
14	1-633144	Pin, Trunion	2
15	103-0590	Asm, Wheel Hub W/Studs & Drum	2
◆	1-633926	Studs, Wheel	8
16	323-4	Screw, HH 3/8-16 x 3/4	2
17	323-10	Screw, HH 3/8-16 x 2	2
18	103-2399	Pin, Clevis Spring 3/8	1
19	1-808284	Pin, Clevis 3/8 x 1	2

Item	Part No.	Description	Qty.
20	32128-49	Nut, Whizlock 1/2-13	8
21	325-17	Screw, HH 1/2-13 x 4 (60”)	8
	325-22	Screw, HH 1/2-13 x 5 1/2 (66” & 72”)	8
22	3290-357	Nut, Whizlock 3/8-16	4
23	1-808285	Pin, Clevis 3/8 x 1 1/8	1
24	3256-4	Washer, 3/8 Std	6
25	3272-10	Pin, Cotter 1/8 x 3/4	4
26	1-806800	Pin, Cotter 9/64 x 1 1/2	2
27	1-523157	Washer, Spacer	2
28	103-1117-03	Lower Brake Linkage	2
29	103-5243-03	Brake Shaft	1
30	103-0844-03	Bracket, Brake (60”)	2
	103-0810-03	Bracket, Brake (66” & 72”)	2
31	1-633131	Yoke	2
32	3219-3	Nut, Hex 3/8-24	2
33	3257-42	Key, Woodruff 5/16 x 1	2
34	103-0384	Spacer	6
35	103-0374	Retainer, Brake Band	2
36	322-9	Screw, HH .312-18 x 1.75	6
37	32151-48	E-Ring	1
38	103-1708	Rod, Brake	1
39	1481	Zerk, 45° 1/4-28	2

Exmark black touch up spray paint – Gloss black

◆ Not Illustrated

MOTION CONTROL GROUP

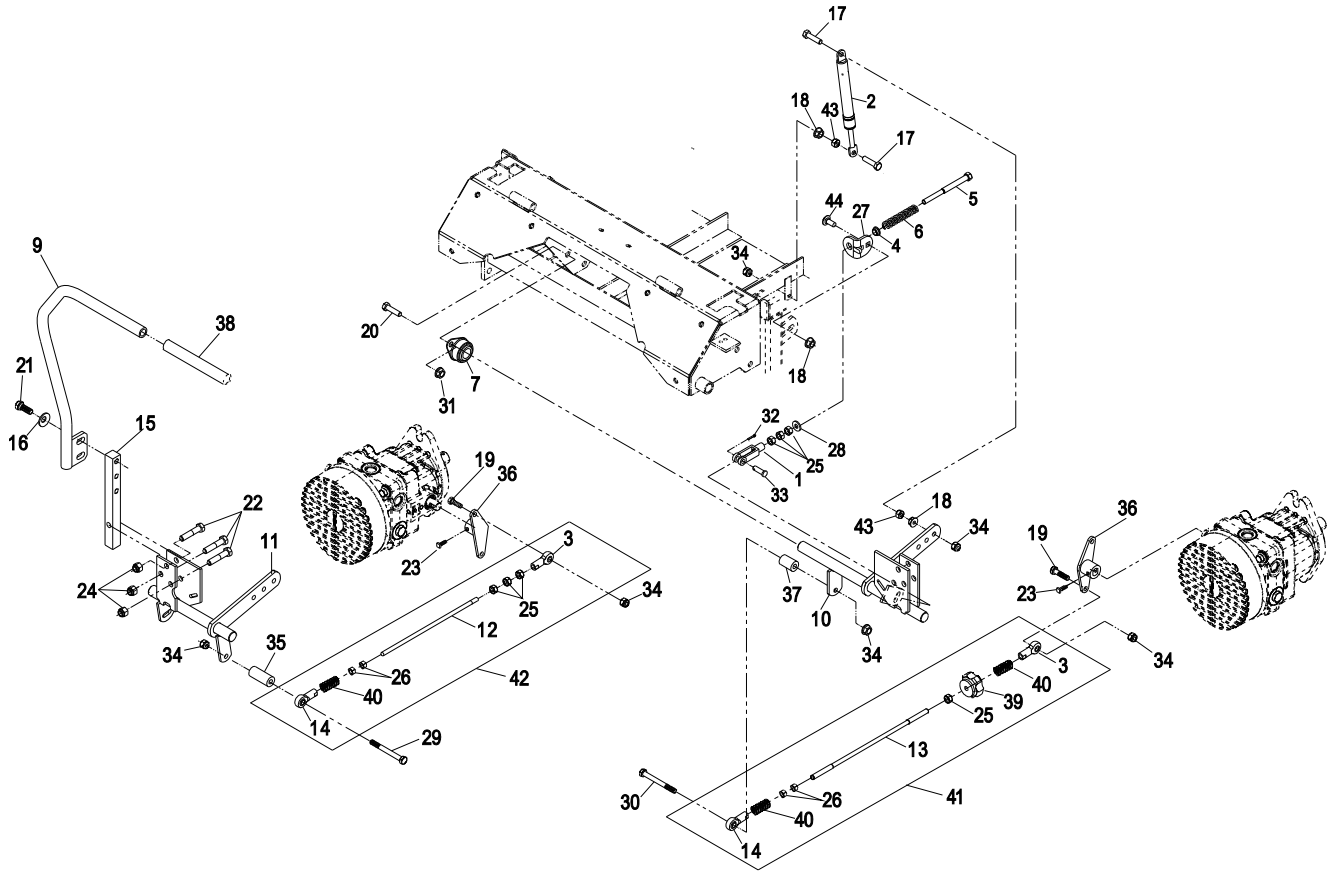

Item	Part No.	Description	Qty.
1	1-303105	Yoke	2
2	109-2339	Damper	2
3	1-543017	Balljoint (RH)	2
4	109-3769	Bushing, Nylon	2
5	1-603737	Bolt, Neutral Return	2
6	1-603807	Spring	2
7	1-633102	Bearing, Flanged	4
8✳	103-3457	Asm, Lever W/Grip (LH)	1
9	103-3458	Asm, Lever W/Grip (RH)	1
10	109-3983	Wld, Motion Control Bracket (LH)	1
11	109-3980	Wld, Motion Control Bracket (RH)	1
12	103-5182	Link, Hydro Connecting (RH)	1
13	103-3065	Link, Hydro Connecting (LH)	1
14	1-633152	Balljoint (LH)	2
15	103-0407	Arm, Control Shaft	2
16	98-5975	Washer, Spring Disc 3/8	4
17	1-403180	Screw, HH 5/16-18 x 1 1/4 Sp	4
18	32128-20	Nut, Whizlock 5/16-18	6
19	322-6	Screw, HH 5/16-18 x 1 1/4	2
20	323-4	Screw, HH 3/8-16 x 3/4	8
21	323-6	Screw, HH 3/8-16 x 1	4
22	323-9	Screw, HH 3/8-16 x 1 3/4	6

Item	Part No.	Description	Qty.
23●	1-803022	Setscrew, 5/16-18 x 5/8	2
24	3296-39	Nut, Nyloc 3/8-16	6
25	3219-2	Nut, Hex 5/16-24	10
26	1-804524	Nut, Hex 5/16-24 (LH)	4
27	109-3908	Tab, Adjustment	2
28	3256-2	Washer, 1/4 Std	2
29	322-14	Screw, HH 5/16-18 x 3	1
30	322-12	Screw, HH 5/16-18 x 2 1/2	1
31	3290-357	Nut, Whizlock 3/8-16	8
32	3272-5	Pin, Cotter 3/32 x 1/2	2
33	1-808280	Pin, Clevis 5/16 x 1	2
34	3296-29	Nut, Nyloc 5/16-18	8
35	103-5192	Spacer, Hyd Control (RH)	1
36	103-0194-03	Wld, Pump Control Arm	2
37	103-1361	Spacer, Hyd Control (LH)	1
38	103-3456	Grip, Motion Control Handle	2
39	103-3060	Knob, Tracking	1
40	1-323245	Spring, Compression	3
41	103-3062	Asm, Tracking Rod Linkage (LH)	1
42	103-5190	Asm, Tracking Rod Linkage (RH)	1
43	3217-6	Nut, Hex 5/16-18	4
44	3230-23	Bolt, Carriage 5/16-18 x 3/4, short neck	2

Exmark black touch up spray paint – Gloss black.

✳ Not illustrated.

● Use Pro-Lock, Nut Type (P/N 1-840022, .5ml tube) on setscrews.

ENGINE DECK GROUP

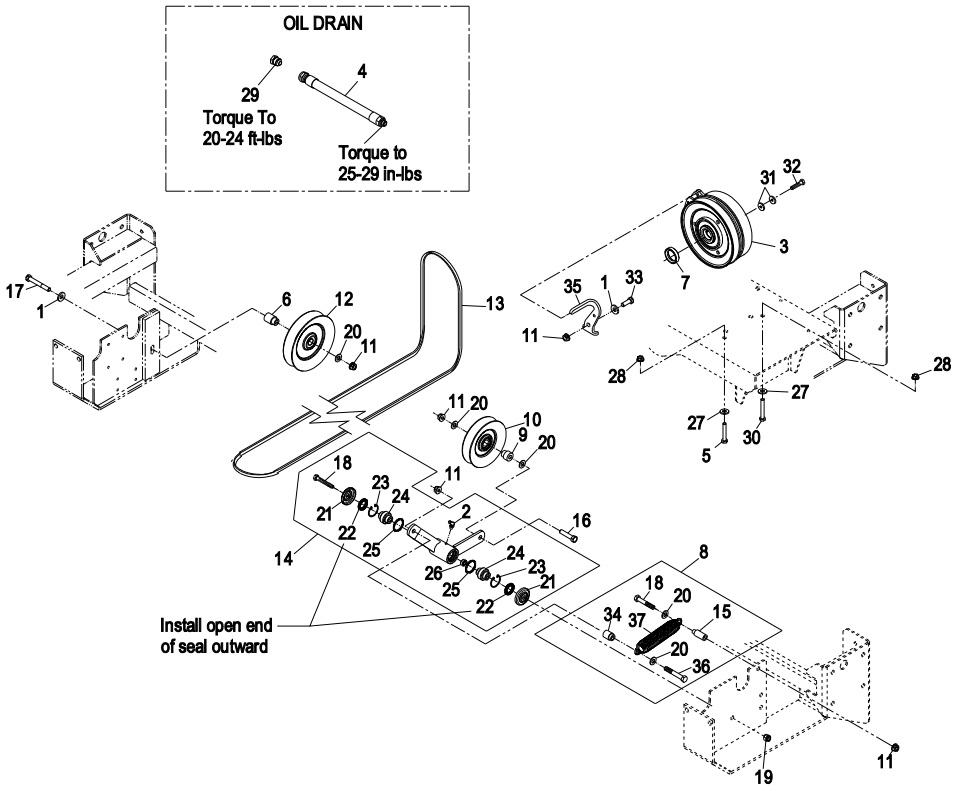

Item	Part No.	Description	Qty.
1	98-5975	Washer, Spring Disc 3/8	2
2	302-40	Zerk, 90° 1/4-28	1
3	109-7667	Clutch	1
4	109-4324	Hose, Oil Drain W/Plug	1
5	322-10	Screw, HH 5/16-18 x 2	3
6	103-2627	Bushing, Idler	1
7	103-9891	Spacer	1
8●	109-3766	Kit, Mule Idler Spring	1
9	1-603496	Bushing, Idler	1
10	1-603805	Pulley, Idler	1
11	3290-357	Nut, Whizlock 3/8-16	4
12	1-633166	Pulley, Idler	1
13	103-6506	Belt, Mule Drive	1
14✖	103-5695	Kit, Idler Arm (103-4593-03) W/Bearings	1
15	109-3141	Spacer, Spring Mount	1
16	323-9	Screw, HH 3/8-16 x 1 3/4	1
17	323-13	Screw, HH 3/8-16 x 2 3/4	1
18	1-800805	Screw, HH 3/8-16 x 3 1/2 Gr8	2

Item	Part No.	Description	Qty.
19	3296-39	Nut, Nyloc 3/8	1
20	3256-24	Washer, 3/8 SAE	5
21	103-2916	Guard, Top	2
22	103-3506	Seal, Single Lip	2
23	32120-10	Ring, Retaining	2
24	103-3504	Bearing, Spherical	2
25	106-7159	O-ring	2
26	103-5677	Spacer	1
27	1-303334	Washer, Spring Disc 5/16	5
28	32128-20	Nut, Whizlock 5/16-18	4
29	109-1012	Plug	1
30	322-11	Screw, HH 5/16-18 x 2 1/4	1
31	1-603610	Washer, Spring Disc 7/16	2
32▲	3212-8	Screw, HH 7/16-20 x 2	1
33	323-6	Screw, HH 3/8-16 x 1	1
34	1-633456	Bushing, Idler	1
35	116-0197-03	Anchor, Clutch	1
36	323-10	Screw, HH 3/8-16 x 2	1
37	116-0608	Spring	1

Exmark black touch up spray paint - gloss black.

✖ 103-5695 kit includes components shown and nyloc nut item #19.

▲ Use Pro-Lock, Nut Type (P/N 1-840022, .5ml tube) on clutch bolt.

● Kit includes components shown and item #11(2).

Briggs & Stratton Replacement Parts List

(Refer to Engine Owner's Manual)

Description	B & S Part
Engine Oil Filter	492932
Engine Air Filter	841497
Safety Filter	821136

HYDRAULIC GROUP

Item	Part No.	Description	Qty.
1	109-7543	Pump, Hydro (LH)	1
2	109-7544	Pump, Hydro (RH)	1
	106-2053	Kit, Shock Valve	1
	109-8110	Kit, Input Bearing	1
	109-8113	Kit, Seal Service 21L	1
	109-8109	Kit, Input Shaft 21L	1
	103-2670	Kit, Thrust Bearing 21L	1
	94-1913	Kit, Cylinder Block 21L	1
	100-6112	Kit, Valve Plate 21L	1
	116-1739	Fan, PW Pump Cooling	1
	116-0917	Guard, PW Pump Fan	1
3●	112-8357	Motor, Wheel Drive (CCW)	1
4	103-2916	Guard, Top	1
5	103-3506	Seal, Single Lip	2
6	32128-20	Nut, Whizlock 5/16-18	2
7	103-7613	Kit, Pump Idler (103-6248-03) W/Bearings	1
8	32120-10	Ring, Retaining	2
9	103-3504	Bearing, Spherical	2
10	3290-357	Nut, Whizlock 3/8-16	6
11	103-1940	Adaptor, Straight Long	2
	1-603992	O-Ring (37° Flare #8)	1
	1-603920	O-Ring (SAE #8)	1
12	106-7159	O-ring	2
13	103-4573-03	Tightener	1
14	1-603401	Spacer	1
15	323-7	Screw, HH 3/8-16 x 1 1/4	3
16	3256-4	Washer, 3/8 Std	3
17	3296-39	Nut, Nyloc 3/8-16	1
18	302-19	Zerk, 1/4-28 Str	1
19	10-7070	Key, Machine 1/4 x 1/4 x 7/8	1
20	103-1575	Spacer, Fan Pump Spring	1
21	116-0133	Spring	1
22	103-6226	Spacer, Engine Sheave	1
23	103-4566	Spacer, Lower Frame Idler	1
24	103-2259	Filter Head	1
25	98-5975	Washer, Spring Disc 3/8	3
26	109-6903	Hose, Pump Inlet	1
	1-603920	O-Ring (SAE #8)	1
27	103-4718	Sheave, Engine	1
28	3231-40	Bolt, Carriage 3/8-16 x 2 1/4	1
29	322-3	Screw, HH 5/16-18 x 3/4	1
30	1-543610	Washer	1
31	322-4	Screw, HH 5/16-18 x 7/8	2

Item	Part No.	Description	Qty.
32	109-7582	Belt, Hydro Pump Drive	1
33	103-4680	Hose, Wheel Motor (60”)	4
	103-4679	Hose, Wheel Motor (66” & 72”)	4
34	103-2146	Element, Hydraulic Oil Filter	1
35	103-7615	Cap, W/Gasket	1
36	103-1949	Gasket, Tank Cap	1
37▼	30-1710	Setscrew, 5/16-18 x 1	4
38	1-807259	Key, Machine 1/4 x 1/4 x 1	2
39	321-3	Screw, HH 1/4-20 x 5/8	2
40	1-805004	Washer, Lock 1/4 Heavy	2
41	325-5	Screw, HH 1/2-13 x 1 1/4	4
42	32128-49	Nut, Whizlock 1/2-13	4
43	103-2156	Adaptor, Straight	1
	103-1020	O-Ring (37° Flare #6)	1
	1-603921	O-Ring (SAE #6)	1
44	103-1014	Elbow, 90°	2
	1-603920	O-Ring (SAE #8)	1
45	3256-23	Washer, 5/16 SAE	3
46	103-7693	Spacer	1
47	103-2153	Elbow,90°	2
	1-603992	O-Ring (37° Flare #8)	1
	1-603920	O-Ring (SAE #8)	1
48	116-0888	Sheave, Hydro Pump Idler	1
49	109-6904	Asm, Filter Inlet Hose	1
50	103-4728	Asm, Lower Frame Idler	1
51	109-7561	Sheave, Hydro Pump	2
52●	112-8358	Motor, Wheel Drive (CW)	1
53	103-3186	Spacer	1
54	1-603990	Adaptor, Straight	4
	1-603992	O-Ring (37° Flare #8)	1
	1-603920	O-Ring (SAE #8)	1
55	1-603991	Adaptor, Straight	4
	1-603992	O-Ring (37° Flare #8)	1
	1-603919	O-Ring (SAE #10)	1
56	109-0582	Asm, Hydraulic Reservoir W/Decals	1
57	109-0087	Asm, Case Drain Hose	1
58	9000784	Bolt, Carriage 3/8-16 x 5	1
59	3231-31	Bolt, Carriage 3/8-16 x 2 1/2	1
60	3231-5	Bolt, Carriage 3/8-16 x 1 3/4	1
61	1-373034	Washer	2
62▼	323-8	Screw, HH 3/8-16 x 1 1/2	1
63	3212-6	Screw, HH 7/16-20 x 1 1/2	1
64	1-603610	Washer, Spring Disc 7/16	1
65■	109-6905	Asm, Filter W/Hoses	1

Exmark black touch up spray paint – gloss black.

▼ Use Prolock, Nut Type (P/N 1-840022, .5ml tube) on setscrews.

■ Does not include items 39 & 40.

● Seal Kit: 109-5966

HYDRAULIC GROUP

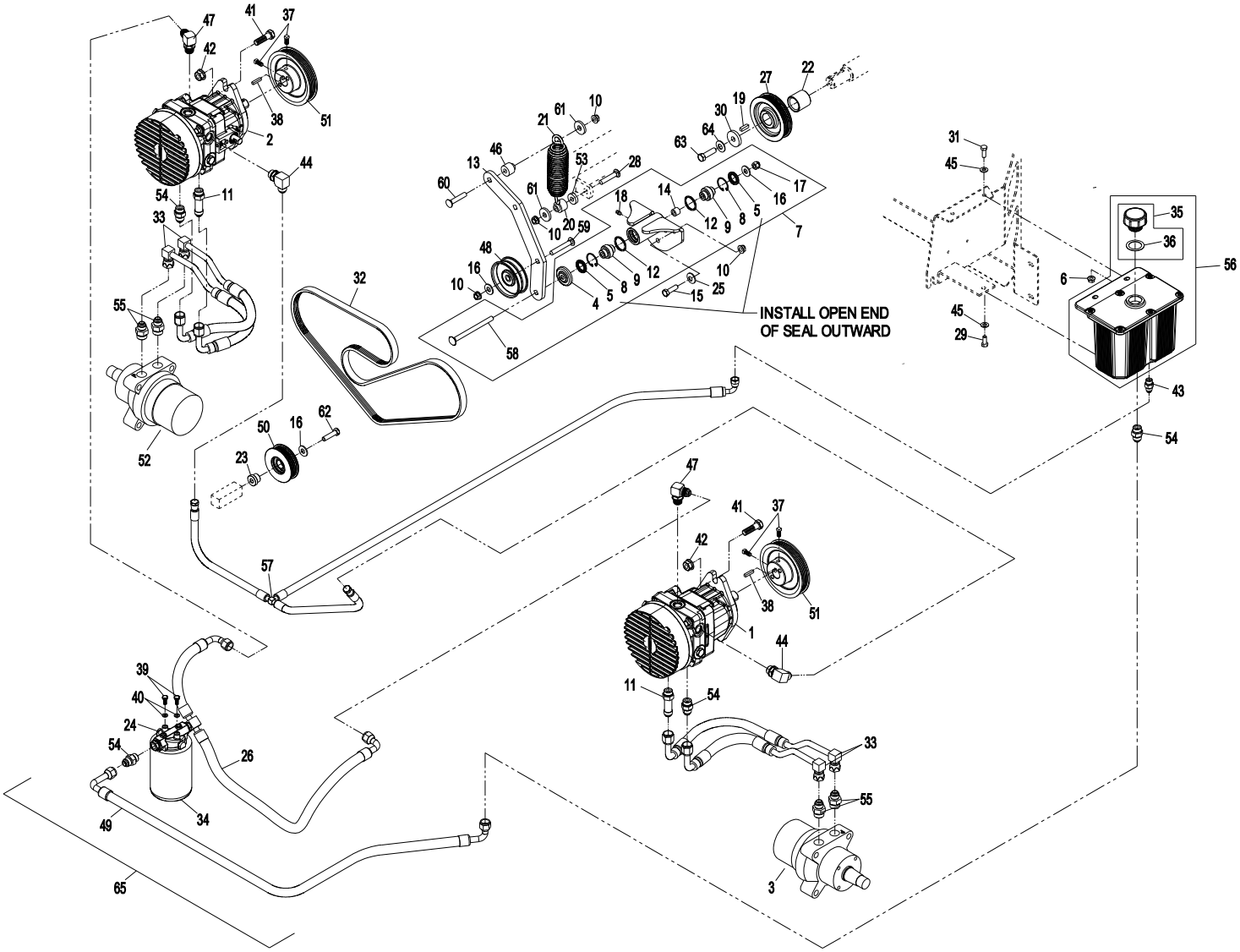

DECAL GROUP

Item	Part No.	Description	Qty.
1	109-3148	Decal, Bolt Torque	1
2	109-7949	Decal, Wheel Hub	2
3	98-5954	Decal, Missing Cover	2
4	1-513742	Decal, No Step	2
5	103-6700	Decal, Relay	1
6	103-0262	Decal, Fuel Valve	1
7	109-2219	Decal, Belt Routing	1
8	109-0872	Decal, Baffle Adjustment	1
9	116-0404	Decal, Hyd Tank / Hot Surface	1
10	103-2076	Decal, Caution Hot Surface	1
11	1-513748	Decal, Guard	1
12	103-1798	Decal, Throttle	1
13	103-4930	Decal, Choke	1
14	107-2102	Decal, Folding ROPS	1
15	1-633706	Decal, Deck Height	1
16	103-5881	Decal, Rotating Devices	1
17	1-303508	Decal, Discharge Warning	1

Item	Part No.	Description	Qty.
18	116-0127	Decal, Belt Routing	1
19	103-7616	Decal, Ignition / PTO	1
20	109-1801	Decal, Exmark Logo	1
21	109-1399	Decal, Anti-Scalp	1
22	107-2112	Decal, Danger Slope	1
23	103-7474	Decal, Lazer XS Model	1
24	103-7218	Decal, Pump Fan Warning	1
25	116-0997	Decal, Check Service	1
26	109-1214	Decal, Park Brake	1
27	1-403005	Decal, Danger	2
28	109-1215	Decal, Cutting Height	1
29	117-2718	Decal, Spark Arrester	1
30	109-1803	Decal, Triton 60”	1
31	109-1804	Decal, Triton 66”	1
32	109-1805	Decal, Triton 72”	1
33	107-9866	Decal, Top Console	1
	103-7490	Kit, Decal XS	1

DECAL GROUP

1
Lubricate Blade Bolt threads with copper based antiseize or grease and torque to 55-60 ft-lbs (75-81 N-m)
105-0140

2
Torque Wheel Lug Nuts to 90-95 ft-lbs (122-129 N-m). Torque Wheel Hub Slotted Nut to 125 ft-lbs (169 N-m) min. See Operator's Manual for more details. Check after first 100 hrs then every 500 hrs thereafter.
105-7189

3
DANGER
COVER IS MISSING. DO NOT OPERATE THIS UNIT WHEN COVER IS NOT IN PLACE.
1-583464

4
NO STEP
1-613742

5
START RELAY KILL RELAY CHARGE RELAY
105-6298

6
RH LH OFF

7
BELT ROUTING
BELT:
1-633127 - 60"
109-0775 - 66"
1-643052 - 72"
109-2219

8
BAFFLE ADJUSTMENT
CUTTING HEIGHT INCHES (mm)
4.5 (114) and Higher (3 Visible Holes)
3.5 (89) - 4.25 (108) (2 Visible Holes)
1.0 (25) - 3.25 (83) (1 Visible Hole)
109-6872

9
ONLY USE EXMARK HYDRO OIL
FILL TO TOP OF BAFFLE
CAUTION
HOT SURFACE
116-0262

10
CAUTION
HOT SURFACE
105-2090

11
CAUTION
DO NOT OPERATE WITHOUT GUARD IN PLACE.
1-612596

12
THROTTLE
103-1798

13
CHOKE
103-4930

14
WARNING
TO AVOID INJURY OR DEATH FROM ROLLOVER:
Keep roll bar in the raised and locked position and use seat belt.
THERE IS NO ROLL OVER PROTECTION WHEN THE ROLL BAR IS DOWN.
Lower the roll bar only when absolutely necessary.
Do not wear seat belt when the roll bar is down.
Drive slowly and carefully.
Raise the roll bar as soon as clearance permits.
Read and follow slope operation instructions and warnings.
105-2102

15
4.5 4.0 3.5 3.0 2.5 2.0
SHIELD

16
WARNING
ROTATING MECHANICAL DEVICES CAN CAUSE SERIOUS INJURY!
• DO NOT operate without guards in place
• Stop engine before opening cover
103-5861

17
WARNING
DO NOT OPERATE WITHOUT DISCHARGE DEFLECTOR, ENTIRE GRASS COLLECTION SYSTEM, OR MULCH KIT IN PLACE. DO NOT REMOVE GRASS CATCHER UNTIL BLADES HAVE STOPPED.
1-303508

18
PUMP BELT ROUTING
BELT:
109-7582
116-0127

19
OFF (STOP) RUN START
IGNITION
Engage and disengage at 1/2 throttle
PTO
eXmark
103-7616

20
eXmark®

21
ANTI-SCALP ROLLER ADJUSTMENT
For normal operating conditions, place rollers in positions shown for proper ground clearance.
CUTTING HEIGHT INCHES(mm)
1.0 (25)
2.0 (51)
3.0 (76)
4.0 (102)
FOR MAXIMUM FLOTATION, rollers may be positioned lower, but must maintain a minimum of 1/4" (6.4 mm) ground clearance. Never position the rollers to support the mower deck.
109-1399

22
WARNING
• Operating on wet grass or steep slopes can cause sliding and loss of control.
• Wheels dropping over edges can cause rollovers, which may result in serious injury, death or drowning.
• To avoid loss of control and possibility of rollover:
- Do NOT operate near drop-offs or near water.
- Do NOT operate on slopes greater than 15°.
- Reduce speed and use extreme caution on slopes.
- Avoid sudden turns or rapid speed changes.
• There is no roll over protection when the roll bar is down.
• Always keep roll bar in the raised and locked position and use seat belt.
• Read and follow rollover protection instructions and warning.
Greater than 15°
107-2112

23
LAZER Z XS®

24
WARNING
ROTATING FAN BLADES Can cause serious injury.
• DO NOT operate without guards in place.
• Stop engine before removing guards.
103-7216

25
SERVICE AID
Every 8 hours:
1. Check engine oil.
Every 40 hours:
2. Check hydraulic oil. (Only use recommended hydro oil.)
3. Check tire pressure - 10 psi.
4. Grease deck pivots.
5. Grease deck struts.
6. Grease deck lift pivot.
Every 200 hours:
7. Grease brake brackets.
Yearly:
8. Grease front caster pivots.
9. Grease front caster wheel bearings.
10. Grease belt idlers.
See operator's manual for additional details.
116-9667

26
RELEASE
PARK BRAKE
ENGAGE
WARNING
To avoid serious injury or death:
• Read and understand the operator's manual before using this machine.
• Do NOT operate unless trained to safely use this machine.
• Do NOT operate under the influence of alcohol or drugs.
• Do NOT operate without shields, guards, and safety devices in place and working.
• Check the function of the operator presence controls (OPC) safety system daily. Do NOT defeat the OPC system.
- Stop engine and remove key before adjusting, servicing or cleaning machine and attachments.
• Hearing protection is recommended.
109-1214

27
DANGER
KEEP HANDS and FEET AWAY
1-600506

28
DANGER
To avoid serious injury or death:
• Avoid blades unless engine and blades are stopped.
WARNING
To avoid serious injury or death:
• Pick up objects that could be thrown by the blades.
• Do NOT mow when people and pet s are in the area.
• Do NOT carry passengers.
• Look behind and to the side before changing directions.
• Before leaving the operator's position:
- Disengage PTO.
- Move drive levers out to neutral lock position.
- Engage park brake.
- Stop engine.
CUTTING HEIGHT
109-1215

29
CALIFORNIA SPARK ARRESTER WARNING
Operation of this equipment may create sparks that can start fires around dry vegetation. A spark arrester may be required. The operator should contact local fire agencies for laws or regulations relating to fire prevention requirements.
137-2718

30
TRITON™ 60
High Capacity Cutting Platform

31
TRITON™ 66
High Capacity Cutting Platform

32
TRITON™ 72
High Capacity Cutting Platform

33
MOTION CONTROL
N
R
WARNING
Battery contains sulfuric acid. Avoid contact and always shield eyes, face, skin and clothing from battery. Cigarettes, flames or sparks could cause battery to explode. Do not charge or use booster cables or adjust post connections without proper training. In event of an accident flush with water immediately. Keep out of reach of children.
Drive Wheel Release
Use 5/8" wrench. One turn counterclockwise to release. Do not over tighten.
107-9866

ELECTRICAL GROUP

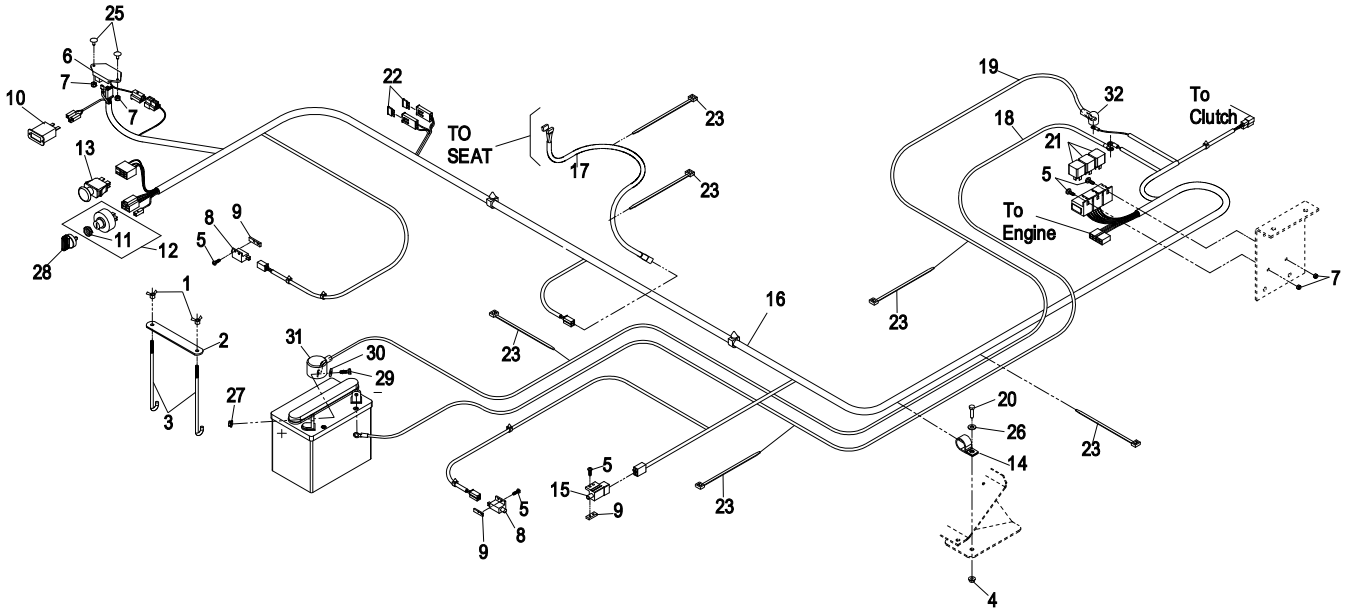

Item	Part No.	Description	Qty.
1	1-543792	Wingnut, Nyloc 1/4-20	2
2	107-9277-03	Strap, Holddown	1
3	1-633651	Bolt, Holddown	2
4	32128-20	Nut, Whizlock 5/16-18	1
5	3290-500	Screw, PPH #10-24 x 5/8	8
6	103-5218	Module, Seat Delay	1
7	3296-2	Nut, Nyloc #10-24	4
8	1-513051	Switch, Drive Lever N.O.	2
9	1-633181	Plate, Tapped	3
10	1-513374	Meter, Hour	1
11	103-0498	Nut, Ignition Switch	1
12	109-4736	Asm, Switch W/Nut	1
13	103-5221	Switch, PTO	1
14	1-643312	Clip, Loom	1
15	1-633111	Switch, Brake N.O./N.C.	1
16◆	109-0561	Harness, Wiring	1

Item	Part No.	Description	Qty.
17◆	103-1227	Harness, Seat	1
18	1-633307	Cable, Ground (-)	1
19■	109-7608	Asm, Battery Cable (+)	1
20	322-4	Screw, HH 5/16-18 x 7/8	1
21	1-643275	Relay 12V	3
22	1-816001	Fuse, 20 Amp	2
23	1-303335	Tie, Cable 7 15/16 (Large)	6
25	1-807513	Bolt, Carriage #10-24 x 1/2	2
26	3256-23	Washer, 5/16 SAE	1
27	32128-33	Nut, Whizlock 1/4-20	2
28	103-2106	Key, Exmark Logo	1
	1-603511	Key, Ignition	1
29	321-4	Screw, HH 1/4-20 x 3/4	2
30	3256-2	Washer, 1/4 Std	2
31	109-2407	Insulator, Battery (+)	1
32	1-543393	Insulator, Solenoid	1

◆ Use dielectric grease on all wiring harness connectors.
■ Includes items 31 & 32.

ELECTRICAL DIAGRAM

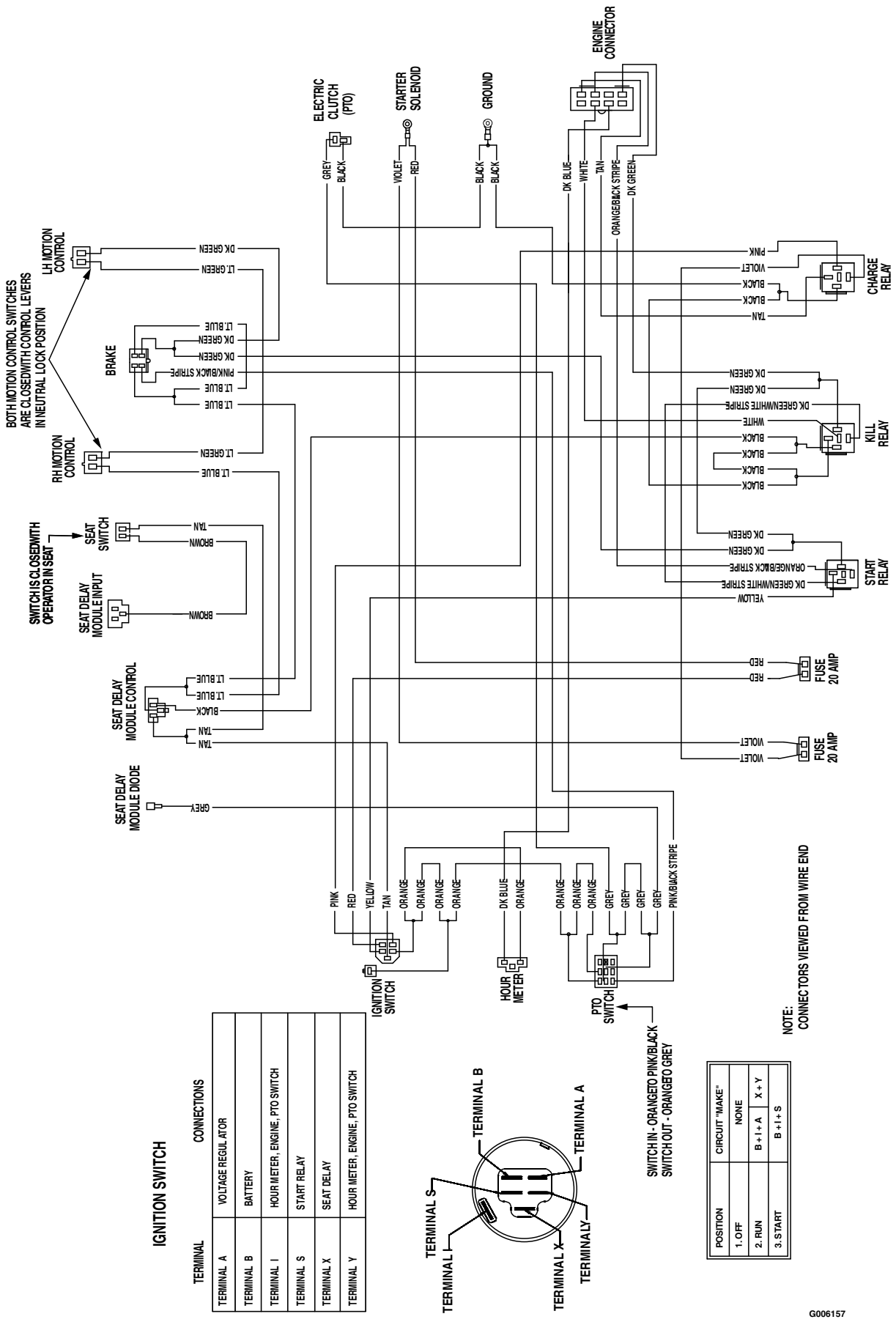

ELECTRICAL LOGIC SCHEMATIC

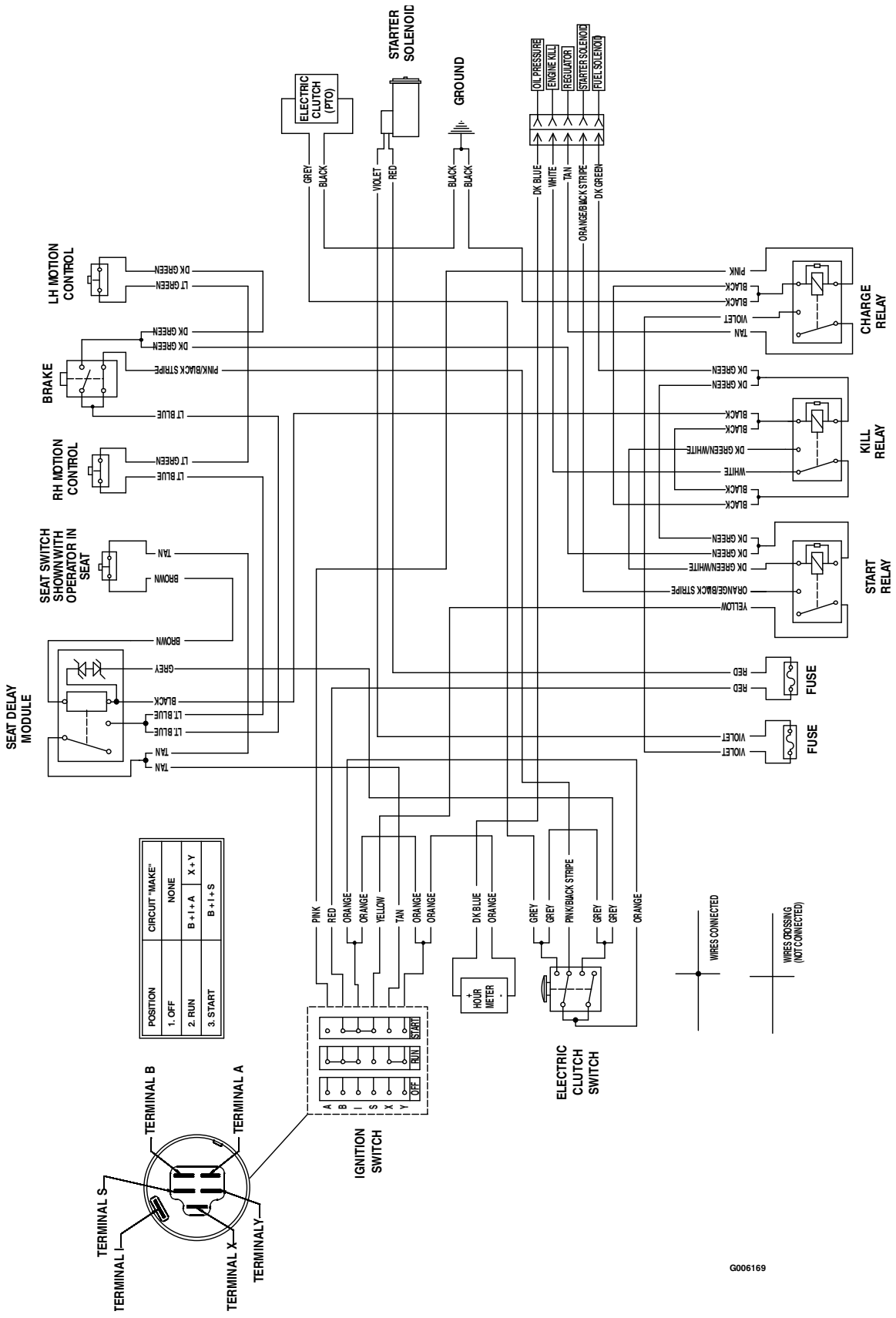

NEW EXMARK PREMIUM HYDRO OIL

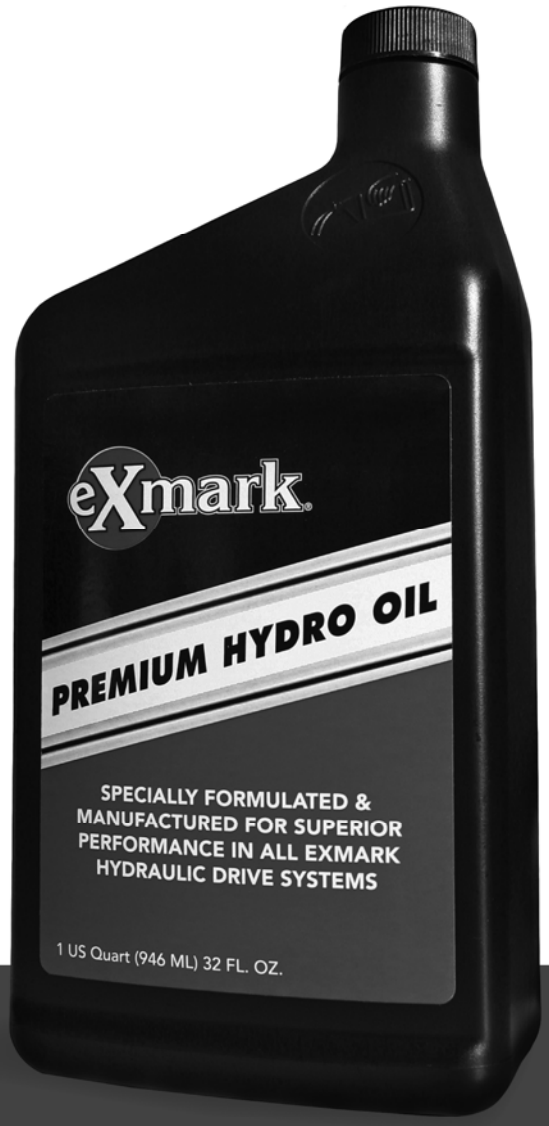

BENEFITS

- Designed & manufactured with superior anti-wear protection
- Superior thermal stability
- Consistent hydro performance
- Superior shear resistance under heavy loads
- Field tested & proven performance
- Twice the shear stability of competing oils
- Enhanced control performance
- Specially formulated for any Exmark hydraulic system

NOW AVAILABLE FOR PURCHASE

Part No. 109-9828

eXmark®

SEE EXMARK'S COMPLETE LINE OF ACCESSORIES

MID-MOUNT RIDING ACCESSORIES

CUSTOM RIDE SEAT SUSPENSION SYSTEM
FULL SUSPENSION SEAT
DECK LIFT ASSIST KIT
HITCH KIT
LIGHT KIT
12V POWER PORT
MICRO-MULCH SYSTEM
OPERATOR CONTROLLED DISCHARGE
ROLL OVER PROTECTION SYSTEM (ROPS)
SUN SHADE
TRASH CONTAINER
TURF STRIPER
ULTRA VAC COLLECTION SYSTEM
ULTRA VAC QUICK DISPOSAL SYSTEM

OUT-FRONT RIDING ACCESSORIES

CUSTOM RIDE SEAT SUSPENSION SYSTEM
DUAL-TAIL WHEEL
FLOOR PAN EXTENDER
HITCH KIT
LIGHT KIT
MICRO-MULCH SYSTEM
ROLL OVER PROTECTION SYSTEM (ROPS)
SNOW BLADE
SNOWBLOWER
SUN SHADE
TRASH CONTAINER
ULTRA VAC COLLECTION SYSTEM
ULTRA VAC QUICK DISPOSAL SYSTEM
WEATHER CAB

WALK-BEHIND ACCESSORIES

GRASS CATCHER
MICRO-MULCH SYSTEM
TURF STRIPER
STANDON

Place Model No. and Serial No. Label Here (Included in the Literature Pack or Fill in Below

Model No. _____

Serial No. _____

Date Purchased _____

Engine Model No. and Spec. No. _____

Engine Serial No. (E/No) _____

© 2014 Exmark Mfg. Co., Inc.
All Rights Reserved

Industrial Park Box 808
Beatrice, NE 68310
(402) 223-6300
Fax (402) 223-5489

Part No. 4500-377 Rev. C
Printed In USA

www.exmark.com