Form No. 3388-566 Rev A

53cm Super Recycler® Lawn Mower

Model No. 20792—Serial No. 315000001 and Up

Operator's Manual

Introduction

This rotary-blade, walk-behind lawn mower is intended to be used by residential homeowners. It is designed primarily for cutting grass on well-maintained lawns on residential properties. It is not designed for cutting brush or for agricultural uses.

Read this information carefully to learn how to operate and maintain your machine properly and to avoid injury and equipment damage. You are responsible for operating the machine properly and safely.

You may contact Toro directly at www.Toro.com for product and accessory information, help finding a dealer, or to register your product.

Whenever you need service, genuine Toro parts, or additional information, contact an Authorized Service Dealer or Toro Customer Service and have the model and serial numbers of your machine ready. Figure 1 identifies the location of the model and serial numbers on the product.

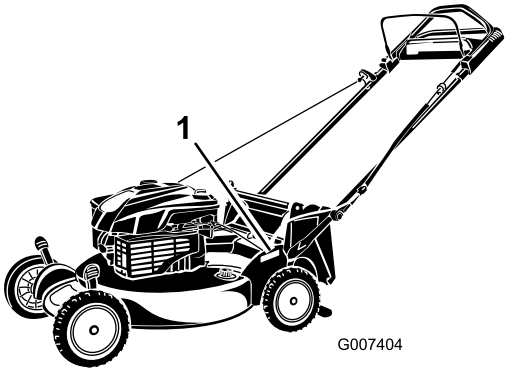

Figure 1

1. Model and serial number location

Write the product model and serial numbers in the following space:

Model No. _____

Serial No. _____

This manual identifies potential hazards and has safety messages identified by the safety alert symbol (Figure 2), which signals a hazard that may cause serious injury or death if you do not follow the recommended precautions.



Figure 2

1. Safety alert symbol

This manual uses 2 words to highlight information. **Important** calls attention to special mechanical information and **Note** emphasizes general information worthy of special attention.

This product complies with all relevant European directives. For details, see the separate product-specific Declaration of Conformity (DOC) sheet.

Net Torque: The gross or net torque of this engine was laboratory rated by the engine manufacturer in accordance with the Society of Automotive Engineers (SAE) J1940. As configured to meet safety, emission, and operating requirements, the actual engine torque on this class of mower will be significantly lower. Go to www.Toro.com to view specifications on your mower model.

Do not tamper with the engine controls or alter the governor speed; doing so may create an unsafe condition resulting in personal injury.

Contents

Introduction 1
Safety 2
General Lawn Mower Safety 2
Sound Pressure 3
Sound Power 3
Hand/Arm Vibration 4
Safety and Instructional Decals 4
Setup 5
1 Assembling and Unfolding the Handle 5
2 Installing the Recoil-Starter Rope in the Rope Guide 6
3 Filling the Engine with Oil 6
4 Assembling the Grass Bag 7
Product Overview 8
Specifications 8
Operation 9
Filling the Fuel Tank 9
Checking the Engine-Oil Level 9
Adjusting the Cutting Height 10
Adjusting the Handle Height 10
Starting the Engine 10

© 2014—The Toro® Company
8111 Lyndale Avenue South
Bloomington, MN 55420

Register at www.Toro.com.

CE

Original Instructions (EN)
Printed in the USA
All Rights Reserved
3388-566 A

Using the Self-Propel Drive 11
Stopping the Engine 11
Recycling the Clippings 11
Bagging the Clippings 12
Side-Discharging the Clippings.....14
Rear-Discharging the Clippings 15
Operating Tips 15
Maintenance 16
Recommended Maintenance Schedule(s) 16
Preparing for Maintenance.....16
Replacing the Air Filter.....16
Changing the Engine Oil 17
Adjusting the Self-Propel Drive 18
Lubricating the Wheel Gears.....18
Replacing the Blade 18
Cleaning under the Machine.....19
Storage 20
Preparing the Machine for Storage 20
Folding the Handle 20
Removing the Machine from Storage.....20

Safety

This machine has been designed in accordance with EN ISO 5395:2013.

Improperly using or maintaining this mower can result in injury. To reduce the potential for injury, comply with these safety instructions.

To ensure maximum safety, best performance, and to gain knowledge of the product, it is essential that you and any other operator of the mower read and understand the contents of this manual before the engine is ever started. Pay particular attention to the safety alert symbol (Figure 2), which means Caution, Warning, or Danger—"personal safety instruction." Read and understand the instruction because it has to do with safety. Failure to comply with the instruction may result in personal injury.

General Lawn Mower Safety

This cutting machine is capable of amputating hands and feet and of throwing objects. Failure to observe the following safety instructions could result in serious injury or death.

Training

- Read the instructions carefully. Be familiar with the controls and the proper use of the equipment.
- Never allow children or people unfamiliar with these instructions to use the machine. Local regulations can restrict the age of the operator.
- Keep in mind that the operator or user is responsible for accidents or hazards occurring to other people or their property.
- Understand explanations for all pictograms used on the machine or in the instructions.

Gasoline

WARNING-Gasoline is highly flammable. Take the following precautions.

- Store fuel in containers specifically designed for this purpose.
- Refuel outdoors only and do not smoke while refueling.
- Add fuel before starting the engine. Never remove the cap of the fuel tank or add gasoline while the engine is running or when the engine is hot.
- If gasoline is spilled, do not attempt to start the engine but move the machine away from the area of spillage and avoid creating any source of ignition until gasoline vapors have dissipated.
- Replace all fuel tank and container caps securely.

Preparation

- While mowing, always wear substantial, slip-resistant footwear and long trousers. Do not operate the equipment when barefoot or wearing open sandals.
- Thoroughly inspect the area where the equipment is to be used and remove all stones, sticks, wires, bones and other foreign objects.
- Before using, always visually inspect to see that guards and safety devices, such as deflectors and/or grass catchers, are in place and working correctly.
- Before using, always visually inspect to see that the blades, blade bolts and cutter assembly are not worn or damaged. Replace worn or damaged blades and bolts in sets to preserve balance.

Starting

- Do not tilt the machine when starting the engine unless the machine must be tilted for starting. In this case, do not tilt it more than absolutely necessary and lift only the part which is away from the operator.
- Start the engine carefully according to instructions and with feet well away from the blade(s) and not in front of the discharge chute.

Operation

- Never mow while people, especially children, or pets are nearby.
- Mow only in daylight or in good artificial light.
- Stay alert for holes in the terrain and other hidden hazards.
- Do not put hands or feet near or under rotating parts. Keep clear of the discharge opening at all times.

- Never pick up or carry a lawn mower while the engine is running.
- Use extreme caution when reversing or pulling a pedestrian-controlled mower toward you.
- Walk, never run.
- Slopes:
  - Do not mow excessively steep slopes.
  - Exercise extreme caution when on slopes.
  - Mow across the face of slopes, never up and down, and exercise extreme caution when changing direction on slopes.
  - Always be sure of your footing on slopes.
- Reduce speed on slopes and in sharp turns to prevent overturning or loss of control.
- Stop the blade if the machine must be tilted for transportation when crossing surfaces other than grass and when transporting the machine to and from the area to be mowed.
- Do not operate the engine in a confined space where dangerous carbon monoxide and other exhaust gasses can collect.
- Stop the engine
  - whenever you leave the machine.
  - before refueling.
  - before removing the grass catcher.
  - before making height adjustment unless adjustment can be made from the operating position.
- Stop the engine and disconnect the spark-plug wire.
  - before clearing blockages or unclogging chute.
  - before checking, cleaning or working on the machine.
  - after striking a foreign object, inspect the machine for damage and make repairs before restarting and operating the machine.
  - if the machine starts to vibrate abnormally (check immediately).
- Lightning can cause severe injury or death. If you see lightning or hear thunder in the area, do not operate the machine; seek shelter.
- Watch out for traffic when crossing or near roadways.

Maintenance and Storage

- Keep all nuts, bolts, and screws tight to be sure that the equipment is in safe working condition.
- Do not use pressure-cleaning equipment on the machine.
- Never store the equipment with gasoline in the tank and inside a building where fumes can reach an open flame or spark.
- Allow the engine to cool before storing in any enclosure.
- To reduce the fire hazard, keep the engine, silencer, battery compartment and gasoline storage area free of grass, leaves, or excessive grease.
- Check grass catcher components and the discharge guard frequently and replace with manufacturer's recommended parts, when necessary.
- Replace worn or damaged parts for safety.
- Replace faulty silencers.
- If the fuel tank has to be drained, do this outdoors.
- Do not change the engine governor settings or overspeed the engine. Operating an engine at excessive speed can increase the hazard of personal injury.
- Be careful while adjusting the machine to prevent entrapment of the fingers between moving blades and fixed parts of the machine.
- **To ensure the best performance and safety, purchase only genuine Toro replacement parts and accessories. Do not use *will fit* parts and accessories; they may cause a safety hazard.**

Hauling

- Use care when loading or unloading the machine into a trailer or a truck.
- Use full-width ramps for loading the machine into a trailer or a truck.
- Tie the machine down securely using straps, chains, cable, or ropes. Both the front and the rear straps should be directed down and outward from the machine.

Sound Pressure

This unit has a sound pressure level at the operator's ear of 90 dBA, which includes an Uncertainty Value (K) of 1 dBA.

The sound pressure level was determined according to the procedures outlined in EN ISO 5395:2013.

Sound Power

This unit has a guaranteed sound power level of 98 dBA, which includes an Uncertainty Value (K) of 1 dBA.

The sound power level was determined according to the procedures outlined in ISO 11094.

⚠ CAUTION

Long-term exposure to noise while operating the machine may cause some hearing loss.

Wear adequate hearing protection whenever you operate the machine for an extended period of time.

Hand/Arm Vibration

Measured vibration level for right hand = 4.7 m/s²

Measured vibration level for left hand = 3.6 m/s²

Uncertainty Value (K) = 2.4 m/s²

Measured values were determined according to the procedures outlined in EN ISO 5395:2013.

⚠ CAUTION

Long-term exposure to vibration while operating the machine may cause some numbness in the hands and wrists.

Wear gloves that dampen the vibration whenever you operate the machine for an extended period of time.

Safety and Instructional Decals

Important: **Safety and instruction decals are located near areas of potential danger. Replace damaged decals.**

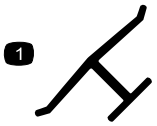

Manufacturer's Mark

1. Indicates the blade is identified as a part from the original machine manufacturer.

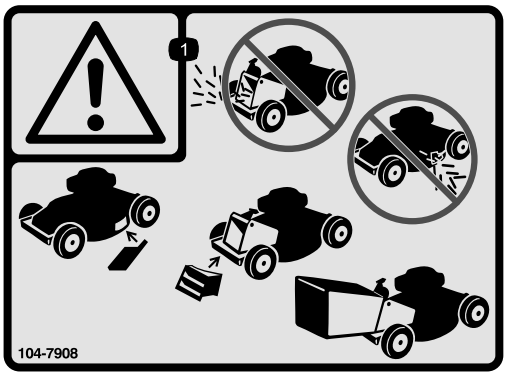

104-7908

1. Warning—do not operate the mower without the rear discharge plug or bag in place; do not operate the mower without the side discharge cover or deflector in place.

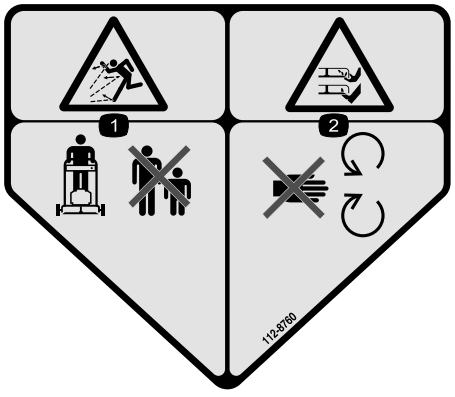

112-8760

1. Thrown object hazard—keep bystanders a safe distance from the machine.
2. Cutting/dismemberment of hand or foot—stay away from moving parts.



112-8867

1. Lock
2. Unlock



115-8411

1. Unlocked
2. Locked

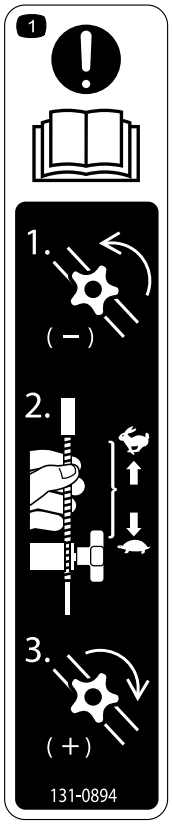

131-0894

Traction Adjustment

1. Attention; read the *Operator's Manual*—1) Loosen the knob by turning it counter clockwise; 2) Pull the cable(s) away from the engine to decrease the traction, or push the cable(s) toward the engine to increase the traction; 3) Tighten the knob by turning it clockwise.

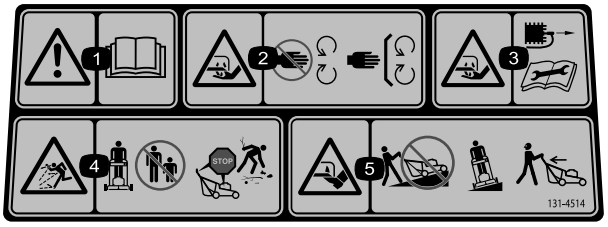

131–4514

1. Warning—read the *Operator's Manual*.
2. Cutting/dismemberment hazard of hand or foot, mower blade—stay away from moving parts; keep all guards and shields in place.
3. Cutting/dismemberment hazard of hand or foot, mower blade—disconnect the spark-plug wire and read the instructions before servicing or performing maintenance.
4. Thrown object hazard—keep bystanders a safe distance from the machine; stop the engine before leaving the operating position; pick up any debris before mowing.
5. Cutting/dismemberment hazard of hand or foot, mower blade—do not operate up and down slopes; operate side to side on slopes; look behind you when backing up.

Setup

Important: **Remove and discard the protective plastic sheet that covers the engine.**

1

Assembling and Unfolding the Handle

No Parts Required

Procedure

⚠ WARNING

Assembling and unfolding the handle improperly can damage the cables, causing an unsafe operating condition.

- **Do not damage the cables when assembling and unfolding the handle.**
- **If a cable is damaged, contact an Authorized Service Dealer.**

1. Raise the rear of the machine housing to its highest cutting-height setting by moving the 2 rear cutting-height levers all the way forward. Refer to Adjusting the Cutting Height (page 10).
2. Attach the handle ends to the machine housing with 2 washers and 2 handle bolts (Figure 3), **but do not tighten the handle bolts.**

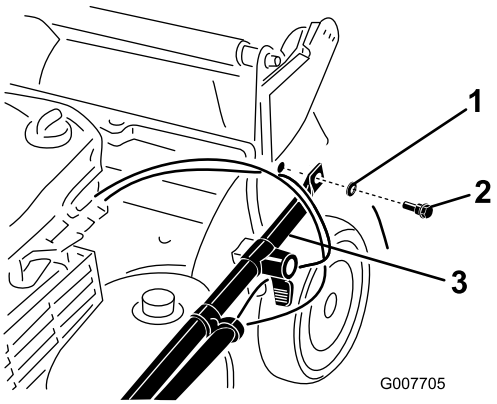

Figure 3

1. Washer
2. Handle bolt
3. Handle end

3. Rotate the handle rearward (Figure 4).

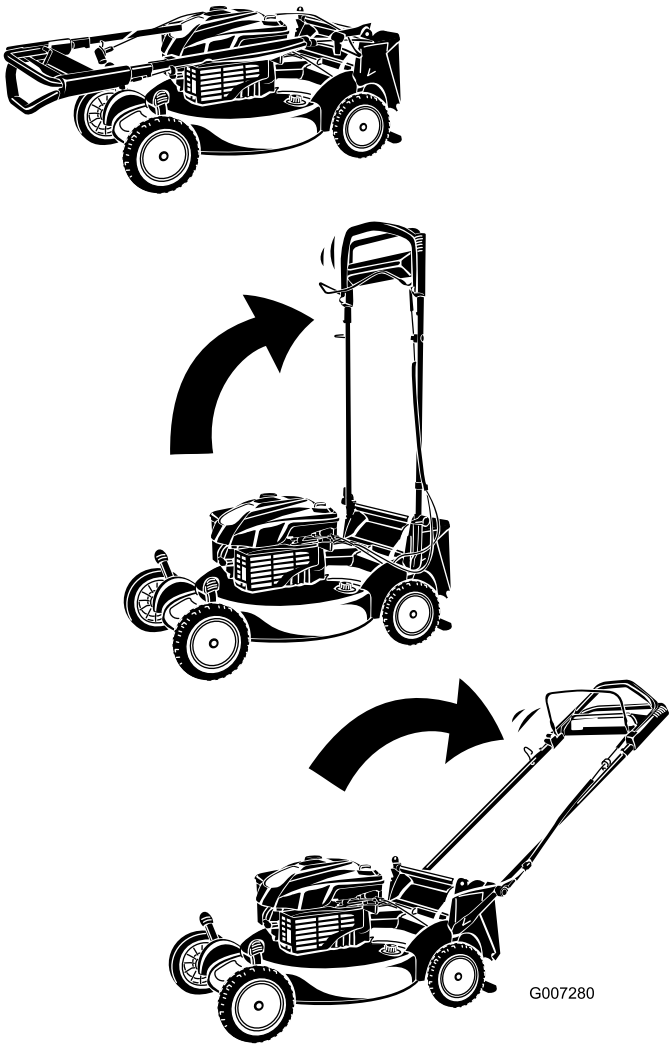

Figure 4

4. Lock the handle at your desired height. Refer to Adjusting the Handle Height (page 10).
5. Torque the handle bolts to 120 to 160 in-lb (14 to 17 N-m).
6. Adjust the cutting height. Refer to Adjusting the Cutting Height (page 10).

2

Installing the Recoil-Starter Rope in the Rope Guide

No Parts Required

Procedure

Important: You must install the recoil-starter rope in the rope guide.

Hold the blade-control bar to the upper handle and pull the recoil-starter rope through the rope guide on the handle (Figure 5).

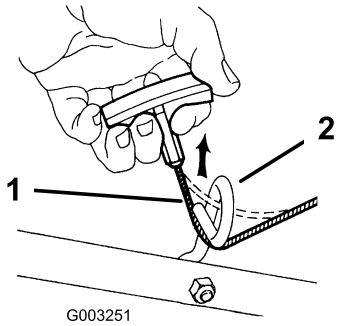

Figure 5

1. Recoil-starter rope
2. Rope guide

3

Filling the Engine with Oil

No Parts Required

Procedure

Important: This machine does not come with oil in the engine. Before starting the engine, fill the engine with oil.

Important: Change the engine oil after the first 5 operating hours; change it yearly thereafter. Refer to Changing the Engine Oil (page 17).

1. Move the machine to a level surface.
2. Remove the dipstick (Figure 6) and pour about 3/4 of the crankcase capacity of oil into the oil-fill tube.

   Note: Max. fill: 0.59 L (20 oz), type: SAE 30 detergent oil with an API service classification of SF, SG, SH, SJ, SL, or higher.

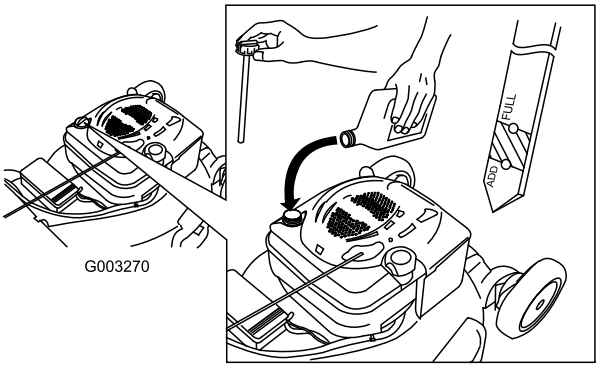

Figure 6

3. Wipe off the dipstick end with a clean cloth.
4. Insert the dipstick into the oil-fill tube, and screw it in until it stops.
5. Remove the dipstick and read the oil level on the dipstick; refer to Figure 6.
   - If the oil level is too low, add a small amount of oil slowly to the oil-fill tube, and then repeat steps 3 through 5 until the oil level is correct as shown in Figure 6.
   - If the oil level is too high, drain the excess oil until you obtain the correct oil level on the dipstick. To drain the excess oil, refer to Changing the Engine Oil (page 17).

   Important: If the oil level in the crankcase is too low or too high and you run the engine, you may damage the engine.
6. Install the dipstick securely by hand.

4 Assembling the Grass Bag

No Parts Required

Procedure

1. Slip the grass bag over the frame as shown in Figure 7.

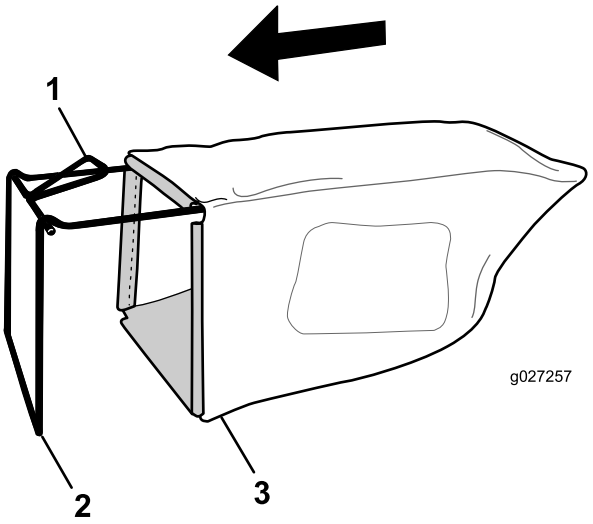

Figure 7

1. Handle
2. Frame
3. Grass bag

Note: Do not slip the bag over the handle (Figure 7).

2. Hook the bottom channel of the bag onto the bottom of the frame (Figure 8).

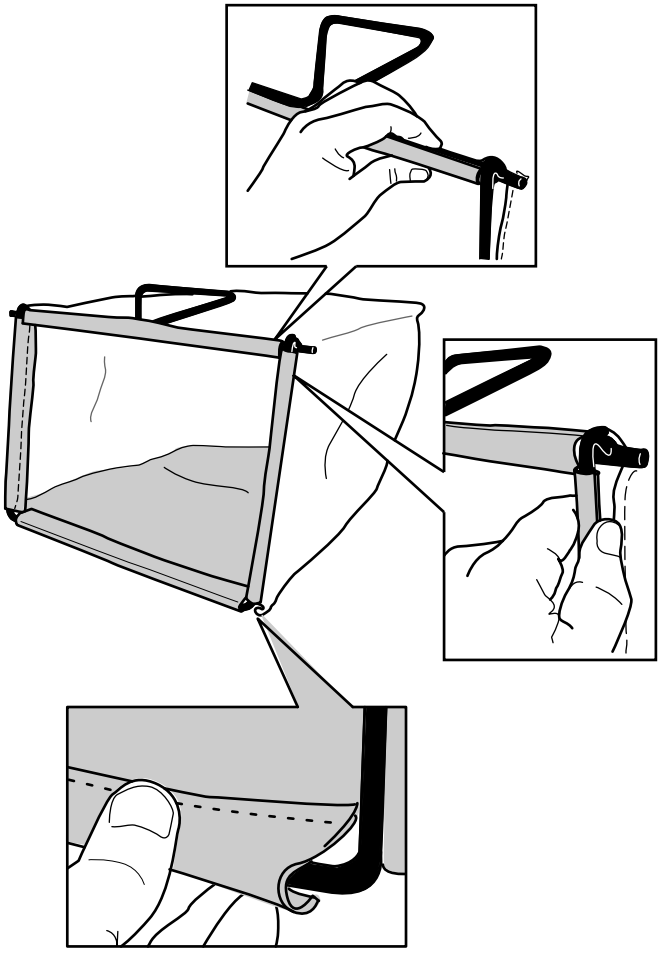

Figure 8

3. Hook the top and side channels of the bag onto the top and sides of the frame, respectively (Figure 8).

Product Overview

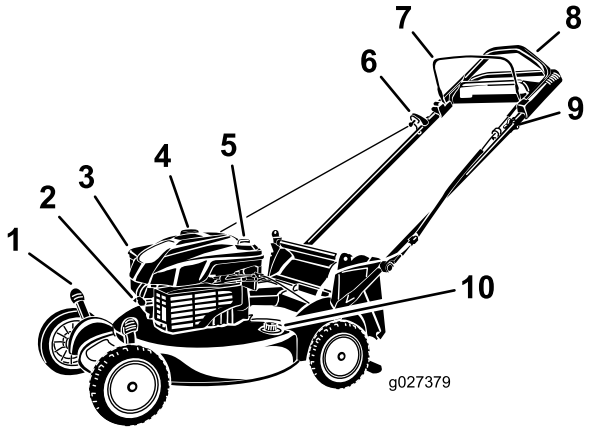

Figure 9

1. Cutting-height lever (4)
2. Spark plug
3. Air filter
4. Fuel-tank cap
5. Oil fill/Dipstick
6. Recoil-start handle
7. Blade-control bar
8. Upper handle
9. Adjustment knob for the self-propel drive
10. Washout port

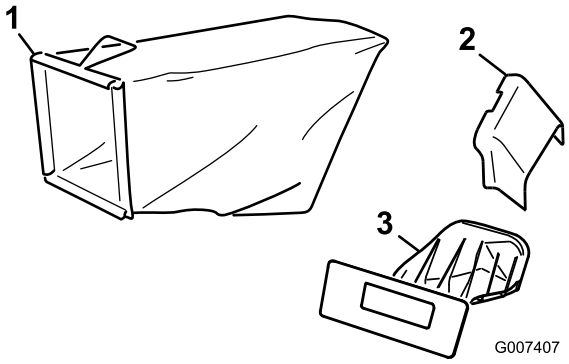

Figure 10

1. Grass bag
2. Side-discharge chute
3. Rear-discharge plug (installed)

Specifications

Model	Weight	Length	Width	Height
20792	38 kg (84 lb)	165 cm (65 inches)	56 cm (22 inches)	104 cm (41 inches)

Operation

Filling the Fuel Tank

⚠ DANGER

Gasoline is extremely flammable and explosive. A fire or explosion from gasoline can burn you and others.

- **To prevent a static charge from igniting the gasoline, place the container and/or machine directly on the ground before filling, not in a vehicle or on an object.**
- **Fill the tank outdoors when the engine is cold. Wipe up spills.**
- **Do not handle gasoline when smoking or around an open flame or sparks.**
- **Store gasoline in an approved fuel container, out of the reach of children.**

- For best results, use only clean, fresh (less than 30 days old), unleaded gasoline with an octane rating of 87 or higher ((R+M)/2 rating method).
- Oxygenated fuel with up to 10% ethanol or 15% MTBE by volume is acceptable.
- **Ethanol:** Gasoline with up to 10% ethanol (gasohol) or 15% MTBE (methyl tertiary butyl ether) by volume is acceptable. Ethanol and MTBE are not the same. Gasoline with 15% ethanol (E15) by volume is not approved for use. Never use gasoline that contains more than 10% ethanol by volume, such as E15 (contains 15% ethanol), E20 (contains 20% ethanol), or E85 (contains up to 85% ethanol). Using unapproved gasoline may cause performance problems and/or engine damage which may not be covered under warranty.
- **Do not** use gasoline containing methanol.
- **Do not** store fuel either in the fuel tank or in fuel containers over the winter unless a fuel stabilizer is used.
- **Do not** add oil to gasoline.

Fill the fuel tank with fresh unleaded regular gasoline from a major name-brand service station (Figure 11).

Important: To reduce starting problems, add fuel stabilizer to the fuel all season, mixing it with gasoline less than 30 days old.

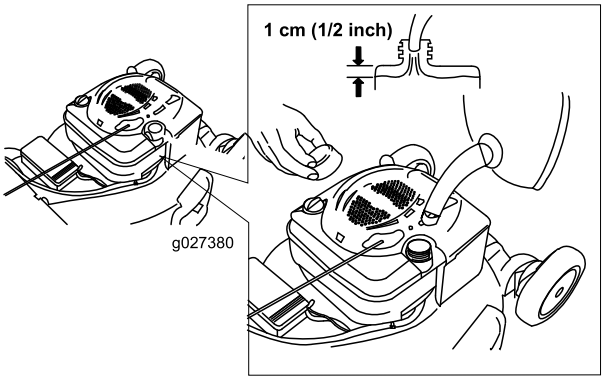

Figure 11

Checking the Engine-Oil Level

Service Interval: Before each use or daily

Max. fill: 0.59 L (20 oz), type: SAE 30 detergent oil with an API service classification of SF, SG, SH, SJ, SL, or higher.

1. Move the machine to a level surface.
2. Remove the dipstick (Figure 12).

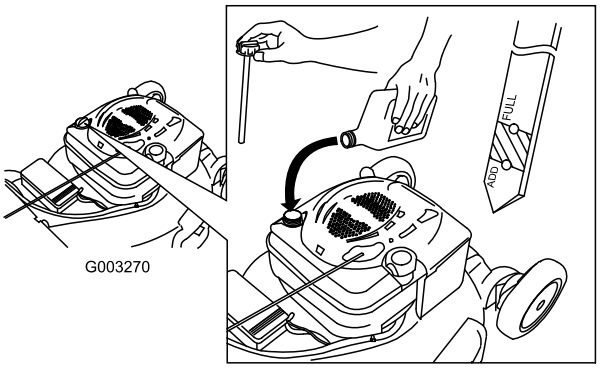

Figure 12

3. Wipe off the dipstick end with a clean cloth.
4. Insert the dipstick into the oil-fill tube and screw it in until it stops.
5. Remove the dipstick and read the oil level; refer to Figure 12.
   - If the oil level is below the **Add** mark on the dipstick, **slowly** add a small amount of oil to the oil-fill tube, and then repeat steps 3 through 5 until the oil level is at the **Full** mark on the dipstick.
   - If the oil level is above the **Full** mark on the dipstick, drain the excess oil until the oil level is at the **Full** mark on the dipstick. To drain the excess oil, refer to Changing the Engine Oil (page 17).

     Important: If the oil level in the crankcase is too low or too high and you run the engine, you may damage the engine.
6. Install the dipstick securely by hand.

Adjusting the Cutting Height

⚠ WARNING

Adjusting the cutting height may bring you into contact with the moving blade, causing serious injury.

- **Stop the engine and wait for all moving parts to stop.**
- **Do not put your fingers under the housing when adjusting the cutting height.**

⚠ CAUTION

If the engine has been running, the muffler will be hot and can severely burn you. Keep away from the hot muffler.

Adjust the cutting height as desired. Set all 4 wheels to the same height.

Note: To raise the machine, move all 4 cutting height levers forward; to lower the machine, move them all rearward (Figure 13).

A = 3 cm (1-1/4 inches)
B = 4 cm (1-3/4 inches)
C = 6 cm (2-1/4 inches)
D = 7 cm (2-3/4 inches)
E = 8 cm (3-1/4 inches)
F = 11 cm (4-1/4 inches)
G = 11 cm (4-1/4 inches)

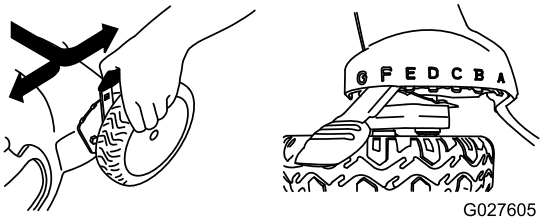

Figure 13

Adjusting the Handle Height

You may raise or lower the upper handle to a position comfortable for you.

Rotate the handle lock, move the handle to 1 of 3 positions, and lock the handle into position (Figure 14).

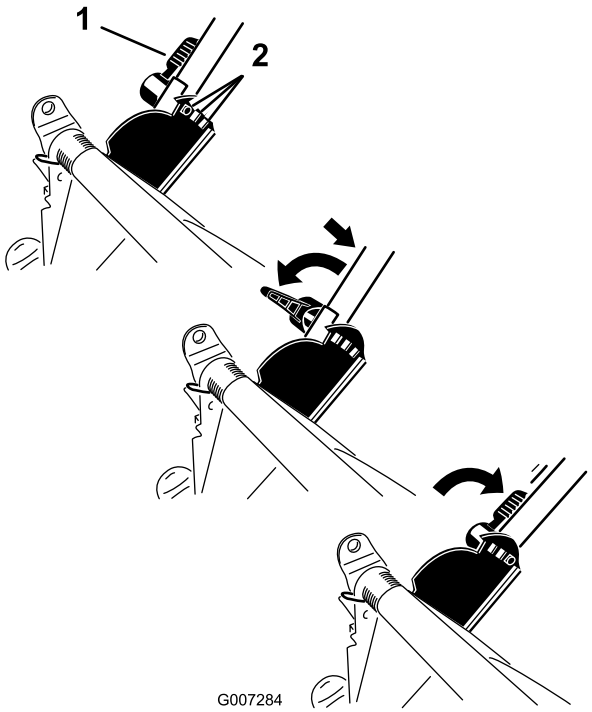

Figure 14

Starting the Engine

1. Pull the blade-control bar to the handle (Figure 15).

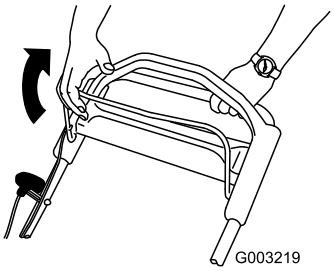

Figure 15

2. Pull the recoil-start handle (Figure 16).

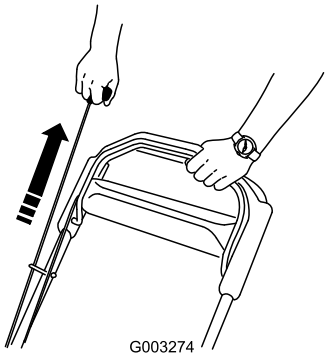

Figure 16

Note: If the machine does not start, contact an Authorized Service Dealer.

Using the Self-Propel Drive

To operate the self-propel drive, simply walk with your hands on the upper handle and your elbows at your sides, and the machine will automatically keep pace with you (Figure 17).

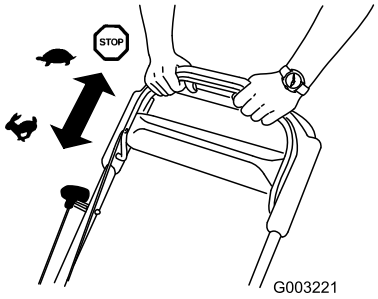

Figure 17

Stopping the Engine

Service Interval: Before each use or daily—Ensure that the engine stops within 3 seconds after releasing the blade-control bar.

To stop the engine, release the blade-control bar (Figure 18).

Important: When you release the blade-control bar, both the engine and blade should stop within 3 seconds. If they do not stop properly, stop using your machine immediately and contact an Authorized Service Dealer.

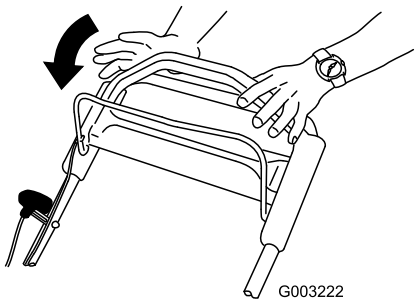

Figure 18

Recycling the Clippings

Your machine comes from the factory ready to recycle the grass and leaf clippings back into the lawn.

If the side-discharge chute is on the machine, remove it and lock the side discharge door; refer to Removing the Side-Discharge Chute (page 14) before recycling the clippings.

Important: Ensure that the rear-discharge plug is locked in place. To lock the plug: Raise the discharge deflector (Figure 19), firmly push the plug in until it snaps into place behind the tabs, and rotate the lever on the plug to the left (Figure 20).

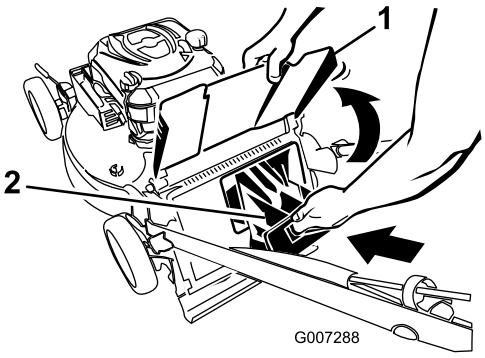

Figure 19

1. Discharge deflector
2. Rear-discharge plug

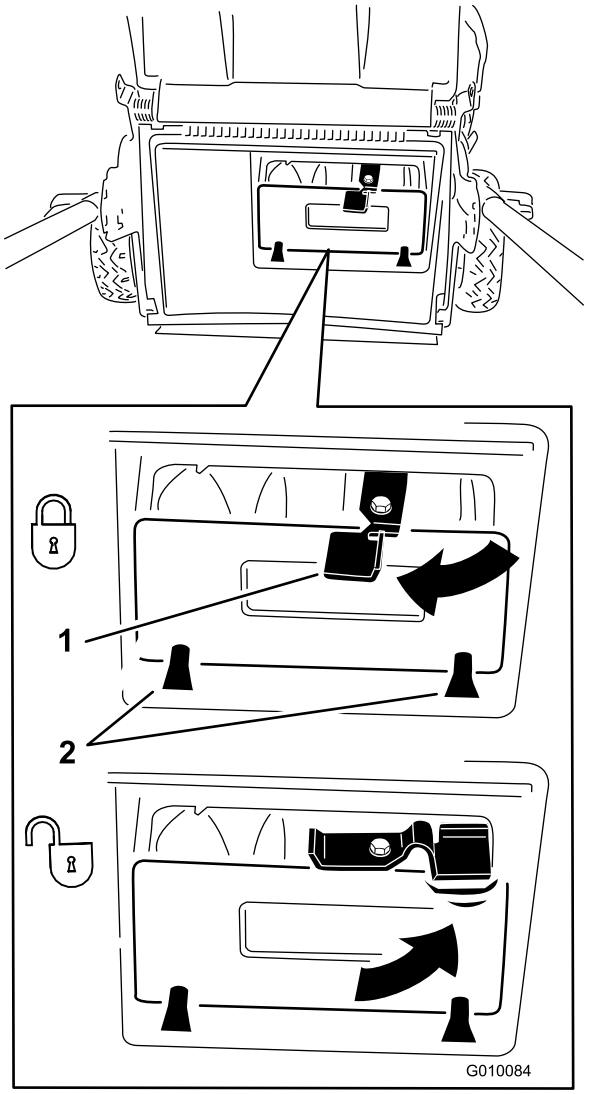

Figure 20

1. Lever
2. Tabs

Note: To unlock the plug, rotate the lever on the plug to the right (Figure 20).

Bagging the Clippings

Use the grass bag when you want to collect grass and leaf clippings from the lawn.

⚠ WARNING

A worn grass bag could allow small stones and other similar debris to be thrown toward you or bystanders, resulting in serious personal injury or death.

Check the grass bag frequently. If it is damaged, install a new Toro replacement bag.

If the side-discharge chute is on the machine, remove it and lock the side-discharge door; refer to Removing the Side-Discharge Chute (page 14) before bagging the clippings.

⚠ WARNING

The blade is sharp; contacting the blade can result in serious personal injury.

Stop the engine and wait for all moving parts to stop before leaving the operating position.

Installing the Grass Bag

1. Route the starter rope around the lower-rope guide (Figure 21).

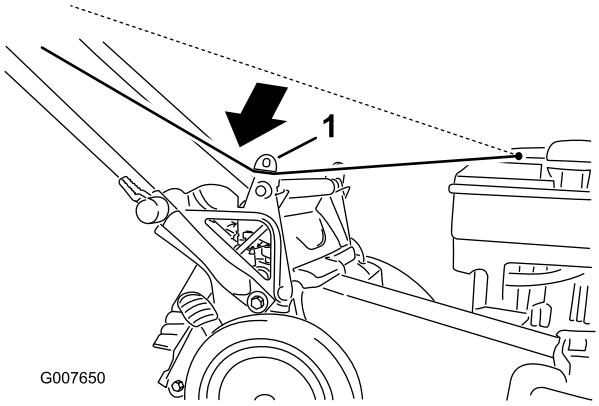

Figure 21

1. Lower-rope guide

Note: The lower-rope guide releases the starter rope when you pull the recoil-start handle.

2. Raise and hold up the discharge deflector (Figure 22).

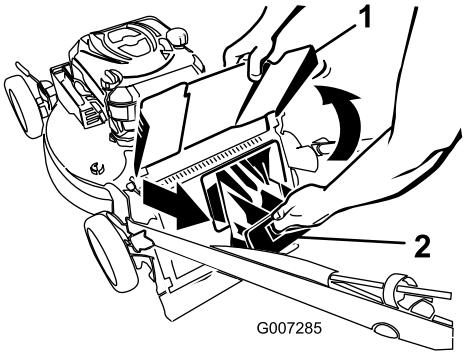

Figure 22

1. Discharge deflector
2. Rear-discharge plug

3. Pull out the rear-discharge plug (Figure 22).
4. Hang the upper front edge of the bag on the notches (Figure 23).

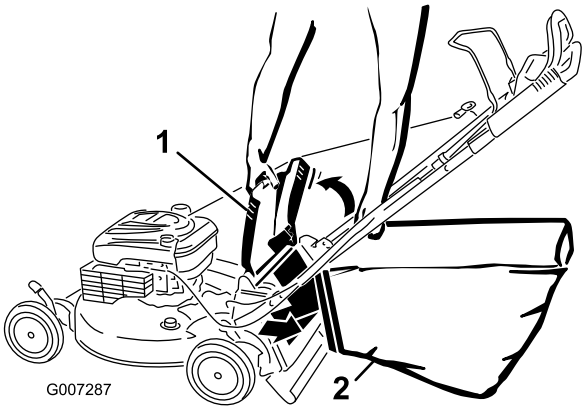

Figure 23

1. Discharge deflector 2. Grass bag

5. Lower the discharge deflector.

Removing the Grass Bag

1. Route the starter rope around the lower-rope guide (Figure 24).

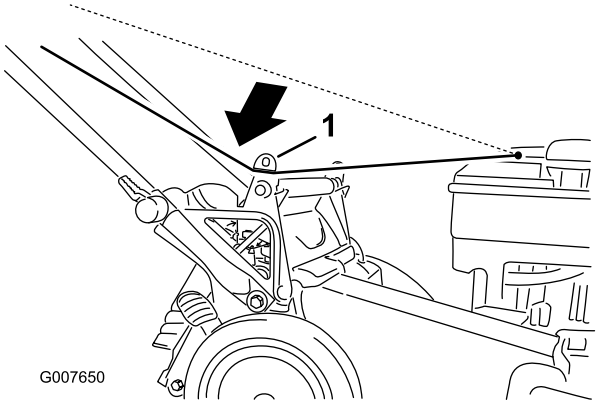

Figure 24

1. Lower-rope guide

Note: The lower-rope guide releases the starter rope when you pull the recoil-start handle.

2. Raise and hold up the discharge deflector.
3. Lift the grass bag up by the handle off the notches.
4. Install the rear-discharge plug (Figure 23).

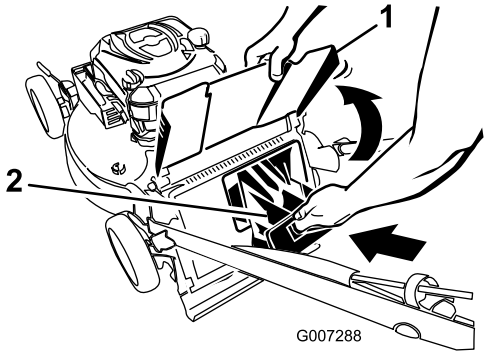

Figure 25

1. Discharge deflector 2. Rear-discharge plug

Important: Ensure that the rear-discharge plug is locked in place. To lock the plug, firmly push the plug in until it snaps into place behind the tabs, and rotate the lever on the plug to the left (Figure 26).

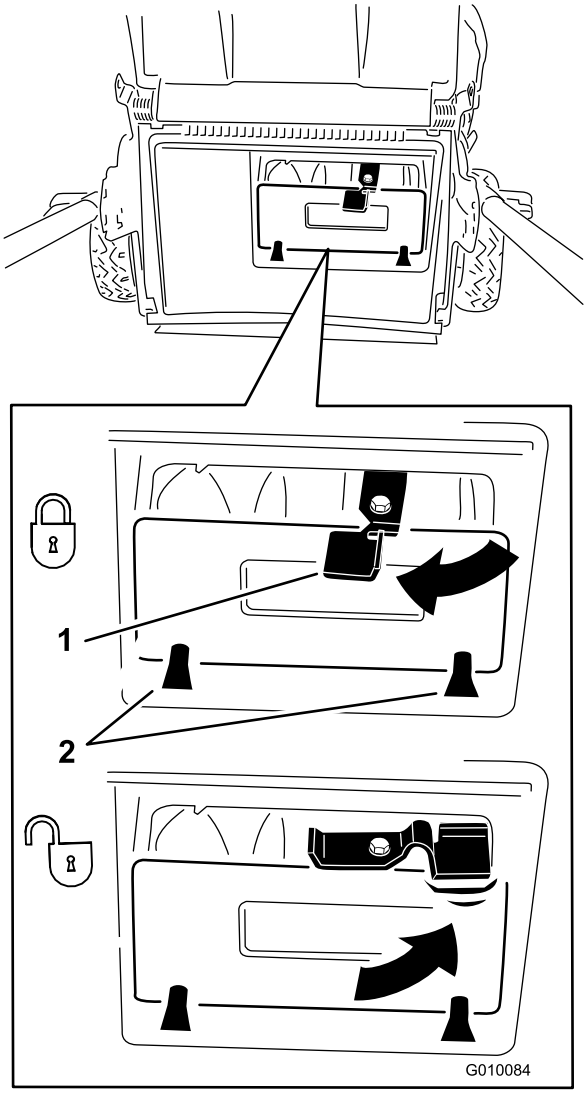

Figure 26

1. Lever 2. Tabs

Note: To unlock the plug, rotate the lever on the plug to the right (Figure 26).

5. Lower the discharge deflector.

Side-Discharging the Clippings

Use the side discharge for cutting very tall grass.

If the bag is on the machine, remove it and insert the mulch plug; refer to Removing the Grass Bag (page 13) before side-discharging the clippings.

Important: Ensure that the rear discharge plug is locked in place. To lock the plug: Raise the discharge deflector (Figure 27), firmly push the plug in until it snaps into place behind the tabs, and rotate the lever on the plug to the left (Figure 26).

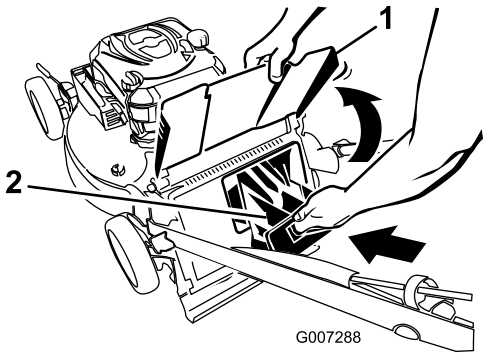

Figure 27

1. Discharge deflector
2. Rear-discharge plug

Note: To unlock the plug, rotate the lever on the plug to the right (Figure 26).

⚠ WARNING

The blade is sharp; contacting the blade can result in serious personal injury.

Stop the engine and wait for all moving parts to stop before leaving the operating position.

Installing the Side-Discharge Chute

1. Unlock the side-discharge door (Figure 28).

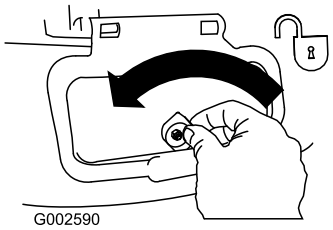

Figure 28

2. Lift open the side-discharge door (Figure 29).

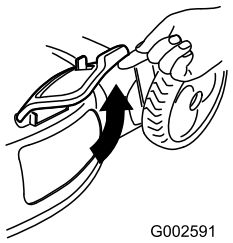

Figure 29

3. Install the side-discharge chute and close the door onto the chute (Figure 30).

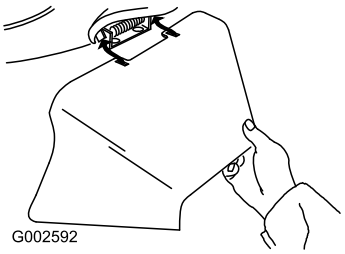

Figure 30

Removing the Side-Discharge Chute

To remove the side discharge chute, reverse the steps above.

Important: Lock the side-discharge door after you close it (Figure 31).

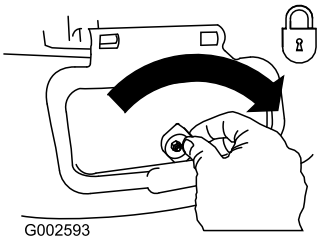

Figure 31

Rear-Discharging the Clippings

Use the rear discharge for cutting very tall grass.

If the bag is on the machine, remove it; refer to Removing the Grass Bag (page 13) before rear-discharging the clippings.

If the side discharge chute is on the machine, remove it and lock the side discharge door; refer to Removing the Side-Discharge Chute (page 14) before rear-discharging the clippings.

1. Raise and hold up the discharge deflector (Figure 32).

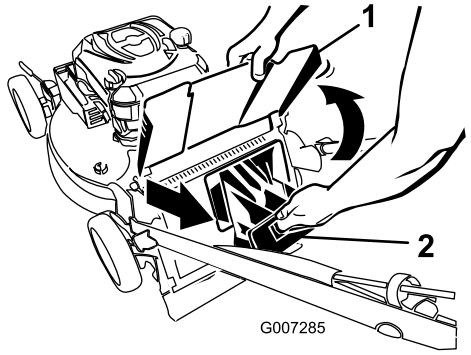

Figure 32

1. Discharge deflector 2. Rear-discharge plug

2. Pull out the rear-discharge plug (Figure 32).

⚠ WARNING

The blade is sharp; contacting the blade can result in serious personal injury.

Stop the engine and wait for all moving parts to stop before leaving the operating position.

Operating Tips

General Mowing Tips

- Clear the area of sticks, stones, wire, branches, and other debris that the blade could hit.
- Avoid striking solid objects with the blade. Never deliberately mow over any object.
- If the machine strikes an object or starts to vibrate, immediately stop the engine, disconnect the wire from the spark plug, and examine the machine for damage.
- For best performance, install a new blade before the cutting season begins.
- Replace the blade when necessary with a Toro replacement blade.

Cutting Grass

- Cut only about a third of the grass blade at a time. Do not cut below the 60 mm (2-1/4 inch) setting unless the grass is sparse or it is late fall when grass growth begins to slow down. Refer to Adjusting the Cutting Height (page 10).
- When cutting grass over 15 cm (6 inches) tall, mow at the highest cutting-height setting and walk slower; then mow again at a lower setting for the best lawn appearance. If the grass is too long, the machine may plug and cause the engine to stall.
- Mow only dry grass or leaves. Wet grass and leaves tend to clump on the yard and can cause the machine to plug or the engine to stall.

⚠ WARNING

Wet grass or leaves can cause serious injury if you slip and contact the blade. Mow only in dry conditions.

- Alternate the mowing direction. This helps disperse the clippings over the lawn for even fertilization.
- If the finished lawn appearance is unsatisfactory, try 1 or more of the following:
  - Replace the blade or have it sharpened.
  - Walk at a slower pace while mowing.
  - Raise the cutting height on your machine.
  - Cut the grass more frequently.
  - Overlap cutting swaths instead of cutting a full swath with each pass.
  - Set the cutting height on the front wheels 1 notch lower than the rear wheels. For example, set the front wheels at 60 mm (2-1/4 inches) and the rear wheels at 70 mm (2-3/4 inches).

Cutting Leaves

- After cutting the lawn, ensure that half of the lawn shows through the cut leaf cover. You may need to make more than a single pass over the leaves.
- If there are more than 13 cm (5 inches) of leaves on the lawn, set the front cutting height 1 or 2 notches higher than the rear cutting height.
- Slow down your mowing speed if the machine does not cut the leaves finely enough.

Maintenance

Note: Determine the left and right sides of the machine from the normal operating position.

Recommended Maintenance Schedule(s)

Maintenance Service Interval	Maintenance Procedure
After the first 5 hours	• Change the engine oil.
Before each use or daily	• Check the engine oil level. • Ensure that the engine stops within 3 seconds after releasing the blade-control bar. • Clean under the machine.
Every 25 hours	• Replace the blade or have it sharpened (more frequently if the edge dulls quickly).
Every 50 hours	• Change the engine oil; change it more frequently in dusty operating conditions.
Yearly	• Replace the air filter yearly; replace it more frequently in dusty operating conditions. • Lubricate the wheel gears.

Important: Refer to your engine owner's manual for additional maintenance procedures.

Preparing for Maintenance

1. Stop the engine and wait for all moving parts to stop.
2. Disconnect the spark-plug wire from the spark plug (Figure 33) before performing any maintenance procedure.

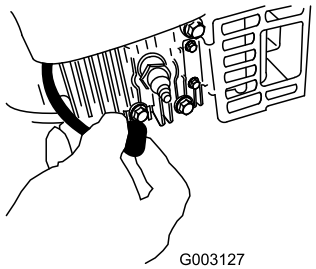

Figure 33

3. After performing the maintenance procedure(s), connect the spark-plug wire to the spark plug.

Important: Before tipping the machine to change the oil or replace the blade, allow the fuel tank to run dry through normal usage. If you must tip the machine prior to running out of fuel, use a hand fuel pump to remove the fuel. Always tip the machine onto its side with the dipstick down.

⚠ WARNING

Tipping the machine may cause the fuel to leak. Gasoline is flammable and explosive and can cause personal injury.

Run the engine dry or remove the gasoline with a hand pump; never siphon.

Replacing the Air Filter

Service Interval: Yearly

1. Perform the pre-maintenance procedures; refer to Preparing for Maintenance (page 16).
2. Use a screw driver to open the air-filter cover (Figure 34).

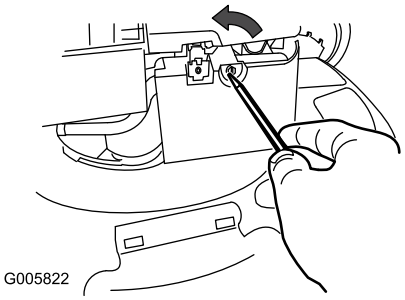

Figure 34

3. Replace the air filter (Figure 35).

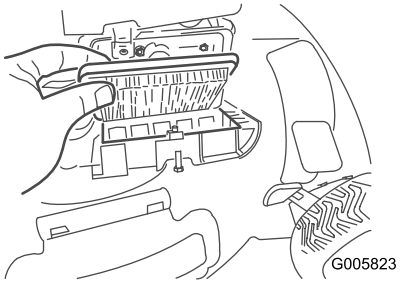

Figure 35

4. Install the air-filter cover.

Changing the Engine Oil

Service Interval: After the first 5 hours

Every 50 hours

Note: Max. fill: 0.59 L (20 oz), type: SAE 30 detergent oil with an API service classification of SF, SG, SH, SJ, SL, or higher.

1. Move the machine to a level surface.
2. Ensure that the fuel tank contains little or no fuel so that fuel does not leak out when you tip the machine onto its side.
3. Run the engine a few minutes before changing the oil to warm it.

   Note: Warm oil flows better and carries more contaminants.
4. Disconnect the wire from the spark plug; refer to Preparing for Maintenance (page 16).
5. Set an oil-drain pan beside the machine on the side of the dipstick.
6. Remove the dipstick from the oil-fill tube (Figure 36).

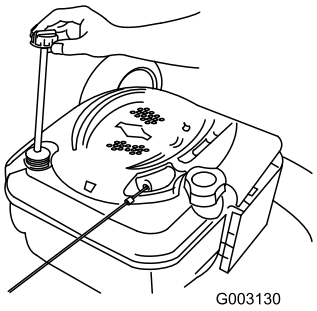

Figure 36

7. Tip the machine onto its side, with the oil-fill tube down, to drain the used oil out through the oil-fill tube into the oil-drain pan (Figure 37).

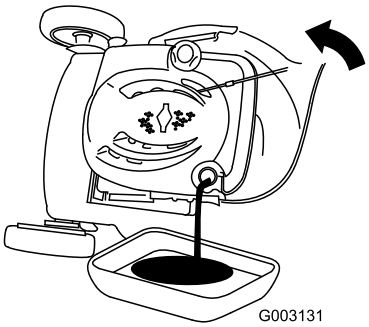

Figure 37

8. After draining the used oil, return the machine to the operating position.
9. Pour about 3/4 of the crankcase capacity of oil into the oil-fill tube.

Note: Max. fill: 0.59 L (20 oz), type: SAE 30 detergent oil with an API service classification of SF, SG, SH, SJ, SL, or higher.

10. Wipe off the dipstick end with a clean cloth.
11. Insert the dipstick into the oil-fill tube and screw it in until it stops.
12. Remove the dipstick and read the oil level; refer to Figure 38.

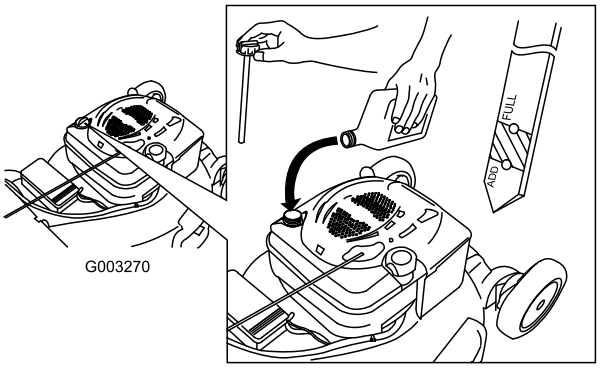

Figure 38

- If the oil level is below the **Add** mark on the dipstick, **slowly** add a small amount of oil to the oil-fill tube, and then repeat steps 10 through 12 until the oil level is at the **Full** mark on the dipstick.
- If the oil level is above the **Full** mark on the dipstick, drain the excess oil until the oil level is at the **Full** mark on the dipstick.

  Important: If the oil level in the crankcase is too low or too high and you run the engine, you may damage the engine.

13. Install the dipstick securely.
14. Recycle the used oil at a local recycling center.

Adjusting the Self-Propel Drive

Whenever you install a new self-propel cable or if the self-propel drive is out of adjustment, adjust the self-propel drive.

1. Turn the adjustment knob counterclockwise to loosen the cable adjustment (Figure 39).

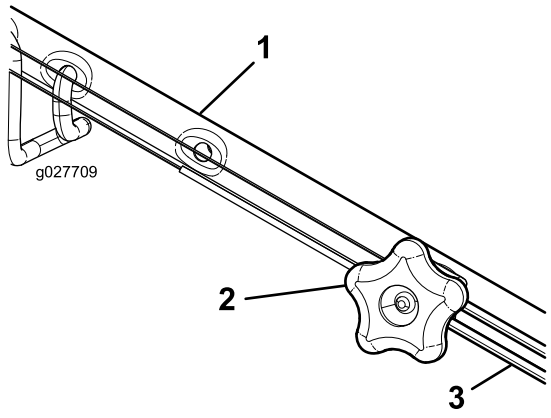

Figure 39

1. Handle (left side)
2. Adjustment knob
3. Self-propel-drive cable

2. Adjust the tension on the cable (Figure 39) by pulling it back or pushing it forward and holding that position.

   Note: Push the cable toward the engine to increase the traction; pull the cable away from the engine to decrease the traction.

3. Turn the adjustment knob clockwise to tighten the cable adjustment.

   Note: Tighten the knob firmly by hand.

Lubricating the Wheel Gears

Service Interval: Yearly

1. Wipe the grease fittings just inside the rear wheels with a clean rag (Figure 40).

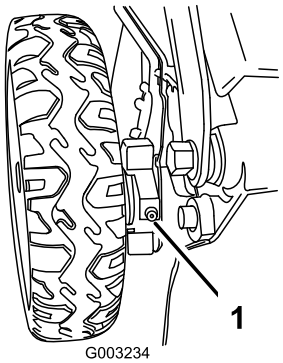

Figure 40

2. Install a grease gun onto each fitting and gently apply 2 or 3 pumps of #2 multi-purpose, lithium-base grease.

Replacing the Blade

Service Interval: Every 25 hours

Important: ***You will need a torque wrench to install the blade properly.*** **If you do not have a torque wrench or are uncomfortable performing this procedure, contact an Authorized Service Dealer.**

Examine the blade whenever you run out of gasoline. If the blade is damaged or cracked, replace it immediately. If the blade edge is dull or nicked, have it sharpened or replace it.

⚠ WARNING

The blade is sharp; contacting the blade can result in serious personal injury.

Wear gloves when servicing the blade.

1. Disconnect the spark-plug wire from the spark plug; refer to Preparing for Maintenance (page 16).
2. Tip the machine onto the side with the dipstick down.
3. Use a block of wood to hold the blade steady (Figure 41).

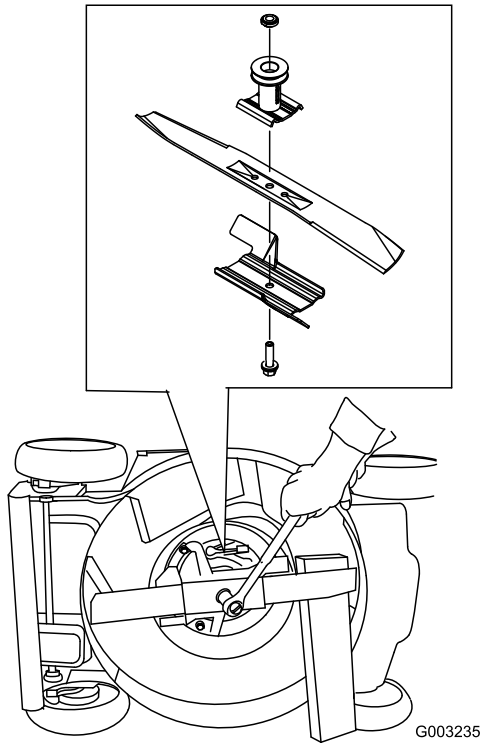

Figure 41

4. Remove the blade, saving all mounting hardware.
5. Install the new blade and all mounting hardware.

   Important: Position the curved ends of the blade to point toward the machine housing.
6. Use a torque wrench to tighten the blade bolt to 82 N-m (60 ft-lb).

   Important: A bolt torqued to 82 N-m (60 ft-lb) is very tight. While holding the blade with a block of wood, put your weight behind the ratchet or wrench and tighten the bolt securely. This bolt is very difficult to overtighten.

Cleaning under the Machine

Service Interval: Before each use or daily

⚠ WARNING

The machine may dislodge material from under the machine.

- **Wear eye protection.**
- **Stay in the operating position (behind the handle).**
- **Do not allow bystanders in the area.**

Note: For best results, clean the machine soon after you have completed mowing.

1. Lower the machine to its lowest cutting-height setting; refer to Adjusting the Cutting Height (page 10).
2. Move the machine onto a flat paved surface.
3. Attach a garden hose that is connected to a water supply to the washout port (Figure 42).

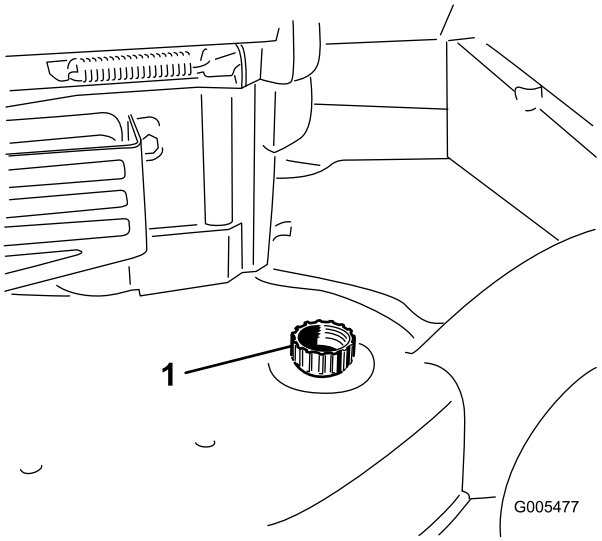

Figure 42

1. Washout port

4. Turn the water on.
5. Start the engine and run it until there are no more clippings that come out from under the machine.
6. Stop the engine.
7. Shut off the water and disconnect the garden hose from the machine.
8. Start the engine and run it for a few minutes to dry the underside of the machine.

Storage

Preparing the Machine for Storage

⚠ WARNING

Gasoline vapors can explode.

- **Do not store gasoline more than 30 days.**
- **Do not store the machine in an enclosure near an open flame.**
- **Allow the engine to cool before storing it.**

1. On the last refueling of the year, add fuel stabilizer to the fuel as directed by the engine manufacturer.
2. Run the machine until the engine stops from running out of fuel.
3. Allow the engine to run until it stops. When you can no longer start the engine, it is sufficiently dry.
4. Disconnect the wire from the spark plug.
5. Remove the spark plug, add 30 ml (1 oz) of oil through the spark plug hole, and pull the starter rope slowly several times to distribute oil throughout the cylinder to prevent cylinder corrosion during the off-season.
6. Loosely install the spark plug.
7. Tighten all nuts, bolts, and screws.

Folding the Handle

⚠ WARNING

Folding or unfolding the handle improperly can damage the cables, causing an unsafe operating condition.

- **Do not damage the cables when folding or unfolding the handle.**
- **If a cable is damaged, contact an Authorized Service Dealer.**

1. Rotate the handle forward (Figure 43).

   Important: Route the cables to the outside of the handle knobs as you fold the upper handle.

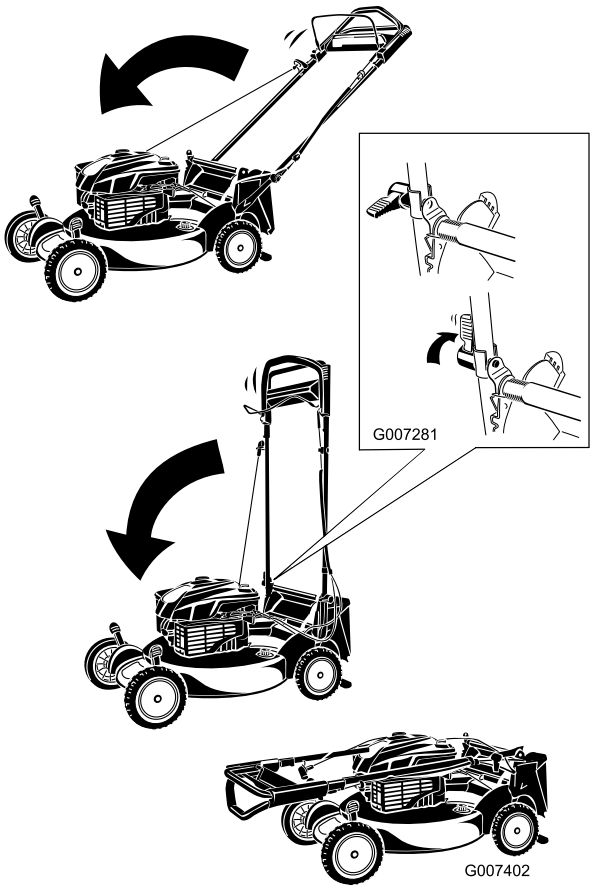

Figure 43

2. To unfold the handle, refer to 1 Assembling and Unfolding the Handle (page 5).

Removing the Machine from Storage

1. Check and tighten all fasteners.
2. Remove the spark plug and spin the engine rapidly using the starter to blow the excess oil from the cylinder.
3. Install the spark plug and tighten it with a torque wrench to 20 N-m (15 ft-lb).
4. Perform any needed maintenance procedures; refer to Maintenance (page 16).
5. Check the engine-oil level; refer to Checking the Engine-Oil Level (page 9).
6. Fill the fuel tank with fresh gasoline; refer to Filling the Fuel Tank (page 9).
7. Connect the wire to the spark plug.

Notes:

Notes:

International Distributor List

Distributor:	Country:	Phone Number:	Distributor:	Country:	Phone Number:
Agrolanc Kft	Hungary	36 27 539 640	Maquiver S.A.	Colombia	57 1 236 4079
Balama Prima Engineering Equip.	Hong Kong	852 2155 2163	Maruyama Mfg. Co. Inc.	Japan	81 3 3252 2285
B-Ray Corporation	Korea	82 32 551 2076	Mountfield a.s.	Czech Republic	420 255 704 220
Casco Sales Company	Puerto Rico	787 788 8383	Mountfield a.s.	Slovakia	420 255 704 220
Ceres S.A.	Costa Rica	506 239 1138	Munditol S.A.	Argentina	54 11 4 821 9999
CSSC Turf Equipment (pvt) Ltd.	Sri Lanka	94 11 2746100	Norma Garden	Russia	7 495 411 61 20
Cyril Johnston & Co.	Northern Ireland	44 2890 813 121	Oslinger Turf Equipment SA	Ecuador	593 4 239 6970
Cyril Johnston & Co.	Republic of Ireland	44 2890 813 121	Oy Hako Ground and Garden Ab	Finland	358 987 00733
Equiver	Mexico	52 55 539 95444	Parkland Products Ltd.	New Zealand	64 3 34 93760
Femco S.A.	Guatemala	502 442 3277	Perfetto	Poland	48 61 8 208 416
ForGarder OU	Estonia	372 384 6060	Pratoverde SRL.	Italy	39 049 9128 128
G.Y.K. Company Ltd.	Japan	81 726 325 861	Prochaska & Cie	Austria	43 1 278 5100
Geomechaniki of Athens	Greece	30 10 935 0054	RT Cohen 2004 Ltd.	Israel	972 986 17979
Golf international Turizm	Turkey	90 216 336 5993	Riversa	Spain	34 9 52 83 7500
Guandong Golden Star	China	86 20 876 51338	Lely Turfcare	Denmark	45 66 109 200
Hako Ground and Garden	Sweden	46 35 10 0000	Solvert S.A.S.	France	33 1 30 81 77 00
Hako Ground and Garden	Norway	47 22 90 7760	Spypros Stavrinides Limited	Cyprus	357 22 434131
Hayter Limited (U.K.)	United Kingdom	44 1279 723 444	Surge Systems India Limited	India	91 1 292299901
Hydroturf Int. Co Dubai	United Arab Emirates	97 14 347 9479	T-Markt Logistics Ltd.	Hungary	36 26 525 500
Hydroturf Egypt LLC	Egypt	202 519 4308	Toro Australia	Australia	61 3 9580 7355
Irrimac	Portugal	351 21 238 8260	Toro Europe NV	Belgium	32 14 562 960
Irrigation Products Int'l Pvt Ltd.	India	0091 44 2449 4387	Valtech	Morocco	212 5 3766 3636
Jean Heybroek b.v.	Netherlands	31 30 639 4611	Victus Emak	Poland	48 61 823 8369

European Privacy Notice

The Information Toro Collects
Toro Warranty Company (Toro) respects your privacy. In order to process your warranty claim and contact you in the event of a product recall, we ask you to share certain personal information with us, either directly or through your local Toro company or dealer.

The Toro warranty system is hosted on servers located within the United States where privacy law may not provide the same protection as applies in your country.

BY SHARING YOUR PERSONAL INFORMATION WITH US, YOU ARE CONSENTING TO THE PROCESSING OF YOUR PERSONAL INFORMATION AS DESCRIBED IN THIS PRIVACY NOTICE.

The Way Toro Uses Information
Toro may use your personal information to process warranty claims, to contact you in the event of a product recall and for any other purpose which we tell you about. Toro may share your information with Toro's affiliates, dealers or other business partners in connection with any of these activities. We will not sell your personal information to any other company. We reserve the right to disclose personal information in order to comply with applicable laws and with requests by the appropriate authorities, to operate our systems properly or for our own protection or that of other users.

Retention of your Personal Information
We will keep your personal information as long as we need it for the purposes for which it was originally collected or for other legitimate purposes (such as regulatory compliance), or as required by applicable law.

Toro's Commitment to Security of Your Personal Information
We take reasonable precautions in order to protect the security of your personal information. We also take steps to maintain the accuracy and current status of personal information.

Access and Correction of your Personal Information
If you would like to review or correct your personal information, please contact us by email at legal@toro.com.

Australian Consumer Law

Australian customers will find details relating to the Australian Consumer Law either inside the box or at your local Toro Dealer.

The Toro Warranty and The Toro GTS Starting Guarantee

Conditions and Products Covered

The Toro Company and its affiliate, Toro Warranty Company, pursuant to an agreement between them, jointly promise to repair for the original purchaser[1] the Toro Product listed below if defective in materials or workmanship or if the Toro GTS (Guaranteed to Start) engine will not start on the first or second pull, provided the routine maintenance required in the *Operator's Manual* have been performed.

The following time periods apply from the date of purchase:

Products	Warranty Period
Walk Power Mowers	
• Cast Deck	5 years Residential Use[2] 90 Days Commercial Use
• Engine	5 years GTS Guarantee, Residential Use[3]
• Battery	2 years
• Steel Deck	2 years Residential Use[2] 30 Days Commercial Use
• Engine	2 years GTS Guarantee, Residential Use[3]
TimeMaster Mowers	3 years Residential Use[2] 90 Days Commercial Use
• Engine	3 years GTS Guarantee, Residential Use[3]
• Battery	2 years
Electric Hand Held Products and Walk Power Mowers	2 years Residential Use[2] No Warranty for Commercial Use
Snowthrowers	
• Single Stage	2 years Residential Use[2] 45 Days Commercial Use
• Engine	2 years GTS Guarantee, Residential Use[3]
• Two Stage	3 years Residential Use[2] 45 Days Commercial Use
• Chute, chute deflector and impeller housing cover	Lifetime (original owner only)[5]
Electric Snowthrowers	2 years Residential Use[2] No Warranty for Commercial Use
All Ride-On Units Below	
• Engine	See engine manufacturer's warranty[4]
• Battery	2 years Residential Use[2]
• Attachments	2 years Residential Use[2]
DH Lawn & Garden Tractors	2 years Residential Use[2] 30 Days Commercial Use
XLS Lawn & Garden Tractors	3 years Residential Use[2] 30 Days Commercial Use
TimeCutter	3 years Residential Use[2] 30 Days Commercial Use
TITAN Mowers	3 years or 240 hours[5]
• Frame	Lifetime (original owner only)[6]

[1]Original Purchaser means the person who originally purchased the Toro Product.

[2]Residential use means use of the product on the same lot as your home. Use at more than one location is considered commercial use and the commercial use warranty would apply.

[3]The Toro GTS Starting Guarantee does not apply when the product is used commercially.

[4]Some engines used on Toro Products are warranted by the engine manufacturer.

[5]Whichever occurs first.

[6]Lifetime Frame Warranty - If the main frame, consisting of the parts welded together to form the tractor structure that other components such as the engine are secured to, cracks or breaks in normal use, it will be repaired or replaced, at Toro's option, under warranty at no cost for parts and labor. Frame failure due to misuse or abuse and failure or repair required due to rust or corrosion are not covered.

Warranty may be denied if the hour meter is disconnected, altered, or shows signs of being tampered with.

Owner Responsibilities

You must maintain your Toro Product by following the maintenance procedures described in the *Operator's Manual*. Such routine maintenance, whether performed by a dealer or by you, is at your expense.

Instructions for Obtaining Warranty Service

If you think that your Toro Product contains a defect in materials or workmanship, follow this procedure:

1. Contact your seller to arrange service of the product. If for any reason it is impossible for you to contact your seller, you may contact any Toro Authorized Distributor to arrange service. See attached Distributor List.
2. Bring the product and your proof of purchase (sales receipt) to the servicing outlet. If for any reason you are dissatisfied with the servicing outlet's analysis or with the assistance provided, contact us at:

   Toro Customer Care Department, RLC Division
   Toro Warranty Company
   8111 Lyndale Avenue South
   Bloomington, MN 55420-1196
   001–952–948–4707

Items and Conditions Not Covered

There is no other express warranty except for special emission system coverage and engine warranty coverage on some products. This express warranty does not cover the following:

- Cost of regular maintenance service or parts, such as filters, fuel, lubricants, oil changes, spark plugs, air filters blade sharpening or worn blades, cable/linkage adjustments, or brake and clutch adjustments
- Components failing due to normal wear
- Any product or part which has been altered or misused or neglected and requires replacement or repair due to accidents or lack of proper maintenance
- Pickup and delivery charges
- Repairs or attempted repairs by anyone other than an Authorized Toro Service Dealer
- Repairs necessary due to failure to follow recommended fuel procedure (consult *Operator's Manual* for more details)
  - Removing contaminants from the fuel system is not covered
  - Use of old fuel (more than one month old) or fuel which contains more than 10% ethanol or more that 15% MTBE
  - Failure to drain the fuel system prior to any period of non-use over one month
- Repairs or adjustments to correct starting difficulties due to the following:
  - Failure to follow proper maintenance procedures or recommended fuel procedure
  - Rotary mower blade striking an object
- Special operational conditions where starting may require more than two pulls:
  - First time starts after extended period of non-use over three months or seasonal storage
  - Cool temperature starts such as those found in early spring and late autumn
  - Improper starting procedures - if you are having difficulty starting your unit, please check the *Operator's Manual* to ensure that you are using the correct starting procedures. This can save an unnecessary visit to an Authorized Toro Service Dealer.

General Conditions

The purchaser is covered by the national laws of each country. The rights to which the purchaser is entitled with the support of these laws are not restricted by this warranty.