Form No. 3388-659 Rev A

22in Recycler® Lawn Mower

Model No. 20373—Serial No. 315000001 and Up

Operator's Manual

Replacement parts are available from an Authorized Service Dealer or at www.shoptoro.com.

Introduction

This rotary-blade, walk-behind lawn mower is intended to be used by residential homeowners. It is designed primarily for cutting grass on well-maintained lawns on residential properties. It is not designed for cutting brush or for agricultural uses.

Read this information carefully to learn how to operate and maintain your product properly and to avoid injury and product damage. You are responsible for operating the product properly and safely.

You may contact Toro directly at www.Toro.com for product and accessory information, help finding a dealer, or to register your product.

Whenever you need service, genuine Toro parts, or additional information, contact an Authorized Service Dealer or Toro Customer Service and have the model and serial numbers of your product ready. Figure 1 identifies the location of the model and serial numbers on the product.

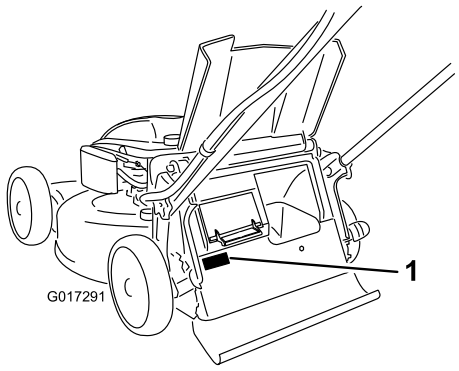

Figure 1

1. Model and serial number plate

Write the product model and serial numbers in the space below:

Model No. _____

Serial No. _____

This manual identifies potential hazards and has safety messages identified by the safety alert symbol (Figure 2), which signals a hazard that may cause serious injury or death if you do not follow the recommended precautions.



Figure 2

1. Safety alert symbol

This manual uses 2 words to highlight information. **Important** calls attention to special mechanical information and **Note** emphasizes general information worthy of special attention.

⚠ WARNING

CALIFORNIA
Proposition 65 Warning

This product contains a chemical or chemicals known to the State of California to cause cancer, birth defects, or reproductive harm.

The engine exhaust from this product contains chemicals known to the State of California to cause cancer, birth defects, or other reproductive harm.

Important: This engine is not equipped with a spark arrester muffler. It is a violation of California Public Resource Code Section 4442 to use or operate the engine on any forest-covered, brush-covered, or grass-covered land. Other states or federal areas may have similar laws.

This spark ignition system complies with Canadian ICES-002.

The enclosed *Engine Owner's Manual* is supplied for information regarding the US Environmental Protection Agency (EPA) and the California Emission Control Regulation of emission systems, maintenance, and warranty. Replacements may be ordered through the engine manufacturer.

Net Torque: The gross or net torque of this engine was laboratory rated by the engine manufacturer in accordance with the Society of Automotive Engineers (SAE) J1940. As configured to meet safety, emission, and operating requirements, the actual engine torque on this class of mower

© 2014—The Toro® Company
8111 Lyndale Avenue South
Bloomington, MN 55420

Register at www.Toro.com.

Original Instructions (EN)
Printed in the USA
All Rights Reserved

3388-659 A

will be significantly lower. Go to www.Toro.com to view specifications on your mower model.

Contents

Introduction 1
Safety 2
General Operation 2
Slope Operation 3
Children 3
Service 3
Safety and Instructional Decals 4
Setup 5
1 Installing the Blade-Control Bar 5
2 Installing the Handle 5
3 Installing the Recoil-Starter Rope in the Rope Guide 6
4 Filling the Engine with Oil 7
5 Assembling the Grass Bag 8
Product Overview 9
Operation 9
Filling the Fuel Tank 9
Checking the Engine-Oil Level 10
Adjusting the Cutting Height 10
Starting the Engine 11
Using the Self-Propel Drive 11
Stopping the Engine 12
Engaging the Blade 12
Disengaging the Blade 12
Checking the Blade-Brake Clutch Operation 12
Recycling the Clippings 13
Bagging the Clippings 13
Side-Discharging the Clippings 14
Operating Tips 15
Maintenance 16
Recommended Maintenance Schedule(s) 16
Preparing for Maintenance 16
Replacing the Air Cleaner 17
Changing the Engine Oil 17
Adjusting the Self-Propel Drive 18
Replacing the Blade 18
Cleaning the Blade-Brake-Clutch Shield 19
Cleaning the Machine 19
Storage 20
Preparing the Machine for Storage 20
Folding the Handle 20
Remove the Machine from Storage 20

Safety

This lawn mower meets or exceeds the CPSC blade safety requirements for walk-behind rotary lawn mowers at the time of production.

Read and understand the contents of this manual before you start the engine.

The safety alert symbol (Figure 2) is used to alert you to potential personal injury hazards. Obey all safety messages that follow this symbol to avoid possible injury or death. Improperly using or maintaining this mower could result in injury or death. To reduce this potential, comply with the following safety instructions.

The following instructions have been adapted from the ANSI/OPEI standard B71.1-2012.

This cutting machine can amputate hands and feet and throw objects. Failure to observe the following safety instructions could result in serious injury or death.

General Operation

- Read, understand, and follow all instructions on the machine and in the manual(s) before starting the engine.
- Do not put hands or feet near or under the machine. Keep clear of the discharge opening at all times.
- Only allow responsible adults who are familiar with the instructions to operate this machine.
- Clear the area of objects such as rocks, wire, toys, etc., which could be thrown by the blade. Stay behind the handle when the engine is running.
- Be sure the area is clear of bystanders before operating. Stop machine if anyone enters the area.
- Do not operate the machine barefooted or while wearing sandals. Always wear substantial, slip-resistant footwear.
- Do not pull the machine backward unless it is absolutely necessary. Always look down and behind before and while moving backward with the machine.
- Never direct discharged material toward anyone. Avoid discharging material against a wall or obstruction. Material may ricochet back toward you or bystanders. Stop the blade when crossing gravel surfaces.
- Do not operate the machine without the entire grass catcher, discharge guard, rear guard, or other safety protective devices in place and working.
- Never leave a running machine unattended.
- Stop the engine and wait until the blade comes to a complete stop before cleaning the machine, removing grass catcher, or unclogging the discharge guard.
- Operate the machine only in daylight or good artificial light.
- Do not operate the machine while under the influence of alcohol or drugs.
- Never operate the machine in wet grass. Always be sure of your footing; walk; never run.
- Disengage the drive system, if so equipped, before starting the engine.
- If the machine should start to vibrate abnormally, stop the engine and check for the cause immediately. Vibration is generally a warning of trouble.

- Always wear eye protection when operating the machine.
- See the manufacturer's instructions for proper operation and installation of accessories. Use only accessories approved by the manufacturer.

Slope Operation

Slopes are a major factor related to slip and fall accidents, which can result in severe injury. Operation on all slopes requires extra caution. If you feel uneasy on a slope, do not mow it.

- Mow across the face of slopes; never up and down. Exercise extreme caution when changing direction on slopes.
- Watch for holes, ruts, bumps, rocks, or other hidden objects. Uneven terrain could cause a slip-and-fall accident. Tall grass can hide obstacles.
- Do not mow on wet grass or excessively steep slopes. Poor footing could cause a slip-and-fall accident.
- Do not mow near drop-offs, ditches, or embankments. You could lose your footing or balance.

Children

Tragic accidents can occur if the operator is not alert to the presence of children. Children are often attracted to the machine and the mowing activity. **Never** assume that children will remain where you last saw them.

- Keep children out of the mowing area and under the watchful care of a responsible adult other than the operator.
- Be alert and turn the machine off if a child enters the area.
- Never allow children to operate the machine.
- Use extra care when approaching blind corners, shrubs, trees, or other objects that may block your view of a child.

Service

Safe Handling of Gasoline

To avoid personal injury or property damage, use extreme care in handling gasoline. Gasoline is extremely flammable and the vapors are explosive.

- Extinguish all cigarettes, cigars, pipes, and other sources of ignition.
- Use only an approved gasoline container.
- Never remove the fuel cap or add fuel with the engine running. Allow the engine to cool before refueling.
- Never refuel the machine indoors.
- Never store the machine or fuel container where there is an open flame, spark, or pilot light, such as on a water heater or on other appliances.
- Never fill containers inside a vehicle or on a truck or trailer bed with a plastic liner. Always place containers on the ground, away from your vehicle before filling.
- Remove gas-powered equipment from the truck or trailer and refuel it on the ground. If this is not possible, then refuel such equipment with a portable container rather than from a gasoline dispenser nozzle.
- Keep the nozzle in contact with the rim of the fuel tank or container opening at all times until fueling is complete. Do not use a nozzle lock-open device.
- If fuel is spilled on clothing, change clothing immediately.
- Never overfill the fuel tank. Replace the fuel cap and tighten it securely.

⚠ WARNING

Exhaust contains carbon monoxide, an odorless, deadly poison that can kill you.

Do not run the engine indoors or in an enclosed area.

General Service

- Never operate the machine in a closed area.
- Keep all nuts and bolts tight to be sure that the equipment is in safe working condition.
- Never tamper with safety devices. Check their proper operation regularly.
- Keep machine free of grass, leaves, or other debris build-up. Clean up oil or fuel spillage and remove any fuel-soaked debris. Allow the machine to cool before storing it.
- If you strike a foreign object, stop and inspect the machine. Repair the machine, if necessary, before starting it.
- Never make any adjustments or repairs with the engine running. Disconnect the spark-plug wire and ground against the engine to prevent it from unintentionally starting.
- Check the grass catcher components and the discharge guard frequently and replace them with the manufacturer's recommended parts when necessary.
- Mower blades are sharp. Wrap the blade or wear gloves, and use extra caution when servicing them.
- Do not change the engine governor setting or overspeed the engine.
- Maintain or replace safety and instruction labels as necessary.
- To best protect your investment and maintain optimal performance of your Toro equipment, count on Toro genuine parts. When it comes to reliability, Toro delivers replacement parts designed to the exact engineering specifications of our equipment. For peace of mind, insist on Toro genuine parts.

Safety and Instructional Decals

Important: **Safety and instruction decals are located near areas of potential danger. Replace damaged decals.**

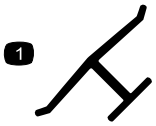

Manufacturer's Mark

1. Indicates the blade is identified as a part from the original machine manufacturer.



117–2718



94-8072

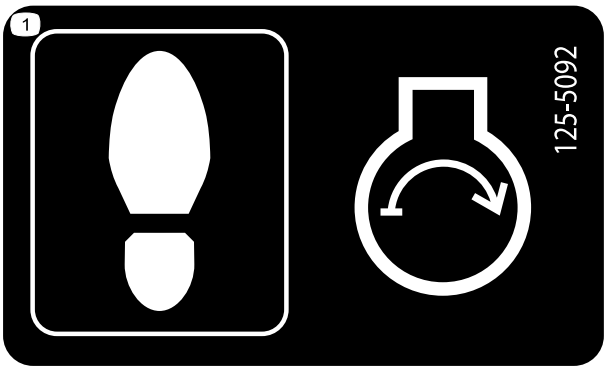

125–5092

1. Step on the deck to start the engine.



112-8867

1. Lock
2. Unlock

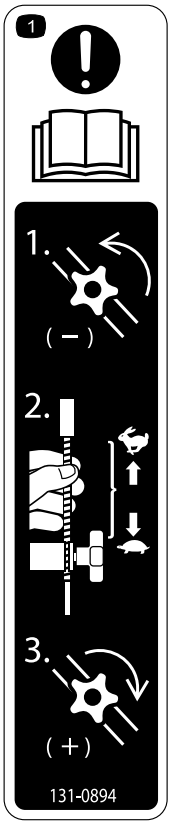

131-0894

Traction Adjustment

1. Attention; read the *Operator's Manual*—1) Loosen the knob by turning it counter clockwise; 2) Pull the cable(s) away from the engine to decrease the traction, or push the cable(s) toward the engine to increase the traction; 3) Tighten the knob by turning it clockwise.

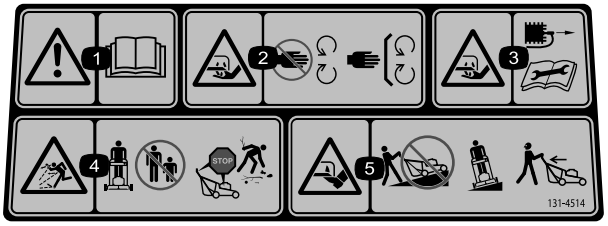

131–4514

1. Warning—read the *Operator's Manual*.
2. Cutting/dismemberment hazard of hand or foot, mower blade—stay away from moving parts; keep all guards and shields in place.
3. Cutting/dismemberment hazard of hand or foot, mower blade—disconnect the spark-plug wire and read the instructions before servicing or performing maintenance.
4. Thrown object hazard—keep bystanders a safe distance from the machine; stop the engine before leaving the operating position; pick up any debris before mowing.
5. Cutting/dismemberment hazard of hand or foot, mower blade—do not operate up and down slopes; operate side to side on slopes; look behind you when backing up.

Setup

Important: **Remove and discard the protective plastic sheet that covers the engine.**

1

Installing the Blade-Control Bar

No Parts Required

Procedure

Install the blade-control bar into the upper handle (Figure 3).

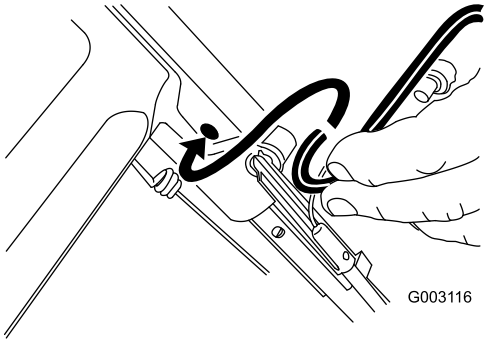

Figure 3

2

Installing the Handle

No Parts Required

Procedure

⚠ WARNING

Folding or unfolding the handle improperly can damage the cables, causing an unsafe operating condition.

- **Do not damage the cables when folding or unfolding the handle.**
- **If a cable is damaged, contact an Authorized Service Dealer.**

1. Remove and retain the handle knobs from the machine housing (Figure 4).

   Important: Route the cables to the outside of the handle knobs as you install the handle.

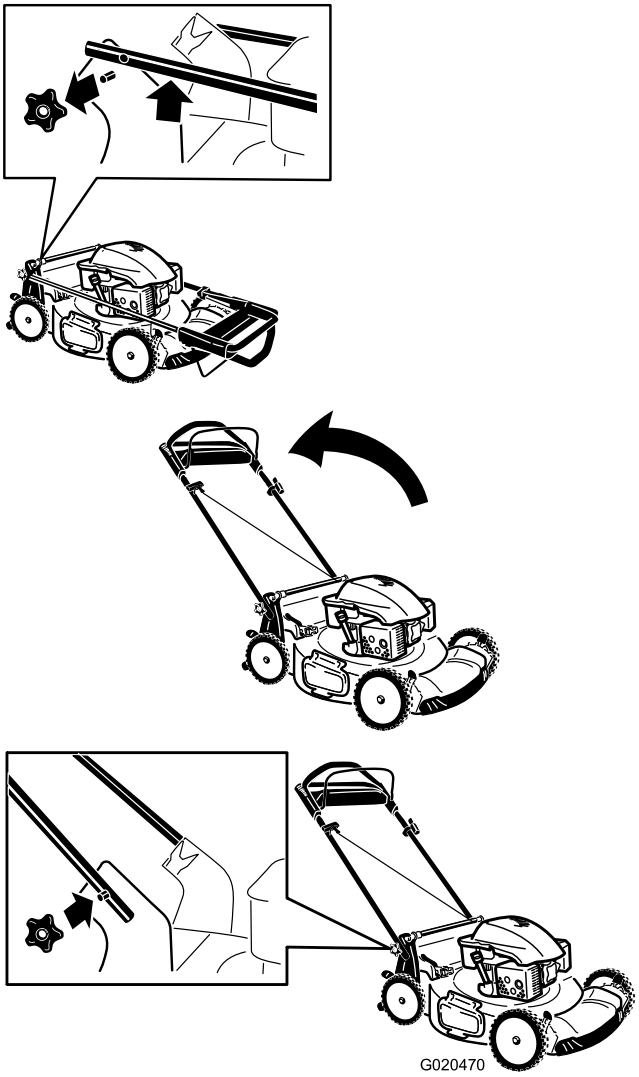

Figure 4

2. Move the handle to the operating position.
3. Install and tighten the handle knobs that you removed in step 1 (Figure 4).

3

Installing the Recoil-Starter Rope in the Rope Guide

No Parts Required

Procedure

Important: To start the engine safely and easily whenever you use the machine, install the recoil-starter rope in the rope guide.

Pull the recoil-starter rope through the rope guide on the handle (Figure 5).

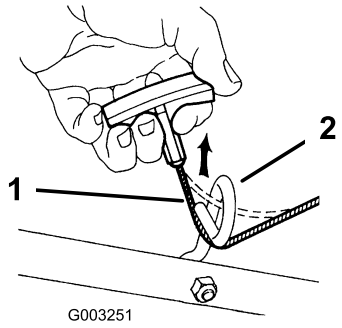

Figure 5

1. Recoil-starter rope
2. Rope guide

4

Filling the Engine with Oil

No Parts Required

Procedure

Important: Your machine does not come with oil in the engine. Before starting the engine, fill the engine with oil.

Max. fill: 0.59 L (20 oz), type: SAE 30 or SAE 10W-30 detergent oil with an API service classification of SF, SG, SH, SJ, SL, or higher.

Note: When the crankcase is empty, pour about 3/4 of the crankcase capacity of oil in the crankcase, then do the following:

1. Move the machine to a level surface.
2. Remove the dipstick (Figure 6).

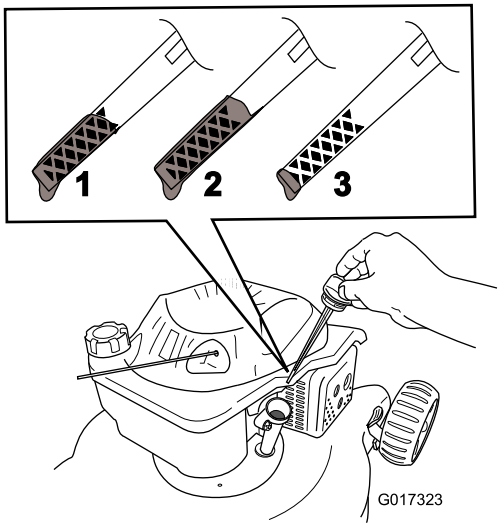

Figure 6

1. The oil level is at its maximum.
2. The oil level is too high—remove oil from the crankcase.
3. The oil level is too low—add oil to the crankcase.

3. Wipe the dipstick clean with a clean cloth.
4. Insert the dipstick into the oil-fill tube **but do not screw it in**, then remove the dipstick.
5. Read the oil level on the dipstick (Figure 6).
   - If the oil level on the dipstick is too low, slowly pour a small amount of oil into the oil-fill tube, wait 3 minutes, and repeat steps 3 through 5 until the oil level on the dipstick is at the correct level.
   - If the oil level on the dipstick is too high, drain the excess oil until the oil level on the dipstick is at the correct level. Refer to Changing the Engine Oil (page 17).

   Important: If the oil level in the crankcase is too low or too high and you run the engine, you may damage the engine.
6. Install the dipstick securely.

Important: *Change the engine oil after the first 5 operating hours*; change it yearly thereafter. Refer to Changing the Engine Oil (page 17).

5

Assembling the Grass Bag

No Parts Required

Procedure

1. Slip the grass bag over the frame as shown in Figure 7.

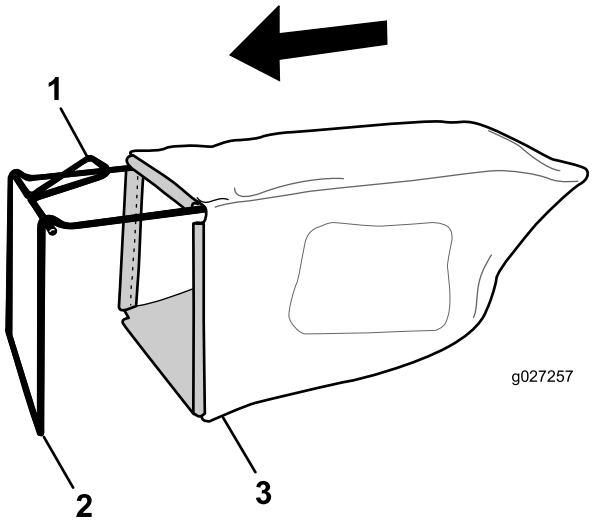

Figure 7

1. Handle
2. Frame
3. Grass bag

Note: Do not slip the bag over the handle (Figure 7).

2. Hook the bottom channel of the bag onto the bottom of the frame (Figure 8).

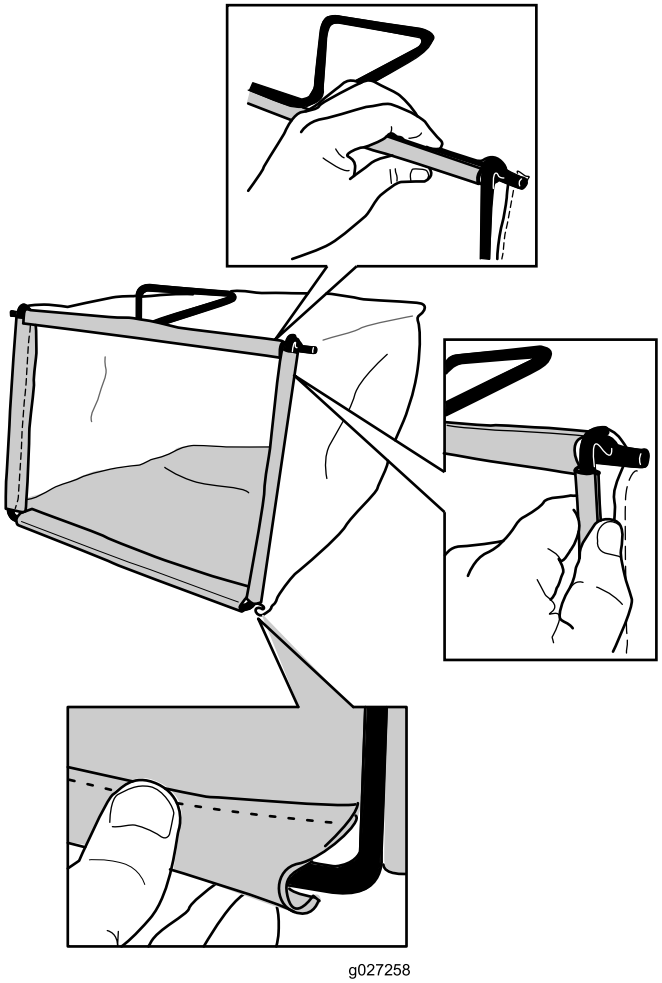

Figure 8

3. Hook the top and side channels of the bag onto the top and sides of the frame, respectively (Figure 8).

Product Overview

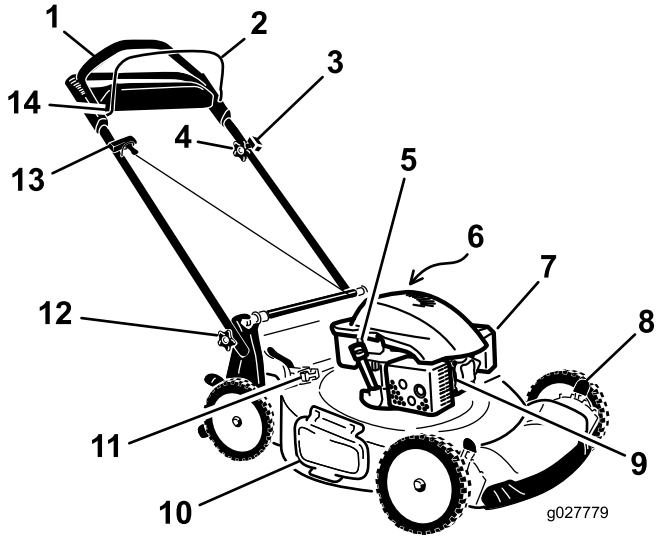

Figure 9

1.	Handle	8.	Cutting-height lever (4)
2.	Blade-control bar	9.	Spark plug
3.	Ignition switch	10.	Side-discharge deflector
4.	Adjustment knob for the self-propel drive	11.	Bag-on-demand lever
5.	Oil fill/dipstick	12.	Handle knob (2)
6.	Fuel-tank cap (not shown)	13.	Recoil-start handle
7.	Air filter	14.	Control-bar lock

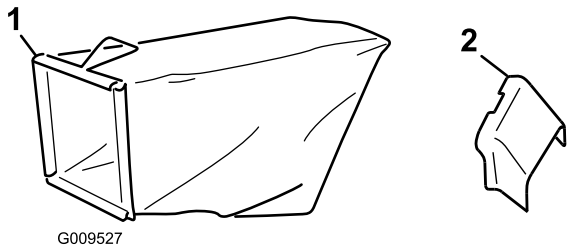

Figure 10

1.	Grass bag	2.	Side-discharge chute

Operation

Filling the Fuel Tank

⚠ DANGER

Gasoline is extremely flammable and explosive. A fire or explosion from gasoline can burn you and others.

- **To prevent a static charge from igniting the gasoline, place the container and/or machine directly on the ground before filling, not in a vehicle or on an object.**
- **Fill the tank outdoors when the engine is cold. Wipe up spills.**
- **Do not handle gasoline when smoking or around an open flame or sparks.**
- **Store gasoline in an approved fuel container, out of the reach of children.**

- For best results, use only clean, fresh (less than 30 days old), unleaded gasoline with an octane rating of 87 or higher ((R+M)/2 rating method).
- Oxygenated fuel with up to 10% ethanol or 15% MTBE by volume is acceptable.
- **Ethanol:** Gasoline with up to 10% ethanol (gasohol) or 15% MTBE (methyl tertiary butyl ether) by volume is acceptable. Ethanol and MTBE are not the same. Gasoline with 15% ethanol (E15) by volume is not approved for use. Never use gasoline that contains more than 10% ethanol by volume, such as E15 (contains 15% ethanol), E20 (contains 20% ethanol), or E85 (contains up to 85% ethanol). Using unapproved gasoline may cause performance problems and/or engine damage which may not be covered under warranty.
- **Do not** use gasoline containing methanol.
- **Do not** store fuel either in the fuel tank or in fuel containers over the winter unless a fuel stabilizer is used.
- **Do not** add oil to gasoline.

Fill the fuel tank with fresh unleaded regular gasoline from a major name-brand service station (Figure 11).

Important: To reduce starting problems, add fuel stabilizer to the fuel all season, mixing it with gasoline less than 30 days old.

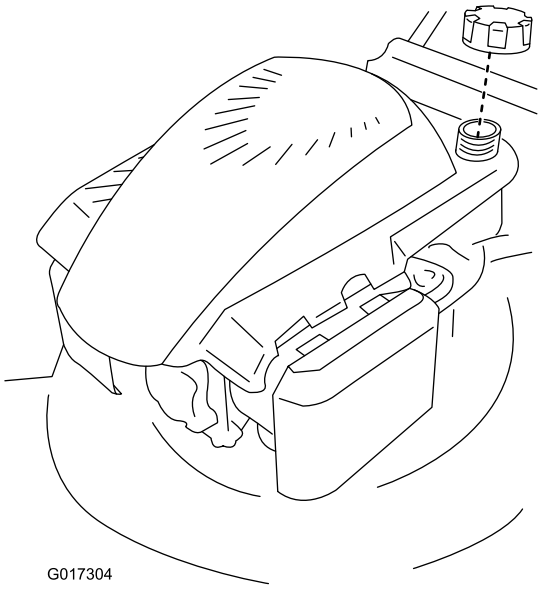

Figure 11

Checking the Engine-Oil Level

Service Interval: Before each use or daily

1. Move the machine to a level surface.
2. Remove the dipstick (Figure 12).

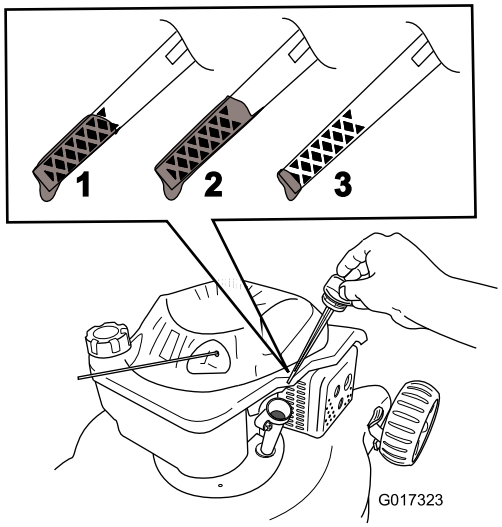

Figure 12

1. The oil level is at its maximum.
2. The oil level is too high—remove oil from the crankcase.
3. The oil level is too low—add oil to the crankcase.

3. Wipe the dipstick clean with a clean cloth.
4. Insert the dipstick into the oil-fill tube **but do not screw it in**, then remove the dipstick.
5. Read the oil level on the dipstick (Figure 12).
   - If the oil level on the dipstick is too low, slowly pour a small amount of oil into the oil-fill tube, wait 3 minutes, and repeat steps 3 through 5 until the oil level on the dipstick is at the correct level.
   - If the oil level on the dipstick is too high, drain the excess oil until the oil level on the dipstick is at the correct level. Refer to Changing the Engine Oil (page 17).

   Important: If the oil level in the crankcase is too low or too high and you run the engine, you may damage the engine.
6. Install the dipstick securely.

Adjusting the Cutting Height

⚠ WARNING

Adjusting the cutting height may bring you into contact with the moving blade, causing serious injury.

- **Stop the engine and wait for all moving parts to stop.**
- **Do not put your fingers under the housing when adjusting the cutting height.**

⚠ CAUTION

If the engine has been running, the muffler will be hot and can severely burn you. Keep away from the hot muffler.

Adjust the cutting height as desired. Set the front wheels to the same height as the rear wheels (Figure 13).

Note: To raise the machine, move the front cutting height levers rearward and the rear cutting height levers forward. To lower the machine, move the front cutting height levers forward and the rear cutting height levers rearward.

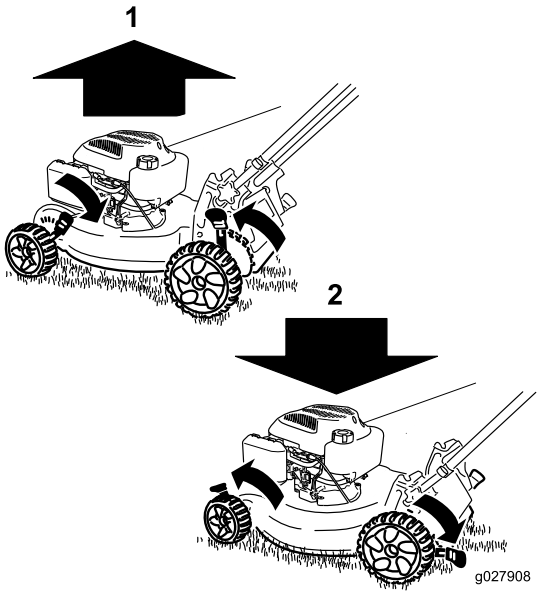

Figure 13

1. Raise the machine
2. Lower the machine

Note: The cutting height settings are 25 mm (1 inch); 35 mm (1-3/8 inches); 44 mm (1-3/4 inches); 54 mm (2-1/8 inches); 64 mm (2-1/2 inches); 73 mm (2-7/8 inches); 83 mm (3-1/4 inches); 92 mm (3-5/8 inches); and 102 mm (4 inches).

Starting the Engine

1. If the ignition switch on your machine (Figure 14) is a toggle switch (with both an "I" and a "Stop"), push the switch to the ("I") position. Otherwise, go to step 2.

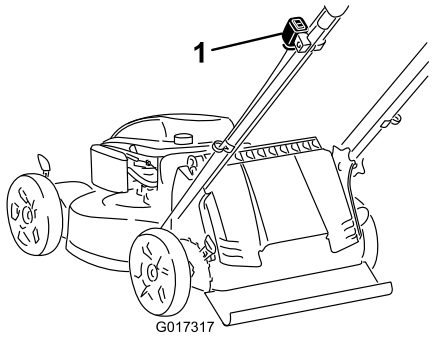

Figure 14

1. Ignition toggle switch

2. Pull the recoil starter lightly until you feel resistance, then pull it sharply (Figure 15). Allow the rope to return to the handle slowly.

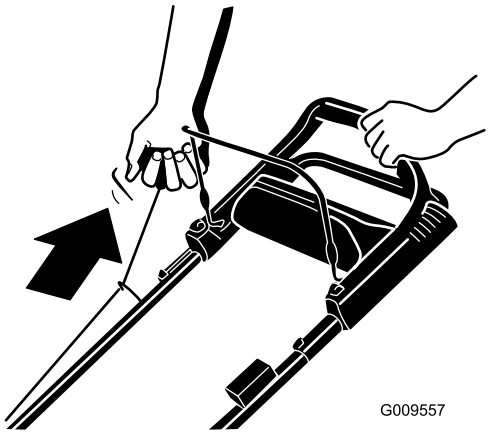

Figure 15

Note: If the machine does not start after several attempts, contact an Authorized Service Dealer.

Using the Self-Propel Drive

To operate the self-propel drive, simply walk with your hands on the upper handle and your elbows at your sides, and the machine will automatically keep pace with you (Figure 16).

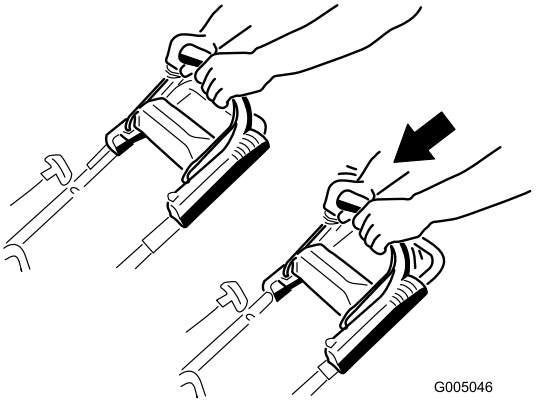

Figure 16

Note: If the machine does not freely roll backward after self-propelling, stop walking, hold your hands in place, and allow the machine to roll a couple of inches/centimeters forward to disengage the wheel drive. You can also try reaching just under the personal pace handle to the metal handle and push the machine forward a couple of inches/centimeters. If the machine still does not roll backward easily, contact an Authorized Service Dealer.

Stopping the Engine

If the ignition switch on your machine (Figure 17) is a toggle switch (with both an "I" and a "Stop"), push the switch to the Stop position. Otherwise, hold down the switch in the Stop position until the engine stops.

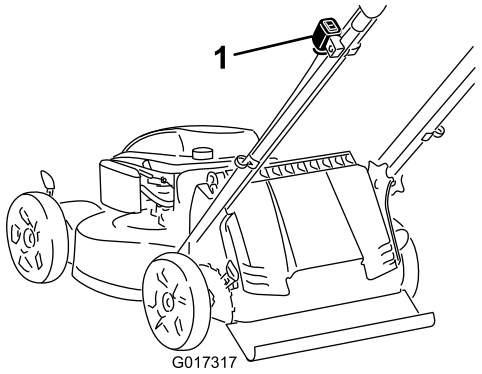

Figure 17

1. Ignition-toggle switch

Engaging the Blade

When you start your engine, the blade does not turn. You must engage the blade to mow.

1. Pull the control-bar lock back (Figure 18).

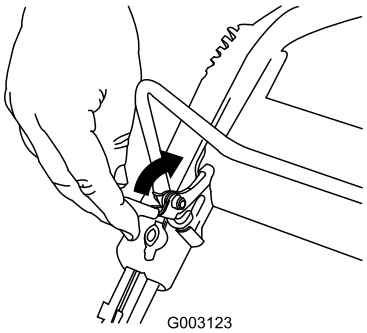

Figure 18

2. Pull the blade-control bar to the handle (Figure 19).

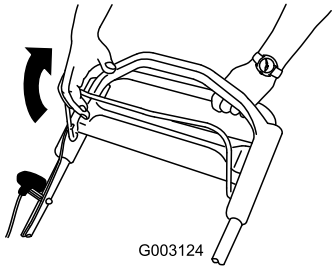

Figure 19

3. Hold the blade-control bar against the handle (Figure 20).

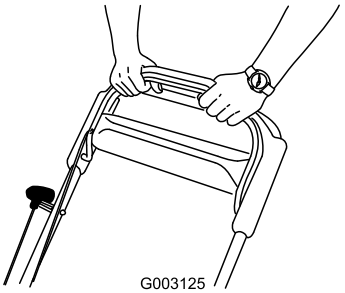

Figure 20

Disengaging the Blade

Release the blade —control bar (Figure 21).

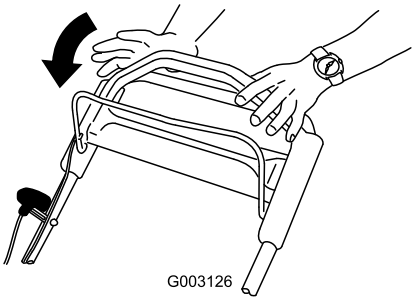

Figure 21

Important: When you release the blade-control bar, the blade should stop within 3 seconds. If it does not stop properly, stop using your machine immediately and contact an Authorized Service Dealer.

Checking the Blade-Brake Clutch Operation

Check the control bar before each use to ensure that the blade-brake clutch system is operating properly.

Using the Grass Bag

Service Interval: Before each use or daily

You can use the grass bag to perform an additional test to check the blade-brake clutch.

1. Install the empty grass bag on the machine.
2. Start the engine.
3. Engage the blade.

   Note: The bag should begin to inflate, indicating that the blade is engaged and rotating.
4. Release the blade-control bar.

   Note: If the bag does not immediately deflate, the blade is still rotating. The blade-brake clutch may be deteriorating and, if ignored, could result in an unsafe operating condition. Have the machine inspected and serviced by an Authorized Service Dealer.

5. Stop the engine and wait for all moving parts to stop.

Not Using the Grass Bag

1. Move the machine onto a paved surface in a non-windy area.
2. Set all 4 wheels to the 83 mm (3-1/4 inch) cutting-height setting.
3. Take a half sheet of newspaper and crumple it into a ball small enough to go under the machine housing (about 76 mm (3 inches) in diameter).
4. Place the newspaper ball about 13 cm (5 inches) in front of the machine.
5. Start the engine.
6. Engage the blade.
7. Release the blade-control bar.
8. Immediately push the machine over the newspaper ball.
9. Stop the engine and wait for all moving parts to stop.
10. Go to the front of the machine and check the newspaper ball.

    Note: If the newspaper ball did not go under the machine, repeat steps 4 through 10.
11. If the newspaper is unravelled or shredded, the blade did not stop properly, which could result in an unsafe operating condition. Contact an Authorized Service Dealer.

Recycling the Clippings

Your machine comes from the factory ready to recycle the grass and leaf clippings back into the lawn.

If the grass bag is on the machine and the bag-on-demand lever is in the bagging position, move the lever to the recycling position; refer to Operating the Bag-on-Demand Lever (page 13) before recycling the clippings. If the side-discharge chute is on the machine, remove it; refer to Removing the Side-Discharge Chute (page 15) before recycling the clippings.

Bagging the Clippings

Use the grass bag when you want to collect grass and leaf clippings from the lawn.

Note: Ensure the bag is seated in the correct position.

⚠ WARNING

A worn grass bag could allow small stones and other similar debris to be thrown toward you or bystanders, resulting in serious personal injury or death.

Check the grass bag frequently. If it is damaged, install a new Toro replacement bag.

If the side-discharge chute is on the machine, remove it; refer to Removing the Side-Discharge Chute (page 15) before bagging the clippings. If the bag-on-demand lever is in the recycling position, move it to the bagging position (refer to Operating the Bag-on-Demand Lever).

⚠ WARNING

The blade is sharp; contacting the blade can result in serious personal injury.

Stop the engine and wait for all moving parts to stop before leaving the operating position.

Installing the Grass Bag

1. Raise and hold up the rear deflector (Figure 22).

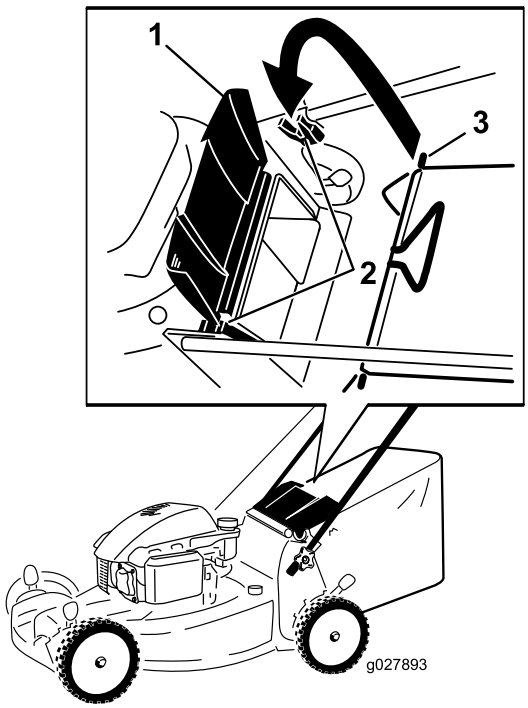

Figure 22

1. Rear deflector
2. Notches
3. Grass-bag pin (2)

2. Install the grass bag, ensuring that the pins on the bag rest in the notches in the handle brackets (Figure 22).
3. Lower the rear deflector.

Removing the Grass Bag

To remove the bag, reverse the steps above.

Operating the Bag-on-Demand Lever

The bag-on-demand feature allows you to either collect or recycle grass and leaf clippings while the grass bag is attached to the machine.

- For bagging the grass and leaf clippings, press the button on the bag-on-demand lever and move the lever forward until the button on the lever pops up (Figure 23).

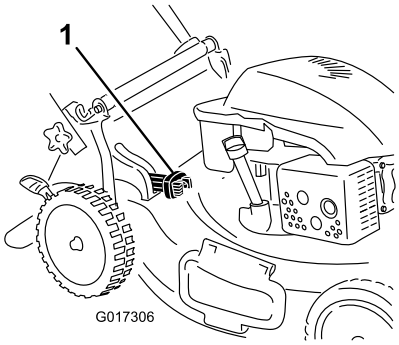

Figure 23

1. Bag-on-demand lever (in bagging position)

- For recycling the grass and leaf clippings, press the button on the lever and move the lever rearward until the button on the lever pops up.

Important: For proper operation, remove any grass clippings and debris from the bag-on-demand door and the surrounding opening (Figure 24) before you move the bag-on-demand lever from one position to another.

⚠ WARNING

The blade is sharp; contacting the blade can result in serious personal injury. Also, an open rear discharge area could allow small stones and other similar debris to be thrown in the operator's or bystander's direction and result in serious personal injury or death to the operator or bystanders.

Stop the engine and wait for all moving parts to stop before cleaning the bag-on-demand door and the surrounding opening.

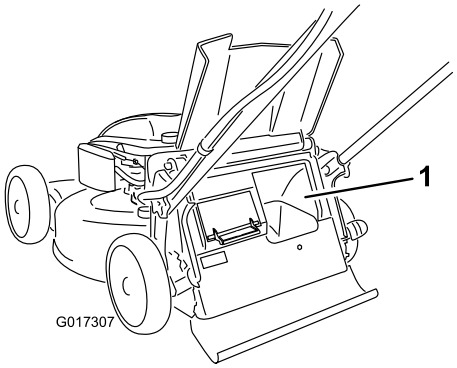

Figure 24

1. Clean here

Side-Discharging the Clippings

Use the side discharge for cutting very tall grass.

If the grass bag is on the machine and the bag-on-demand lever is in the bagging position, move the lever to the recycling position; refer to Operating the Bag-on-Demand Lever (page 13).

⚠ WARNING

The blade is sharp; contacting the blade can result in serious personal injury.

Stop the engine and wait for all moving parts to stop before leaving the operating position.

Installing the Side-Discharge Chute

Lift up the side deflector and install the side-discharge chute (Figure 25).



Figure 25

Removing the Side-Discharge Chute

To remove the side-discharge chute, lift up the side deflector, remove the side-discharge chute, and lower the side-discharge deflector.

Operating Tips

General Mowing Tips

- Clear the area of sticks, stones, wire, branches, and other debris that the blade could hit.
- Avoid striking solid objects with the blade. Never deliberately mow over any object.
- If the machine strikes an object or starts to vibrate, immediately stop the engine, disconnect the wire from the spark plug, and examine the machine for damage.
- For best performance, install a new blade before the cutting season begins.
- Replace the blade when necessary with a Toro replacement blade.

Cutting Grass

- Cut only about a third of the grass blade at a time. Do not cut below the 54 mm (2-1/8 inch) setting unless the grass is sparse or it is late fall when grass growth begins to slow down. Refer to Adjusting the Cutting Height (page 10).
- When cutting grass over 15 cm (6 inches) tall, mow at the highest cutting height setting and walk slower; then mow again at a lower setting for the best lawn appearance. If the grass is too long, the machine may plug and cause the engine to stall.
- Mow only dry grass or leaves. Wet grass and leaves tend to clump on the yard and can cause the machine to plug or the engine to stall.

⚠ WARNING

Wet grass or leaves can cause serious injury if you slip and contact the blade. Mow only in dry conditions.

- Be aware of a potential fire hazard in very dry conditions, follow all local fire warnings, and keep the machine free of dry grass and leaf debris.
- Alternate the mowing direction. This helps disperse the clippings over the lawn for even fertilization.
- If the finished lawn appearance is unsatisfactory, try 1 or more of the following:
  - Replace the blade or have it sharpened.
  - Walk at a slower pace while mowing.
  - Raise the cutting height on your machine.
  - Cut the grass more frequently.
  - Overlap cutting swaths instead of cutting a full swath with each pass.
  - Set the cutting height on the front wheels one notch lower than the rear wheels. For example, set the front wheels at 54 mm (2-1/8 inches) and the rear wheels at 64 mm (2-1/2 inches).

Cutting Leaves

- After cutting the lawn, ensure that half of the lawn shows through the cut leaf cover. You may need to make more than a single pass over the leaves.

- If there are more than 5 inches (13 cm) of leaves on the lawn, set the front cutting height one or two notches higher than the rear cutting height.
- Slow down your mowing speed if the mower does not cut the leaves finely enough.

Maintenance

Note: Determine the left and right sides of the machine from the normal operating position.

Recommended Maintenance Schedule(s)

Maintenance Service Interval	Maintenance Procedure
After the first 5 hours	• Change the engine oil.
Before each use or daily	• Check the engine-oil level. • Ensure that the engine stops within 3 seconds after releasing the blade control bar. • Check the blade-brake clutch operation. • Clean grass clippings and dirt from under the machine.
Every 25 hours	• Clean the blade-brake-clutch shield.
Before storage	• Empty the fuel tank before repairs as directed and before annual storage.
Yearly	• Replace the air filter; replace it more frequently in dusty operating conditions. • Change the engine oil. • Replace the blade or have it sharpened (more frequently if the edge dulls quickly). • Clean the air cooling system; clean it more frequently in dusty operating conditions. Refer to your engine owner's manual. • Refer to your engine operator's manual for any additional yearly maintenance procedures.

Important: **Refer to your engine owner's manual for additional maintenance procedures.**

Preparing for Maintenance

1. Stop the engine and wait for all moving parts to stop.
2. Disconnect the spark-plug wire from the spark plug (Figure 26) before performing any maintenance procedure.

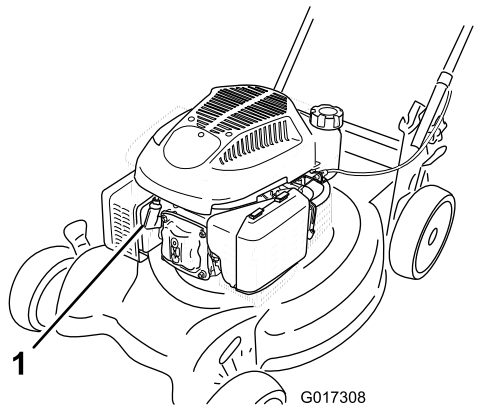

Figure 26

1. Spark-plug wire

3. After performing the maintenance procedure(s), connect the spark-plug wire to the spark plug.

⚠ WARNING

Tipping the machine may cause the fuel to leak. Gasoline is flammable and explosive and can cause personal injury.

Run the engine dry or remove the gasoline with a hand pump; never siphon.

Important: **Always tip the machine onto its side with the dipstick down.**

Replacing the Air Cleaner

Service Interval: Yearly

1. Press down on the latch tabs on top of the air cleaner cover (Figure 27).

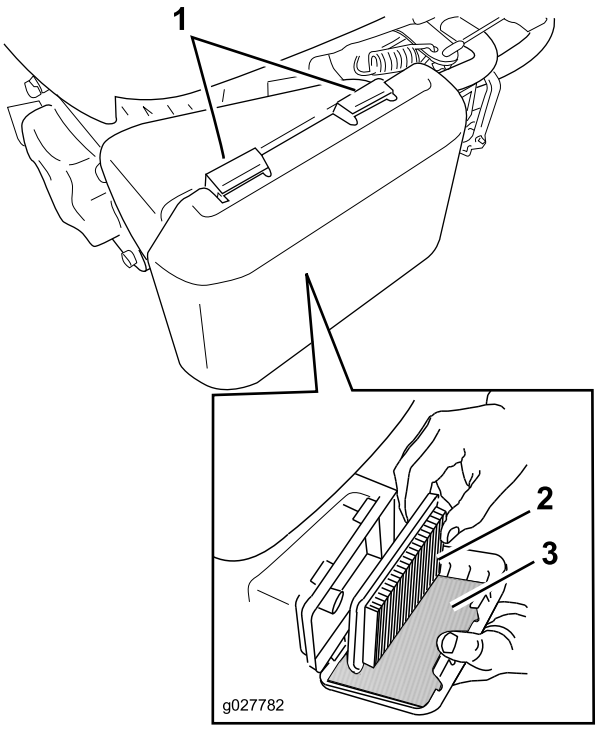

Figure 27

1. Latch tabs
2. Paper air filter
3. Foam pre-filter

2. Open the cover.
3. Remove the paper air filter and the foam pre-filter (Figure 27).
4. Inspect the foam pre-filter, and replace it if it is damaged or excessively dirty.
5. Inspect the paper air filter.
   A. If the paper air filter is damaged or is wet with oil or fuel, replace it.
   B. If the paper air filter is dirty, tap it on a hard surface several times or blow compressed air less than 207 kPa (30 psi) through the side of the filter that faces the engine.

   Note: Do not brush the dirt off the filter; brushing forces dirt into the fibers.
6. Remove dirt from the air cleaner body and cover using a moist rag (to trap the dirt and keep it from falling into the engine). **Do not wipe dirt into the air duct.**
7. Insert the foam pre-filter and the paper air filter into the air cleaner.
8. Install the cover.

Changing the Engine Oil

Service Interval: After the first 5 hours

Yearly

1. Move the machine to a level surface.
2. Run the engine a few minutes before changing the oil to warm it.

   Note: Warm oil flows better and carries more contaminants.
3. Disconnect the wire from the spark plug. Refer to Preparing for Maintenance (page 16).
4. Remove the dipstick (Figure 28).

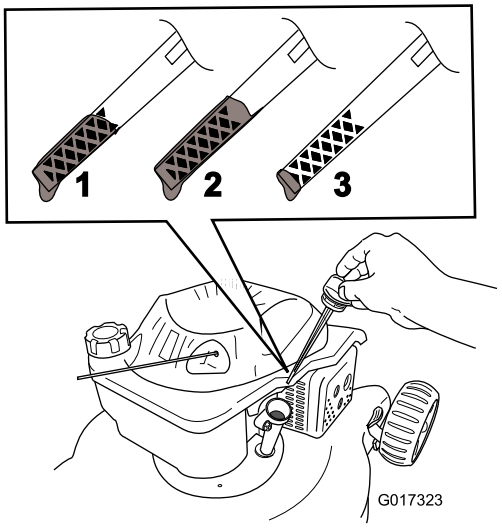

Figure 28

1. The oil level is at its maximum.
2. The oil level is too high—remove oil from the crankcase.
3. The oil level is too low—add oil to the crankcase.

5. Tip the machine onto its side, with the dipstick down, to drain the used oil out through the oil fill tube (Figure 29).

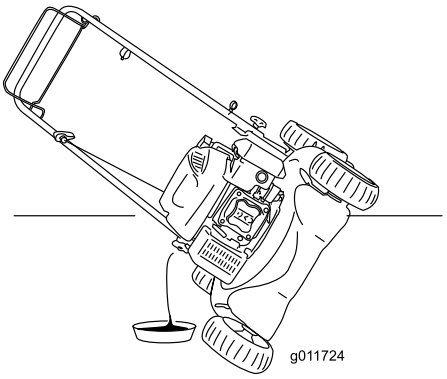

Figure 29

6. After draining out the used oil, return the machine to the operating position.
7. Pour about 3/4 of the crankcase capacity of oil in the crankcase.

   Note: Max. fill: 0.59 L (20 oz), type: SAE 30 or SAE 10W-30 detergent oil with an API service classification of SF, SG, SH, SJ, SL, or higher.
8. Wait about 3 minutes for the oil to settle in the crankcase.
9. Wipe the dipstick clean with a clean cloth.
10. Insert the dipstick into the oil-fill tube **but do not screw it in**, then remove the dipstick.
11. Read the oil level on the dipstick (Figure 28).
    - If the oil level on the dipstick is too low, slowly pour a small amount of oil into the oil-fill tube, wait 3 minutes, and repeat steps 9 through 11 until the oil level on the dipstick is at the correct level.
    - If the oil level on the dipstick is too high, drain the excess oil until the oil level on the dipstick is at the correct level.

    Important: If the oil level in the crankcase is too low or too high and you run the engine, you may damage the engine.
12. Install the dipstick securely.
13. Recycle the used oil properly.

Adjusting the Self-Propel Drive

Whenever you install a new self-propel cable or if the self-propel drive is out of adjustment, adjust the self-propel drive.

1. Turn the adjustment knob counterclockwise to loosen the cable adjustment (Figure 30).

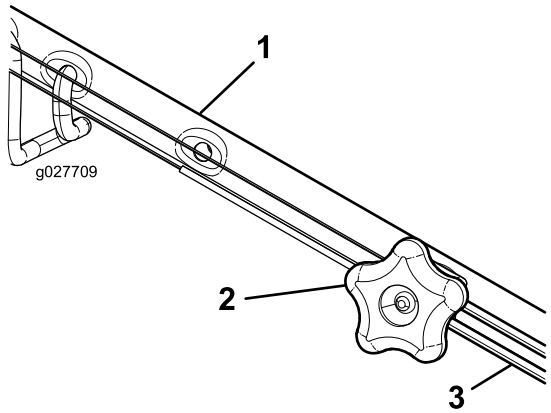

Figure 30

1. Handle (left side)
2. Adjustment knob
3. Self-propel-drive cable

2. Adjust the tension on the cable (Figure 30) by pulling it back or pushing it forward and holding that position.

   Note: Push the cable toward the engine to increase the traction; pull the cable away from the engine to decrease the traction.
3. Turn the adjustment knob clockwise to tighten the cable adjustment.

   Note: Tighten the knob firmly by hand.

Replacing the Blade

Service Interval: Yearly—Replace the blade or have it sharpened (more frequently if the edge dulls quickly).

Important: *You will need a torque wrench to install the blade properly.* If you do not have a torque wrench or are uncomfortable performing this procedure, contact an Authorized Service Dealer.

Examine the blade whenever you run out of gasoline. If the blade is damaged or cracked, replace it immediately. If the blade edge is dull or nicked, have it sharpened and balanced, or replace it.

⚠ WARNING

The blade is sharp; contacting the blade can result in serious personal injury.

Wear gloves when servicing the blade.

1. Disconnect the spark plug wire from the spark plug. Refer to Preparing for Maintenance (page 16).
2. Tip the machine onto its side with the air filter up.
3. Remove the 2 blade nuts and the stiffener (Figure 31).

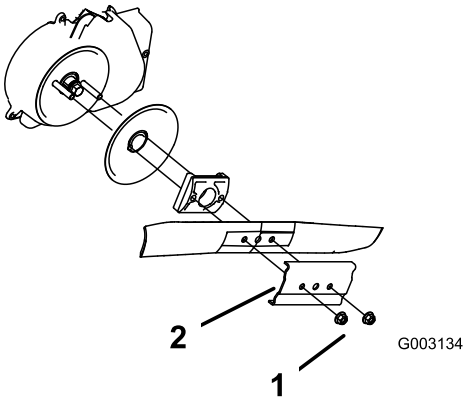

Figure 31

1. Blade nuts
2. Stiffener

4. Remove the blade (Figure 31).
5. Install the new blade (Figure 31).
6. Install the stiffener you previously removed.
7. **Install the blade nuts and torque them to 20 to 37 N-m (15 to 27 ft-lb).**

Cleaning the Blade-Brake-Clutch Shield

Service Interval: Every 25 hours

Clean the blade-brake-clutch shield yearly to prevent the blade from stalling while you mow.

1. Disconnect the spark plug wire from the spark plug. Refer to Preparing for Maintenance (page 16).
2. Tip the machine onto its side with the air filter up.
3. Remove the 2 blade nuts and the stiffener (Figure 32).

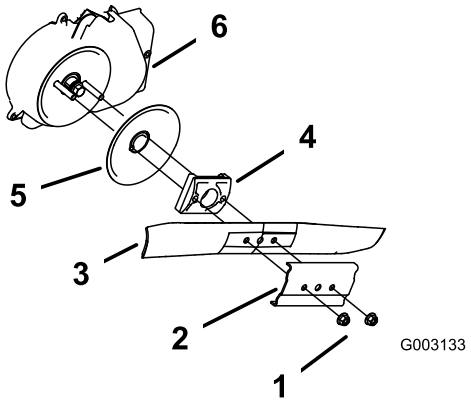

Figure 32

1. Blade nuts
2. Stiffener
3. Blade
4. Blade driver
5. Disk
6. Blade-brake-clutch shield

4. Remove the blade (Figure 32).
5. Remove the blade driver and disk (Figure 32).
6. Remove the blade-brake-clutch shield (Figure 32).
7. Brush or blow out debris from the inside of the shield and around all the parts.
8. Install the blade-brake-clutch shield that you previously removed.
9. Install the blade driver and disk that you previously removed.
10. Install the blade and the stiffener that you previously removed (Figure 32).
11. **Install the blade nuts and torque them to 20 to 37 N-m (15 to 27 ft-lb).**

Cleaning the Machine

Service Interval: Before each use or daily

⚠ WARNING

The machine may dislodge material from under the machine.

- **Wear eye protection.**
- **Stay in the operating position (behind the handle) when the engine is running.**
- **Do not allow bystanders in the area.**

For best results, clean the machine soon after you have completed mowing.

1. Lower the machine to its lowest cutting-height setting. Refer to Adjusting the Cutting Height (page 10).
2. Move the machine onto a flat paved surface.
3. Wash out the area under the rear deflector where the clippings go from the housing to the grass bag.

   Note: Wash out the area with the bag-on-demand in both the fully forward and fully rearward positions.
4. Attach a garden hose that is connected to a water supply to the washout port on the machine (Figure 33).

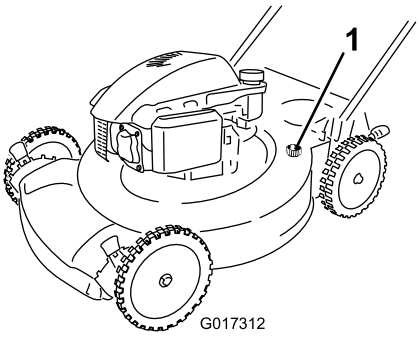

Figure 33

1. Washout port

5. Turn the water on.
6. Start the engine and run it until there are no more clippings that come out from under the machine.
7. Stop the engine.
8. Shut off the water and disconnect the garden hose from the machine.
9. Start the engine and run it for a few minutes to dry the underside of the machine to prevent it from rusting.
10. Allow the engine to cool before storing the machine in an enclosed area.

Storage

Store the machine in a cool, clean, dry place.

Preparing the Machine for Storage

⚠ WARNING

Gasoline vapors can explode.

- **Do not store gasoline more than 30 days.**
- **Do not store the machine in an enclosure near an open flame.**
- **Allow the engine to cool before storing it.**

1. On the last refueling of the year, add fuel stabilizer to the fuel as directed on the stabilizer labeling.
2. Dispose of any unused fuel properly. Recycle it according to local codes, or use it in your automobile.

   Note: Old fuel in the fuel tank is the leading cause of hard starting. Do not store fuel without stabilizer more than 30 days, and do not store stabilized fuel more than 90 days.
3. Run the machine until the engine stops from running out of fuel.
4. Start the engine again.
5. Allow the engine to run until it stops. When you can no longer start the engine, it is sufficiently dry.
6. Disconnect the wire from the spark plug.
7. Remove the spark plug, add 30 ml (1 oz) of oil through the spark plug hole, and pull the starter rope slowly several times to distribute oil throughout the cylinder to prevent cylinder corrosion during the off-season.
8. Install the spark plug and tighten it with a torque wrench to 20 N-m (15 ft-lb).
9. Tighten all nuts, bolts, and screws.

Folding the Handle

⚠ WARNING

Folding or unfolding the handle improperly can damage the cables, causing an unsafe operating condition.

- **Do not damage the cables when folding or unfolding the handle.**
- **If a cable is damaged, contact an Authorized Service Dealer.**

1. Remove the ignition key (electric-start model only).
2. Loosen the handle knobs until you can move the upper handle freely.
3. Fold the upper handle forward as shown in Figure 34.

   Important: Route the cables to the outside of the handle knobs as you fold the handle.

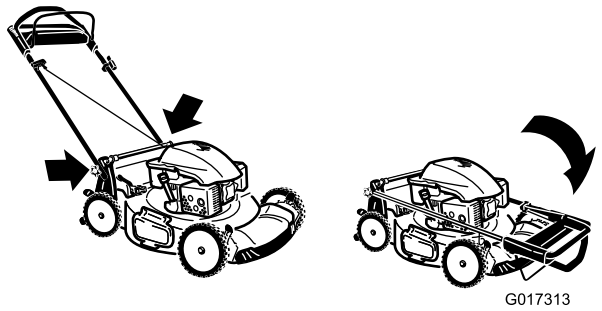

Figure 34

4. To unfold the handle, reverse the steps above.

Remove the Machine from Storage

1. Check and tighten all fasteners.
2. Remove the spark plug and spin the engine rapidly by pulling the recoil-start handle to blow the excess oil from the cylinder.
3. Install the spark plug and tighten it with a torque wrench to 20 N-m (15 ft-lb).
4. Perform any maintenance procedures; refer to Maintenance (page 16).
5. Check the engine-oil level; refer to Checking the Engine-Oil Level (page 10).
6. Fill the fuel tank with fresh gasoline; refer to Filling the Fuel Tank (page 9).
7. Connect the wire to the spark plug.

Notes:

Notes:

Notes:

The Toro Total Coverage Guarantee

A 2-Year Full Warranty (45 Day Limited Warranty for Commercial Use)

The Toro GTS Starting Guarantee

A 3-Year Full Warranty (Not Applicable for Commercial Use)

22 in Recycler®
20 in Mulcher/Bagger
Walk Power Mowers

Conditions and Products Covered

The Toro Company and its affiliate, Toro Warranty Company, pursuant to an agreement between them, jointly promise to repair the Toro Product listed below if used for residential purposes*; if it is defective in materials or workmanship or if it stops functioning due to the failure of a component; or if the Toro GTS (Guaranteed to Start) engine will not start on the first or second pull, provided the routine maintenance required in the *Operator's Manual* have been performed.

This warranty covers the cost of parts and labor, but you must pay transportation costs.

The following time periods apply from the date of purchase:

Products	Warranty Period
22 in Recycler and 20 in Mulcher/Bagger and Attachments	2 - year full warranty
GTS (Guaranteed to Start)	3 - year full warranty
Engine	3 - year full warranty
Battery	1 - year full warranty

Limited Warranty for Commercial Use*

Gas-powered Toro Products used for commercial, institutional, or rental use, are warranted for 45 days against defects in materials or workmanship. Components failing due to normal wear are not covered by this warranty.

The Toro GTS (Guaranteed to Start) Starting Guarantee does not apply when the product is used commercially*.

Instructions for Obtaining Warranty Service

If you think that your Toro Product contains a defect in materials or workmanship, or if a normal, able-bodied adult can no longer start your product's engine in one or two pulls, follow this procedure:

1. Contact any Authorized Toro Service Dealer to arrange service at their dealership. To locate a dealer convenient to you, refer to the *Yellow Pages* of your telephone directory (look under “Lawn Mowers”) or access our web site at www.Toro.com. You may also call the numbers listed in item #3 to use the 24-hour Toro Dealer locator system.
2. Bring the product and your proof of purchase (sales receipt) to the Service Dealer. The dealer will diagnose the problem and determine if it is covered under warranty.
3. If for any reason you are dissatisfied with the Service Dealer’s analysis or with the assistance provided, contact us at:

   Customer Care Department, RLC Division
   The Toro Company
   8111 Lyndale Avenue South
   Bloomington, MN 55420-1196
   Toll free at 866-214-9807 (U.S. customers)
   Toll free at 866-214-9808 (Canadian customers)

Owner Responsibilities

You must maintain your Toro Product by following the maintenance procedures described in the *Operator's Manual*. Such routine maintenance, whether performed by a dealer or by you, is at your expense.

Items and Conditions Not Covered

There is no other express warranty except for special emission system coverage and engine warranty coverage on some products. This express warranty does not cover the following:

- Cost of regular maintenance service or parts, such as filters, fuel, lubricants, oil changes, spark plugs, air filters blade sharpening or worn blades, cable/linkage adjustments, or brake and clutch adjustments
- Components failing due to normal wear
- Any product or part which has been altered or misused or neglected and requires replacement or repair due to accidents or lack of proper maintenance
- Pickup and delivery charges
- Repairs or attempted repairs by anyone other than an Authorized Toro Service Dealer
- Repairs necessary due to failure to follow recommended fuel procedure (consult *Operator's Manual* for more details)
  - Removing contaminants from the fuel system is not covered
  - Use of old fuel (more than one month old) or fuel which contains more than 10% ethanol or more that 15% MTBE
  - Failure to drain the fuel system prior to any period of non-use over one month
- Repairs or adjustments to correct starting difficulties due to the following:
  - Failure to follow proper maintenance procedures or recommended fuel procedure
  - Rotary mower blade striking an object
- Special operational conditions where starting may require more than two pulls:
  - First time starts after extended period of non-use over three months or seasonal storage
  - Cool temperature starts such as those found in early spring and late autumn
  - Improper starting procedures - if you are having difficulty starting your unit, please check the *Operator's Manual* to ensure that you are using the correct starting procedures. This can save an unnecessary visit to an Authorized Toro Service Dealer.

General Conditions

All repairs covered by these warranties must be performed by an Authorized Toro Service Dealer using Toro-approved replacement parts. Repair by an Authorized Toro Service Dealer is your sole remedy under this warranty.

Neither The Toro Company nor Toro Warranty Company is liable for indirect, incidental, or consequential damages in connection with the use of the Toro Products covered by these warranties, including any cost or expense of providing substitute equipment or service during reasonable periods of malfunction or non-use pending completion of repairs under these warranties.

Some states do not allow exclusions of incidental or consequential damages, so the above exclusions may not apply to you.

This warranty gives you specific legal rights, and you may also have other rights which vary from state to state.

Countries Other than the United States or Canada

Customers who have purchased Toro products exported from the United States or Canada should contact their Toro Distributor (Dealer) to obtain guarantee policies for your country, province, or state. If for any reason you are dissatisfied with your Distributor's service or have difficulty obtaining guarantee information, contact the Toro importer. If all other remedies fail, you may contact us at Toro Warranty Company.

Australian Consumer Law: Australian customers will find details relating to the Australian Consumer Law either inside the box or at your local Toro Dealer.

*Residential purposes means use of the product on the same lot as your home. Use at more than one location, or institutional or rental use, is considered commercial use, and the commercial use warranty would apply.