Form No. 3388-675 Rev A

TimeMaster 30in Lawn Mower

Model No. 20199—Serial No. 315000001 and Up

Model No. 20200—Serial No. 315000001 and Up

Operator's Manual

Introduction

This rotary-blade, walk-behind lawn mower is intended to be used by residential homeowners. It is designed primarily for cutting grass on well-maintained lawns on residential properties. It is not designed for cutting brush or for agricultural uses.

Read this information carefully to learn how to operate and maintain your product properly and to avoid injury and product damage. You are responsible for operating the product properly and safely.

You may contact Toro directly at www.Toro.com for product and accessory information, help finding a dealer, or to register your product.

Whenever you need service, genuine Toro parts, or additional information, contact an Authorized Service Dealer or Toro Customer Service and have the model and serial numbers of your product ready. Figure 1 identifies the location of the model and serial numbers on the product.

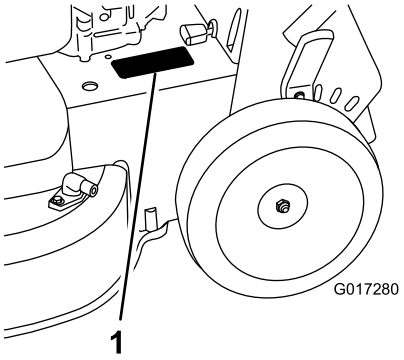

Figure 1

1. Model and serial number plate

Write the product model and serial numbers in the space below:

Model No. _____

Serial No. _____

This manual identifies potential hazards and has safety messages identified by the safety alert symbol (Figure 2), which signals a hazard that may cause serious injury or death if you do not follow the recommended precautions.



Figure 2

1. Safety alert symbol

This manual uses 2 words to highlight information. **Important** calls attention to special mechanical information and **Note** emphasizes general information worthy of special attention.

WARNING

CALIFORNIA
Proposition 65 Warning

This product contains a chemical or chemicals known to the State of California to cause cancer, birth defects, or other reproductive harm.

The engine exhaust from this product contains chemicals known to the State of California to cause cancer, birth defects, or other reproductive harm.

Important: This engine is not equipped with a spark arrester muffler. It is a violation of California Public Resource Code Section 4442 to use or operate the engine on any forest-covered, brush-covered, or grass-covered land. Other states or federal areas may have similar laws.

This spark ignition system complies with Canadian ICES-002.

The enclosed *Engine Owner's Manual* is supplied for information regarding the US Environmental Protection Agency (EPA) and the California Emission Control Regulation of emission systems, maintenance, and warranty. Replacements may be ordered through the engine manufacturer.

Net Torque: The gross or net torque of this engine was laboratory rated by the engine manufacturer in accordance with the Society of Automotive Engineers (SAE) J1940. As configured to meet safety, emission, and operating requirements, the actual engine torque on this class of mower will be significantly lower. Go to www.Toro.com to view specifications on your mower model.

© 2014—The Toro® Company
8111 Lyndale Avenue South
Bloomington, MN 55420

Register at www.Toro.com.

Original Instructions (EN)
Printed in the USA
All Rights Reserved

3388-675 A

Contents

Introduction 1
Safety 2
General Operation 2
Slope Operation 3
Children 3
Service 3
Safety and Instructional Decals 4
Setup 5
1 Assembling the Handle 5
2 Installing the Blade-Control Bar 6
3 Filling the Engine with Oil 6
4 Charging the Battery 7
5 Assembling the Grass Bag 7
Product Overview 8
Operation 9
Filling the Fuel Tank 9
Checking the Engine-Oil Level 9
Adjusting the Cutting Height 10
Adjusting the Handle Height 11
Starting the Engine 11
Using the Self-Propel Drive 11
Stopping the Engine 12
Engaging the Blade 12
Disengaging the Blade 12
Checking the Blade-Stop System Operation 13
Recycling the Clippings 13
Bagging the Clippings 13
Side-Discharging the Clippings 14
Operating Tips 15
Maintenance 16
Recommended Maintenance Schedule(s) 16
Preparing for Maintenance 16
Servicing the Air Filter 17
Changing the Engine Oil 17
Charging the Battery 18
Replacing the Fuse 18
Replacing the Battery 18
Adjusting the Self-Propel Drive 19
Servicing the Blade-Drive System 20
Servicing the Cutting Blades 20
Checking for Bent Blades 21
Removing the Blades 22
Installing the Blades 22
Cleaning under the Machine 23
Storage 24
General Information 24
Preparing the Fuel System 24
Preparing the Engine 24
Removing the Machine from Storage 24

Safety

This lawn mower meets or exceeds the CPSC blade safety requirements for walk-behind rotary lawn mowers and the B71.1 specifications of the American National Standards Institute in effect at the time of production.

Read and understand the contents of this manual before you start the engine.

The safety alert symbol (Figure 2) is used to alert you to potential personal injury hazards. Obey all safety messages that follow this symbol to avoid possible injury or death. Improperly using or maintaining this mower could result in injury or death. To reduce this potential, comply with the following safety instructions.

The following instructions have been adapted from the ANSI/OPEI standard B71.1-2012.

This cutting machine can amputate hands and feet and throw objects. Failure to observe the following safety instructions could result in serious injury or death.

General Operation

- Read, understand, and follow all instructions on the machine and in the manual(s) before starting the engine.
- Do not put hands or feet near or under the machine. Keep clear of the discharge opening at all times.
- Only allow responsible adults who are familiar with the instructions to operate this machine.
- Clear the area of objects such as rocks, wire, toys, etc., which could be thrown by the blade. Stay behind the handle when the engine is running.
- Be sure the area is clear of bystanders before operating. Stop machine if anyone enters the area.
- Do not operate the machine barefooted or while wearing sandals. Always wear substantial footwear.
- Do not pull the machine backward unless it is absolutely necessary. Always look down and behind before and while moving backward with the machine.
- Never direct discharged material toward anyone. Avoid discharging material against a wall or obstruction. Material may ricochet back toward you or bystanders. Stop the blade when crossing gravel surfaces.
- Do not operate the machine without the entire grass catcher, discharge guard, rear guard, or other safety protective devices in place and working.
- Never leave a running machine unattended.
- Stop the engine and wait until the blade comes to a complete stop before cleaning the machine, removing grass catcher, or unclogging the discharge guard.
- Operate the machine only in daylight or good artificial light.
- Do not operate the machine while under the influence of alcohol or drugs.

- Never operate the machine in wet grass. Always be sure of your footing; walk; never run.
- Disengage the drive system, if so equipped, before starting the engine.
- If the machine should start to vibrate abnormally, stop the engine and check for the cause immediately. Vibration is generally a warning of trouble.
- Always wear eye protection when operating the machine.
- See the manufacturer's instructions for proper operation and installation of accessories. Use only accessories approved by the manufacturer.

Slope Operation

Slopes are a major factor related to slip and fall accidents, which can result in severe injury. Operation on all slopes requires extra caution. If you feel uneasy on a slope, do not mow it.

- Mow across the face of slopes; never up and down. Exercise extreme caution when changing direction on slopes.
- Watch for holes, ruts, bumps, rocks, or other hidden objects. Uneven terrain could cause a slip-and-fall accident. Tall grass can hide obstacles.
- Do not mow on wet grass or excessively steep slopes. Poor footing could cause a slip-and-fall accident.
- Do not mow near drop-offs, ditches, or embankments. You could lose your footing or balance.

Children

Tragic accidents can occur if the operator is not alert to the presence of children. Children are often attracted to the machine and the mowing activity. **Never** assume that children will remain where you last saw them.

- Keep children out of the mowing area and under the watchful care of a responsible adult other than the operator.
- Be alert and turn the machine off if a child enters the area.
- Never allow children to operate the machine.
- Use extra care when approaching blind corners, shrubs, trees, or other objects that may block your view of a child.

Service

Safe Handling of Gasoline

To avoid personal injury or property damage, use extreme care in handling gasoline. Gasoline is extremely flammable and the vapors are explosive.

- Extinguish all cigarettes, cigars, pipes, and other sources of ignition.
- Use only an approved gasoline container.
- Never remove the fuel cap or add fuel with the engine running. Allow the engine to cool before refueling.
- Never refuel the machine indoors.
- Never store the machine or fuel container where there is an open flame, spark, or pilot light, such as on a water heater or on other appliances.
- Never fill containers inside a vehicle or on a truck or trailer bed with a plastic liner. Always place containers on the ground, away from your vehicle before filling.
- Remove gas-powered equipment from the truck or trailer and refuel it on the ground. If this is not possible, then refuel such equipment with a portable container rather than from a gasoline dispenser nozzle.
- Keep the nozzle in contact with the rim of the fuel tank or container opening at all times until fueling is complete. Do not use a nozzle lock-open device.
- If fuel is spilled on clothing, change clothing immediately.
- Never overfill the fuel tank. Replace the fuel cap and tighten it securely.

⚠ WARNING

Exhaust contains carbon monoxide, an odorless, deadly poison that can kill you.

Do not run the engine indoors or in an enclosed area.

General Service

- Never operate the machine in a closed area.
- Keep all nuts and bolts tight to be sure that the equipment is in safe working condition.
- Never tamper with safety devices. Check their proper operation regularly.
- Keep machine free of grass, leaves, or other debris build-up. Clean up oil or fuel spillage and remove any fuel-soaked debris. Allow the machine to cool before storing it.
- If you strike a foreign object, stop and inspect the machine. Repair the machine, if necessary, before starting it.
- Never make any adjustments or repairs with the engine running. Disconnect the spark-plug wire and ground against the engine to prevent it from unintentionally starting.
- Check the grass catcher components and the discharge guard frequently and replace them with the manufacturer's recommended parts when necessary.
- Mower blades are sharp. Wrap the blade or wear gloves, and use extra caution when servicing them.
- Do not change the engine governor setting or overspeed the engine.

- Maintain or replace safety and instruction labels as necessary.
- To best protect your investment and maintain optimal performance of your Toro equipment, count on Toro genuine parts. When it comes to reliability, Toro delivers replacement parts designed to the exact engineering specifications of our equipment. For peace of mind, insist on Toro genuine parts.

Safety and Instructional Decals

Important: **Safety and instruction decals are located near areas of potential danger. Replace damaged decals.**

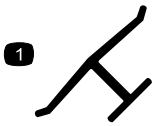

Manufacturer's Mark

1. Indicates the blade is identified as a part from the original machine manufacturer.



94-8072

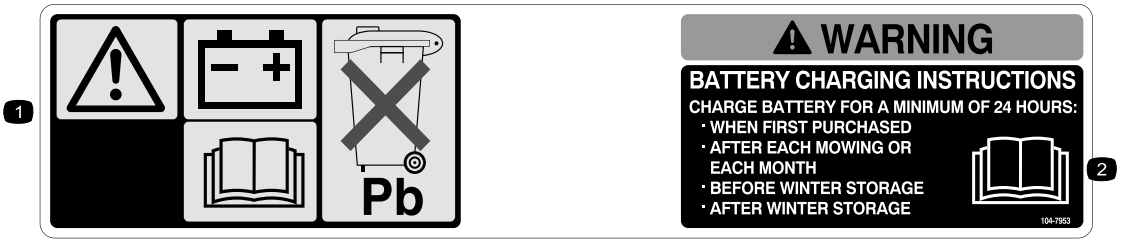

104-7953

Electric-start model only

1. Warning—read the *Operator's Manual* for information on charging the battery; contains lead; do not discard.
2. Read the *Operator's Manual.*

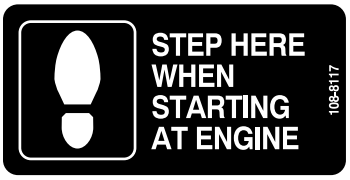

108-8117



117-2718

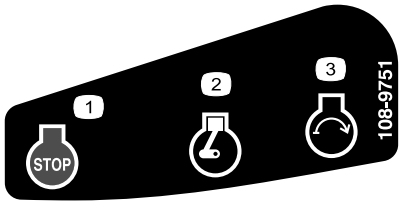

108-9751

Electric-start model only

1. Engine—stop
2. Engine—run
3. Engine—start

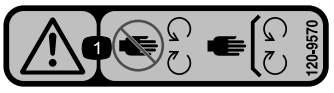

120-9570

1. Warning—stay away from moving parts, keep all guards and shields in place.

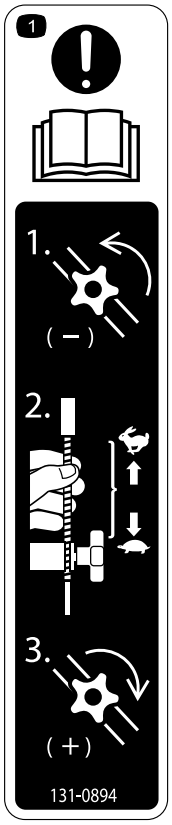

131-0894

Traction Adjustment

1. Attention; read the *Operator's Manual*—1) Loosen the knob by turning it counter clockwise; 2) Pull the cable(s) away from the engine to decrease the traction, or push the cable(s) toward the engine to increase the traction; 3) Tighten the knob by turning it clockwise.

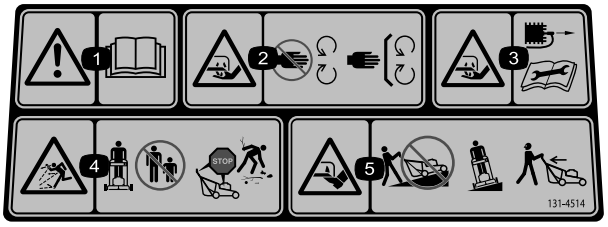

131–4514

1. Warning—read the *Operator's Manual*.
2. Cutting/dismemberment hazard of hand or foot, mower blade—stay away from moving parts; keep all guards and shields in place.
3. Cutting/dismemberment hazard of hand or foot, mower blade—disconnect the spark-plug wire and read the instructions before servicing or performing maintenance.
4. Thrown object hazard—keep bystanders a safe distance from the machine; stop the engine before leaving the operating position; pick up any debris before mowing.
5. Cutting/dismemberment hazard of hand or foot, mower blade—do not operate up and down slopes; operate side to side on slopes; look behind you when backing up.

Setup

Important: **Remove and discard the protective plastic sheet that covers the engine.**

1

Assembling the Handle

No Parts Required

Procedure

⚠ WARNING

Assembling and unfolding the handle improperly can damage the cables, causing an unsafe operating condition.

- **Do not damage the cables when unfolding the handle.**
- **If a cable is damaged, contact an Authorized Service Dealer.**

1. Rotate the upper handle so that it nests together with the lower handle (Figure 3), and tighten both knobs on the handle to lock the upper handle in place (Figure 4).

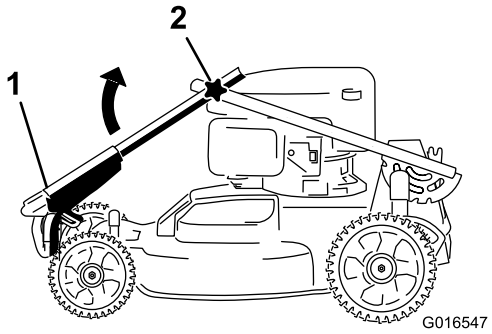

Figure 3

1. Upper handle
2. Knob (2)

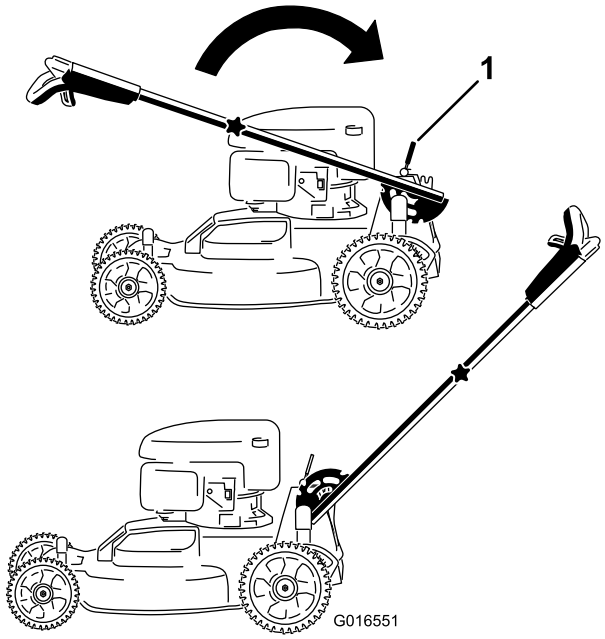

Figure 4

1. Handle-lock lever

2. Release the handle-lock lever (Figure 4).
3. Pull the handle rearward and lock it into position (Figure 4).

2

Installing the Blade-Control Bar

No Parts Required

Procedure

Install the blade-control bar into the upper handle (Figure 5).

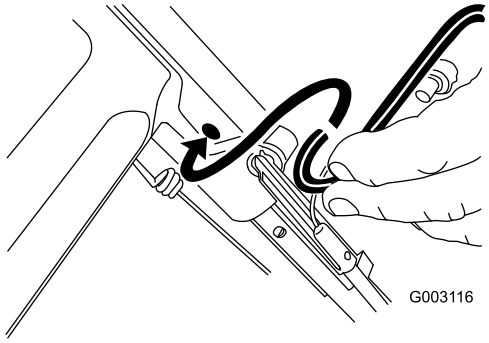

Figure 5

3

Filling the Engine with Oil

No Parts Required

Procedure

Important: Your machine *does not* come with oil in the engine. Before starting the engine, fill the engine with oil.

Max. fill: 0.59 L (20 oz), type: SAE 30 detergent oil with an API service classification of SF, SG, SH, SJ, SL, or higher.

Note: When the crankcase is empty, pour about 3/4 of the crankcase capacity of oil in the crankcase, then do the following:

1. Move the machine to a level surface.
2. Remove the dipstick by rotating the cap counterclockwise and pulling it out (Figure 6).

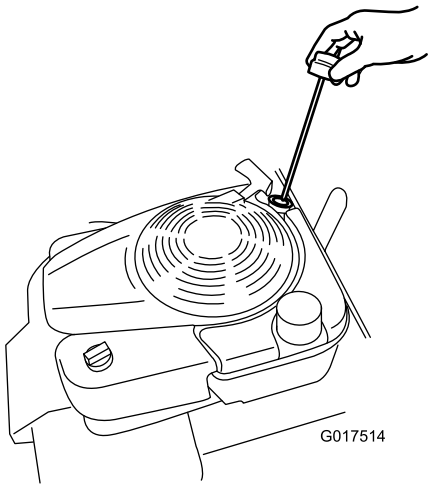

Figure 6

3. Wipe the dipstick clean with a clean cloth.
4. Insert the dipstick fully into the oil-fill tube, then remove the dipstick.
5. Read the oil level on the dipstick (Figure 6).

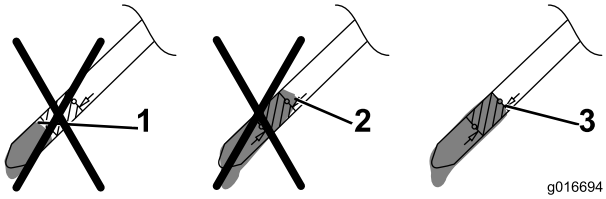

Figure 7

1. The oil level is too low; add oil to the crankcase.
2. The oil level is too high; remove oil from the crankcase.
3. The oil level is correct.

- If the oil level is too low, **slowly** pour a small amount of oil into the oil-fill tube, wait 3 minutes, and repeat steps 3 through 5 until the oil level on the dipstick is correct as shown in Figure 7.
- If the oil level is too high, drain the excess oil until you obtain the correct oil level on the dipstick. To drain the excess oil, refer to Changing the Engine Oil (page 17).

Important: If the oil level in the crankcase is too low or too high and you run the engine, you may damage the engine.

6. Install the dipstick securely.

Important: *Change the engine oil after the first 5 operating hours*; change it yearly thereafter. Refer to Changing the Engine Oil (page 17).

4

Charging the Battery

No Parts Required

Procedure

Electric-start model only

Refer to Charging the Battery (page 18).

5

Assembling the Grass Bag

No Parts Required

Procedure

1. Slip the grass bag over the frame as shown in Figure 8.

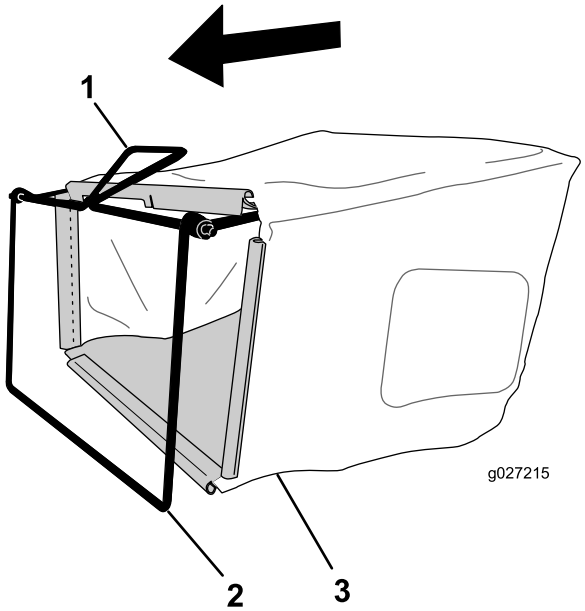

Figure 8

1. Handle
2. Frame
3. Grass bag

Note: Do not slip the bag over the handle (Figure 8).

2. Hook the bottom channel of the bag onto the bottom of the frame (Figure 9).

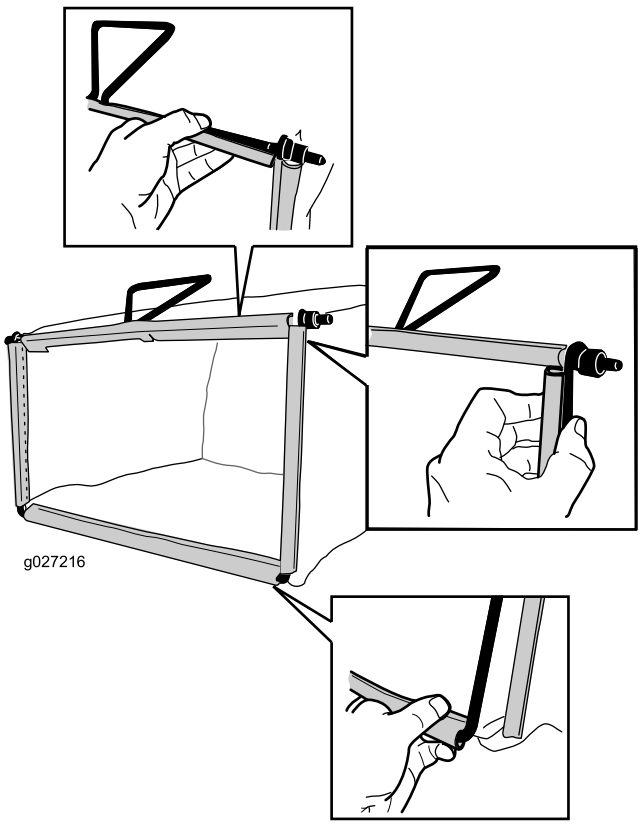

Figure 9

3. Hook the top and side channels of the bag onto the top and sides of the frame, respectively (Figure 9).

Product Overview

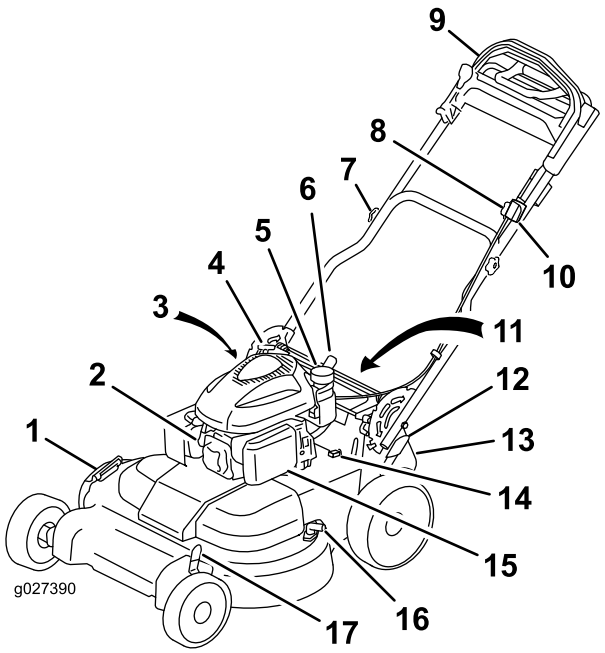

Figure 10

1. Side-discharge deflector
2. Spark plug
3. Oil fill/dipstick (not shown)
4. Recoil-start handle
5. Fuel-tank cap
6. Handle-lock lever
7. Handle knob (2)
8. Adjustment knob for the self-propel drive
9. Upper handle
10. Ignition switch (electric-start model only) or toggle switch (standard model only)
11. Battery (electric-start model only; not shown)
12. Rear cutting-height lever
13. Rear-discharge deflector
14. Fuse
15. Air filter
16. Washout port
17. Front cutting-height lever

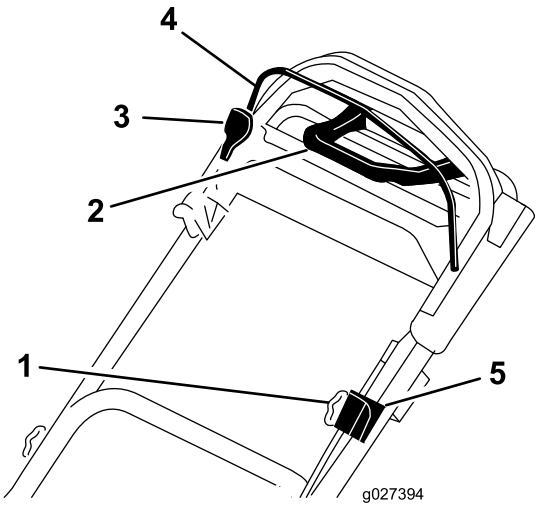

Figure 11

Upper handle

1. Adjustment knob for the self-propel drive
2. Traction-assist handle
3. Blade-control-bar lock
4. Blade-control bar
5. Ignition switch (electric-start model only) or toggle switch (standard model only)

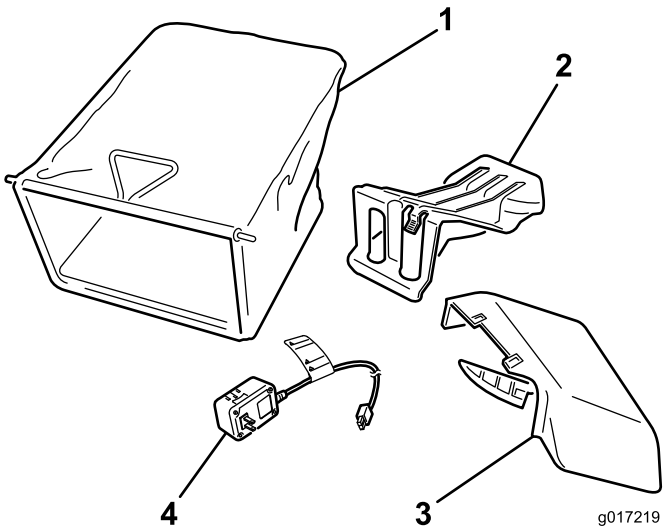

Figure 12

1. Grass bag
2. Rear-discharge plug (installed)
3. Side-discharge chute
4. Battery charger (electric-start model only)

Operation

Filling the Fuel Tank

⚠ DANGER

Gasoline is extremely flammable and explosive. A fire or explosion from gasoline can burn you and others.

- **To prevent a static charge from igniting the gasoline, place the container and/or machine directly on the ground before filling, not in a vehicle or on an object.**
- **Fill the tank outdoors when the engine is cold. Wipe up spills.**
- **Do not handle gasoline when smoking or around an open flame or sparks.**
- **Store gasoline in an approved fuel container, out of the reach of children.**

- For best results, use only clean, fresh, unleaded gasoline with an octane rating of 87 or higher ((R+M)/2 rating method).
- Oxygenated fuel with up to 10% ethanol or 15% MTBE by volume is acceptable.
- **Do not** use ethanol blends of gasoline, such as E15 or E85, with more than 10% ethanol by volume. Performance problems and/or engine damage may result, which may not be covered under warranty.
- **Do not** use gasoline containing methanol.
- **Do not** store fuel either in the fuel tank or in fuel containers over the winter unless fuel stabilizer has been added to the fuel.
- **Do not** add oil to gasoline.

Important: To reduce starting problems, add fuel stabilizer to the fuel all season, mixing it with gasoline less than 30 days old.

1. Clean around the fuel-tank cap, and remove the cap from the tank (Figure 13).

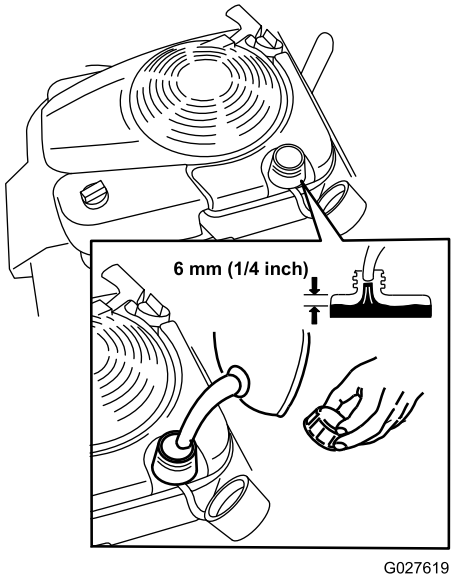

Figure 13

2. Fill the fuel tank, leaving at least 6 mm (1/4 inch) from the bottom of the neck empty to allow the gasoline room to expand (Figure 13).
3. Install the fuel-tank cap and tighten it securely by hand.

Checking the Engine-Oil Level

Service Interval: Before each use or daily

Note: Max. fill: 0.59 L (20 oz), type: SAE 30 detergent oil with an API service classification of SF, SG, SH, SJ, SL, or higher.

1. Move the machine to a level surface.
2. Remove the dipstick (Figure 14).

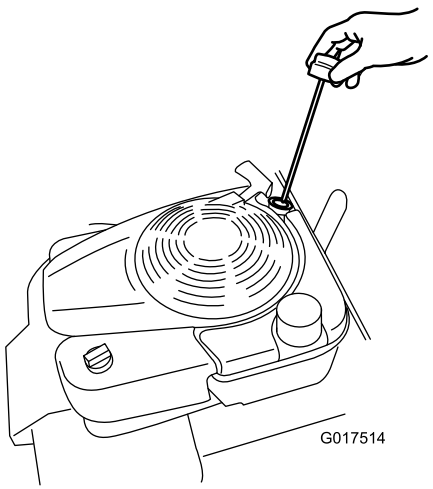

Figure 14

3. Wipe the dipstick clean with a clean cloth.
4. Insert the dipstick fully into the oil-fill tube, then remove the dipstick.
5. Read the oil level on the dipstick (Figure 15).

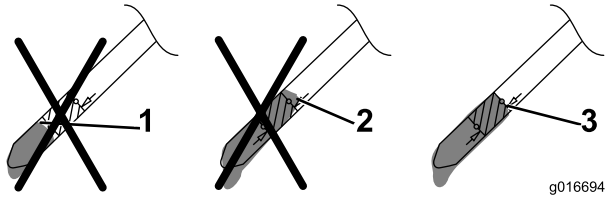

Figure 15

1. The oil level is too low; add oil to the crankcase.
2. The oil level is too high; remove oil from the crankcase.
3. The oil level is correct.

- If the oil level is too low, **slowly** pour a small amount of oil into the oil-fill tube, wait 3 minutes, and repeat steps 3 through 5 until the oil level is correct as shown in Figure 15.
- If the oil level is too high, drain the excess oil until you obtain the correct oil level on the dipstick. To drain the excess oil, refer to Changing the Engine Oil (page 17).

Important: If the oil level in the crankcase is too low or too high and you run the engine, you may damage the engine.

6. Install the dipstick securely.

Adjusting the Cutting Height

⚠ WARNING

Adjusting the cutting height may bring you into contact with the moving blade, causing serious injury.

- **Stop the engine and wait for all moving parts to stop.**
- **Do not put your fingers under the housing when adjusting the cutting height.**

Adjust the cutting height as desired; refer to Figure 14 and Figure 15.

Note: To raise the machine, move the front and rear cutting-height levers forward; to lower the machine, move the cutting-height levers rearward. Set the front and rear wheels to the same height unless special circumstances require otherwise; refer to Operating Tips (page 15).

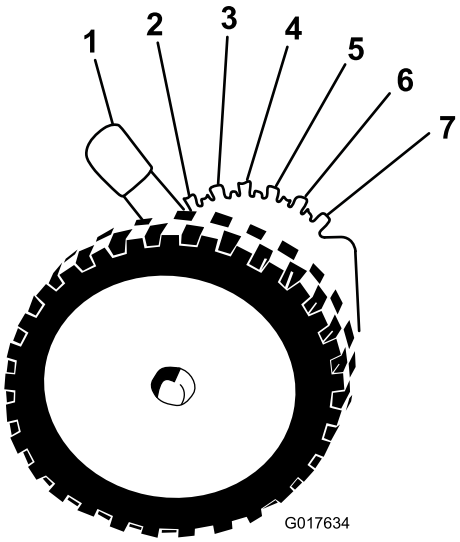

Figure 16

Front cutting-height lever

1. A: 10.8 cm (4-1/4 inches)
2. B: 9.5 cm (3-3/4 inches)
3. C: 8.3 cm (3-1/4 inches)
4. D: 7.0 cm (2-3/4 inches)
5. E: 5.7 cm (2-1/4 inches)
6. F: 4.4 cm (1-3/4 inches)
7. G: 3.2 cm (1-1/4 inches)

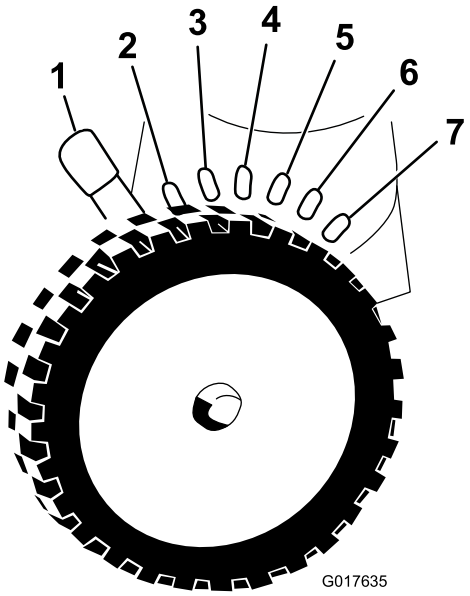

Figure 17

Rear cutting-height lever

1. A: 10.8 cm (4-1/4 inches)
2. B: 9.5 cm (3-3/4 inches)
3. C: 8.3 cm (3-1/4 inches)
4. D: 7.0 cm (2-3/4 inches)
5. E: 5.7 cm (2-1/4 inches)
6. F: 4.4 cm (1-3/4 inches)
7. G: 3.2 cm (1-1/4 inches)

Adjusting the Handle Height

You can raise or lower the handle to a position more comfortable for you.

1. Lift the handle slightly and pull the handle-lock lever rearward to disengage the handle-lock pins (Figure 18).

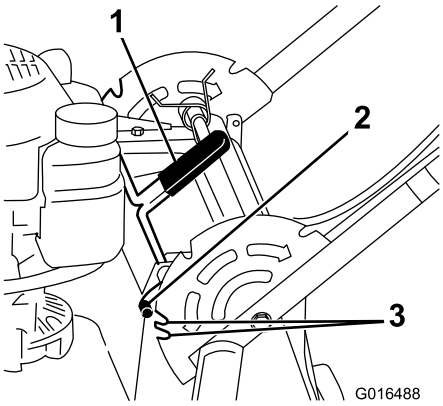

Figure 18

1. Handle-lock lever
2. Handle-lock pin (2)
3. Notches

2. Rotate the handle and align the desired notch in the handle bracket to the handle-lock pins; refer to Figure 18.
3. Release the handle-lock lever to secure the handle in place.

Starting the Engine

Standard Model

Pull the recoil handle slowly until you feel resistance, then pull it sharply. Allow the rope to return to the engine slowly.

Note: If the machine does not start after several attempts, contact an Authorized Service Dealer.

Electric-start Model

You can start the engine on an electric-start model by using either the ignition key or the recoil-start handle.

- **Ignition Key:**

  Turn and hold the ignition key to the Start position (Figure 19); when the engine starts, release the key.

  Important: Do not attempt to start the engine with the blade-control bar engaged; otherwise, you may blow the fuse.

  Note: Do not hold the ignition key in the Start position for longer than 5 seconds to prevent burning out the starter motor.

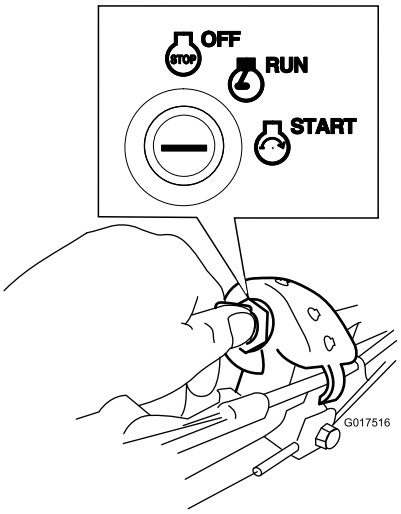

Figure 19

- **Recoil-Start Handle:**
  1. Turn the ignition key to the Run position (Figure 19).
  2. Pull the recoil handle slowly to the rear until you feel resistance, then pull sharply. Allow the rope to return to the engine slowly.

Using the Self-Propel Drive

To operate the self-propel drive, simply walk with your hands on the upper handle and your elbows at your sides, and the machine will automatically keep pace with you (Figure 20).

Note: You can self-propel the machine with the blades engaged or disengaged.

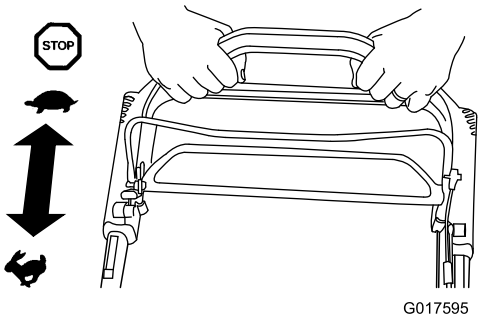

Figure 20

Note: Use the traction-assist handle in situations when you need more control than you have with the self-propel drive alone.

Stopping the Engine

Standard Model

Press the toggle switch (Figure 21) to the Stop position and hold it until the engine stops.

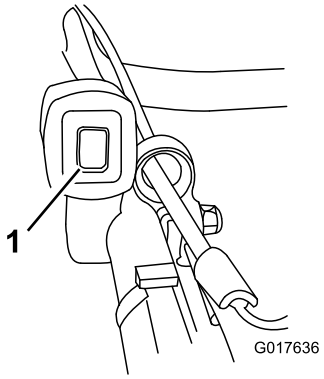

Figure 21

1. Toggle switch

Electric-start Model

1. Turn the key to the Off position (Figure 22).

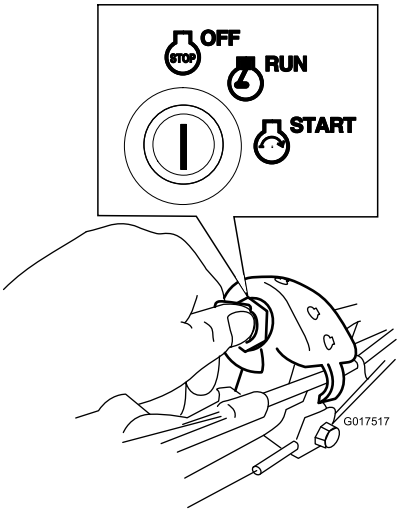

Figure 22

2. When the engine stops, remove the ignition key and take it with you when you leave the machine.

Engaging the Blade

When you start your engine, the blade does not turn. You must engage the blade to mow.

1. Pull the blade-control-bar lock back to the blade-control bar (Figure 23).

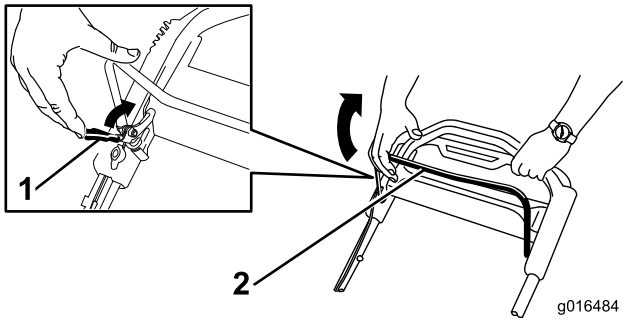

Figure 23

1. Blade-control bar lock 2. Blade-control bar

2. **Slowly** pull the blade-control bar back to the handle (Figure 23).
3. Hold the blade-control bar against the handle (Figure 24).

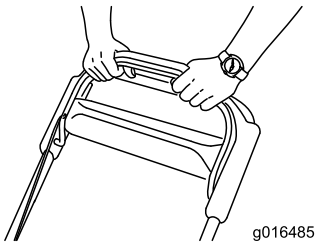

Figure 24

Disengaging the Blade

Release the blade-control bar (Figure 25).

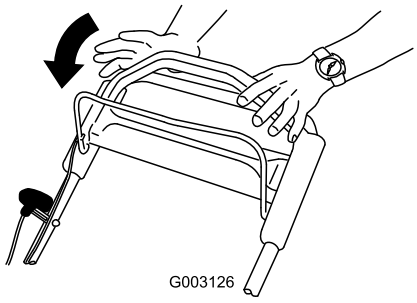

Figure 25

Important: When you release the blade-control bar, the blade should stop within 3 seconds. If it does not stop properly, stop using your machine immediately and contact an Authorized Service Dealer.

Checking the Blade-Stop System Operation

Service Interval: Before each use or daily

Check that the blades stop within 3 seconds of releasing the blade-control bar.

Using the Grass Bag

You can use the grass bag to check the blade-stop system.

1. Remove the rear-discharge plug.
2. Install the empty grass bag on the machine.
3. Start the engine.
4. Engage the blade.

   Note: The bag should begin to inflate, indicating that the blades are rotating.
5. While watching the bag, release the blade-control bar.

   Note: If the bag does not deflate within 3 seconds of releasing the blade-control bar, the blade-stop system may be deteriorating and, if ignored, could result in an unsafe operating condition. Have the machine inspected and serviced by an Authorized Service Dealer.
6. Stop the engine and wait for all moving parts to stop.

Not Using the Grass Bag

1. Move the machine onto a paved surface in a non-windy area.
2. Set all 4 wheels to the 89 mm (3-1/2 inch) cutting height setting.
3. Take a half sheet of newspaper and crumple it into a ball small enough to go under the machine housing (about 76 mm (3 inches) in diameter).
4. Place the newspaper ball about 13 cm (5 inches) in front of the machine.
5. Start the engine.
6. Engage the blade.
7. Release the blade-control bar and begin counting out 3 seconds.
8. On the count of 3, push the machine quickly forward over the newspaper.
9. Stop the engine and wait for all moving parts to stop.
10. Go to the front of the machine and check the newspaper ball.

    Note: If the newspaper ball did not go under the machine, repeat steps 4 through 10.
11. If the newspaper is unravelled or shredded, the blades did not stop properly, which could result in an unsafe operating condition. Contact an Authorized Service Dealer.

Recycling the Clippings

This machine comes from the factory ready to recycle grass and leaf clippings back into the lawn. To prepare the machine to recycle, do the following:

- If the side-discharge chute is on the machine, remove it and lower the side-discharge deflector; refer to Removing the Side-Discharge Chute (page 15).
- If the grass bag is on the machine, remove it; refer to Removing the Grass Bag (page 14).
- If the rear-discharge plug is not installed, grip it by the handle, raise the rear deflector, and insert it into the rear-discharge chute until the latch locks into place; refer to Figure 26.

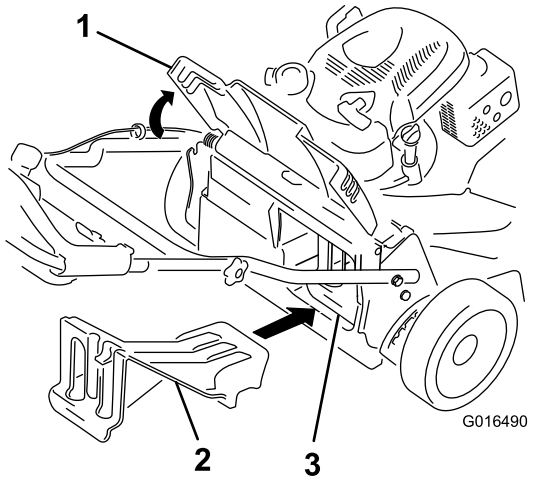

Figure 26

1. Rear deflector
2. Insert the rear-discharge plug
3. The rear-discharge plug installed

⚠ WARNING

Ensure that the rear-discharge plug is in place before you recycle the clippings. Never engage the blades without either the rear-discharge plug or the grass bag installed.

Bagging the Clippings

Use the grass bag when you want to collect grass and leaf clippings from the lawn.

⚠ WARNING

A worn grass bag could allow small stones and other similar debris to be thrown toward you or bystanders, resulting in serious personal injury or death.

Check the grass bag frequently. If it is damaged, install a new Toro replacement bag.

If the side-discharge chute is on the mower, remove it before bagging the clippings; refer to Removing the Side-Discharge Chute (page 15).

Installing the Grass Bag

1. Raise and hold up the rear deflector (Figure 27).

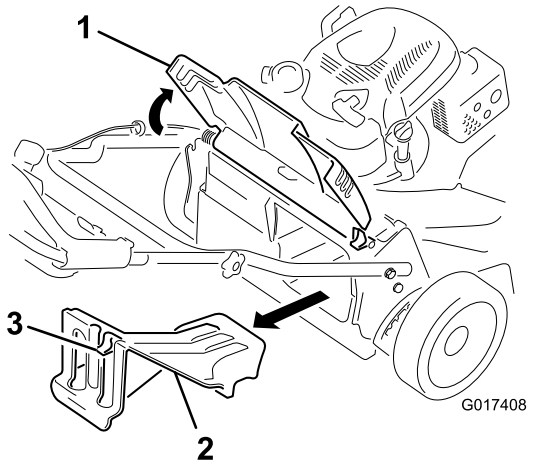

Figure 27

1. Rear deflector
2. Rear-discharge plug
3. Latch

2. Remove the rear-discharge plug by pulling down on the latch with your thumb and pulling the plug out from the machine (Figure 27).
3. Install the bag rod into the notches at the base of the handle and rock the bag back and forth to ensure that the rod is seated at the bottom of both notches; refer to Figure 28.

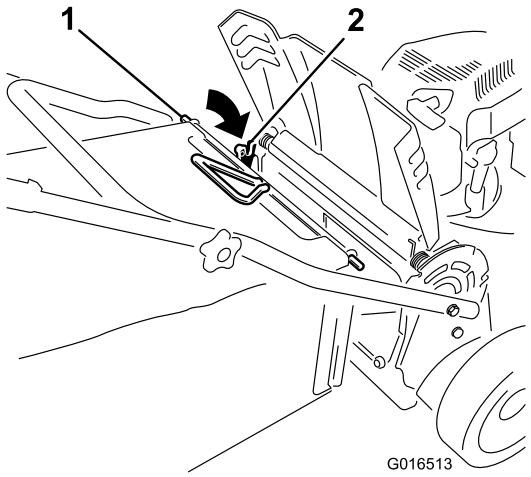

Figure 28

1. Bag rod
2. Notch (2)

4. Lower the rear deflector until it rests on the grass bag.

Removing the Grass Bag

To remove the bag, reverse the steps in Installing the Grass Bag (page 14).

Side-Discharging the Clippings

Use the side discharge for cutting very tall grass.

If the bag is on the machine, remove it and insert the rear-discharge plug; refer to Removing the Grass Bag (page 14) before side-discharging the clippings.

Important: Ensure that the rear-discharge plug is in place before you recycle the clippings (Figure 26).

⚠ WARNING

The blade is sharp; contacting the blade can result in serious personal injury.

Stop the engine and wait for all moving parts to stop before leaving the operating position.

Installing the Side-Discharge Chute

1. Lift open the side-discharge deflector (Figure 29).

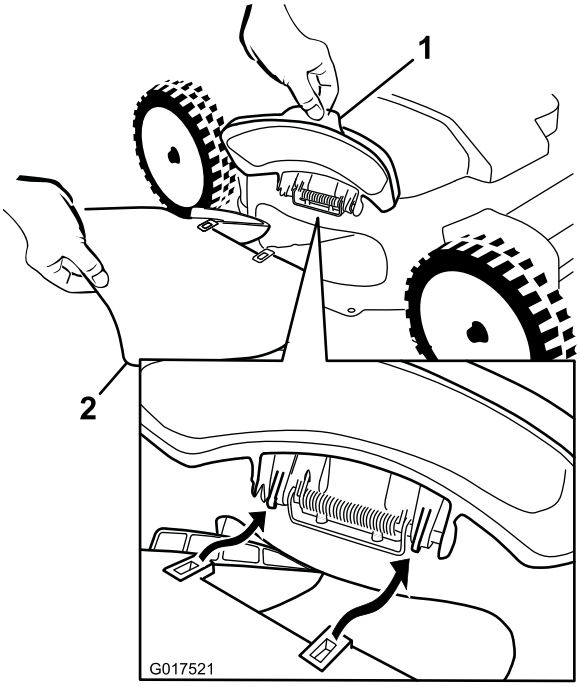

Figure 29

1. Side-discharge deflector
2. Side-discharge chute

2. Install the side-discharge chute as shown in Figure 29 and Figure 30, and close the deflector onto the chute.

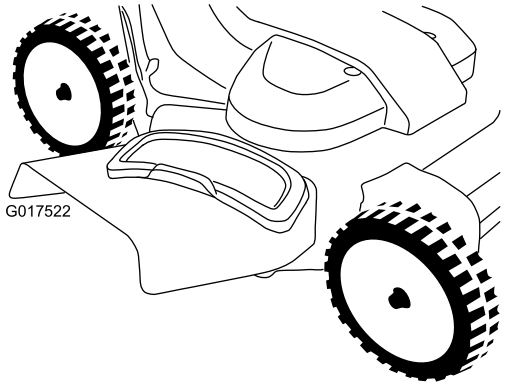

Figure 30

Removing the Side-Discharge Chute

To remove the side-discharge chute, reverse the steps in Installing the Side-Discharge Chute (page 14).

Operating Tips

General Mowing Tips

- Clear the area of sticks, stones, wire, branches, and other debris that the blade could hit.
- Avoid striking solid objects with the blade. Never deliberately mow over any object.
- If the machine strikes an object or starts to vibrate, immediately stop the engine, disconnect the wire from the spark plug, and examine the machine for damage.
- For best performance, install a new blade before the cutting season begins.
- Replace the blade when necessary with a Toro replacement blade.

Cutting Grass

- Cut only about a third of the grass blade at a time. Do not cut below the 51 mm (2-inch) setting unless the grass is sparse or it is late fall when grass growth begins to slow down. Refer to Adjusting the Cutting Height (page 10).
- When cutting grass over 15 cm (6 inches) tall, mow at the highest cutting height setting and walk slower; then mow again at a lower setting for the best lawn appearance. If the grass is too long, the machine may plug and cause the engine to stall.
- Mow only dry grass or leaves. Wet grass and leaves tend to clump on the yard and can cause the machine to plug or the engine to stall.

⚠ WARNING

Wet grass or leaves can cause serious injury if you slip and contact the blade. Mow only in dry conditions.

- Be aware of a potential fire hazard in very dry conditions, follow all local fire warnings, and keep the machine free of dry grass and leaf debris.
- Alternate the mowing direction. This helps disperse the clippings over the lawn for even fertilization.
- If the finished lawn appearance is unsatisfactory, try 1 or more of the following:
  - Replace the blade or have it sharpened.
  - Walk at a slower pace while mowing.
  - Raise the cutting height on your machine.
  - Cut the grass more frequently.
  - Overlap cutting swaths instead of cutting a full swath with each pass.
  - Set the cutting height on the front wheels one notch lower than the rear wheels. For example, set the front wheels at 51 mm (2-inches) and the rear wheels at 64 mm (2-1/2 inches).

Cutting Leaves

- After cutting the lawn, ensure that half of the lawn shows through the cut leaf cover. You may need to make more than a single pass over the leaves.
- If there are more than 13 cm (5 inches) of leaves on the lawn, set the front cutting height 1 or 2 notches higher than the rear cutting height.
- Slow down your mowing speed if the machine does not cut the leaves finely enough.

Maintenance

Note: Determine the left and right sides of the machine from the normal operating position.

Recommended Maintenance Schedule(s)

Maintenance Service Interval	Maintenance Procedure
After the first 5 hours	• Change the engine oil.
Before each use or daily	• Check the engine-oil level. • Check the blade-brake-clutch operation. • Check the air cleaner and clean or replace it, if necessary. • Check the cutting blades. • Clean grass clippings and dirt from under the machine.
Every 25 hours	• Charge the battery (electric-start model only).
Every 50 hours	• Change the engine oil. • Service the blade-drive system.
Yearly	• Service the air filter; replace it more frequently in dusty operating conditions. • Change the engine oil. • Service the cutting blades. • Refer to your engine operator's manual for any additional yearly maintenance procedures.
Yearly or before storage	• Charge the battery (electric-start model only). • Empty the fuel tank before repairs as directed and before yearly storage.

Important: **Refer to your engine owner's manual for additional maintenance procedures.**

Preparing for Maintenance

1. Stop the engine and wait for all moving parts to stop.
2. Disconnect the spark-plug wire from the spark plug (Figure 31).

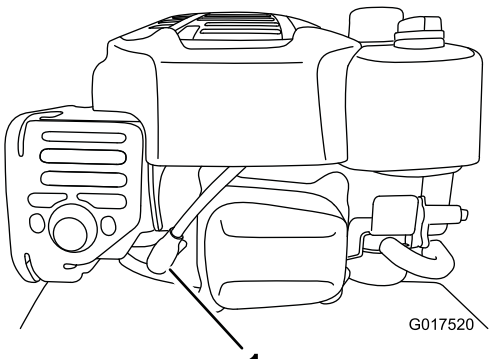

Figure 31

1. Spark-plug wire

3. After performing the maintenance procedure(s), connect the spark-plug wire to the spark plug.

Important: **Before tipping the machine to change the oil or replace the blade, allow the fuel tank to run dry through normal usage. If you must tip the machine prior to running out of fuel, use a hand fuel pump to remove the fuel. Always tip the machine onto its side, with the dipstick down.**

⚠ WARNING

Tipping the machine may cause the fuel to leak. Gasoline is flammable and explosive and can cause personal injury.

Run the engine dry or remove the gasoline with a hand pump; never siphon.

Servicing the Air Filter

Service Interval: Before each use or daily

Yearly

1. Loosen the fastener and remove the air-filter cover (Figure 32).

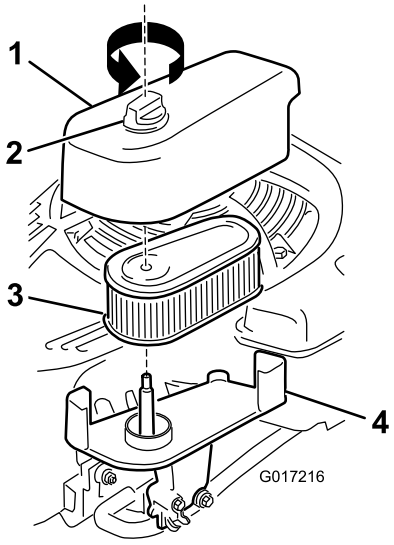

Figure 32

1. Cover
2. Fastener
3. Filter
4. Base

2. Remove and inspect the filter.
   - If the filter is damaged or is wet with oil or fuel, replace it.
   - If the filter is dirty, tap it on a hard surface several times or blow the debris outward from the interior of the filter using compressed air at less than 207 kPa (30 psi).

     Note: Do not brush or blow dirt from the outside of the filter; either forces dirt into the fibers.
3. Clean the air-filter body and cover using a damp rag. **Keep dirt away from the air opening.**
4. Install the filter onto the base.
5. Install the cover and screw the fastener down securely.

Changing the Engine Oil

Service Interval: After the first 5 hours

Every 50 hours

Yearly

Note: Run the engine a few minutes before changing the oil to warm it. Warm oil flows better and carries more contaminants.

1. Ensure that the fuel tank contains little or no fuel so that fuel does not leak out when you tip the machine onto its side.
2. Move the machine to a level surface.
3. Disconnect the wire from the spark plug. Refer to Preparing for Maintenance (page 16).
4. Tip the machine onto its side, with the dipstick down, until the upper handle rests on the ground.
5. Set an oil-drain pan under the dipstick.
6. Remove the dipstick and drain the used oil into the oil-drain pan (Figure 33).

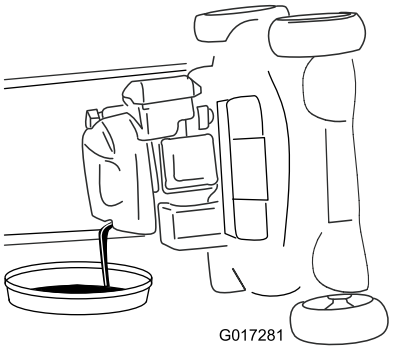

Figure 33

7. After draining the used oil, return the machine to the operating position.
8. Pour about 3/4 of the crankcase capacity of oil in the crankcase.

   Note: Max. fill: 0.59 L (20 oz), type: SAE 30 detergent oil with an API service classification of SF, SG, SH, SJ, SL, or higher.
9. Wait about 3 minutes for the oil to settle in the crankcase.
10. Wipe the dipstick clean with a clean cloth.
11. Insert the dipstick fully into the oil-fill tube, then remove the dipstick.
12. Read the oil level on the dipstick (Figure 34).

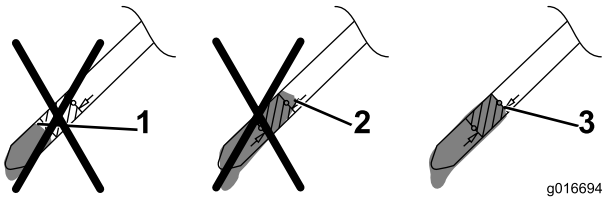

Figure 34

1. The oil level is too low; add oil to the crankcase.
2. The oil level is too high; remove oil from the crankcase.
3. The oil level is correct.

   - If the oil level is too low, **slowly** pour a small amount of oil into the oil-fill tube, wait 3 minutes, and repeat steps 10 through 12 until the oil level is correct as shown in Figure 34.
   - If the oil level is too high, drain the excess oil until you obtain the correct oil level on the dipstick.

Important: If the oil level in the crankcase is too low or too high and you run the engine, you may damage the engine.

13. Install the dipstick securely.
14. Recycle the used oil properly.

Charging the Battery

Service Interval: Every 25 hours

Yearly or before storage

Electric-start model only

⚠ WARNING

Battery posts, terminals, and related accessories contain lead and lead compounds, chemicals known to the State of California to cause cancer and reproductive harm. *Wash your hands after handling the battery.*

Charge the battery for 24 hours initially, then monthly (every 25 starts) or as needed. Always use the charger in a sheltered area, and charge the battery at room temperature (about 22° C, or 70° F) whenever possible.

Note: The machine is equipped with an alternator charging system.

1. Connect the charger to the wire harness, which is located below the ignition key (Figure 35).

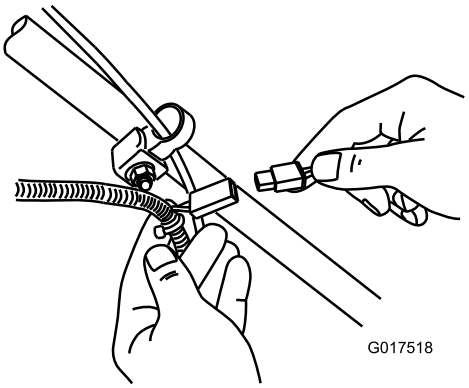

Figure 35

2. Plug the charger into a wall outlet.

   Note: Your battery charger may have a 2-color LED display that indicates the following states of charging:

   - A red light indicates that the charger is charging the battery.
   - A green light indicates that the charger is fully charged or is disconnected from the battery.
   - A flashing light that alternates between red and green indicates that the battery is nearly fully charged. This state lasts only a few minutes until the battery is fully charged.

   Note: When the battery no longer holds a charge, recycle the lead-acid battery according to local codes.

Replacing the Fuse

Electric-start model only

If the battery does not charge or the engine does not turn with the electric starter, the fuse may be blown; replace it with a 40-amp plug-in type fuse.

Important: You cannot start the machine with the electric starter or charge the battery unless a working fuse is installed.

1. Open the sealed fuse holder and replace the fuse (Figure 36).

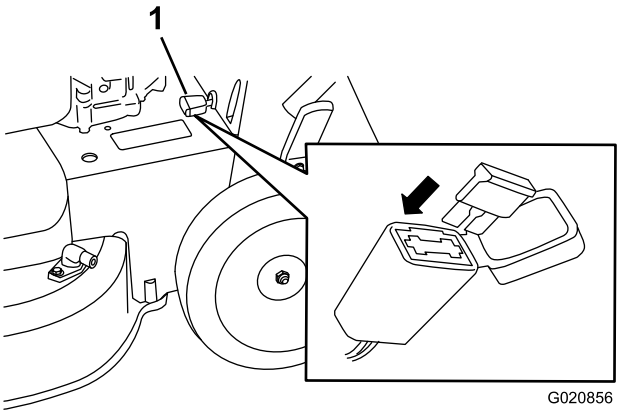

Figure 36

1. Fuse holder

2. Close the cover to the fuse holder, and ensure that it is sealed tightly.

Replacing the Battery

Electric-start model only

Removing the Old Battery

1. Contact an Authorized Toro Parts Dealer to obtain a replacement battery.
2. Remove the belt cover; refer to step 1 of Servicing the Blade-drive System (page 20).
3. Remove the rear-discharge plug.
4. Move the handle to the vertical position.
5. Remove the 4 small bolts that hold the rear-deflector and handle-lock lever assembly in place.
6. Fold the handle all the way forward.
7. Remove the rear-deflector and handle-lock lever assembly (Figure 36).

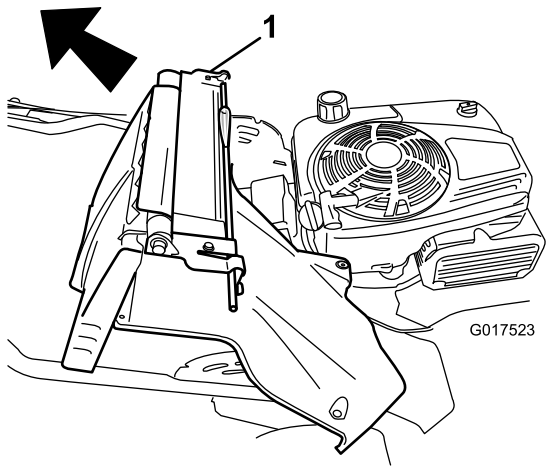

Figure 37

1. Rear-deflector and handle-lock lever assembly

8. Remove the cover from the battery.
9. Disconnect the leads from the battery.
10. Remove and battery and recycle it.

   Note: Recycle the battery according to your state and local regulations.

Installing the New Battery

1. Clean the battery-holding area on the machine housing.
2. Set the new battery in place on the machine housing.
3. Connect the leads to the new battery.

   Note: Ensure that you connect the black (negative) wire to the negative (-) terminal and the red (positive) wire to the positive (+) terminal.
4. Install the cover onto the battery.

   Note: Ensure that the cover fits properly over the wiring harness.
5. Install the rear-deflector and handle-lock lever assembly onto the machine.
6. Raise the handle to the vertical position.
7. Secure the shroud with the 4 small bolts that you removed in step 5 of Removing the Old Battery (page 18).
8. Install the rear-discharge plug.
9. Return the handle to the operating position.

Adjusting the Self-Propel Drive

Whenever you install a new self-propel cable or if the self-propel drive is out of adjustment, adjust the self-propel drive.

1. Turn the adjustment knob counterclockwise to loosen the cable adjustment (Figure 38).

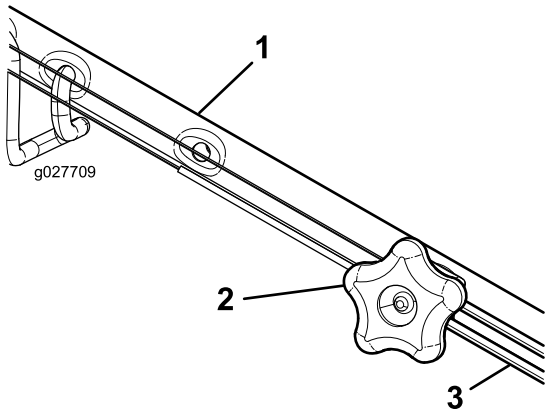

Figure 38

1. Handle (left side)
2. Adjustment knob
3. Self-propel-drive cable

2. Adjust the tension on the cable (Figure 38) by pulling it back or pushing it forward and holding that position.

   Note: Push the cable toward the engine to increase the traction; pull the cable away from the engine to decrease the traction.
3. Turn the adjustment knob clockwise to tighten the cable adjustment.

   Note: Tighten the knob firmly by hand.

Servicing the Blade-Drive System

Service Interval: Every 50 hours

1. Remove the blade-drive system cover (Figure 39).

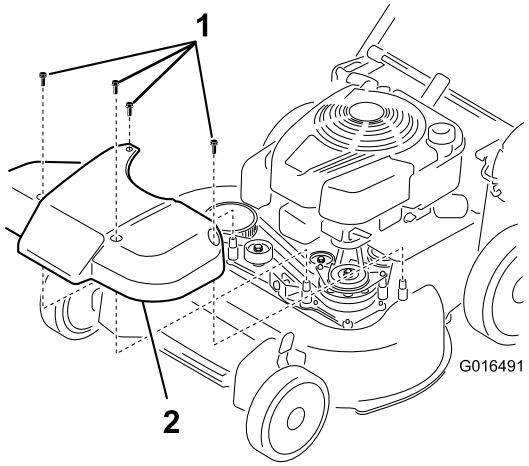

Figure 39

1. Bolts
2. Cover

2. Brush or blow out debris from the inside of the shield and around all the parts.
3. Hold a 0.25 mm (0.010-inch) feeler gauge, a piece of paper, or a note card against the wall and slide it down behind the belt tension spring.

   Note: If there is a visible gap between the gauge and the spring, tighten the adjusting bolt and the nut until the paper barely slides freely in and out of the gap (Figure 40).

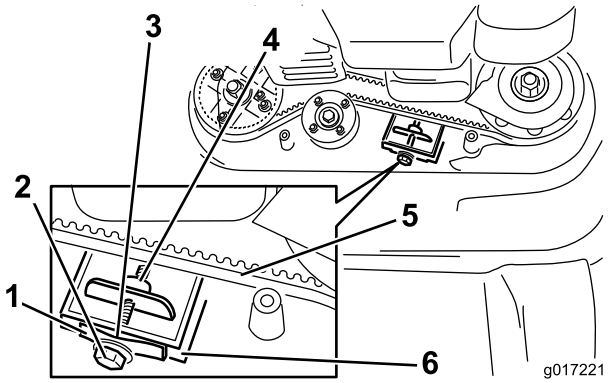

Figure 40

1. Belt-tension spring
2. Adjusting bolt
3. Gap
4. Adjusting nut
5. Blade-drive belt
6. Wall

Important: Do not overtighten the adjusting bolt. This could damage the blade-drive belt.

4. Install the blade-drive system cover that you previously removed.

Servicing the Cutting Blades

Service Interval: Yearly

Important: ***You will need a torque wrench to install the blades properly.*** **If you do not have a torque wrench or are uncomfortable performing this procedure, contact an Authorized Service Dealer.**

Examine the blades for sharpness and any wear or damage whenever you run out of gasoline. If the blade edges are dull or nicked, have them sharpened or replace the blades. If a blade is worn, bent, damaged or cracked, replace it immediately with a genuine Toro replacement blade.

⚠ DANGER

A worn or damaged blade can break, and a piece of the blade could be thrown toward the operator or a bystander, resulting in serious personal injury or death.

- **Inspect the blades periodically for wear or damage.**
- **Replace a worn or damaged blade.**

Note: Maintain sharp blades throughout the cutting season, because sharp blades cut cleanly without tearing or shredding the grass blades.

Preparing to Service the Cutting Blades

1. Lock the handle in the vertical position (Figure 41); refer to Adjusting the Handle Height (page 11).

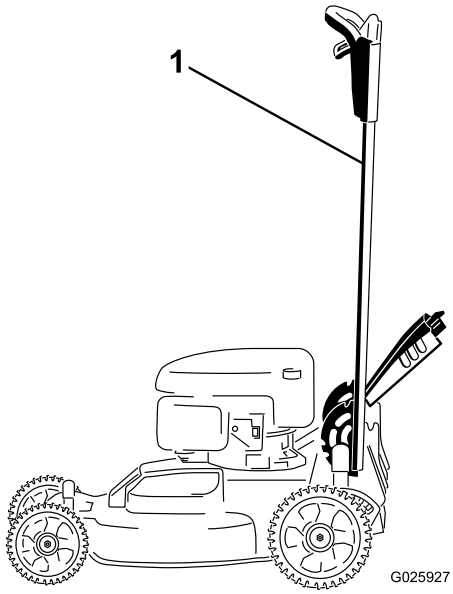

Figure 41

1. Handle locked in the vertical position

2. Tip the machine onto its side, with the dipstick down, until the upper handle rests on the ground.

⚠ WARNING

The blades are sharp; contacting a blade could result in serious personal injury.

- **Disconnect the wire from the spark plug.**
- **Wear gloves when servicing the blade.**

Inspecting the Blades

Service Interval: Before each use or daily

1. Inspect the cutting edges (Figure 42). If the edges are not sharp or have nicks, remove the blades and have them sharpened or replace them.

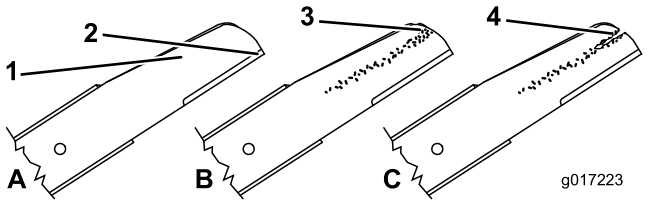

Figure 42

1. Cutting edge
2. Curved area
3. Wear/slot forming
4. Crack

2. Inspect the blades themselves, especially the curved area (Figure 42). If you notice any damage, wear, or a slot forming in this area, immediately replace it with a new blade.

⚠ DANGER

If you allow a blade to wear, a slot will form between the sail and flat part of the blade. Eventually a piece of the blade may break off and be thrown from under the housing, possibly resulting in serious injury to you or bystanders.

- **Inspect the blade periodically for wear or damage.**
- **Never try to straighten a blade that is bent or weld a broken or cracked blade.**
- **Replace a worn or damaged blade.**

3. Check for bent blades; refer to Checking for Bent Blades (page 21).

Checking for Bent Blades

1. Rotate the blades to the position shown in Figure 43.

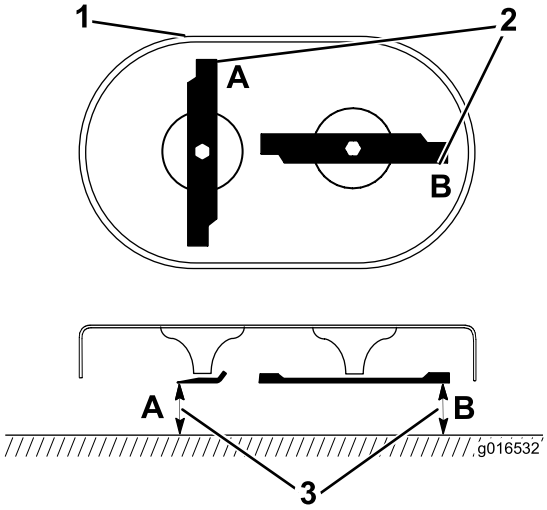

Figure 43

1. Front of cutting deck
2. Measure at locations A and B
3. Measure from the cutting edge to a smooth, level surface

2. Measure from a level surface to the cutting edges at locations **A** and **B** (Figure 43), and record both dimensions.
3. Rotate the blades so that their opposite ends are at locations **A** and **B** (Figure 43).
4. Repeat the measurements in step 2 and record them.

   Note: If the difference between the dimensions **A** and **B** obtained in steps 2 and 4 exceeds 1/8 in (3 mm), the blade is bent and you will need to replace it. Refer to Removing the Blades (page 22) and Installing the Blades (page 22).

⚠ WARNING

A blade that is bent or damaged could break apart and could seriously injure or kill you or bystanders.

- **Always replace a bent or damaged blade with a new blade.**
- **Never file or create sharp notches in the edges or surfaces of a blade.**

Removing the Blades

Replace the blades when the machine hits a solid object or when a blade is out of balance or bent. Use only genuine Toro replacement blades.

1. Use a block of wood to hold each blade steady and turn the blade bolt counterclockwise as shown in Figure 44.

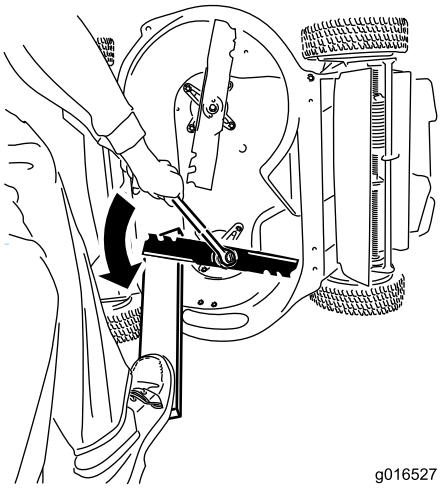

Figure 44

2. Remove each blade as shown in Figure 45.

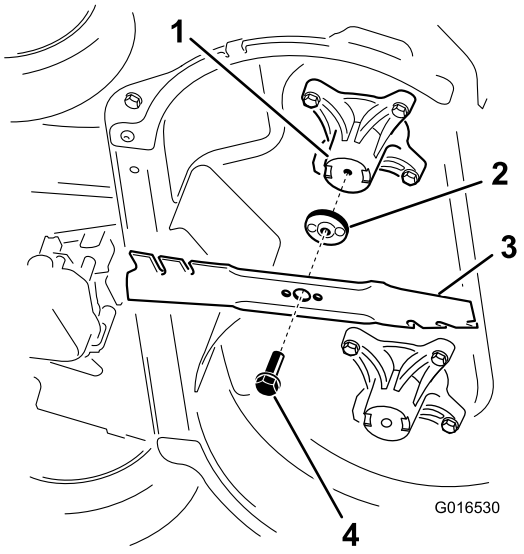

Figure 45

1. Spindle (2)
2. Blade driver (2)
3. Blade (2)
4. Blade bolt (2)

3. Inspect the pins on the blade drivers for wear and damage.

Installing the Blades

1. Install the first blade so that it is horizontal, along with all mounting hardware as shown in Figure 45.

   Note: Tighten the bolt with your fingers.

   Important: Position the curved ends of the blades to point toward the machine housing. Be sure to nest the raised areas on each blade driver with the recesses in the head of its corresponding spindle, and the pins on the other side of each blade driver with the holes in its corresponding blade.

2. Steady each blade with a board and turn the blade bolt clockwise with a torque wrench as shown in Figure 46; torque the blade bolt to 82 N-m (60 ft-lb).

   Important: A bolt torqued to 82 N-m (60 ft-lb) is very tight. Put your weight behind the wrench and tighten the bolt securely. This bolt is very difficult to overtighten.

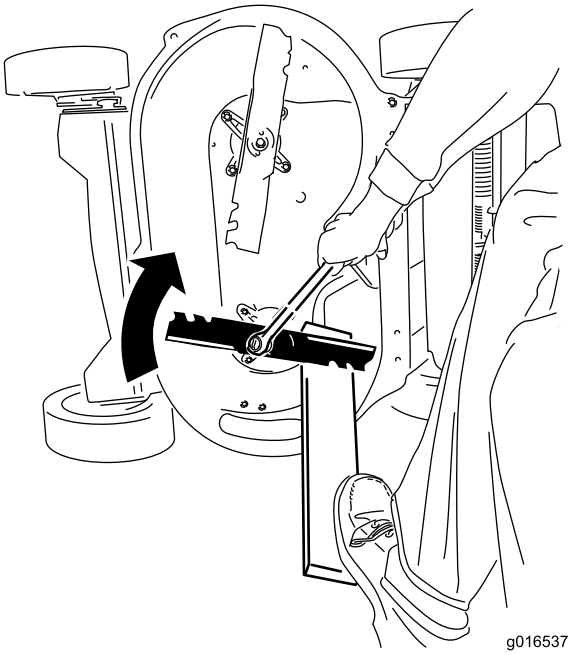

Figure 46

3. Rotate the installed blade 1/4 turn until it is vertical, and install the other blade in the same manner as the first (refer to step 1).

   Note: The blades should be perpendicular, forming an inverted "T" as shown in Figure 47.

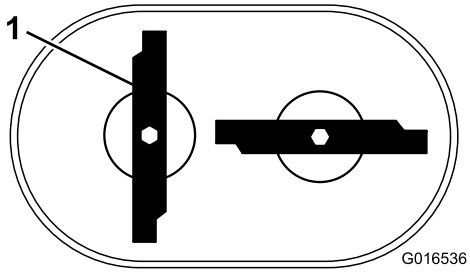

Figure 47

1. Blade (2)

4. Tighten the second blade; refer to step 2.
5. Rotate the blades by hand a full 360° turn to ensure that they do not touch.

   Note: If the blades touch each other, they are not mounted correctly. Repeat steps 1 through 3, until the blades no longer touch each other.

⚠ WARNING

Incorrectly installing the blades could damage the machine or cause an injury to the operator or to bystanders.

Cleaning under the Machine

Service Interval: Before each use or daily

1. Move the machine to a level surface.
2. Stop the engine and wait for all moving parts to stop before leaving the operating position.
3. Lower the machine to its lowest cutting-height setting. Refer to Adjusting the Cutting Height (page 10).
4. Attach a hose to the washout fitting, and turn the water on high (Figure 48).

   Note: Spread petroleum jelly on the washout fitting O-ring to make the coupling slide on easier and protect the O-ring.

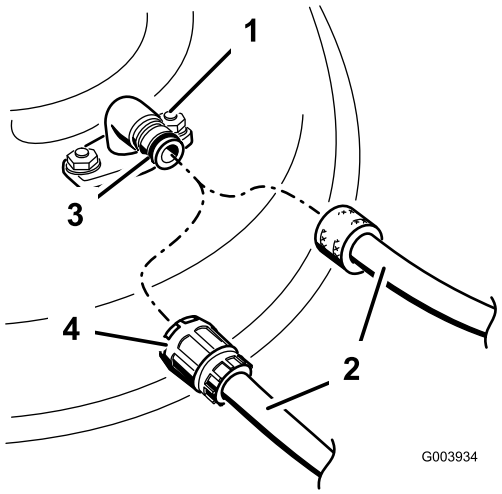

Figure 48

1. Washout fitting
2. Hose
3. O-ring
4. Coupling

5. Start the engine, engage the blade-control lever, and let the machine run for 1 to 3 minutes.
6. Disengage the blade-control lever, stop the engine, and wait for all moving parts to stop.
7. Shut off the water and remove the coupling from the washout fitting.

   Note: If the machine is not clean after a single washing, soak it and let it stand for 30 minutes. Then repeat the process.
8. Run the machine again and engage the blades for 1 to 3 minutes to remove the excess water.

⚠ WARNING

A broken or missing washout fitting could expose you and others to thrown objects or blade contact. Contact with a blade or thrown debris can cause injury or death.

- **Replace a broken or missing washout fitting immediately, before using the machine again.**
- **Never put your hands or feet under the machine or through openings in the machine.**

Storage

Store the machine in a cool, clean, dry place.

General Information

1. Perform the recommended annual maintenance procedures; refer to Maintenance (page 16).
2. Clean under the machine housing; refer to Cleaning under the Machine (page 23).
3. Remove chaff, dirt, and grime from the external parts of the engine, the shrouding, and the top of the machine.
4. Check the condition of the blades; refer to Inspecting the Blades (page 21).
5. Service the air filter; refer to Servicing the Air Filter (page 17).
6. Tighten all nuts, bolts, and screws.
7. Touch up all rusted or chipped paint surfaces with paint available from an Authorized Service Dealer.
8. Charge the battery for 24 hours, then unplug the battery charger and store the machine in an unheated area. If you must store the machine in a heated area, you must charge the battery every 90 days (electric-start model only).
9. Fold the handle for storage; refer to Adjusting the Handle Height (page 11).

Preparing the Fuel System

⚠ WARNING

Gasoline can vaporize if you store it over long periods of time and explode if it comes into contact with an open flame.

- **Do not store gasoline over long periods of time.**
- **Do not store the machine with gasoline in the fuel tank or the carburetor in an enclosure with an open flame. (For example, a furnace or a water heater pilot light.)**
- **Allow the engine to cool before storing it in any enclosure.**

On the last refueling of the year, add fuel stabilizer to the fuel as directed by the engine manufacturer. Empty the fuel tank when mowing the last time before storing the machine.

1. Run the machine until the engine stops from running out of fuel.
2. Start the engine again.
3. Allow the engine to run until it stops. When you can no longer start the engine, it is sufficiently dry.

Preparing the Engine

1. While the engine is still warm, change the engine oil; refer to Changing the Engine Oil (page 17).
2. Remove the spark plug.
3. Using an oil can, add about 30 ml (1 oz), of motor oil to the engine through the spark-plug hole.
4. Slowly pull the starter rope several times to distribute oil throughout the cylinder.
5. Install the spark plug but do not connect the wire to the spark plug. Secure the wire so that it does not come into contact with the spark plug.

Removing the Machine from Storage

1. Unfold the handle; refer to Adjusting the Handle Height (page 11).
2. Check and tighten all fasteners.
3. Remove the spark plug and spin the engine rapidly using the starter to blow excess oil from the cylinder.
4. Inspect the spark plug and replace it if it is dirty, worn, or cracked; refer to the engine operator's manual.
5. Install the spark plug and tighten it to the recommended torque of 20 N-m (180 in-lb).
6. Perform any needed maintenance procedures; refer to Maintenance (page 16).
7. Check the engine oil level; refer to Checking the Engine-Oil Level (page 9).
8. Fill the fuel in the fuel tank with fresh gasoline; refer to Filling the Fuel Tank (page 9).
9. Charge the battery (electric-start model only); refer to Charging the Battery (page 18).
10. Connect the wire to the spark plug.

Notes:

Notes:

Notes:

The Toro Total Coverage Guarantee

A 3-Year Full Warranty (45 Day Limited Warranty for Commercial Use)

The Toro GTS Starting Guarantee

A 3-Year Full Warranty (Not Applicable for Commercial Use)

TimeMaster
Walk Power Mowers

Conditions and Products Covered

The Toro Company and its affiliate, Toro Warranty Company, pursuant to an agreement between them, jointly promise to repair the Toro Product listed below if used for residential purposes*; if it is defective in materials or workmanship or if it stops functioning due to the failure of a component; or if the Toro GTS (Guaranteed to Start) engine will not start on the first or second pull, provided the routine maintenance required in the *Operator's Manual* have been performed.

This warranty covers the cost of parts and labor, but you must pay transportation costs.

The following time periods apply from the date of purchase:

Products	Warranty Period
TimeMaster Mower and Attachments	3 - year full warranty
GTS (Guaranteed to Start)	3 - year full warranty
Battery	1 - year full warranty

Limited Warranty for Commercial Use*

These Toro Products used for commercial, institutional, or rental use, are warranted for 45 days against defects in materials or workmanship. Components failing due to normal wear are not covered by this warranty.

The Toro GTS (Guaranteed to Start) Starting Guarantee does not apply when the product is used commercially*.

Instructions for Obtaining Warranty Service

If you think that your Toro Product contains a defect in materials or workmanship, or if a normal, able-bodied adult can no longer start your product's engine in one or two pulls, follow this procedure:

1. Contact any Authorized Toro Service Dealer to arrange service at their dealership. To locate a dealer convenient to you, access our web site at www.Toro.com. You may also call the numbers listed in item #3 to use the 24-hour Toro Dealer locator system.
2. Bring the product and your proof of purchase (sales receipt) to the Service Dealer. The dealer will diagnose the problem and determine if it is covered under warranty.
3. If for any reason you are dissatisfied with the Service Dealer's analysis or with the assistance provided, contact us at:

   Customer Care Department, RLC Division
   The Toro Company
   8111 Lyndale Avenue South
   Bloomington, MN 55420-1196
   Toll free at 866-214-9807 (U.S. customers)
   Toll free at 866-214-9808 (Canadian customers)

Owner Responsibilities

You must maintain your Toro Product by following the maintenance procedures described in the *Operator's Manual*. Such routine maintenance, whether performed by a dealer or by you, is at your expense.

Items and Conditions Not Covered

There is no other express warranty except for special emission system coverage and engine warranty coverage on some products. This express warranty does not cover the following:

- Cost of regular maintenance service or parts, such as filters, fuel, lubricants, oil changes, spark plugs, air filters blade sharpening or worn blades, cable/linkage adjustments, or brake and clutch adjustments
- Components failing due to normal wear
- Any product or part which has been altered or misused or neglected and requires replacement or repair due to accidents or lack of proper maintenance
- Pickup and delivery charges
- Repairs or attempted repairs by anyone other than an Authorized Toro Service Dealer
- Repairs necessary due to failure to follow recommended fuel procedure (consult *Operator's Manual* for more details)
  - Removing contaminants from the fuel system is not covered
  - Use of old fuel (more than one month old) or fuel which contains more than 10% ethanol or more that 15% MTBE
  - Failure to drain the fuel system prior to any period of non-use over one month
- Repairs or adjustments to correct starting difficulties due to the following:
  - Failure to follow proper maintenance procedures or recommended fuel procedure
  - Rotary mower blade striking an object
- Special operational conditions where starting may require more than two pulls:
  - First time starts after extended period of non-use over three months or seasonal storage
  - Cool temperature starts such as those found in early spring and late autumn
  - Improper starting procedures - if you are having difficulty starting your unit, please check the *Operator's Manual* to ensure that you are using the correct starting procedures. This can save an unnecessary visit to an Authorized Toro Service Dealer.

General Conditions

All repairs covered by these warranties must be performed by an Authorized Toro Service Dealer using Toro-approved replacement parts. Repair by an Authorized Toro Service Dealer is your sole remedy under this warranty.

Neither The Toro Company nor Toro Warranty Company is liable for indirect, incidental, or consequential damages in connection with the use of the Toro Products covered by these warranties, including any cost or expense of providing substitute equipment or service during reasonable periods of malfunction or non-use pending completion of repairs under these warranties.

Some states do not allow exclusions of incidental or consequential damages, so the above exclusions may not apply to you.

This warranty gives you specific legal rights, and you may also have other rights which vary from state to state.

Countries Other than the United States or Canada

Customers who have purchased Toro products exported from the United States or Canada should contact their Toro Distributor (Dealer) to obtain guarantee policies for your country, province, or state. If for any reason you are dissatisfied with your Distributor's service or have difficulty obtaining guarantee information, contact the Toro importer. If all other remedies fail, you may contact us at Toro Warranty Company.

Australian Consumer Law: Australian customers will find details relating to the Australian Consumer Law either inside the box or at your local Toro Dealer.

*Residential purposes means use of the product on the same lot as your home. Use at more than one location, or institutional or rental use, is considered commercial use, and the commercial use warranty would apply.