Form No. 3376-936 Rev D

TORO®

Count on it.

Operator's Manual

8 and 11 Blade DPA Cutting Unit with 5in Reel

Reelmaster® 5210/5410 Series Traction Unit

Model No. 03694—Serial No. 313000001 and Up
Model No. 03695—Serial No. 313000001 and Up

Register at www.Toro.com.
Original Instructions (EN)

CE

3376-936 D

Introduction

Read this information carefully to learn how to operate and maintain your product properly and to avoid injury and product damage. You are responsible for operating the product properly and safely.

You may contact Toro directly at www.Toro.com for product and accessory information, help finding a dealer, or to register your product.

Whenever you need service, genuine Toro parts, or additional information, contact an Authorized Service Dealer or Toro Customer Service and have the model and serial numbers of your product ready. Figure 1 identifies the location of the model and serial numbers on the product. Write the numbers in the space provided.

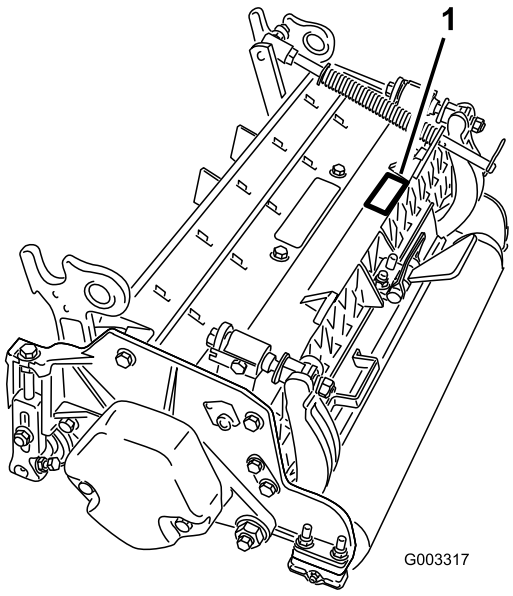

Figure 1

1. Location of the model and serial numbers

Model No. _____

Serial No. _____

This manual identifies potential hazards and has safety messages identified by the safety alert symbol (Figure 2), which signals a hazard that may cause serious injury or death if you do not follow the recommended precautions.



Figure 2

1. Safety alert symbol

This manual uses 2 other words to highlight information. **Important** calls attention to special mechanical information and **Note** emphasizes general information worthy of special attention.

Contents

Safety 3
Safety and Instructional Decals 3
Setup 4
1 Inspection 4
2 Cutting Unit Kickstand 4
3 Adjusting the Rear Shield 5
4 Mount the Counter Weights 5
Product Overview 7
Specifications 7
Cutting Unit Accessories and Kits (see parts catalog for part numbers) 7
Operation 8
Adjustments 8
Height of Cut Chart Terms 10
Height of Cut Chart 12
Servicing Bedknife 15
Maintenance 16
Lubrication 16
Adjusting the Reel Bearings 16
Servicing the Bedbar 17
Servicing the HD Dual Point Adjusters (DPA) 18
Servicing the Roller 19

© 2014—The Toro® Company
8111 Lyndale Avenue South
Bloomington, MN 55420

Contact us at www.Toro.com.
Printed in the USA.
All Rights Reserved

Safety

Hazard control and accident prevention are dependent upon the awareness, concern, and proper training of the personnel involved in the operation, transport, maintenance, and storage of the machine. Improper use or maintenance of the machine can result in injury or death. To reduce the potential for injury or death, comply with the following safety instructions.

- Read, understand, and follow all instructions in the traction unit operators manual before operating the cutting unit.
- Read, understand, and follow all instructions in this operators manual before operating the cutting unit.
- Never allow children to operate the traction unit or cutting units. Do not allow adults to operate traction unit or cutting units without proper instruction. Only trained operators who have read this manual should operate the cutting units.
- Never operate the cutting units when under the influence of drugs or alcohol.
- Keep all shields and safety devices in place. If a shield, safety device or decal is illegible or damaged, repair or replace it before operation is commenced. Also tighten any loose nuts, bolts, and screws to ensure cutting unit is in safe operating condition.
- Always wear substantial shoes. Do not operate cutting units while wearing sandals, tennis shoes, sneakers or shorts. Also, do not wear loose fitting clothing which could get caught in moving parts. Always wear long pants and substantial shoes. Wearing safety glasses, safety shoes and a helmet is advisable and required by some local ordinances and insurance regulations.
- Remove all debris or other objects that might be picked up and thrown by the cutting unit reel blades. Keep all bystanders away from the working area.
- If the cutting blades strike a solid object or the unit vibrates abnormally, stop and shut the engine off. Check cutting unit for damaged parts. Repair any damage before restarting and operating the cutting unit.
- Lower the cutting units to the ground and remove key from ignition switch whenever machine is left unattended.
- Be sure cutting units are in safe operating condition by keeping nuts, bolts and screws tight.
- Remove key from ignition switch to prevent accidental starting of the engine when servicing, adjusting or storing the machine.
- Perform only those maintenance instructions described in this manual. If major repairs are ever needed or assistance is desired, contact an Authorized Toro Distributor.
- To ensure optimum performance and safety, always purchase genuine Toro replacement parts and accessories to keep the Toro all TORO**. Never use "will-fit" replacement parts and accessories made by other manufacturers**. Look for the Toro logo to assure genuineness. Using unapproved replacement parts and accessories could void the warranty of The Toro Company.

Safety and Instructional Decals

Safety decals and instructions are easily visible to the operator and are located near any area of potential danger. Replace any decal that is damaged or lost.

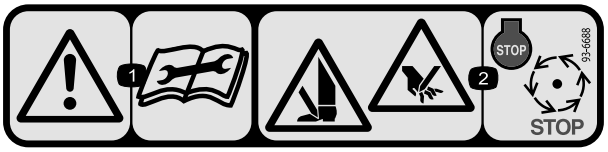

93–6688

1. Warning—read the *Operator's Manual* before performing maintenance.
2. Cutting hazard of hand or foot—stop the engine and wait for all moving parts to stop.

Setup

Loose Parts

Use the chart below to verify that all parts have been shipped.

Procedure	Description	Qty.	Use
1	Cutting unit	1	Inspect the cutting unit
2	No parts required	–	Use the kickstand when tipping the cutting unit
3	No parts required	–	Adjust the rear shield
4	No parts required	–	Mount the counter weights

Media and Additional Parts

Description	Qty.	Use
Parts Catalog Operator's Manual Certificate of Compliance	1 1 1	Review the material and save in an appropriate place:
O-ring	1	Use when mounting reel motor to cutting unit
Screws	2	Use to mount reel motor to cutting unit

Note: Determine the left and right sides of the machine from the normal operating position.

1

Inspection

Parts needed for this procedure:

1	Cutting unit

Procedure

After the cutting unit is removed from the box, inspect the following:

1. Check each end of the reel for grease. Grease should be visibly evident in the reel bearings and internal splines of the reel shaft.
2. Ensure that all nuts and bolts are securely tightened.
3. Make sure the carrier frame suspension operates freely and does not bind when moved back and forth.

2

Cutting Unit Kickstand

No Parts Required

Procedure

Whenever the cutting unit has to be tipped to expose the bedknife/reel, prop up the rear of the cutting unit with the kickstand (supplied with the traction unit) to make sure the nuts on the back end of the bedbar adjusting screws are not resting on the work surface (Figure 3).

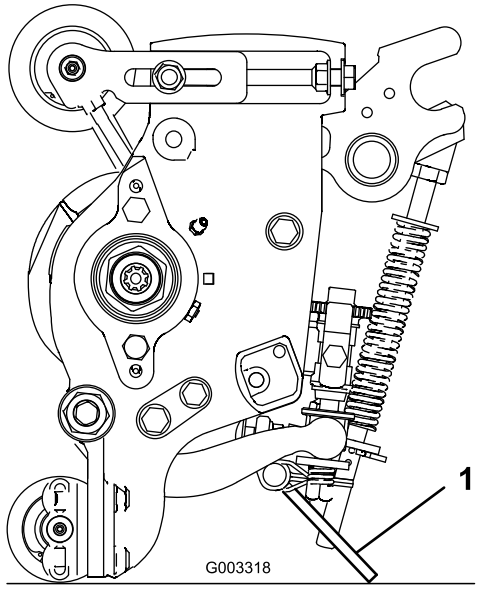

Figure 3

1. Cutting unit kickstand

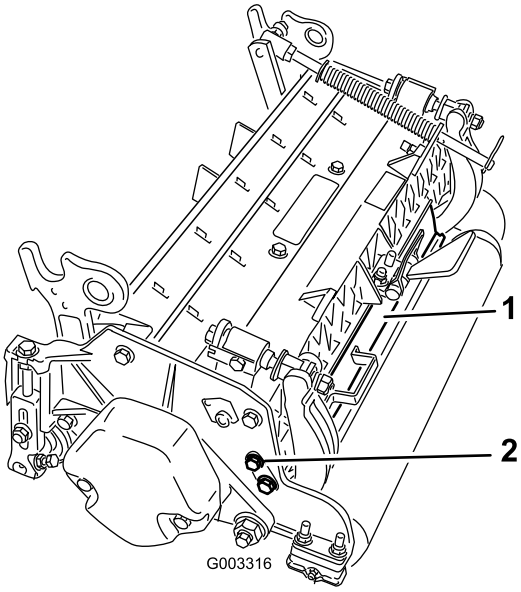

Figure 4

1. Rear shield
2. Cap screw

3

Adjusting the Rear Shield

No Parts Required

Procedure

Under most conditions, best dispersion is attained when the rear shield is closed (front discharge). When conditions are heavy or wet, rear shield may be opened.

To open the rear shield (Figure 4), loosen the cap screw securing the shield to the left side plate, rotate the shield to the open position and tighten the cap screw.

4

Mount the Counter Weights

No Parts Required

Procedure

All cutting units are shipped with the counter weight mounted to the left end of the cutting unit. Use the following diagram to determine the position of the counter weights and reel motors.

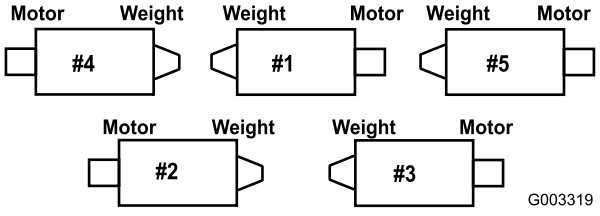

Figure 5

1. On the #2 and #4 cutting units, remove the 2 cap screws securing the counter weight to the left end of the cutting unit. Remove the counter weight (Figure 6).

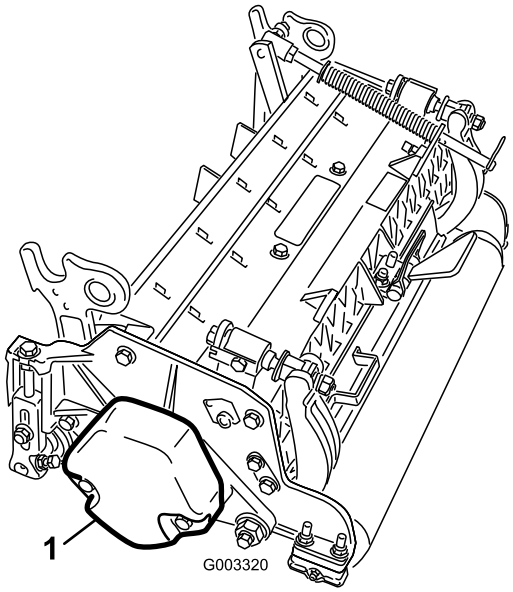

Figure 6

1. Counter weight

2. On right end of cutting unit, remove the plastic plug from the bearing housing (Figure 7).
3. Remove the 2 cap screws from the right side plate (Figure 7).

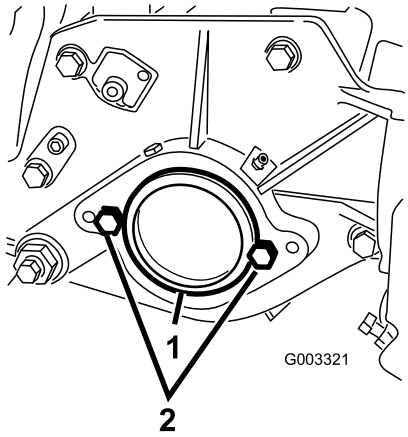

Figure 7

1. Plastic plug
2. Cap screw (2)

4. Install the counter weight to the right end of the cutting unit with the 2 screws previously removed.
5. Loosely install the 2 reel motor mounting cap screws to the left side plate of the cutting unit (Figure 7).

Product Overview

Specifications

Model Number	Net Weight
03694	51 kg (112 lb)
03695	52 kg (116 lb)

Cutting Unit Accessories and Kits (see parts catalog for part numbers)

Note: All accessories and kits are 1 per cutting unit unless otherwise specified.

Grass Basket Kit: A series of clipping collection baskets attached to the front of the cutting units to collect grass clippings.

Rear Lift Cylinder Kit: Collars assembled on rear cutting unit lift arm cylinders to limit the height of the cutting units. This increases the area for the rear grass baskets.

Rear Roller Brush Kit: A high speed, high contact brush that keeps the rear roller free of grass and debris, which maintains a consistent height of cut and prevents clumping. This leads to a better after-cut appearance.

Groomer Kit: Rotating blades assembled behind the front roller which provide the best method for reducing grain and spongy turf by standing up the grass before cutting. The groomer also knocks off dew for decreased stickiness and clumping, opens up canopy for better grass clipping integration, and lifts grass for a clean crisp cut. The overall design improves the quality of cut for healthier turf grass while improving the after cut appearance

Broomer Kit: Multiple brush strips woven into the helical groomer blades improve the effectiveness of the groomer kit. Performance of the groomer is enhanced by enabling a full width "Brooming" effect of turf while opening up canopy for better grass clipping integration. The combination of groomer and broomer systems optimize the quality of cut and after-cut appearance for more consistent playing conditions.

Comb/Scraper Kit: A fixed comb installed behind the front roller which helps reduce grain and spongy turf by standing up the grass before cutting. A scraper for the front Wiehle roller is included in the kit.

High HOC Kit: New front roller brackets and additional spacers for the rear roller allows the cutting unit to achieve heights of cut above 5 mm (1.00 inch). The new front roller brackets also move the front roller out farther to improve after-cut appearance at these heights of cut.

Shoulder Roller: Helps reduce over-lap marks for warm season grasses (Bermuda, Zoysia, Paspalum).

Collar Kit (6 needed per roller): Helps reduce over lap marks for warm season grasses (Bermuda, Zoysia, Paspalum). This kit is installed on the outer three grooves of the existing Wiehle roller, but is not as aggressive as the Shoulder roller.

Long Rear Roller: Helps reduce over-lap marks and mismatch between cutting units for warm season grasses (Bermuda, Zoysia, Paspalum).

Full Front Roller: Helps produce more pronounced striping (repeated cutting in the same direction/path), however, effective height of cut is raised and quality of cut is reduced.

Scrapers (Wiehle, Shoulder, Rear roller, Full Front Roller): Fixed scrapers for all optional rollers are available for reducing grass build up on rollers which can affect height of cut settings.

Roller Rebuild Kit: Includes all the bearings, bearing nuts, inner seals and outer seals required to rebuild a roller.

Roller Rebuild Tool Kit: Includes all the tools and installation instructions required to rebuild a roller with the roller rebuild kit.

Operation

Note: Determine the left and right sides of the machine from the normal operating position.

Adjustments

Adjusting the Bedknife to the Reel

Use this procedure to set the bedknife to the reel and to check the condition of the reel and bedknife and their interaction. After completing this procedure, always test the cutting unit performance under your field conditions. You may need to make further adjustments to obtain optimal cutting performance.

Important: Do not overtighten the bedknife to the reel or you will damage it.

- After backlapping the cutting unit or grinding the reel, you may need to mow with the cutting unit for a few minutes and then perform this procedure to adjust the bedknife to the reel as the reel and bedknife adjust to each other.
- You may need additional adjustments if the turf is extremely dense or your cutting height is very low.

You will need the following tools to complete this procedure:

- Shim (0.002 inch)—Toro part number 125-5611
- Cutting performance paper—Toro part number 125-5610

1. Position the cutting unit on a flat, level work surface. Turn the bedbar adjusting screws counterclockwise to ensure that the bedbar does not contact the reel (Figure 8).

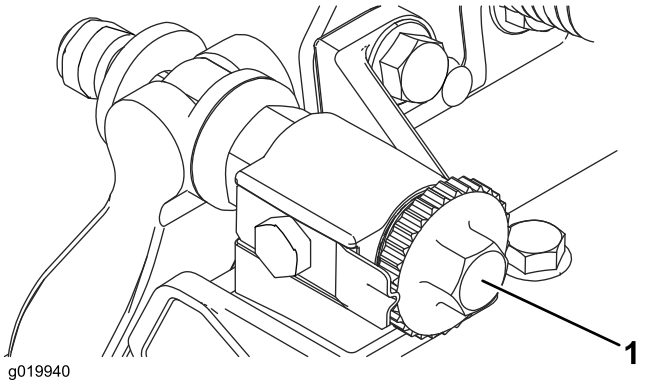

Figure 8

1. Bedbar adjusting screw

2. Tip the mower, to expose the bedknife and reel.

   Important: Make sure nuts on back end of bedbar adjusting screws are not resting on the work surface (Figure 9).

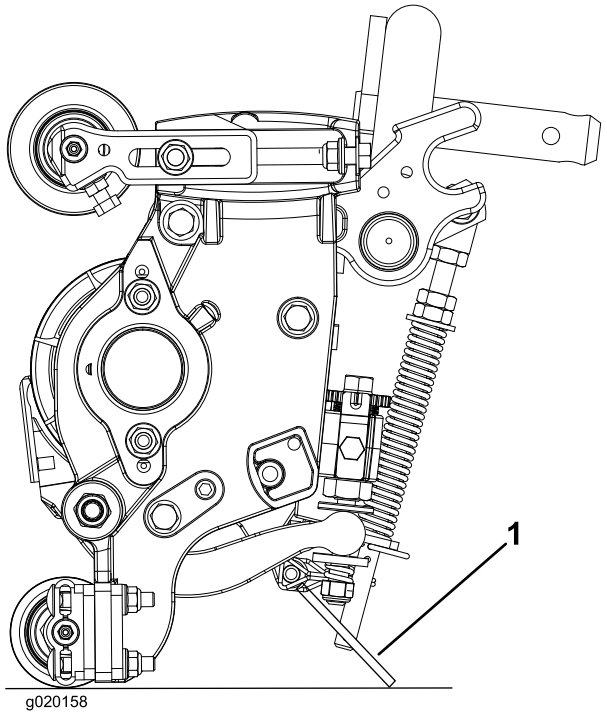

Figure 9

1. Cutting unit kickstand

3. Rotate the reel so that a blade crosses the bedknife approximately 25 mm (1 inch) in from the end of the bedknife on the right hand side of the cutting unit. Putting an identifying mark on this blade will make subsequent adjustments easier. Insert the 0.05 mm (0.002 inch) shim between the marked reel blade and the bedknife at the point where the blade crosses the bedknife.
4. Turn the right bedbar adjuster clockwise until you feel **light** pressure (i.e. drag) on the shim, then back off the bedbar adjuster two clicks and remove the shim. (Since adjusting one side of the cutting unit affects the other side, the two clicks will provide clearance for when the other side is adjusted)

   Note: If starting with a large gap, both sides should initially be drawn closer by alternately tightening the right and left hand sides.
5. **Slowly** rotate the reel so that the same blade that you checked on the right side is crossing the bedknife approximately 25 mm (1 inch) in from the end of the bedknife on the left hand side of the cutting unit.
6. Turn the left bedbar adjuster clockwise until the shim can be slid through the reel to bedknife gap with light drag.
7. Return to the right side and adjust as necessary to get light drag on the shim between the same blade and bedknife.
8. Repeat steps 6 and 7 until the shim can be slid through both gaps with slight drag, but one click in on both

sides prevents the shim from passing through on both sides. The bedknife is now parallel to the reel.

Note: This procedure should not be needed on daily adjustments, but should be done after grinding or disassembly.

9. From this position (i.e. one click in and shim not passing through) turn the bedbar adjusters clockwise two clicks each.

   Note: Each click turned moves the bedknife 0.018 (0.0007 inches). **Do not over tighten the adjusting screws.**

10. Test the cutting performance by inserting a long strip of cutting performance paper (Toro part number 125-5610) between reel and bedknife, perpendicular to the bedknife (Figure 10). **Slowly** rotate the reel forward; it should cut the paper.

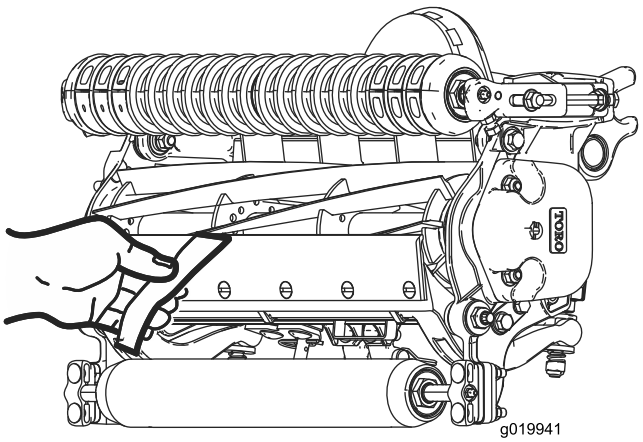

Figure 10

Note: Should excessive reel drag be evident, it will be either necessary to backlap or regrind the cutting unit to achieve the sharp edges needed for precision cutting.

Adjusting the Rear Roller

1. Adjust the rear roller brackets (Figure 11) to the desired height of cut range by positioning the required amount of spacers below the side plate mounting flange (Figure 11) per the HOC Chart.

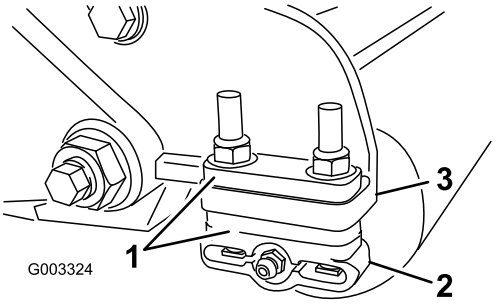

Figure 11

1. Spacer
2. Roller bracket
3. Side plate mounting flange

2. Raise rear of cutting unit and place a block under bedknife.
3. Remove (2) nuts securing each roller bracket and spacer to each side plate mounting flange.
4. Lower roller and screws from side plate mounting flanges and spacers.
5. Place spacers onto screws on roller brackets.
6. Re-secure roller bracket and spacers to underside of side plate mounting flanges with nuts previously removed.
7. Verify that bedknife to reel contact is correct. Tip mower to expose front and rear rollers and bedknife.

   Note: The position of the rear roller to the reel is controlled by the machining tolerances of the assembled components and paralleling is not required. A limited amount of adjustment is possible by setting the cutting unit on a surface plate and loosening the side plate mounting cap screws (Figure 12). Adjust and retighten cap screws. Torque the cap screws to 37-45 N-m (27-33 ft-lb).

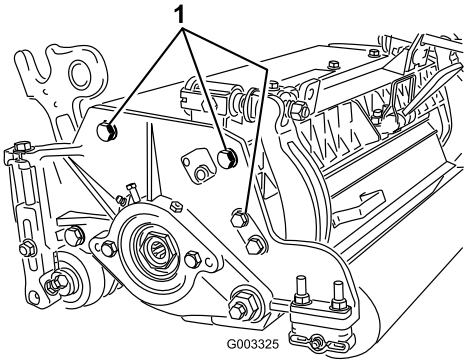

Figure 12

1. Side plate mounting cap screws

Height of Cut Chart Terms

Height of Cut Setting (HOC)

The desired Height of Cut.

Bench Set Height of Cut

The height at which the top edge of the bedknife is set above a flat level surface that contacts the bottom of both the front and rear roller.

Effective Height of Cut

This is the actual height the grass has been cut. For a given bench set height of cut, the actual height of cut will vary depending on the type of grass, time of year, turf and soil conditions. The cutting unit set up (aggressiveness of cut, rollers, bedknives, attachments installed, turf compensation settings, etc.) will also affect the effective height of cut. Check the effective height of cut using the Turf Evaluator, Model 04399 regularly to determine the desired bench set height of cut.

Aggressiveness of Cut

Cutting unit Aggressiveness of Cut has a significant impact on the performance of the cutting unit. Aggressiveness of Cut refers to the angle of the bedknife relative to the ground (Figure 13).

The best cutting unit setup is dependent on your turf conditions and desired results. Experience with the cutting unit on your turf will determine the best setting to use. Aggressiveness of cut may be adjusted throughout the cutting season to allow for various turf conditions.

In general, less to normal aggressive settings are more appropriate for warm season grasses (Bermuda, Paspalum, Zoysia) while cool season grasses (Bent, Bluegrass, Rye) may require normal to more aggressive setups. More aggressive setups cut more grass off by allowing the spinning reel to pull more grass up into the bedknife.

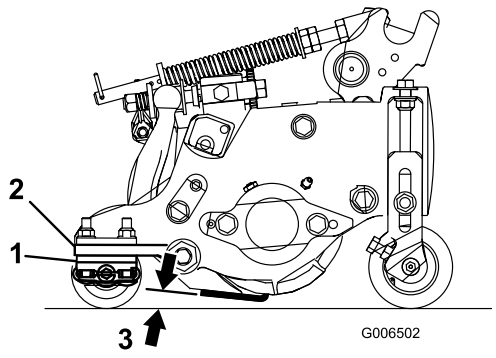

Figure 13

1. Rear spacers
2. Side plate mounting flange
3. Aggressiveness of cut

Rear Spacers

The number of rear spacers determines the aggressiveness of cut for the cutting unit. For a given height of cut, adding spacers, below the side plate mounting flange, increases the aggressiveness of the cutting unit. All cutting units on a given machine must be set to the same aggressiveness of cut (Number of rear spacers, part no. 119–0626), otherwise the after-cut appearance could be negatively affected (Figure 13).

Turf Compensation Settings

The turf compensation spring transfers the weight from the front to the rear roller. (This helps to reduce a wave pattern in the turf, also known as marcelling or bobbing.)

Important: Make spring adjustments with the cutting unit mounted to the traction unit, pointing straight ahead and lowered to the shop floor.

1. Make sure the hairpin cotter is installed in the rear hole in the spring rod (Figure 14).

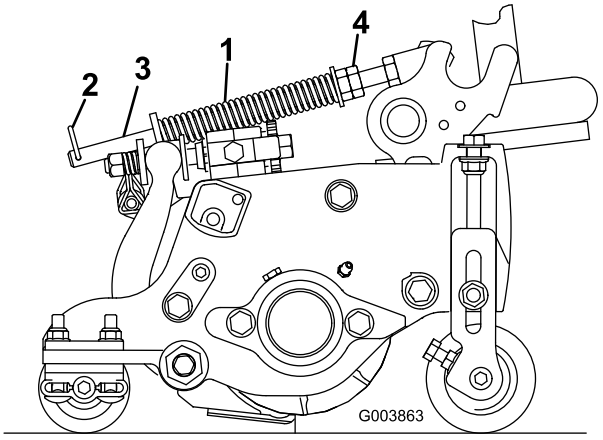

Figure 14

1. Turf compensation spring
2. Hair pin cotter
3. Spring rod
4. Hex nuts

2. Tighten the hex nuts on the front end of the spring rod until the compressed length of the spring is 12.7 cm (5 inches) (Figure 14).

   Note: When operating on rough terrain decrease the spring length by 1.3 cm (1/2 inch). Ground following will be slightly decreased.

   Note: The turf compensation setting will need to be reset if the HOC setting or the Aggressiveness of Cut setting is changed.

Chain Links

The location at which the lift arm chain is attached determines the rear roller pitch angle (Figure 15).

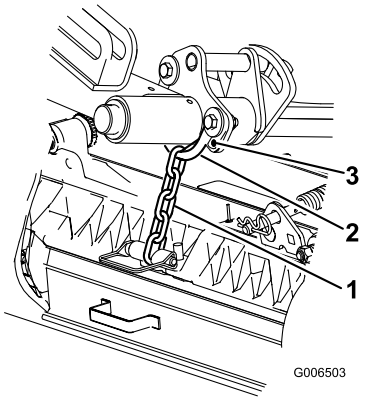

Figure 15

1. Lift chain
2. U-Bracket
3. Bottom hole

Groomer

These are the recommended height of cut settings when a groomer kit is installed on the cutting unit.

Height of Cut Chart

HOC Setting	Aggressiveness of Cut	No. of Rear Spacers	No. of Chain Links	With Groomer kits installed
0.64 cm (0.250 inches)	Less Normal More	0 0 1	3+ 3+ 3	Y Y -
0.95 cm (0.375 inches)	Less Normal More	0 1 2	4 3 3	Y Y -
1.27 cm (0.500 inches)	Less Normal More	0 1 2	4 3+ 3	Y Y Y
1.56 cm (0.625 inches)	Less Normal More	1 2 3	4 3 3	Y Y -
1.91 cm (0.750 inches)	Less Normal More	2 3 4	3+ 3 3	Y Y -
2.22 cm (0.875 inches)	Less Normal More	2 3 4	4 3 3	Y Y -
2.54 cm (1.000 inch)	Less Normal More	3 4 5	3+ 3 3	Y Y -
2.86 cm (1.125 inches)*	Less Normal More	4 5 6	4 3 3	- - -
3.18 cm (1.250 inches)*	Less Normal More	4 5 6	4 3 3	- - -
3.49 cm (1.375 inches)*	Less Normal More	4 5 6	4 3 3	- - -
3.81 cm (1.500 inches)*	Less Normal More	5 6 7	3+ 3 3	- - -

+ Indicates the U-bracket, on lift arm, is positioned in the bottom hole (Figure 15).
* High HOC Kit (Part No. 110-9600) must be installed. Front HOC bracket must be positioned in the top side plate hole.

Note: Changing one chain link will change the rear roller pitch angle movement by 7.0 degrees.

Note: Changing the U-bracket, on the lift arm, to the bottom hole will add 3.5 degrees to the rear roller pitch angle

Adjusting the Height of Cut

Note: For heights of cut greater than 2.54 cm (1.000 inch) the High Height of Cut Kit must be installed.

1. Loosen locknuts securing height-of-cut brackets to cutting unit side plates (Figure 16).

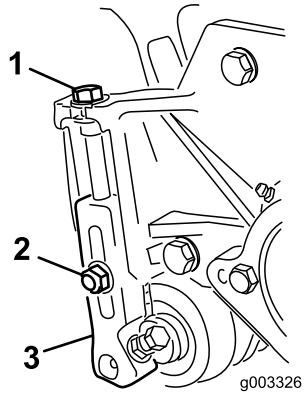

Figure 16

1. Height-of-cut bracket
2. Locknut
3. Adjusting screw

2. Loosen nut on gauge bar (Figure 17) and set adjusting screw to desired height-of-cut. Distance between bottom of screw head and face of bar is height-of-cut.

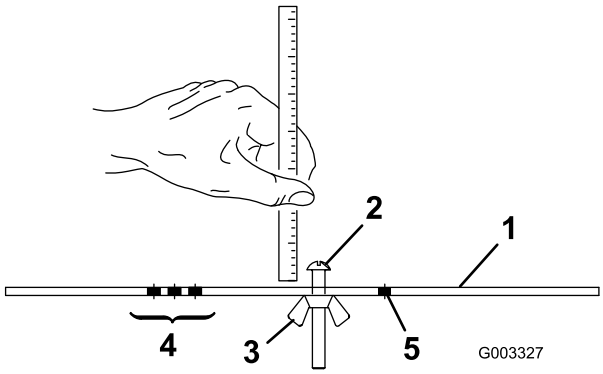

Figure 17

1. Gauge bar
2. Height adjusting screw
3. Nut
4. Holes used for setting Groomer HOG
5. Hole not used

3. Hook the screw head on cutting edge of bedknife and rest rear end of bar on rear roller (Figure 18).

4. Rotate the adjusting screw until the front roller contacts the gauge bar (Figure 18). Adjust both ends of roller until entire roller is parallel to the bedknife.

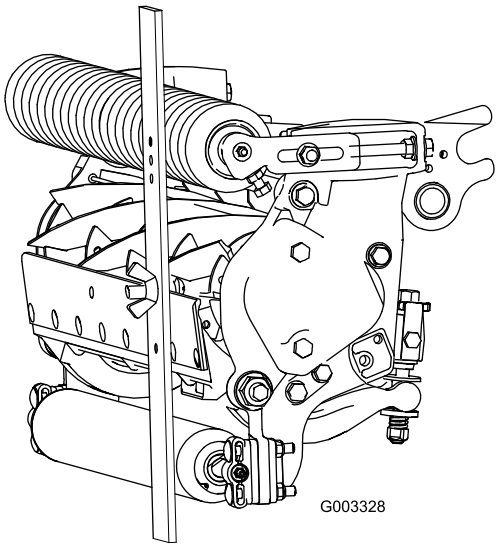

Figure 18

Important: When set properly, the rear and front rollers will contact the gauge bar and the screw will be snug against the bedknife. This ensures that the height-of-cut is identical at both ends of the bedknife.

5. Tighten nuts to secure adjustment. Do not overtighten nut. Tighten enough to remove play from washer.

Use the following chart to determine which bedknife is best suited for the desired height of cut.

Bedknife/Height of Cut Chart

Bedknife	Part No.	Bedknife Lip Height	Height of Cut
Low HOC (Optional)	110-4084	5.6 mm (.220 inch)	6.4-12.7 mm (.250-.500 inch)
Premium Low HOC (Optional)	125–2771	5.6 mm (.220 inch)	6.4-12.7 mm (.250-.500 inch)
EdgeMax® Low HOC (Optional)	127–7132	5.6 mm (.220 inch)	6.4-12.7 mm (.250-.500 inch)

Extended Low HOC (Optional)	120–1640	5.6 mm (.220 inch)	6.4-12.7 mm (.250-.500 inch)
Extended EdgeMax® Low HOC (Optional)	119–4280	5.6 mm (.220 inch)	6.4-12.7 mm (.250-.500 inch)
EdgeMax® (Production)	108-9095	6.9 mm (.270 inch)	9.5-38.1 mm (.375-1.50 inch)*
Standard (Optional)	108-9096	6.9 mm (.270 inch)	9.5-38.1 mm (.375-1.50 inch)*
Heavy Duty (Optional)	110-4074	9.3 mm (.370 inch)	12.7-38.1 mm (.500-1.50 inch)

* Warm season grasses may require the Low HOC bedknife for 12.7 mm (.500 inches) and below.

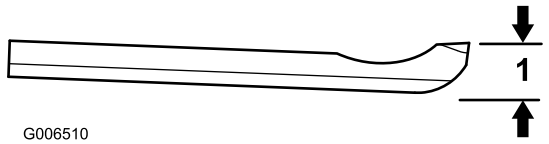

Figure 19

1. Bedknife Lip Height *

Cutting Unit Characteristics

The dual knob bedknife-to-reel adjustment system incorporated in this cutting unit simplifies the adjustment procedure needed to deliver optimum mowing performance. The precise adjustment possible with the dual knob/bedbar design gives the necessary control to provide a continual self-sharpening action-thus maintaining sharp cutting edges, ensuring good quality-of-cut, and greatly reducing the need for routine back lapping.

Daily Adjustments of Cutting Unit

Prior to mowing each day, or as required, check each cutting unit to verify proper bedknife-to-reel contact. **This must be performed even though the quality of cut is acceptable.**

1. Slowly rotate the reel in a reverse direction, listening for reel-to-bedknife contact.

   Note: The adjustment knobs have detents corresponding to 0.018 mm (0.0007 inch) bedknife movement for each indexed position. Refer to Adjusting the Bedknife to the Reel.

2. Test the cutting performance by inserting a long strip of cutting performance paper (Toro part number 125-5610) between reel and bedknife, perpendicular to the bedknife (Figure 20). Slowly rotate the reel forward; it should cut the paper.

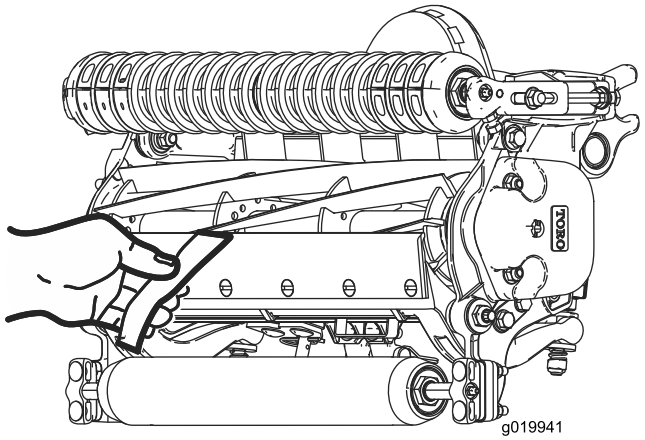

Figure 20

Note: If excessive contact/reel drag is evident it will be either necessary to backlap, reface the front of the bedknife, or regrind the cutting unit to achieve the sharp edges needed for precision cutting (Refer to the Toro Manual for Sharpening Reel and Rotary Mowers, Form No. 09168SL).

Important: Light contact is preferred at all times. If you do not maintain light contact, the bedknife and reel edges will not sufficiently self-sharpen and will dull after a period of operation. If you maintain excessive contact, the bedknife and reel will wear quicker, wear unevenly, and the quality of cut may be adversely affected.

Note: After extended running, a ridge will eventually develop at both ends of the bedknife. Round off or file these notches flush with the cutting edge of the bedknife to ensure smooth operation.

Note: Over time, the chamfer (Figure 21) will need to be reground as it is only designed to last 40% of the bedknife life.

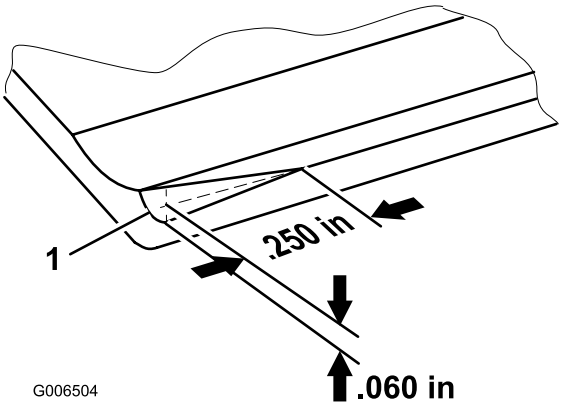

Figure 21

Note: Do not make the lead-in chamfer too large as it may cause turf tufting.

Servicing Bedknife

The bedknife service limits are listed in the following charts.

Important: Operating the cutting unit with the bedknife below the "service limit" may result in poor after-cut appearance and reduce the structural integrity of the bedknife for impacts.

Bedknife Service Limit Chart				
Bedknife	**Part No.**	**Bedknife Lip Height ***	**Service Limit ***	**Grind Angles** Top/Front Angles
Low HOC (Optional)	110-4084	5.6 mm (.220 inch)	4.8 mm (.190 inch)	5/5 Degrees
Premium Low (Optional)	125–2771	5.6 mm (.220 inch)	6.4-12.7 mm (.250-.500 inch)	10/5 Degrees
EdgeMax® Low HOC (Optional)	127–7132	5.6 mm (.220 inch)	6.4-12.7 mm (.250-.500 inch)	10/5 Degrees
Extended Low HOC (Optional)	120–1640	5.6 mm (.220 inch)	4.8 mm (.190 inch)	7/10 Degrees
Extended EdgeMax® Low HOC (Optional)	119–4280	5.6 mm (.220 inch)	4.8 mm (.190 inch)	7/10 Degrees
EdgeMax® (Production)	108-9095	6.9 mm (.270 inch)	4.8 mm (.190 inch)	5/5 Degrees
Standard (Optional)	108-9096	6.9 mm (.270 inch)	4.8 mm (.190 inch)	5/5 Degrees
Heavy Duty (Optional)	110-4074	9.3 mm (.370 inch)	4.8 mm (.190 inch)	5/5 Degrees

Recommended Top and Front Bedknife Grind Angles (Figure 22)

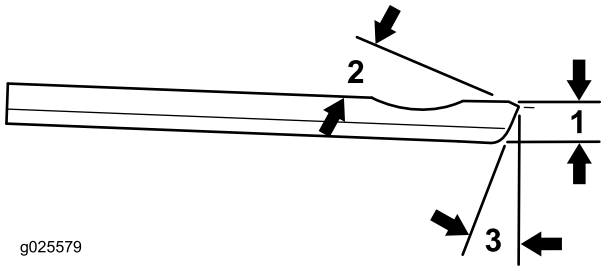

Figure 22

1. Bedknife service limit *
2. Top grind angle
3. Front grind angle

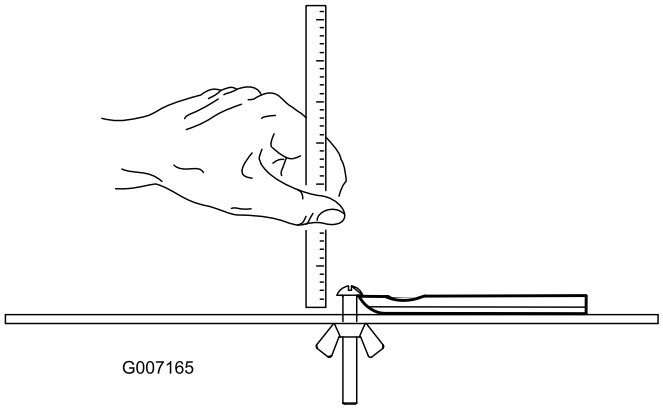

Figure 23

Note: All bedknife service limit measurements reference the bottom of the bedknife (Figure 23)

Maintenance

Lubrication

Each cutting unit has (6) grease fittings (Figure 24) that must be lubricated regularly with No. 2 General Purpose Lithium Base Grease.

The lubrication points are front roller (2), rear roller (2) and reel bearing (2).

Note: Lubricating cutting units immediately after washing helps purge water out of bearings and increases bearing life.

1. Wipe each grease fitting with a clean rag.
2. Apply grease until clean grease is seen coming out of roller seals and bearing relief valve.
3. Wipe excess grease away.

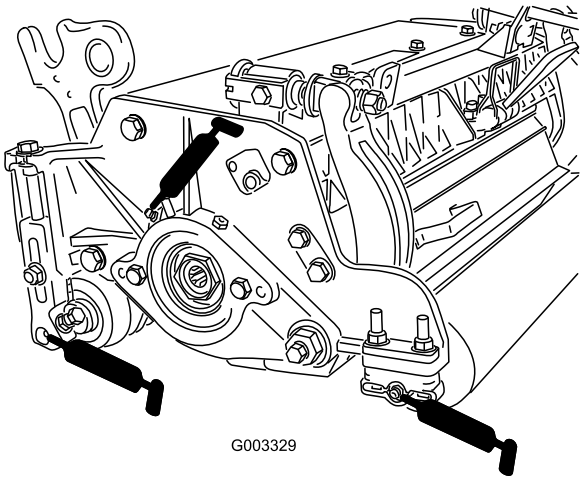

Figure 24
Grease fitting locations on left side

Adjusting the Reel Bearings

To ensure long life of the reel bearings, periodically check if reel end play exists. The reel bearings can be checked and adjusted as follows:

1. Loosen reel to bedknife contact by turning the bedknife adjusting knobs (Figure 25) counterclockwise until no contact exists.

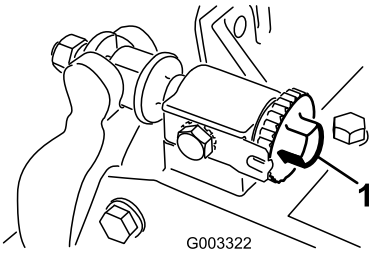

Figure 25

1. Bedknife adjusting knob

2. Using a rag or thickly padded glove, hold on to the reel blade and try to move the reel assembly side to side (Figure 26).

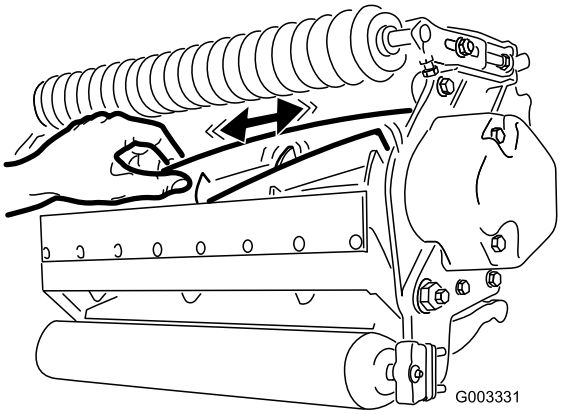

Figure 26

3. If end play exists, proceeded as follows:
   A. Loosen external set screw securing bearing adjusting nut to bearing housing located on the left side of the cutting unit (Figure 27).

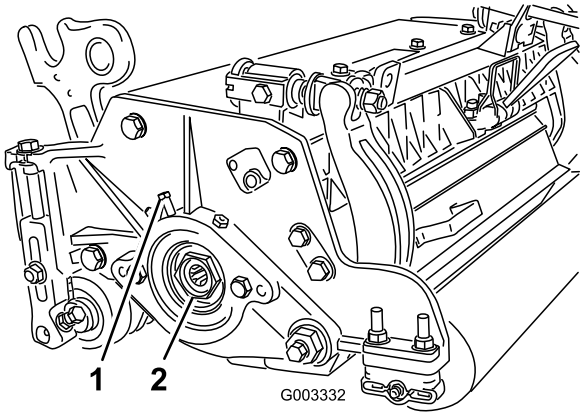

Figure 27

1. External set screw
2. Bearing adjusting nut

   B. Using a 1-3/8 inch socket wrench, slowly tighten the reel bearing adjustment nut until no end play of the reel exists. If adjusting nut does not eliminate reel end play, replace reel bearings.

Note: Reel bearings do not require preload. Over tightening reel bearing adjuster nut will damage reel bearings.

4. Retighten set screw securing bearing adjusting nut to bearing housing. Torque to 1.4-1.7 N-m (12-15 in-lb).

Servicing the Bedbar

Removing the Bedbar

1. Turn bedbar adjuster screws counterclockwise to back the bedknife away from reel (Figure 28).

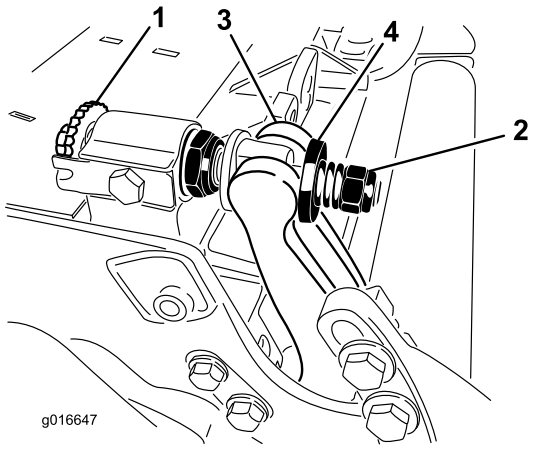

Figure 28

1. Bedbar adjusting screw
2. Spring tension nut
3. Bedbar
4. Washer

2. Back out the spring tension nut, until the washer is no longer tensioned against the bedbar (Figure 28).
3. On each side of the machine, loosen the locknut securing the bedbar bolt (Figure 29).

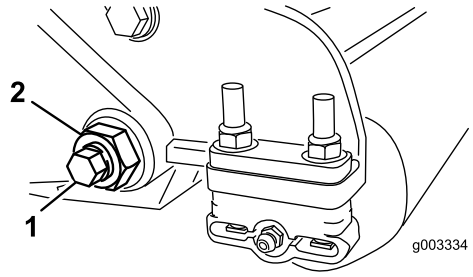

Figure 29

1. Bedbar bolt
2. Lock nut

4. Remove each bedbar bolt allowing bedbar to be pulled downward and removed from machine bolt (Figure 29). Account for 2 nylon and 1 stamped steel washers on each end of bedbar (Figure 30).

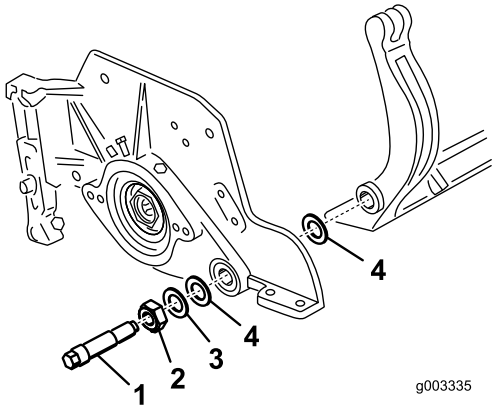

Figure 30

1. Bedbar bolt
2. Nut
3. Steel washer
4. Nylon washer

Assembling the Bedbar

1. Install bedbar, positioning mounting ears between washer and bedbar adjuster.
2. Secure bedbar to each side plate with bedbar bolts (nuts on bolts) and 6 washers. A nylon washer is to be positioned on the each side of the side plate boss. Place a steel washer outside of the outer nylon washers (Figure 30). Torque bedbar bolts to 27-36 N-m (240-320 inch-lb).
3. Tighten locknuts equally on each side until the outer steel washers cannot be rotated by hand. Then loosen the locknuts until the outer steel washers just rotate by hand, yet bedbar end play is removed. (Figure 31).

Note: Overtightening the locknuts can deflect side plates and bedbar, which can affect reel/bedknife contact.

Note: Washers on the inside may have a gap.

Note: Do not overtighten as damage to the spring may occur.

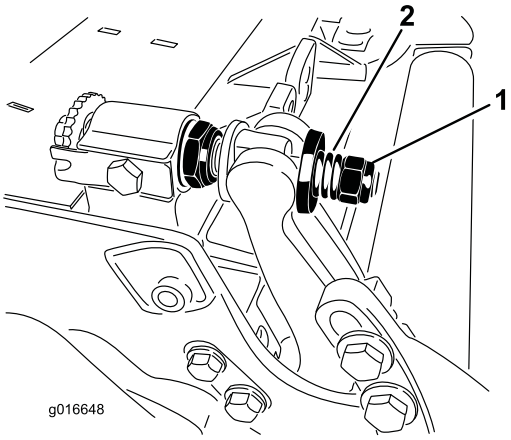

Figure 31

1. Spring tension nut
2. Spring

Servicing the HD Dual Point Adjusters (DPA)

1. Remove all parts (refer to *Installation Instructions* for HD DPA Kit Model No. 120–7230 and to Figure 32).
2. Apply Never Seize to the inside of the bushing area on cutting unit center frame (Figure 32).
3. Align the keys on flange bushings to the slots in the frame and install the bushings (Figure 32).
4. Install a wave washer onto the adjuster shaft and slide the adjuster shaft into the flange bushings in the cutting unit frame (Figure 32).
5. Secure the adjuster shaft with a flat washer and lock nut (Figure 32). Torque the lock nut to 20 to 27 N-m (15 to 20 ft-lb).

   Note: The bedbar adjuster shaft has left-hand threads.
6. Apply Never Seize lubricant to the threads of the bedbar adjuster screw that fit into the adjuster shaft. Thread bedbar adjuster screw into the adjuster shaft.
7. Loosely install the hardened washer, spring and spring tension nut onto adjuster screw.
8. Install the bedbar, positioning the mounting ears between washer and bedbar adjuster.
9. Secure the bedbar to each side plate with the bedbar bolts (nuts on bolts) and 6 washers. A nylon washer is to be positioned on each side of side plate boss. Place a steel washer outside each of the nylon washers (Figure 32). Torque bedbar bolts to 37-45 N-m (27-33 ft.-lb). Tighten locknuts until the outside steel washer stops rotating and end play is removed but do not overtighten or deflect side plates. Washers on inside may have a gap (Figure 30).
10. Tighten the nut on each bedbar adjuster assembly until the compression spring is fully compressed, then loosen nut 1/2 turn (Figure 31).
11. Repeat the procedure on the other end of the cutting unit.
12. Adjust the bedknife to the reel.

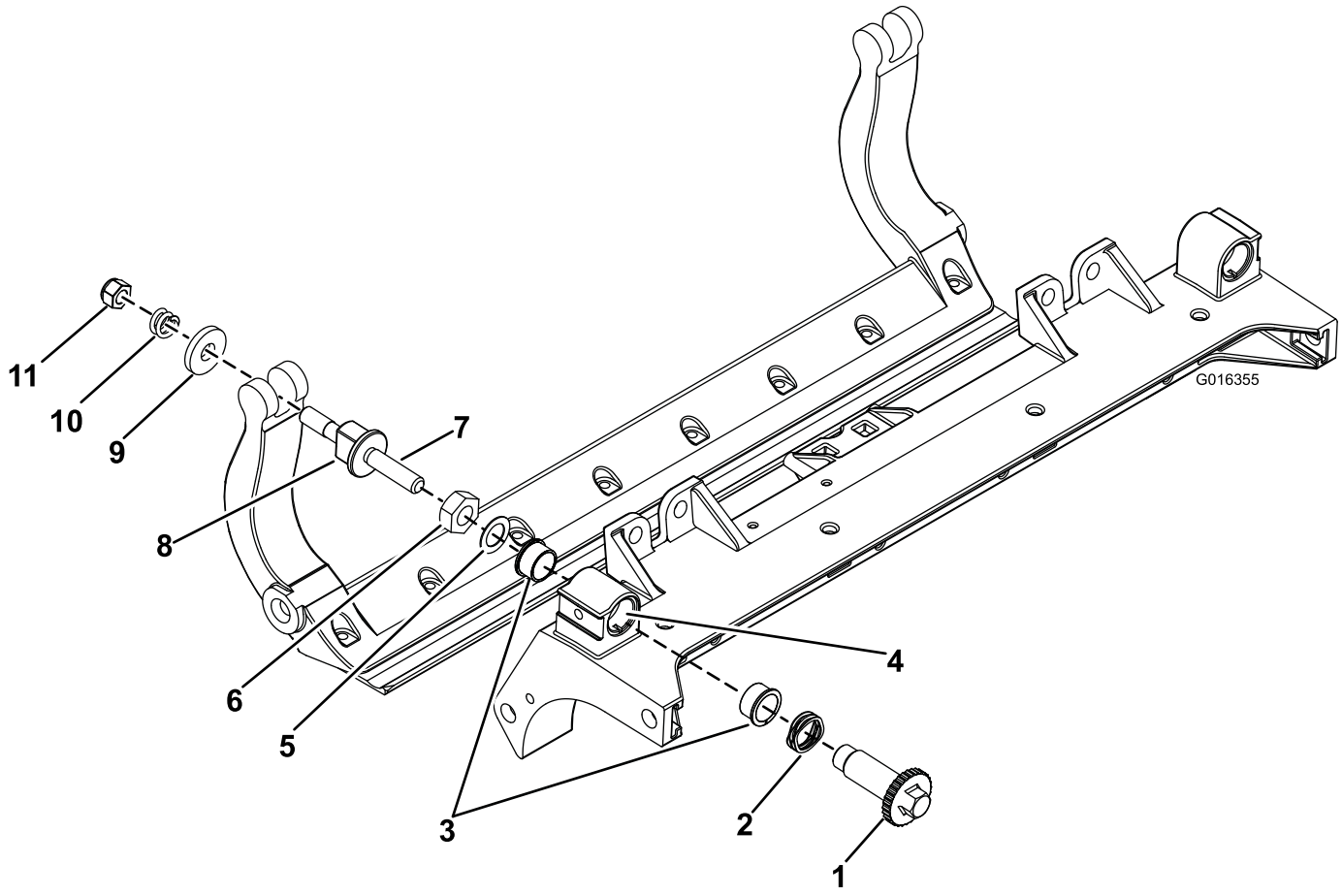

Figure 32

1. Shaft adjuster
2. Wave washer
3. Flange bushing
4. Apply Never Seize here
5. Flat washer
6. Lock nut
7. Apply Never Seize here
8. Bedbar adjuster screw
9. Hardened washer
10. Compression spring
11. Spring tension nut

Servicing the Roller

A Roller Rebuild Kit, Part No. 114–5430 and a Roller Rebuild Tool Kit, Part No. 115–0803 (Figure 33) are available for servicing the roller. The Roller Rebuild Kit includes all the bearings, bearing nuts, inner seals and outer seals to rebuild a roller.
The Roller Rebuild Tool Kit includes all the tools and the installation instructions required to rebuild a roller with the roller rebuild kit. Refer to your parts catalog or contact your distributor for assistance.

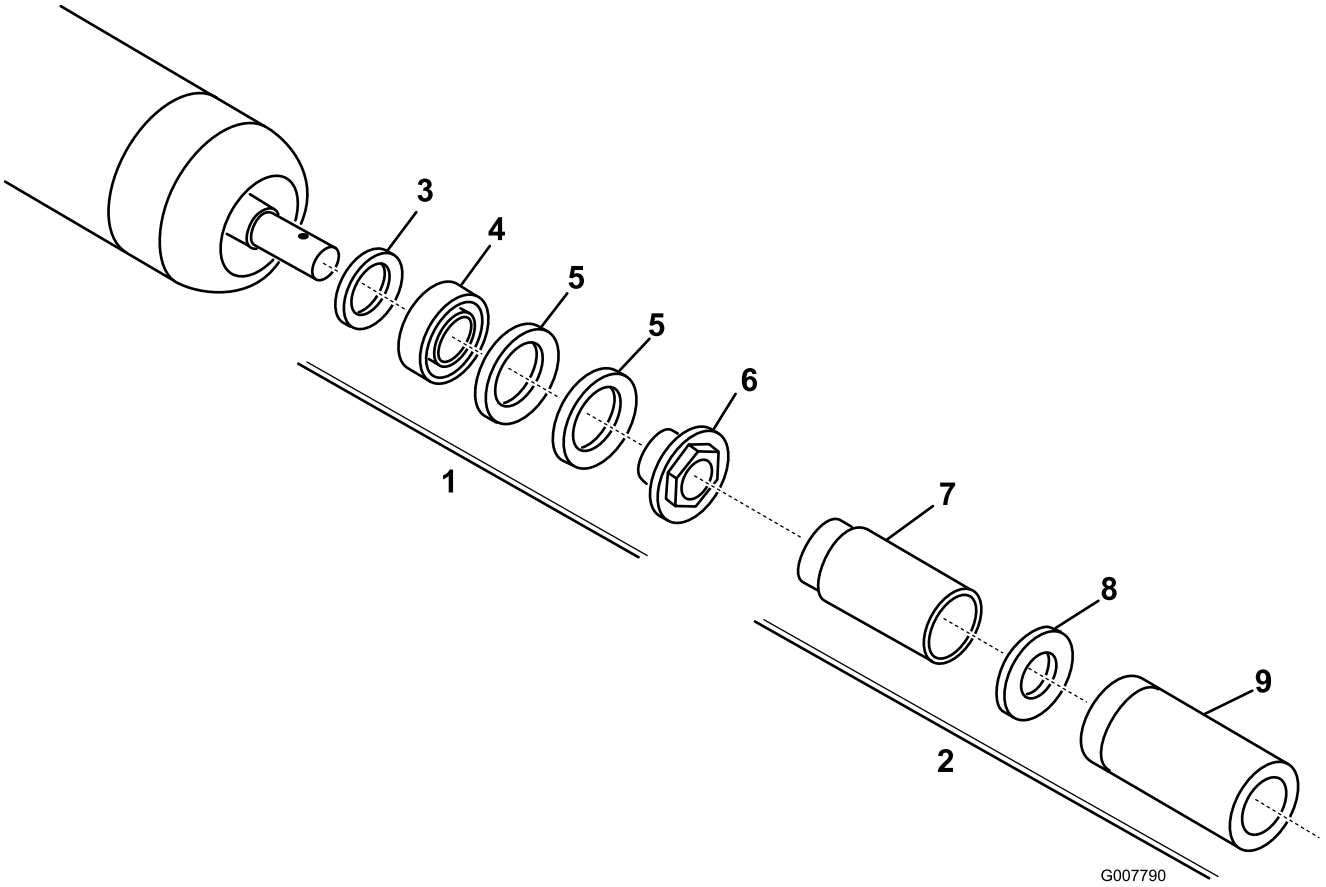

Figure 33

1. Rebuild kit (Part No. 114–5430)
2. Rebuild tool kit (Part No. 115–0803)
3. Inner seal
4. Bearing
5. Outer seal
6. Bearing nut
7. Inner seal tool
8. Washer
9. Bearing/outer seal tool

Notes:

Notes:

Notes:

Declaration of Incorporation

The Toro Company, 8111 Lyndale Ave. South, Bloomington, MN, USA declares that the following unit(s) conform(s) to the directives listed, when installed in accordance with the accompanying instructions onto certain Toro models as indicated on the relevant Declarations of Conformity.

Model No.	Serial No.	Product Description	Invoice Description	General Description	Directive
03694	313000001 and Up	8-Blade DPA Cutting Unit with 5in Reel, Reelmaster 5210/5410 Series Traction Unit	5in-8 BLADE DPA-RADIAL	Cutting Unit	2000/14/EC 2006/42/EC
03695	313000001 and Up	11-Blade DPA Cutting Unit with 5in Reel, Reelmaster 5210/5410 Series Traction Unit	5in-11 BLADE DPA-RADIAL	Cutting Unit	2000/14/EC 2006/42/EC

Relevant technical documentation has been compiled as required per Part B of Annex VII of 2006/42/EC.

We will undertake to transmit, in response to requests by national authorities, relevant information on this partly completed machinery. The method of transmission shall be electronic transmittal.

This machinery shall not be put into service until incorporated into approved Toro models as indicated on the associated Declaration of Conformity and in accordance with all instructions, whereby it can be declared in conformity with all relevant Directives.

Certified:



David Klis
Sr. Engineering Manager
8111 Lyndale Ave. South
Bloomington, MN 55420, USA
May 29, 2012

EU Technical Contact:

Peter Tetteroo
Toro Europe NV
B-2260 Oevel-Westerloo
Belgium

Tel. 0032 14 562960
Fax 0032 14 581911

The Toro Total Coverage Guarantee

A Limited Warranty

Conditions and Products Covered

The Toro Company and its affiliate, Toro Warranty Company, pursuant to an agreement between them, jointly warrant your Toro Commercial product ("Product") to be free from defects in materials or workmanship for two years or 1500 operational hours*, whichever occurs first. This warranty is applicable to all products with the exception of Aerators (refer to separate warranty statements for these products). Where a warrantable condition exists, we will repair the Product at no cost to you including diagnostics, labor, parts, and transportation. This warranty begins on the date the Product is delivered to the original retail purchaser.
* Product equipped with an hour meter.

Instructions for Obtaining Warranty Service

You are responsible for notifying the Commercial Products Distributor or Authorized Commercial Products Dealer from whom you purchased the Product as soon as you believe a warrantable condition exists. If you need help locating a Commercial Products Distributor or Authorized Dealer, or if you have questions regarding your warranty rights or responsibilities, you may contact us at:

Toro Commercial Products Service Department
Toro Warranty Company
8111 Lyndale Avenue South
Bloomington, MN 55420-1196

952–888–8801 or 800–952–2740
E-mail: commercial.warranty@toro.com

Owner Responsibilities

As the Product owner, you are responsible for required maintenance and adjustments stated in your *Operator's Manual*. Failure to perform required maintenance and adjustments can be grounds for disallowing a warranty claim.

Items and Conditions Not Covered

Not all product failures or malfunctions that occur during the warranty period are defects in materials or workmanship. This warranty does not cover the following:

- Product failures which result from the use of non-Toro replacement parts, or from installation and use of add-on, or modified non-Toro branded accessories and products. A separate warranty may be provided by the manufacturer of these items.
- Product failures which result from failure to perform recommended maintenance and/or adjustments. Failure to properly maintain your Toro product per the Recommended Maintenance listed in the *Operator's Manual* can result in claims for warranty being denied.
- Product failures which result from operating the Product in an abusive, negligent, or reckless manner.
- Parts subject to consumption through use unless found to be defective. Examples of parts which are consumed, or used up, during normal Product operation include, but are not limited to, brake pads and linings, clutch linings, blades, reels, rollers and bearings (sealed or greasable), bed knives, spark plugs, castor wheels and bearings, tires, filters, belts, and certain sprayer components such as diaphragms, nozzles, and check valves, etc.
- Failures caused by outside influence. Conditions considered to be outside influence include, but are not limited to, weather, storage practices, contamination, use of unapproved fuels, coolants, lubricants, additives, fertilizers, water, or chemicals, etc.
- Failure or performance issues due to the use of fuels (e.g. gasoline, diesel, or biodiesel) that do not conform to their respective industry standards.
- Normal noise, vibration, wear and tear, and deterioration.
- Normal "wear and tear" includes, but is not limited to, damage to seats due to wear or abrasion, worn painted surfaces, scratched decals or windows, etc.

Parts

Parts scheduled for replacement as required maintenance are warranted for the period of time up to the scheduled replacement time for that part. Parts replaced under this warranty are covered for the duration of the original product warranty and become the property of Toro. Toro will make the final decision whether to repair any existing part or assembly or replace it. Toro may use remanufactured parts for warranty repairs.

Deep Cycle and Lithium-Ion Battery Warranty:

Deep cycle and Lithium-Ion batteries have a specified total number of kilowatt-hours they can deliver during their lifetime. Operating, recharging, and maintenance techniques can extend or reduce total battery life. As the batteries in this product are consumed, the amount of useful work between charging intervals will slowly decrease until the battery is completely worn out. Replacement of worn out batteries, due to normal consumption, is the responsibility of the product owner. Battery replacement may be required during the normal product warranty period at owner's expense. Note: (Lithium-Ion battery only): A Lithium-Ion battery has a part only prorated warranty beginning year 3 through year 5 based on the time in service and kilowatt hours used. Refer to the *Operator's Manual* for additional information.

Maintenance is at Owner's Expense

Engine tune-up, lubrication, cleaning and polishing, replacement of filters, coolant, and completing recommended maintenance are some of the normal services Toro products require that are at the owner's expense.

General Conditions

Repair by an Authorized Toro Distributor or Dealer is your sole remedy under this warranty.

Neither The Toro Company nor Toro Warranty Company is liable for indirect, incidental or consequential damages in connection with the use of the Toro Products covered by this warranty, including any cost or expense of providing substitute equipment or service during reasonable periods of malfunction or non-use pending completion of repairs under this warranty. Except for the Emissions warranty referenced below, if applicable, there is no other express warranty. All implied warranties of merchantability and fitness for use are limited to the duration of this express warranty.

Some states do not allow exclusions of incidental or consequential damages, or limitations on how long an implied warranty lasts, so the above exclusions and limitations may not apply to you. This warranty gives you specific legal rights, and you may also have other rights which vary from state to state.

Note regarding engine warranty:

The Emissions Control System on your Product may be covered by a separate warranty meeting requirements established by the U.S. Environmental Protection Agency (EPA) and/or the California Air Resources Board (CARB). The hour limitations set forth above do not apply to the Emissions Control System Warranty. Refer to the Engine Emission Control Warranty Statement supplied with your product or contained in the engine manufacturer's documentation for details

Countries Other than the United States or Canada

Customers who have purchased Toro products exported from the United States or Canada should contact their Toro Distributor (Dealer) to obtain guarantee policies for your country, province, or state. If for any reason you are dissatisfied with your Distributor's service or have difficulty obtaining guarantee information, contact the Toro importer.

374-0253 Rev B