Form No. 3389-239 Rev A

TORO®

Count on it.

Operator's Manual

Versa Vac

Model No. 07053—Serial No. 315000001 and Up

Register at www.Toro.com.
Original Instructions (EN)

CE

3389-239 A

This product complies with all relevant European directives. For details, please see the separate product specific Declaration of Conformity (DOC) sheet.

⚠ WARNING

CALIFORNIA
Proposition 65 Warning

This product contains a chemical or chemicals known to the State of California to cause cancer, birth defects, or reproductive harm.

Introduction

The Versa Vac is to be used in conjunction with the combination deck or finger deck. The machine is intended to be used by professional, hired operators in commercial applications. The primary function of the machine is to facilitate verticutting, dethatching, renovation and debris removal from large turf areas in one pass.

Read this information carefully to learn how to operate and maintain your product properly and to avoid injury and product damage. You are responsible for operating the product properly and safely.

You may contact Toro directly at www.Toro.com for product and accessory information, help finding a dealer, or to register your product.

Whenever you need service, genuine Toro parts, or additional information, contact an Authorized Service Dealer or Toro Customer Service and have the model and serial numbers of your product ready. The 2 numbers are stamped on a plate which is located on the frame.

Model No. _____

Serial No. _____

This manual identifies potential hazards and has safety messages identified by the safety alert symbol (Figure 1), which signals a hazard that may cause serious injury or death if you do not follow the recommended precautions.



Figure 1

1. Safety alert symbol

This manual uses 2 words to highlight information. **Important** calls attention to special mechanical information and **Note** emphasizes general information worthy of special attention.

Contents

Safety 3
- Before Operating 3
- While Operating 3
- While Dumping 4
- Maintenance 4
- Safety and Instructional Decals 4

Setup 8
- 1 Configuring the Machine to the Tractor 8
- 2 Adjusting the PTO Shaft Length 9
- 3 Connecting the PTO Shaft 10
- 4 Greasing the Machine 10

Product Overview 10
- Controls 10

Operation 11
- Checking the Hydraulic Fluid 11
- Checking the Tire Pressure 12
- Checking the Torque of the Wheel Nuts 12
- Connecting the Machine to the Tractor 12
- Connecting the PTO Shaft 12
- Removing the Machine from the Tractor 13
- Operating the Tractor Hydraulics 13
- Operating the Machine 13
- Transporting the Machine 14

Maintenance 15
- Recommended Maintenance Schedule(s) 15
- Lubricating the Machine 15
- Checking the Hydraulic Lines and Hoses 15
- Servicing the Hydraulic Fluid and Filter 16

Storage 18

© 2014—The Toro® Company

8111 Lyndale Avenue South
Bloomington, MN 55420

Contact us at www.Toro.com.
Printed in the USA.
All Rights Reserved

Safety

Hazard control and accident prevention depend upon the awareness, concern, and proper training of the personnel involved in the operation, transport, maintenance, and storage of the machine. Improper use or maintenance of the machine can result in injury or death. To reduce the potential for injury or death, comply with the following safety instructions.

Before Operating

- Because the machine must be towed to operate, it is extremely important to carefully select the tow tractor to ensure the best performance and safe operation.
- The tow tractor must have the proper wheel base and tread width and be equipped with a roll bar and seat belt to operate safely on hilly terrain. The normal operating speed is 10 km/h (6 mph) but will vary with terrain and debris being picked up. The maximum transport speed is 24 km/h (15 mph) with slower speeds required on hilly terrain. Refer to the tractor *Operator's Manual* for information or tractor service agency if you have any questions on safe operation.
- The brakes of the tow tractor must have the capacity to stop the machine with trailer fully loaded and traveling at the maximum recommended transport speed.
- The power take-off drive of the machine requires a tractor with operating speeds of 540 rpm and output power of 32 hp or higher. Do not exceed the 540 rpm speed.
- The machine must comply with local road requirements if transported on public roads. A slow-moving vehicle sign has been provided. Signal lights and brakes are not provided and may be required in some areas.
- Read and understand the contents of this *Operator's Manual* before operating the machine. Become familiar with all of the controls and know how to stop quickly.
- Never allow children to operate the machine. Do not allow adults to operate the machine without proper instruction. Only trained operators who have read this manual should operate this machine.
- Keep all bystanders away from the operating area.
- Keep all shields and safety devices in place. If a shield, safety device, or decal is illegible or damaged, repair or replace it before operation. Also tighten any loose nuts, bolts, and screws to ensure that the machine is in safe operating condition.
- Do not operate the machine while wearing sandals, tennis shoes, sneakers, or shorts. Also, do not wear loose fitting clothing, which could get caught in moving parts. Always wear long pants and substantial shoes. Wearing safety glasses, safety shoes, and a helmet is advisable and required by some local ordinances and insurance regulations.

While Operating

- This product may exceed noise levels of 85 dB(A) at the operator position. Hearing protection is recommended for prolonged exposure to reduce the potential of permanent hearing damage.
- Using the machine demands attention. To prevent loss of control:
  - Operate only in daylight or when there is good artificial light.
  - Drive slowly and watch for holes or other hidden hazards.
  - Do not drive close to a sand trap, ditch, creek, embankment, or other hazard.
  - Reduce your speed when making sharp turns and when turning on hillsides.
  - Avoid sudden starts and stops.
  - Before backing up, look to the rear and ensure that no one is behind the machine.
  - Watch out for traffic when near or crossing roads. Always yield the right-of-way.
- The brush, rubber fingers, flail, and vacuum of the machine pick up and propel debris and small objects in its path during operation. Always wear eye and head protection to avoid possible injury from flying objects, and keep children, pets, and bystanders well away from the area of operation.
- Never carry passengers on the tractor or allow anyone to ride in the trailer.
- Never operate the machine when under the influence of drugs or alcohol.
- Lightning can cause severe injury or death. If lightning is seen or thunder is heard in the area, do not operate the machine; seek shelter.
- Do not step over the PTO shaft to get to the other side of the machine. Walk around the trailer.
- Never get on or off the tractor with the PTO shaft engaged.
- Empty the trailer, park on a level surface, and block wheels before removing the machine from the prime mover.
- If the engine stalls or the machine loses headway and cannot make it to the top of a slope, do not turn the machine around. Always back slowly straight down the slope.
- When a person or pet appears unexpectedly in or near the operating area, **stop operation.** Careless operation, combined with terrain angles, ricochets, or improperly positioned guards can lead to thrown-object injuries. Do not resume operation until the area is cleared.

While Dumping

- Moving the trailer door and dumping debris can cause serious injury. Stay clear of the trailer while the machine is backing up or dumping.
- Keep bystanders a safe distance from the trailer when operating to dump debris or when opening and closing the trailer door.
- Under rare circumstances wet, compressed grass clippings may generate heat. Always empty the trailer before storing the unit.
- Raising and lowering the trailer door could cause injury to bystanders or pets. Keep bystanders and pets a safe distance from trailer when operating to dump debris and when opening and closing the trailer door.
- To avoid the risk of electrical shock, dump the trailer only in areas that are clear of overhead wires and other obstructions.
- **Never** dump the trailer on a slope; always dump the trailer on level ground.

Maintenance

- Remove the key from the ignition switch to prevent accidental starting of the engine when servicing, adjusting, or storing the machine.
- Perform only those maintenance instructions described in this manual. If major repairs are ever needed or assistance is desired, contact an Authorized Toro Distributor.
- Be sure that the machine is in safe operating condition by keeping nuts, bolts, and screws tight. Check all bolts and nuts frequently to be sure that they are tightened to specification.
- To ensure optimum performance and safety, always purchase genuine Toro replacement parts and accessories. **Never use "will-fit" replacement parts and accessories made by other manufacturers.** Look for the Toro logo to ensure genuineness. Using unapproved replacement parts and accessories could void the warranty.

Safety and Instructional Decals

Safety decals and instructions are easily visible to the operator and are located near any area of potential danger. Replace any decal that is damaged or lost.

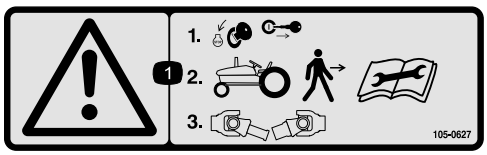

105-0627

1. Warning—stop the engine and remove the ignition key before getting off of the tractor; read the instructions before servicing or performing maintenance, then disconnect the PTO shaft.

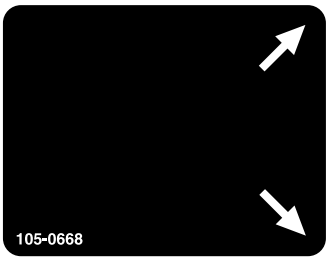

105-0668

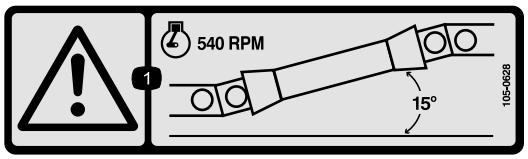

105-0628

1. Warning—run the engine at no more than 540 rpm and keep the PTO shaft angle under 15 degrees.

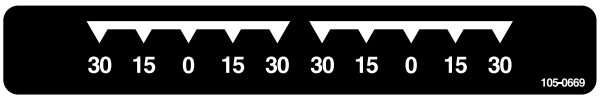

105-0669

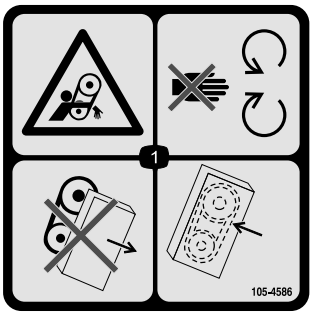

105-4586

1. Entanglement hazard, belt—stay away from moving parts. Do not operate the machine with the shields or guards removed; keep the shields and guards in place.



105-0707

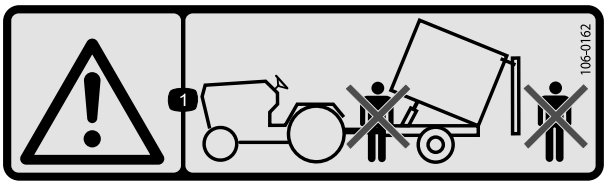

106-0162

1. Warning—do not stand in front of or behind the trailer when dumping.

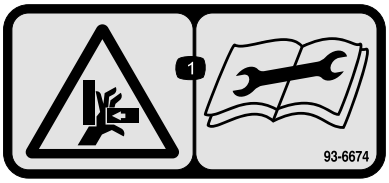

93-6674

1. Crushing hazard, hand—read the instructions before servicing or performing maintenance.

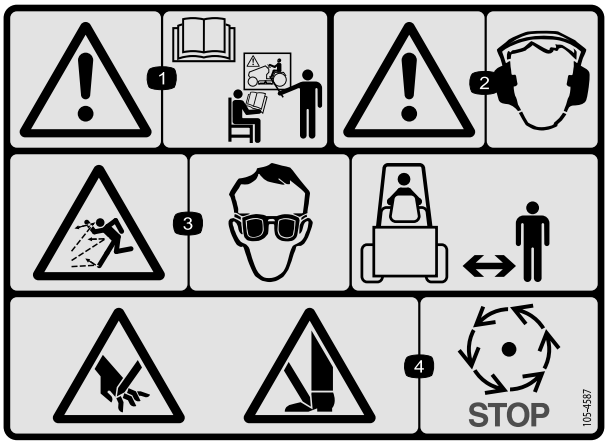

105-4587

1. Warning—read the *Operator's Manual* and receive training before operating the machine.
2. Warning—wear hearing protection.
3. Thrown object hazard—wear eye protection; keep bystanders a safe distance from the machine.
4. Cutting hazard of hand or foot—wait for moving parts to stop.

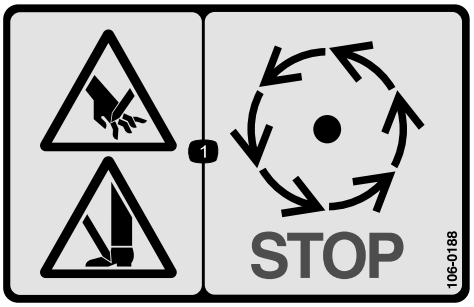

106-0188

1. Cutting hazard of hand or foot—wait for moving parts to stop.



106-0163

1. Warning—read the *Operator's Manual* and receive training before operating the machine; the maximum load is 612 kg (1350 lb) trailer weight and 385 kg (850 lb) tongue weight; do not drive the machine and trailer down hill or you may lose control.
2. Crushing hazard, trailer—do not carry passengers.
3. Warning—do not exceed 24 km/h (15 mph).
4. Stored energy hazard, trailer—do not disconnect the trailer without first putting down the jack.

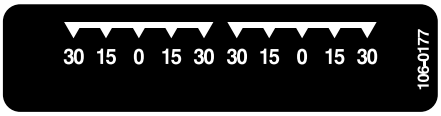

106-0177



106-0178



110-7506

1. Warning—read the *Operator's Manual* and receive training; before operating the combination deck flail.

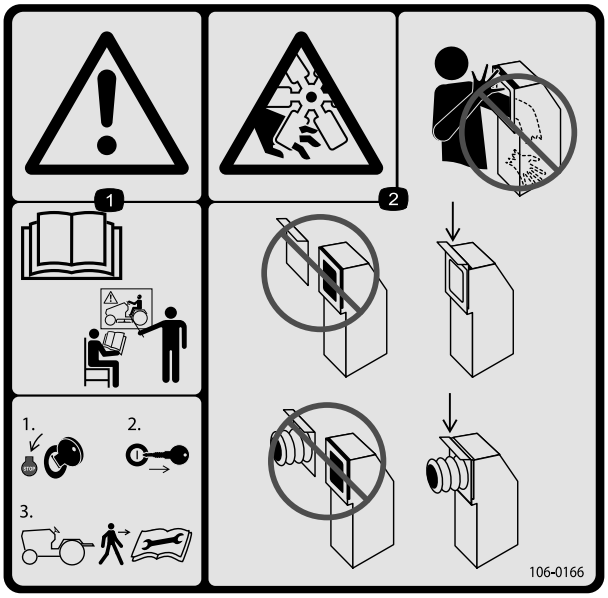

106-0166

1. Warning—read the and receive training before operating the machine; stop the engine and remove the ignition key before getting off of the tractor; read the *Operator's Manual* before servicing or performing maintenance.
2. Cutting/dismemberment hazard of hand, fan—do not place your hand or arm in the vacuum chute; keep the hose door or hose installed at all times.

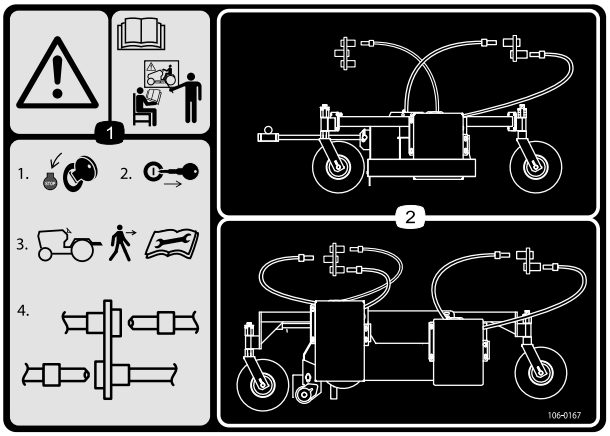

106-0167

1. Warning—read the and receive training before operating the machine; 1) Stop the engine; 2) Remove the ignition key before getting off of the tractor; 3) read the *Operator's Manual* before servicing or performing maintenance; 4) Connect or disconnect the hydraulic hoses.
2. Hydraulic hose routing and connections.

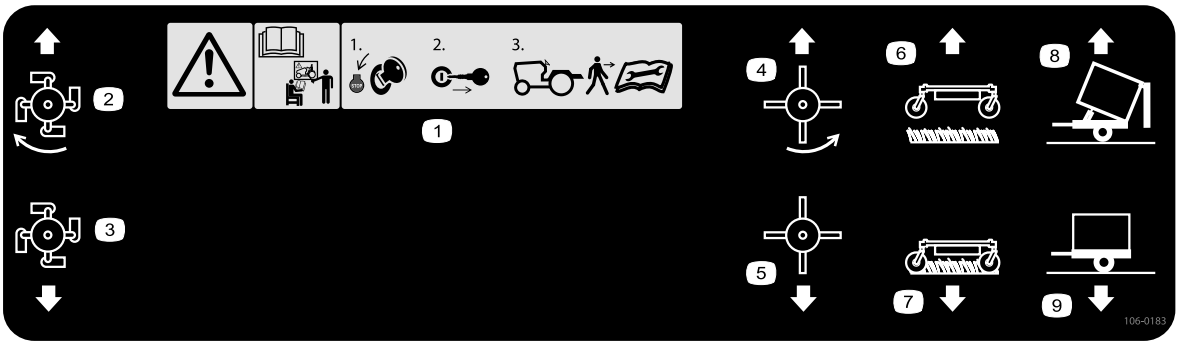

106-0183

1. Warning—read the and receive training before operating the machine; 1) Stop the engine and remove the ignition key before getting off of the tractor; 2) Read the *Operator's Manual* before servicing or performing maintenance.
2. Flail on
3. Flail off
4. Rubber fingers on
5. Rubber fingers off
6. Vacuum unit up
7. Vacuum unit down
8. Trailer dump
9. Trailer upright

Setup

Loose Parts

Use the chart below to verify that all parts have been shipped.

Procedure	Description	Qty.	Use
1	Jack	1	Configure the machine to the tractor.
2	PTO shaft	1	Adjust the PTO shaft length.
3	No parts required	–	Connect the PTO shaft.
4	No parts required	–	Grease the machine.

Media and Additional Parts

Description	Qty.	Use
Auxiliary control lever	1	Install the control lever only if the combination deck is installed.
Operator's Manual Parts Catalog	1 1	Read before operating the machine.
Declaration of Conformity	1	Use for CE compliance.

⚠ CAUTION

Without the proper amount of ballast in the tires, the tractor may become unstable and cause bodily injury.

Make sure that the front of the tractor is equipped with the proper amount of ballast; refer to the tractor operator's manual for ballast requirements.

1

Configuring the Machine to the Tractor

Parts needed for this procedure:

1	Jack

Procedure

1. Position the machine on a flat, level surface.
2. Insert the jack onto the frame pin and secure it with the pin (Figure 2).

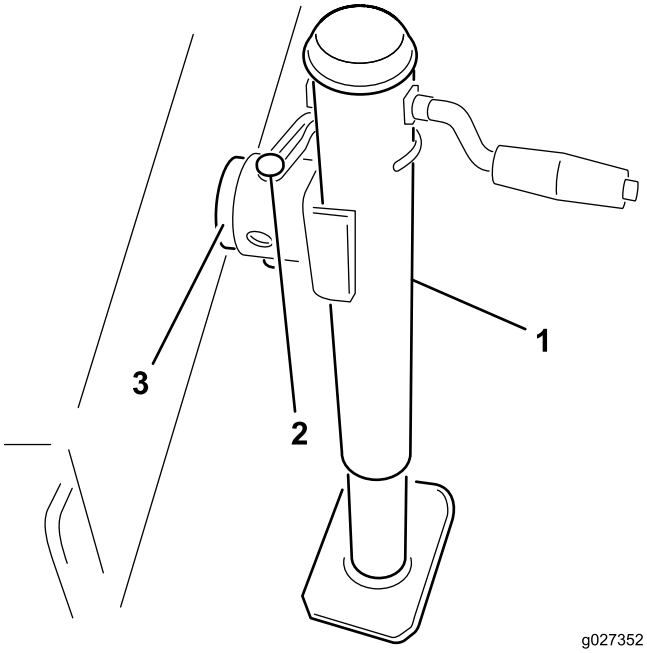

Figure 2

1. Jack
2. Pin
3. Frame pin

3. Adjust the jack height until the machine frame is parallel with the ground.
4. Back the tractor up to the machine.

5. Adjust the machine hitch clevis to the same level as the tractor hitch as follows:
   A. Remove the bolts and locknuts that secure the hitch clevis (Figure 3) to the machine frame.

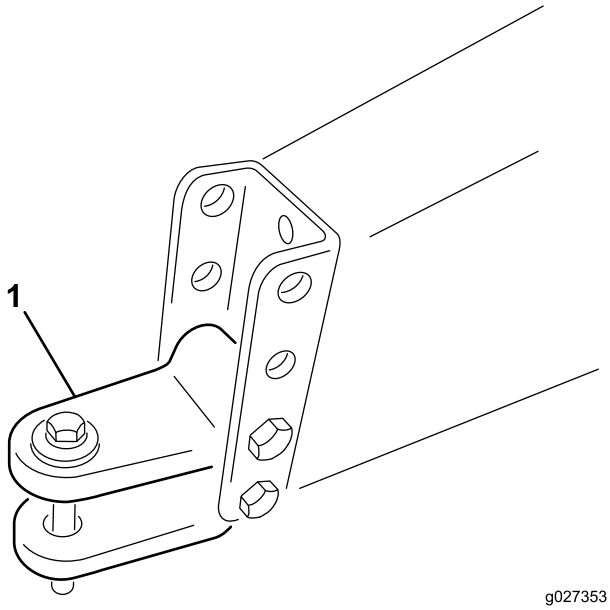

Figure 3

1. Clevis hitch

   B. Raise or lower the hitch clevis to the position approximately level with the tractor hitch.
   C. Secure it with the bolts and locknuts that were previously removed.
6. Connect the tractor hitch to the machine clevis hitch with the hitch pin and clevis.
7. Remove the jack pin, rotate the jack upward to the storage position.

2

Adjusting the PTO Shaft Length

Parts needed for this procedure:

1	PTO shaft

Procedure

A long PTO shaft is supplied with the machine to accommodate large variations in the tractor's PTO. For most tractors, this shaft is too long and must be cut to the correct length or damage may result.

1. Measure the distance from the lock groove of the tractor PTO shaft to the lock groove of the machine impeller input shaft.

   Note: Record this dimension.
2. Fully collapse the PTO shaft and measure the distance between the lock pin collars.

   Note: Record this dimension.
3. At its shortest length, the 2 halves of the PTO shaft must have at least 37 mm (1-1/2 inches) of additional clearance to collapse (Figure 4).

   Note: If the dimension in Step 1 is not at least 37 mm (1-1/2 inches) greater than the dimension in Step 2, the PTO shaft is too long; proceed to step 4. If there is enough clearance to allow the PTO shaft to collapse, proceed to Step 9.

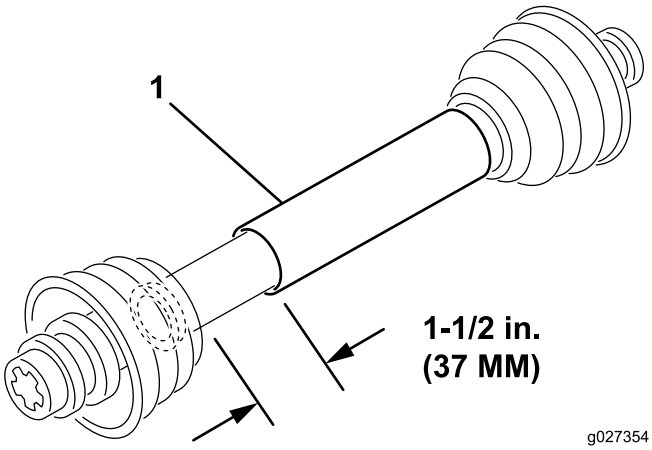

Figure 4

1. PTO shaft

4. Use the following calculation to establish how much shorter the shaft must be, when connected, to ensure a clearance of 37 (1-1/2 inches):
   A. Subtract the dimension recorded in Step 2 from the dimension recorded in Step 1.

      Note: Record this dimension.
   B. Subtract the result in Step A from 37 mm (1-1/2 inches).

      Note: The PTO shaft must be shortened by this amount.
5. Using a hacksaw, shorten the guards and the steel tubes by the calculated length.

   Note: Cut both halves of the PTO shaft.
6. Deburr the ends of the steel tubes internally and externally.
7. Remove all debris from the tube sections.
8. Grease the steel tubes liberally.
9. Assemble the PTO shaft and secure it to the machine and tractor.

10. Measure the shaft.

Note: If it is not at least 37 mm (1-1/2 inches), repeat the procedure.

3

Connecting the PTO Shaft

No Parts Required

Procedure

Connect the PTO shaft; refer to Connecting the PTO Shaft (page 12)

4

Greasing the Machine

No Parts Required

Procedure

Grease the machine; refer to Lubricating the Machine (page 15)

Product Overview

Controls

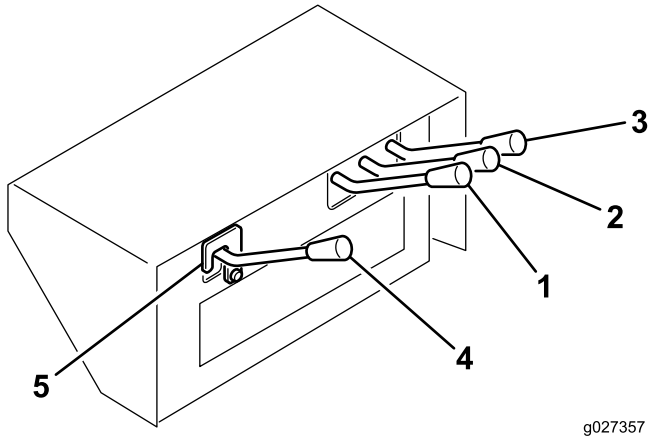

Figure 5

1. Brush control
2. Deck lift control
3. Trailer lift control
4. Auxiliary control
5. Safety latch

Trailer Lift Control

Used to dump the trailer box (Figure 5). The up position raises the box and opens the door, and the down position lowers the box and closes the door.

Deck Lift Control

Used to raise and lower the primary deck (Figure 5). The up position raises the deck, and the down position lowers the deck.

Brush Control

Used to operate the rotating finger deck (sold separately). The up position starts the deck, and the down position stops the deck (Figure 5).

Auxiliary Control

Used to operate the combination deck (sold separately). The up position starts the deck, and the down position stops the deck (Figure 5).

Important: The auxiliary control lever is shipped loose to prevent accidental engagement of the unused hydraulic circuit. Do not install or operate the auxiliary control lever unless the combination deck is installed.

To install the auxiliary control lever, complete the following procedure:

1. Remove the control lever cover.
2. Remove the 2 cotter pins from the control valve spool.
3. Mount the auxiliary control lever to the valve spool with the cotter pins.

4. Install the control lever cover.

Safety Latch

Only remove the safety latch when operating the combination deck (Figure 5).

Tractor PTO

The vacuum fan on the machine will run as soon as the PTO is engaged (Figure 5). The finger and combination decks are engaged by the hydraulic controls on the machine.

Important: Always engage the tractor PTO gently at a low engine speed. Sudden engagement of the tractor PTO at a high engine speed will likely cause damage to the drive line components.

Operation

Note: Determine the left and right sides of the machine from the normal operating position.

⚠ CAUTION

If you leave the key in the ignition switch, someone could accidently start the engine and seriously injure you or other bystanders.

Remove the key from the ignition before you do any maintenance.

⚠ CAUTION

This machine produces sound levels in excess of 85 dBA at the operator's ear and can cause hearing loss through extended periods of exposure.

Wear hearing protection when operating this machine.

Checking the Hydraulic Fluid

The machine's reservoir is filled at the factory with approximately 37.85 l (10 gal) of high-quality hydraulic fluid. Check the level of the hydraulic fluid before first starting the engine and daily thereafter. **Appropriate** hydraulic fluids are listed below.

The following list is not assumed to be all-inclusive. Hydraulic fluids produced by other manufacturers may be used if they can cross reference to find an equivalent to the products listed. Toro will not assume responsibility for any damage caused by improper substitutions, so use only products from reputable manufacturers who will support their recommendation.

Multigrade Hydraulic Fluid – ISO VG 46

Normal Climate: –18° C (0° F) to 43° C (110° F)	
Mobil	DTE 15M
Chevron	Rykon Premium Oil ISO 46
Conoco	Hydroclear AW MV46
Exxon	Univis N46
Pennzoil	AWX MV46
Shell	Tellus T 46
Texaco	Rando HDZ 46

Important: The ISO VG 46 Multigrade fluid has been found to offer optimal performance in a wide range of temperature conditions. For operation in consistently high ambient temperatures, 18° C (65° F) to 49° C (120° F), ISO VG 68 hydraulic fluid may offer improved performance.

Note: Many hydraulic fluids are almost colorless, which makes spotting leaks difficult. A red dye additive for the

hydraulic system fluid is available in 20 ml (2/3 oz) bottles. One bottle is sufficient for 15–22 l L (4 to 6 US gallons) of hydraulic fluid. Order part no. 44-2500 from your authorized Toro distributor. The red dye additive is not recommended for biodegradable fluid (use food coloring instead).

1. Operate the machine so that the fluid is warm, park the machine on a level surface, and stop the engine.
2. Check the level of the fluid by viewing the sight gauge (Figure 6). If the fluid is up to the middle of the gauge, the fluid level is sufficient.

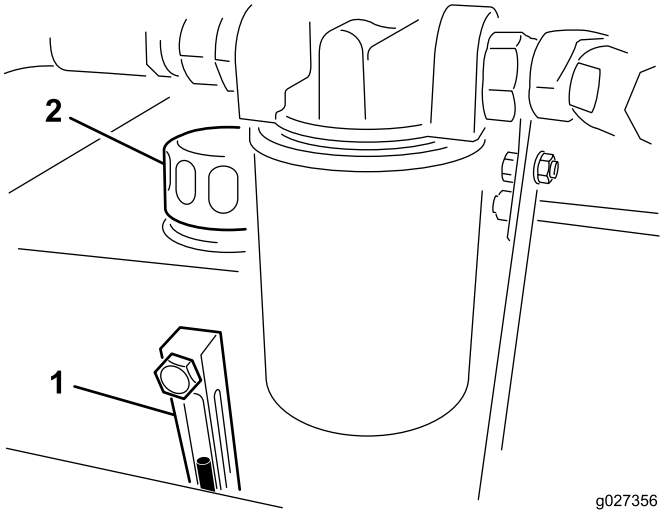

Figure 6

1. Sight gauge
2. Hydraulic reservoir cap

3. If the fluid level is below the middle of the gauge, remove the cap from the hydraulic fluid reservoir and slowly add a high-quality hydraulic fluid until the level reaches the middle (maximum) of the sight gauge. **Do not over fill.**

   Important: To prevent system contamination, clean the top of the hydraulic fluid containers before puncturing. Ensure that the pour spout and the funnel are clean.
4. Install the reservoir cap.

Checking the Tire Pressure

The correct air pressure in the tires is 124 kpa (18 psi).

Important: Maintain even pressure in both tires to ensure proper machine performance. *Do not under inflate.*

Checking the Torque of the Wheel Nuts

Service Interval: After the first 2 hours

After the first 10 hours

Every 200 hours

⚠ WARNING

Failure to maintain the proper torque of the wheel nuts could result in failure or loss of the wheel and may result in personal injury.

Connecting the Machine to the Tractor

1. Position the machine on a flat, level surface.
2. Insert the jack onto the frame pin and secure it with the pin (Figure 2).

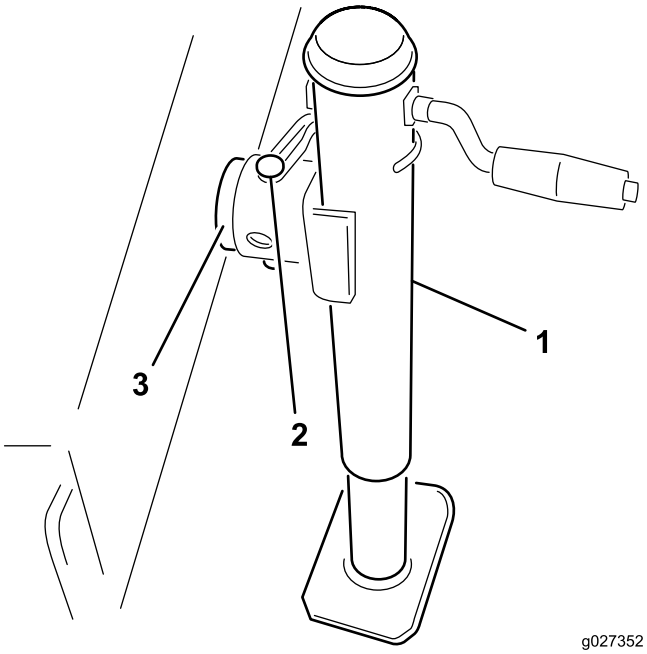

Figure 7

1. Jack
2. Pin
3. Frame pin

3. Adjust the jack height until the machine frame is parallel with the ground.
4. Back the tractor up to the machine.
5. Connect the tractor hitch to the machine clevis hitch with the hitch pin and clevis.
6. Remove the jack pin, rotate the jack upward to the storage position.

Connecting the PTO Shaft

1. Connect the PTO shaft to the machine impeller input shaft.
2. Connect the PTO shaft to the rear tractor PTO shaft.
3. Slide the PTO shaft forward as far as it will go.
4. Press the pin to secure the PTO shaft in place.

   Note: Slide the PTO shaft back and forth to ensure that it is properly locked.

5. Connect the shield safety chain to the tractor (Figure 8).

   Note: Ensure that the chain remains slack when you turn the tractor.

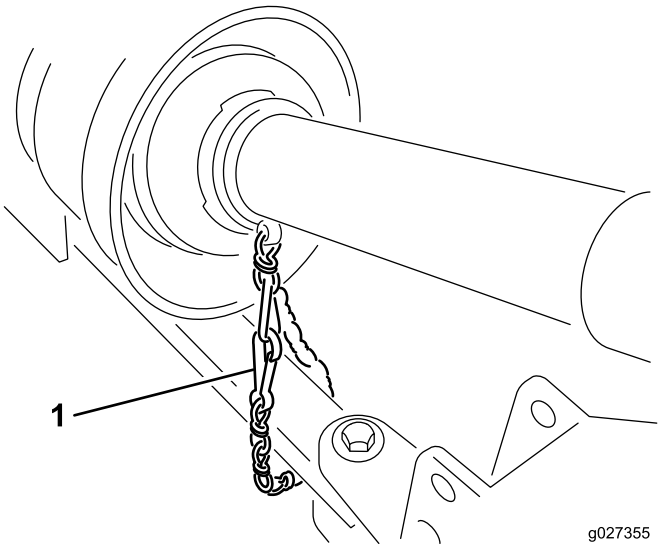

Figure 8

1. Safety chain

⚠ CAUTION

If the shield chains are not connected, the shields could rotate during operation and cause bodily injury.

Keep all PTO shields in place and connect the shield chain to the tractor or PTO shields.

Removing the Machine from the Tractor

1. Stop the tractor on a level surface, not on a slope.
2. Disengage the PTO and engage the parking brake.
3. Stop the engine and remove the key from the ignition switch.

⚠ CAUTION

Before leaving the operator's seat on the tractor, wait for the engine and all moving parts to stop.

4. Block the wheels.
5. Disconnect the safety shield chains from the tractor or PTO shield. Secure the end of the chain to the impeller side of the PTO shaft to prevent the PTO shaft from coming apart.
6. Disconnect the PTO shaft from the tractor output shaft.
7. Slide the PTO shaft back and remove it from the tractor.
8. Remove the pin that secures the jack to the frame pin and rotate the jack down into position.
9. Secure the jack to the frame pin and adjust the jack to support the machine.

⚠ WARNING

The trailer is very heavy. Do not disconnect the trailer without first putting down the jack.

Personal injury could occur if the hitch drops.

10. Remove the hitch pin and clevis.
11. Drive the tractor away.

Operating the Tractor Hydraulics

All hydraulic machine functions are controlled by the hydraulic valve that is located at the front of the machine. The PTO must be running while the machine is in use. This is what creates the continuous fluid flow throughout the machine.

Important: Never move a hydraulic lever rapidly between the up and down positions. Forcing a hydraulic motor to reverse directions instantly will likely severely damage it. If any part of the machine becomes plugged or material does not want to flow, shut the machine off completely and manually remove the blockage.

Note: The hydraulic control console can be adjusted for comfort by loosening the lever on the frame behind the controls, adjusting the control console fore or aft, and tightening the lever.

Operating the Machine

1. Start the tractor and run it at a low rpm.
2. Engage the PTO while the engine is at idle speed.
3. Increase the PTO speed to 540 rpm.

⚠ CAUTION

Shut the engine off and wait for all moving parts to stop before checking for fluid leaks, loose parts, and other malfunctions.

4. Before starting operation, survey the area to determine the best direction to go.
5. Drive the tractor forward and tow the machine over the area to be cleaned.

   Note: To maintain a straight line when operating, sight off an object in the foreground.

   Always try to make a long, continuous run with a slight overlap on the return run.

Transporting the Machine

You can transport the machine to work sites using any vehicle with a draw-bar-type hitch. The machine is not designed for highway towing.

- The wide flotation turf tires are not for highway use and are only for speeds below 24 km/h (15 mph). At speeds above 24 km/h (15 mph), the tires will lose their tread, cause harm to the operator, and damage the equipment.
- Ensure that the deck is raised and the casters cannot contact the ground during transport. Also, ensure that the cylinder lock bar (Figure 9) is in place to prevent the lift cylinder from compressing during transport.

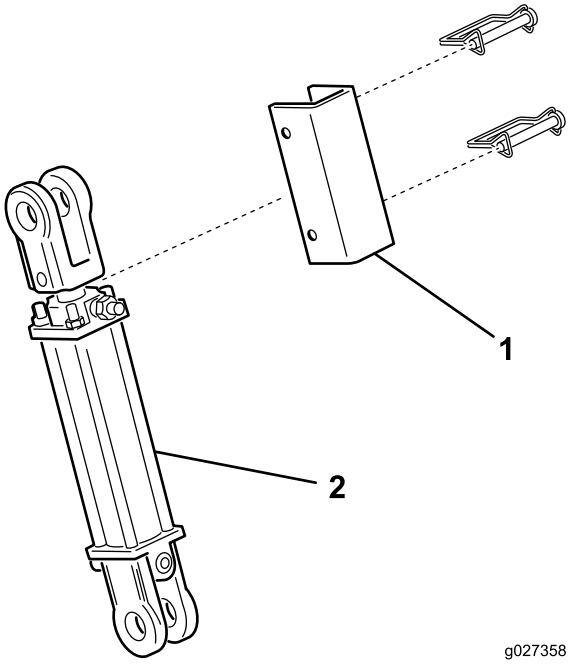

Figure 9

1. Cylinder lock bar
2. Lift cylinder

- Use adequate lighting and braking, a retainer type hitch pin, and a safety chain while towing.
- Make sure that the tires are properly inflated.

Maintenance

Recommended Maintenance Schedule(s)

Maintenance Service Interval	Maintenance Procedure
After the first 2 hours	• Torque the wheel nuts to 115 to 136 N-m (85 to 100 ft-lb).
After the first 10 hours	• Torque the wheel nuts to 115 to 136 N-m (85 to 100 ft-lb).
After the first 20 hours	• Check/adjust the impeller belt tension.
After the first 50 hours	• Replace the hydraulic filter.
Before each use or daily	• Grease the fan shaft bearings. • Check the hydraulic lines and hoses. • Check/adjust the impeller belt tension.
Every 100 hours	• Grease the drive shaft.
Every 200 hours	• Torque the wheel nuts to 115 to 136 N-m (85 to 100 ft-lb).
Every 800 hours	• Change the hydraulic fluid and filter.

Lubricating the Machine

Greasing the Fan Shaft Bearings

Service Interval: Before each use or daily

1. Remove the drive shield from over the pulley assemblies (Figure 13).
2. Grease the fittings on the fan shaft bearings as illustrated in Figure 11 with No. 2 lithium-based grease.

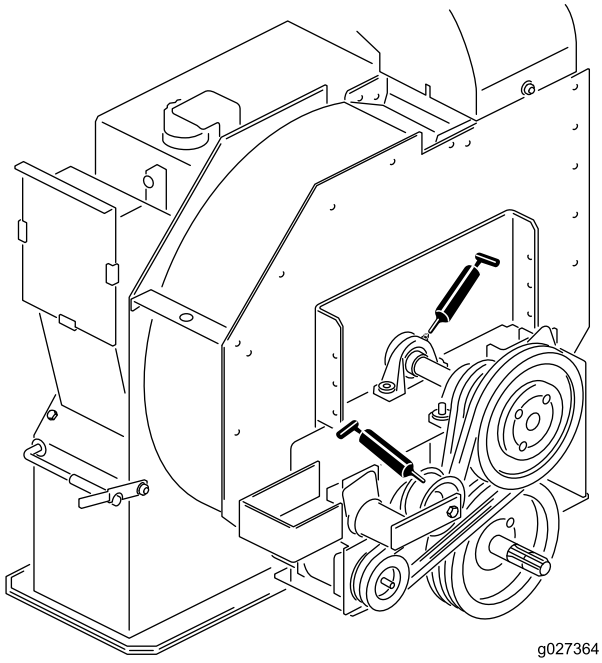

Figure 10

Greasing the Drive Shaft

Service Interval: Every 100 hours

Grease the 2 drive shaft fittings as illustrated in Figure 11 with No. 2 lithium-based grease.

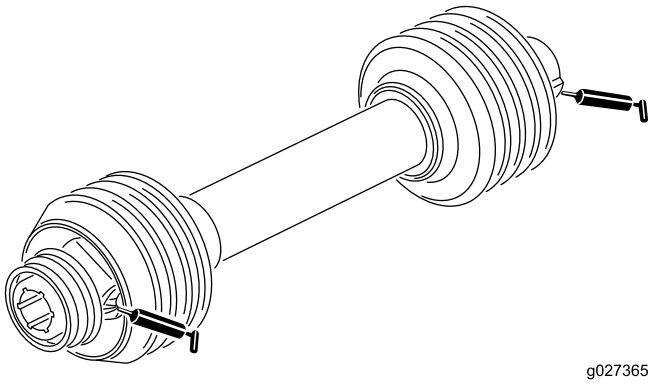

Figure 11

Checking the Hydraulic Lines and Hoses

Service Interval: Before each use or daily

Check the hydraulic lines and hoses for leaks, kinked lines, loose mounting supports, wear, loose fittings, weather, deterioration, and chemical deterioration. Make all necessary repairs before operating the machine.

⚠ WARNING

Hydraulic fluid escaping under pressure can penetrate skin and cause injury.

- **Ensure that all hydraulic fluid hoses and lines are in good condition and all hydraulic connections and fittings are tight before applying pressure to the hydraulic system.**
- **Keep body and hands away from pin-hole leaks or nozzles that eject high pressure hydraulic fluid.**
- **Use cardboard or paper to find hydraulic leaks.**
- **Safely relieve all pressure in the hydraulic system before performing any work on the hydraulic system.**
- **Seek immediate medical attention if fluid is injected into skin.**

Servicing the Hydraulic Fluid and Filter

Service Interval: After the first 50 hours—Replace the hydraulic filter.

Every 800 hours—Change the hydraulic fluid and filter.

Changing the Hydraulic Fluid

Important: If the fluid becomes contaminated, contact an authorized Toro distributor. Contaminated fluid looks milky or black when compared to clean fluid.

1. Turn the engine off.
2. Disconnect the small hydraulic hose (case drain) from the bottom of the reservoir and let the hydraulic fluid flow into a drain pan.

   Note: Install and tighten the hose when the hydraulic fluid stops draining.
3. Fill the reservoir with approximately 10 gallons of hydraulic fluid. Refer to Checking the Hydraulic Fluid (page 11).

   Important: Use only the hydraulic fluids specified. Other fluids could damage the system.

   To prevent over filling, do not fill if the fluid is cold. Do not over fill.
4. Install the reservoir cap.
5. Start the tractor engine, use all the hydraulic controls to distribute the hydraulic fluid throughout the system, and check for leaks.
6. Stop the engine
7. With the fluid warm, look into the sight gauge.

   Note: If the hydraulic fluid level is low, add enough fluid to raise the level to the middle (maximum) of the sight gauge.

Replacing the Hydraulic Filter

Use only the Toro replacement filter (Part No. 54-0110) in the hydraulic system.

Important: Use of any other filter may void the warranty on some components.

1. Turn the tractor engine off and remove the key from the ignition.
2. Clean the area around the filter mounting area.
3. Place a drain pan under the filter and remove the filter (Figure 12).

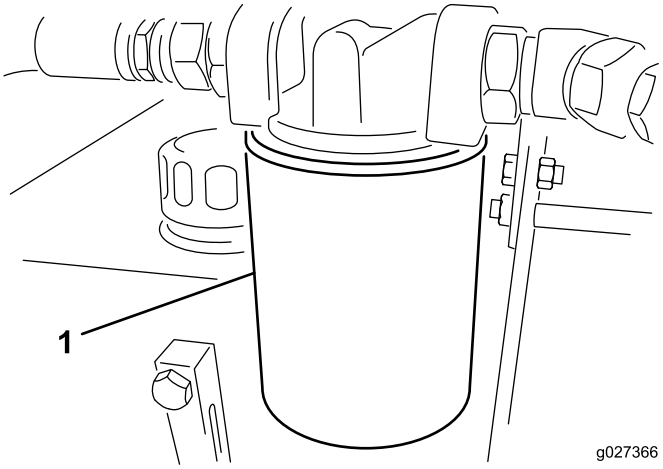

Figure 12

1. Hydraulic filter

4. Lubricate the new filter gasket and fill the filter with hydraulic fluid.
5. Ensure that the filter mounting area is clean.
6. Screw the filter on until the gasket contacts the mounting plate, then tighten the filter one–half turn.
7. Start the tractor engine and operate the hydraulic controls to purge air from the system.
8. Stop the engine and check the fluid level and for any leaks.

Adjusting the Impeller Belt

Service Interval: After the first 20 hours

Before each use or daily

Make sure that the belt is properly tensioned to ensure proper operation of the machine and prevent unnecessary wear.

1. Loosen the bolts and nuts securing the drive shield to the impeller housing (Figure 13) and remove the shield.

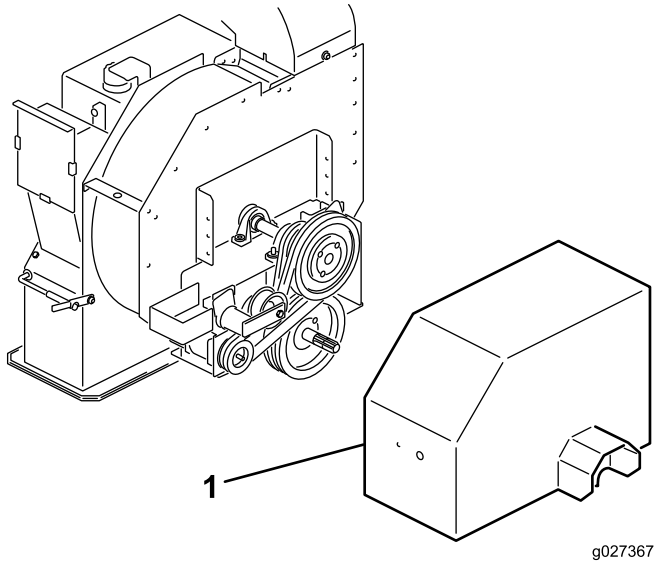

Figure 13

1. Drive shield

Note: The drive shaft does not have to be disconnected to adjust the belt.

2. On back side of the frame, loosen the bolt securing the belt tensioner to the frame (Figure 13).
3. Remove the bolt and nut securing the tensioner guide to the drive mount to release the belt tension (Figure 14).

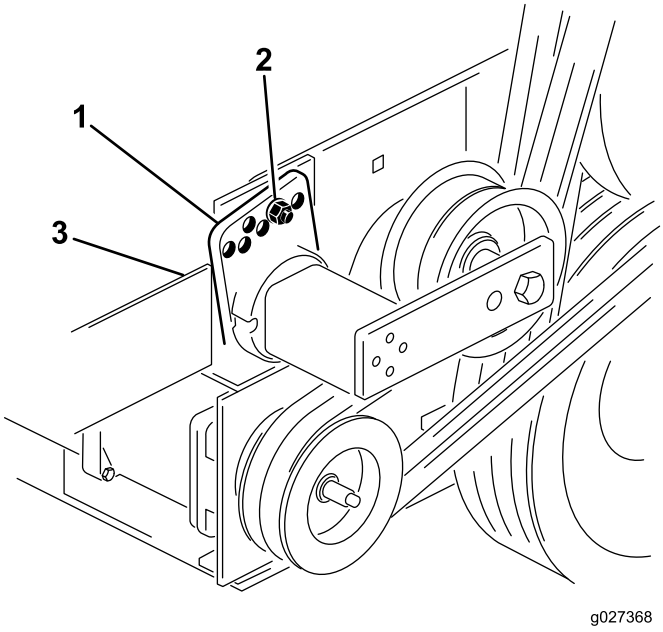

Figure 14

1. Tensioner guide
2. Bolt and nut
3. Bolt (back of frame)

---

4. Using a large wrench, rotate the tensioner clockwise until the decal is aligned with 15° on the tensioner tube.
5. Insert the bolt into the aligned guide holes and secure it ith the nut.

Note: If the holes are not exactly aligned, rotate the guide to the next higher hole until it is aligned.

6. Tighten the bolt on the back side of the frame to lock the tensioner.
7. Install the drive shield to the impeller housing with the bolts and nuts removed previously.

Storage

1. Thoroughly clean the machine. The impeller housing should be free of dirt, leaves, and debris.
2. Check the tire pressure; refer to Checking the Tire Pressure (page 12).
3. Tighten all fasteners as necessary.
4. Grease or oil all grease fittings and pivot points. Wipe up any excess lubricant.
5. Place a light coat of grease on the splines of the PTO shaft.
6. Lightly sand and use touch-up paint on painted areas that are scratched, chipped, or rusted. Repair any dents in the metal body.

Notes:

Toro General Commercial Product Warranty

A Two-Year Limited Warranty

Conditions and Products Covered

The Toro Company and its affiliate, Toro Warranty Company, pursuant to an agreement between them, jointly warrant your Toro Commercial product ("Product") to be free from defects in materials or workmanship for two years or 1500 operational hours*, whichever occurs first. This warranty is applicable to all products with the exception of Aerators (refer to separate warranty statements for these products). Where a warrantable condition exists, we will repair the Product at no cost to you including diagnostics, labor, parts, and transportation. This warranty begins on the date the Product is delivered to the original retail purchaser.
* Product equipped with an hour meter.

Instructions for Obtaining Warranty Service

You are responsible for notifying the Commercial Products Distributor or Authorized Commercial Products Dealer from whom you purchased the Product as soon as you believe a warrantable condition exists. If you need help locating a Commercial Products Distributor or Authorized Dealer, or if you have questions regarding your warranty rights or responsibilities, you may contact us at:

Toro Commercial Products Service Department
Toro Warranty Company
8111 Lyndale Avenue South
Bloomington, MN 55420-1196

952–888–8801 or 800–952–2740
E-mail: commercial.warranty@toro.com

Owner Responsibilities

As the Product owner, you are responsible for required maintenance and adjustments stated in your *Operator's Manual*. Failure to perform required maintenance and adjustments can be grounds for disallowing a warranty claim.

Items and Conditions Not Covered

Not all product failures or malfunctions that occur during the warranty period are defects in materials or workmanship. This warranty does not cover the following:

- Product failures which result from the use of non-Toro replacement parts, or from installation and use of add-on, or modified non-Toro branded accessories and products. A separate warranty may be provided by the manufacturer of these items.
- Product failures which result from failure to perform recommended maintenance and/or adjustments. Failure to properly maintain your Toro product per the Recommended Maintenance listed in the *Operator's Manual* can result in claims for warranty being denied.
- Product failures which result from operating the Product in an abusive, negligent, or reckless manner.
- Parts subject to consumption through use unless found to be defective. Examples of parts which are consumed, or used up, during normal Product operation include, but are not limited to, brake pads and linings, clutch linings, blades, reels, rollers and bearings (sealed or greasable), bed knives, spark plugs, castor wheels and bearings, tires, filters, belts, and certain sprayer components such as diaphragms, nozzles, and check valves, etc.
- Failures caused by outside influence. Conditions considered to be outside influence include, but are not limited to, weather, storage practices, contamination, use of unapproved fuels, coolants, lubricants, additives, fertilizers, water, or chemicals, etc.
- Failure or performance issues due to the use of fuels (e.g. gasoline, diesel, or biodiesel) that do not conform to their respective industry standards.
- Normal noise, vibration, wear and tear, and deterioration.
- Normal "wear and tear" includes, but is not limited to, damage to seats due to wear or abrasion, worn painted surfaces, scratched decals or windows, etc.

Parts

Parts scheduled for replacement as required maintenance are warranted for the period of time up to the scheduled replacement time for that part. Parts replaced under this warranty are covered for the duration of the original product warranty and become the property of Toro. Toro will make the final decision whether to repair any existing part or assembly or replace it. Toro may use remanufactured parts for warranty repairs.

Deep Cycle and Lithium-Ion Battery Warranty:

Deep cycle and Lithium-Ion batteries have a specified total number of kilowatt-hours they can deliver during their lifetime. Operating, recharging, and maintenance techniques can extend or reduce total battery life. As the batteries in this product are consumed, the amount of useful work between charging intervals will slowly decrease until the battery is completely worn out. Replacement of worn out batteries, due to normal consumption, is the responsibility of the product owner. Battery replacement may be required during the normal product warranty period at owner's expense. Note: (Lithium-Ion battery only): A Lithium-Ion battery has a part only prorated warranty beginning year 3 through year 5 based on the time in service and kilowatt hours used. Refer to the *Operator's Manual* for additional information.

Maintenance is at Owner's Expense

Engine tune-up, lubrication, cleaning and polishing, replacement of filters, coolant, and completing recommended maintenance are some of the normal services Toro products require that are at the owner's expense.

General Conditions

Repair by an Authorized Toro Distributor or Dealer is your sole remedy under this warranty.

Neither The Toro Company nor Toro Warranty Company is liable for indirect, incidental or consequential damages in connection with the use of the Toro Products covered by this warranty, including any cost or expense of providing substitute equipment or service during reasonable periods of malfunction or non-use pending completion of repairs under this warranty. Except for the Emissions warranty referenced below, if applicable, there is no other express warranty. All implied warranties of merchantability and fitness for use are limited to the duration of this express warranty.

Some states do not allow exclusions of incidental or consequential damages, or limitations on how long an implied warranty lasts, so the above exclusions and limitations may not apply to you. This warranty gives you specific legal rights, and you may also have other rights which vary from state to state.

Note regarding engine warranty:

The Emissions Control System on your Product may be covered by a separate warranty meeting requirements established by the U.S. Environmental Protection Agency (EPA) and/or the California Air Resources Board (CARB). The hour limitations set forth above do not apply to the Emissions Control System Warranty. Refer to the Engine Emission Control Warranty Statement supplied with your product or contained in the engine manufacturer's documentation for details

Countries Other than the United States or Canada

Customers who have purchased Toro products exported from the United States or Canada should contact their Toro Distributor (Dealer) to obtain guarantee policies for your country, province, or state. If for any reason you are dissatisfied with your Distributor's service or have difficulty obtaining guarantee information, contact the Toro importer.

374-0253 Rev C