Form No. 3371-640 Rev E

TORO®

Count on it.

Parts Catalog

Reelmaster® 3100-D

Traction Unit With Sidewinder®

Model No. 03171—Serial No. 312000001 and Up

Register at www.Toro.com.
Original Instructions (EN)

CE

3371-640 E

Ordering Replacement Parts

To order replacement parts, please supply the part number, the quantity, and the description of each part desired.

Understanding Reference Numbers

Each identified part in an illustration has a reference number. The reference number for a part also appears in the parts list, along with other information about the part.

This catalog uses two special reference number formats, one to indicate parts in a service assembly and another to indicate the quantity of a given part in an illustration.

Service Assembly Reference Numbers

Parts in service assemblies have reference numbers in the form a:b. The a represents the reference number of the entire service assembly and the b represents a sequential number unique to each part within the service assembly.

For example, a wheel assembly might be identified by reference number 6, the tire by 6:1, the valve by 6:2, and the wheel by 6:3. When you order the assembly identified by reference number 6, you receive all parts identified by reference numbers 6:1,6:2, and 6:3. However, you may also order any part individually. Reference numbers of this type appear in illustration and in parts lists.

Reference Numbers Indicating Quantity

In an illustration, if a reference number indicates more than one part, the reference number has the form nX y. The n represents the quantity of the part, the X is the multiplication symbol, and the y represents the reference number.

For example, in an illustration, the reference number 2X 37 means that two of the parts identified by reference number 37 are indicated.

List of Abbreviations

AR: as required

ASM: assembly

BBC: blade brake control

BHTF: button head thread forming

CARR: carriage

CCW: counter clockwise

CW: clockwise

DEG: degrees

DPA: Dual Point Adjustment

ECM: electronic control module

EXT: external

FH: flat head

GA: gauge

HD: heavy-duty

HF: hex flange

HH: hex head

HHF: hex head flange

HHFTF: hex head flange thread forming

HJ: hex jam

HLH: hex lag head

HOC: height-of-cut

HP: high pressure

HSBH: hex socket button head

HSFH: hex socket flat head

HSH: hex socket head

HWH: hex washer head

HWHTF: hex washer head thread forming

HYD: hydraulic

LH: left hand

LP: low pressure

LPG: Liquefied Petroleum Gas

NI: nylon insert

NPTF: national pipe thread fine

PFH: phillips flat head

PPH: phillips pan head

PPHTF: phillips pan head thread forming

PRH: phillips round head

PTH: phillips truss head

PTO: power-take-off

RH: right hand

ROPS: roll-over protection system

RRB: rear roller brush

SFH: slotted fillister head

SHH: slotted hex head

SHWH: slotted hex washer head

SPH: slotted pan head

SQH: square head

SRH: slotted round head

STD: standard

TAP: self tapping

TTH: torx truss head

Contents

Frame and Platform Assembly . . . 5
Front Wheel and Brake Assembly . . . 6
Brake Assembly No. 104-7705 . . . 8
Steering Column Assembly . . . 9
Steering Valve Assembly No. 104-5180 . . . 10
Rear Fork and Tire Assembly . . . 11
Hydraulic Cylinder Assembly No. 94-8141 . . . 13
Hydraulic Motor Assembly No. 95-8694 . . . 14
Control Panel Assembly . . . 15
Front Platform Assembly . . . 16
Traction Pedal Assembly . . . 17
Control Valve Installation Assembly . . . 18
Valve Assembly No. 95-8581 . . . 19
Rear Lift Arm Assembly . . . 20
Hydraulic Cylinder Assembly No. 112-9916 . . . 22
Neutral Arm Assembly . . . 23
Engine Assembly . . . 24
Air Cleaner and Muffler Assembly . . . 25
Air Cleaner Assembly No. 93-2190 . . . 26
Radiator Assembly . . . 27
Hood Assembly . . . 29
Fuel System Assembly . . . 30
Manifold Block Assembly . . . 32
Hydraulic Manifold Assembly No. 108-9037 . . . 33
Hydraulic Tank Assembly . . . 34
Hydrostat Assembly . . . 35
Hydraulic Pump Assembly No. 104-4890 . . . 37
Gear Pump Assembly No. 95-8601 . . . 39
Carrier Assembly . . . 40
Scissor Assembly . . . 41
Reel Motor Assembly . . . 42
Gear Motor Assembly No. 115-8250 . . . 43
Battery Assembly . . . 44
Parking Brake Assembly . . . 45
Seat Assembly . . . 46
Crankcase Assembly . . . 47
Oil Pan Assembly . . . 48
Cylinder Head Assembly . . . 49
Gear Case and Oil Filter Cartridge Assembly . . . 50
Cylinder Head Cover Assembly . . . 51
Dipstick and Guide Assembly . . . 52
Main Bearing Case Assembly . . . 53
Camshaft and Idle Gear Shaft Assembly . . . 54
Piston and Crankshaft Assembly . . . 55
Flywheel Assembly . . . 56
Fuel Camshaft and Governor Shaft Assembly . . . 57
Idle Apparatus and Stop Solenoid Assembly . . . 58
Injection Pump Assembly . . . 59
Governor Assembly . . . 60
Speed Control Plate Assembly . . . 61
Nozzle Holder and Glow Plug Assembly . . . 62
Nozzle Holder Assembly . . . 63
Alternator and Pulley Assembly . . . 64
Alternator Components Assembly . . . 65

© 2014—The Toro® Company

8111 Lyndale Avenue South
Bloomington, MN 55420

Contact us at www.Toro.com.
Printed in the USA.

All Rights Reserved

Contents (continued)

Starter Assembly 66
Starter (Component Part) Assembly No. 98-9705 67
Water Flange and Thermostat Assembly 68
Water Pump Assembly 69
Valve and Rocker Arm Assembly 70
Inlet and Exhaust Manifold Assembly 71
Operator Manual and Miscellaneous Engine Parts 72
Upper and Lower Gasket Kits 73
Attachments and Accessories 74

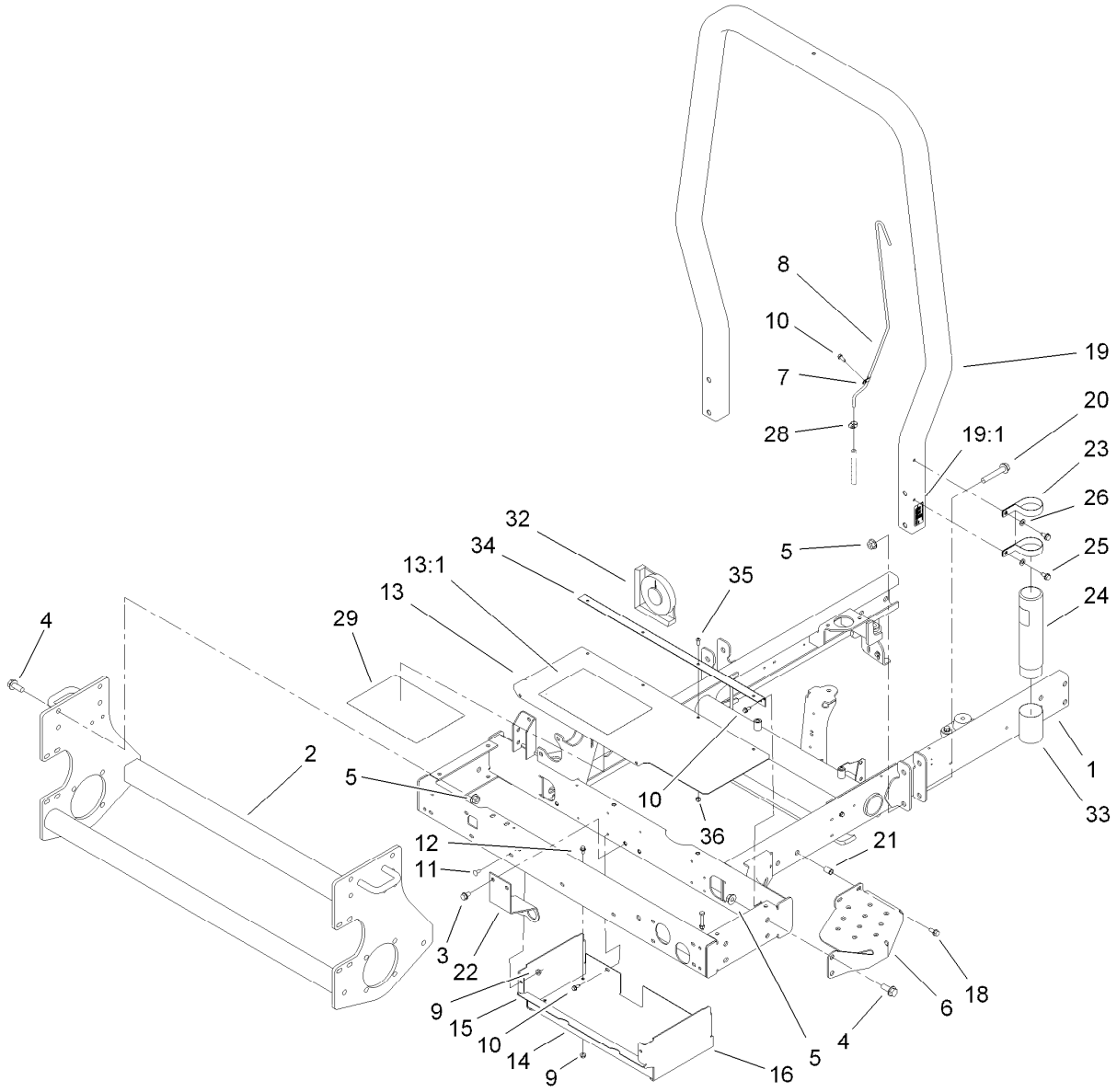

Frame and Platform Assembly

Ref.	Part Number	Qty.	Description
1	95-8590-03	1	Frame ASM
2	95-8568-03	1	Frame-Lower
3	32144-15	2	Screw-HHFTF
4	3234-38	8	Screw-HHF
5	32128-49	12	Nut-HHF
6	99-3375-03	1	Step
7	2412-72	3	Clip-Closed, Insulated
8	95-8615	1	Tube-Breather
9	32128-33	6	Nut-HF
10	32144-10	11	Screw-HWH
11	3229-11	2	Screw-CARR
12	3234-13	4	Screw-HHF
13	119-2029	1	Toolbox Cover ASM
13:1	99-3496	1	Decal-Danger
13:1	104-5181	1	Decal-Danger, Ce
14	99-3430-03	1	Bottom-Toolbox
15	99-3431-03	1	End-Toolbox, RH
16	99-3432-03	1	End-Toolbox, LH

Ref.	Part Number	Qty.	Description
18	3234-5	2	Screw-HHF
19	107-7833	1	ROPS ASM
19:1	107-7831	1	Decal-ROPS
20	3234-40	4	Screw-HF
21	32148-8	2	Insert-Threaded
22	115-3417-03	1	Bracket-Bulkhead, Scissor
23	104-7050	1	Tube-Manual
24	2412-133	2	R-Clamp
25	32144-70	2	Screw-HWHTF
26	3256-23	2	Washer-Flat
28	2412-108	1	Clamp-Worm
29	117-5104	1	Decal-Service
32	99-3503	1	Indicator-Angle
33	104-7048	1	Cap-Housing
34	119-2034	1	Hinge-Toolbox
35	119-6906	4	Screw-HSBH
36	3296-42	4	Nut-Lock, NI

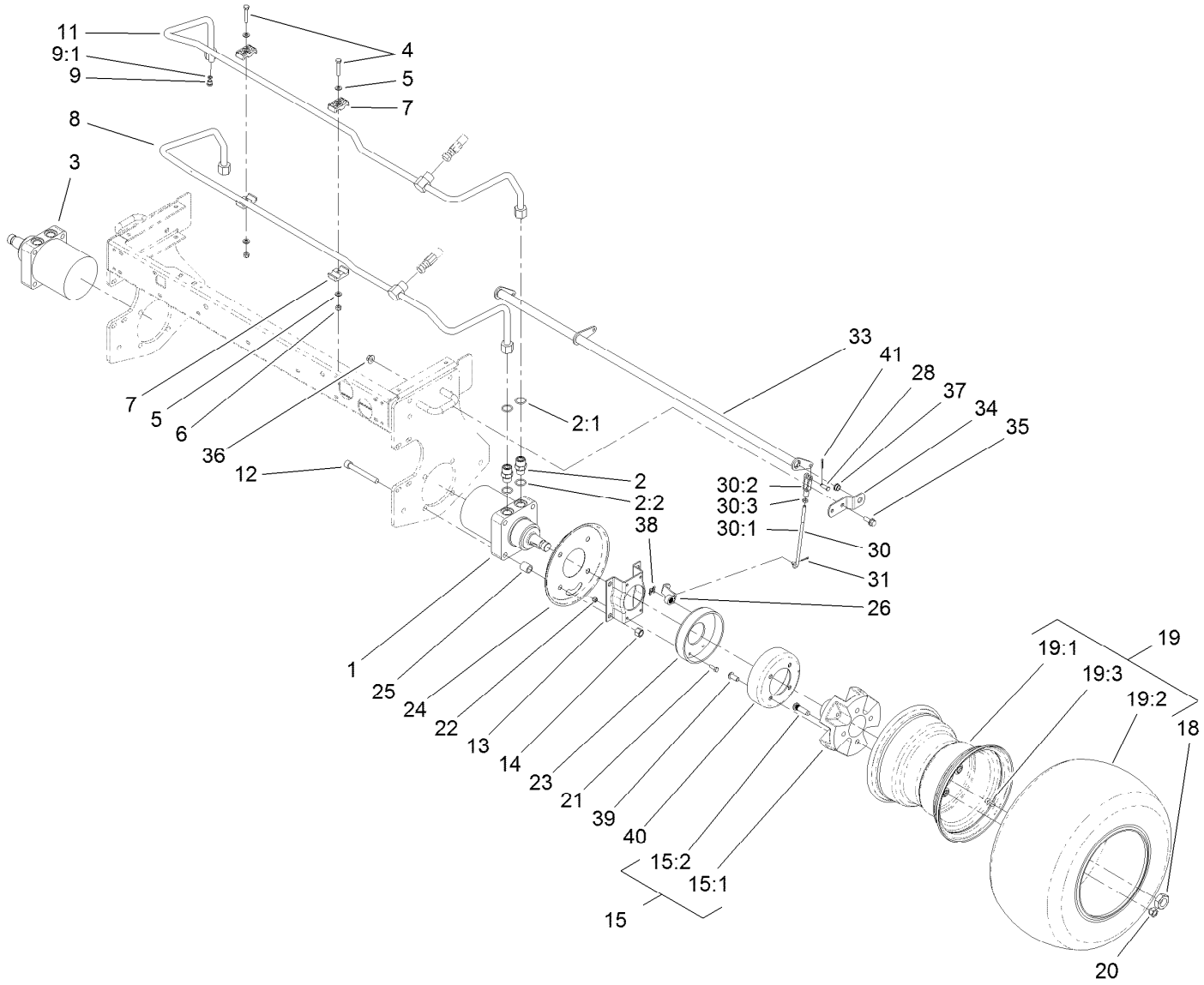

Front Wheel and Brake Assembly

Ref.	Part Number	Qty.	Description
1	110-8785	1	HYD Motor ASM (CCW)
2	340-7	4	Adapter
2:1	237-65	1	O-Ring
2:2	237-80	1	O-Ring
3	110-8786	1	HYD Motor ASM (CW)
4	322-9	2	Screw-HH
5	3256-23	4	Washer-Flat
6	3296-29	2	Nut-Lock, NI
7	56-7971	4	Clamp-Tube
8	95-8783	1	Tube ASM
9	353-990	1	Plug ASM
9:1	237-78	1	O-Ring
11	95-8784	1	Tube ASM
12	3274-99	8	Screw-HSH
13	84-2000-03	2	Bracket-Brake
14	3296-23	8	Nut-Lock, NI
15		2	Wheel Hub / Stud ASM ●
15:1	104-0462-03	1	Hub-Wheel

Ref.	Part Number	Qty.	Description
15:2	10-6830	4	Stud-Type, Drive
18	26-3790	2	Nut-Lock
19		2	Wheel And Tire ASM ●
19:1	117-5126	1	Rim
19:2	117-5125	1	Tire
19:3	232-27	1	Stem-Valve
20	242-50	8	Nut-Lug
21	321-5	8	Screw-HH
22	3296-42	8	Nut-Lock, NI
23	104-7705	2	Brake ASM
24	104-0485-03	2	Shield-Wheel
25	119-8238	8	Spacer-Deck Pulley
26	114-2726	2	Lever-Brake
28	283-1	2	Pin-Clevis
30	115-6672	2	Brake Lever ASM
30:1	104-4627	1	Rod-Adjusting
30:2	1-303105	1	Yoke-Adjustable
30:3	3220-2	1	Nut-Jam

● Not serviced separately

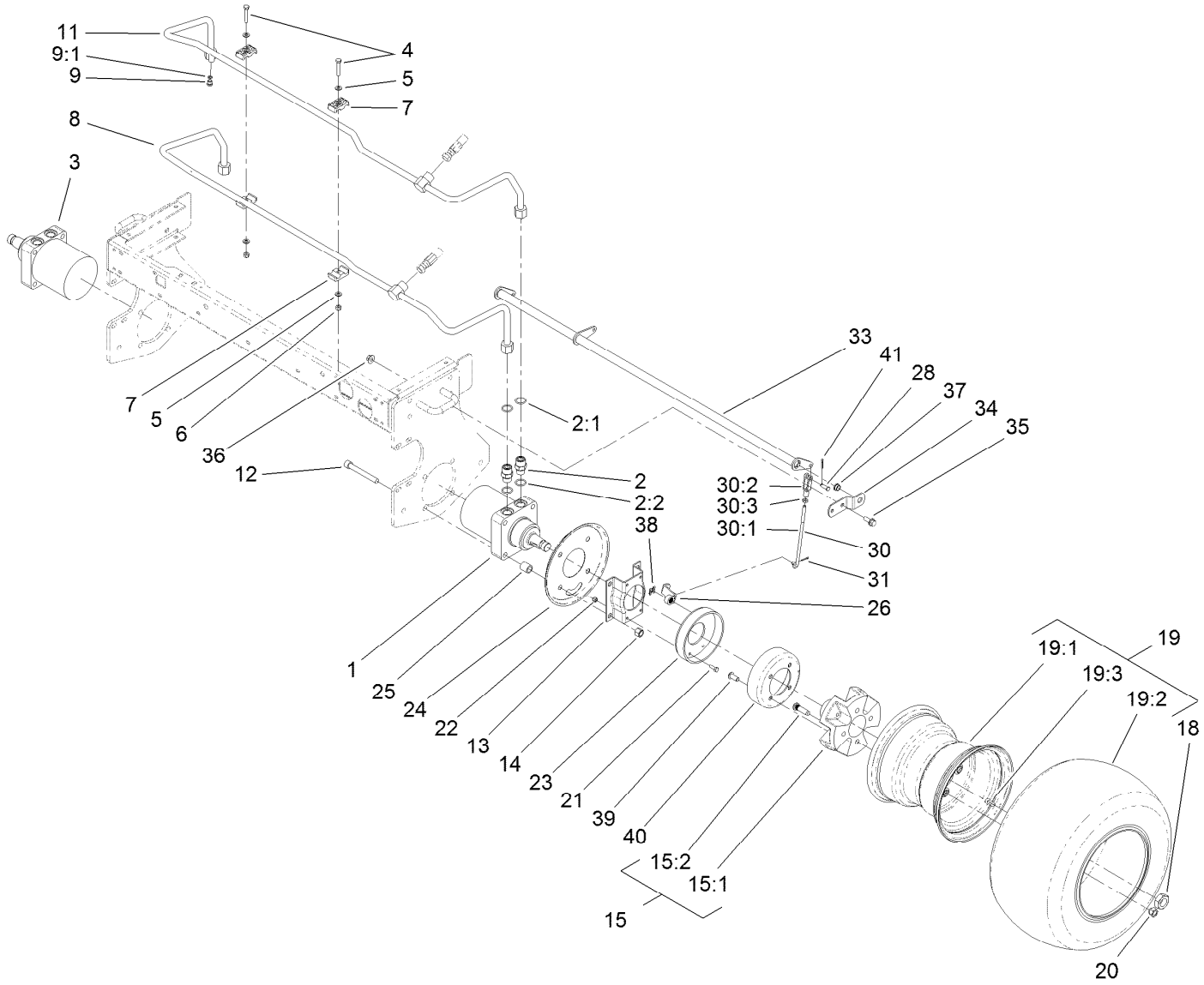

Front Wheel and Brake Assembly (continued)

Ref.	Part Number	Qty.	Description
31	3272-6	2	Pin-Cotter
33	104-4625-03	1	Shaft-Pivot, Brake
34	95-8683	2	Bracket-Pivot, Brake
35	3234-11	4	Screw-HHF
36	32128-43	4	Nut-Flange

Ref.	Part Number	Qty.	Description
37	256-156	2	Bushing-Flange
38	104-7706	2	E-Ring, Bowed
39	3274-105	8	Screw-HSBH
40	104-4809	2	Drum-Brake
41	3272-10	2	Pin-Cotter

● Not serviced separately

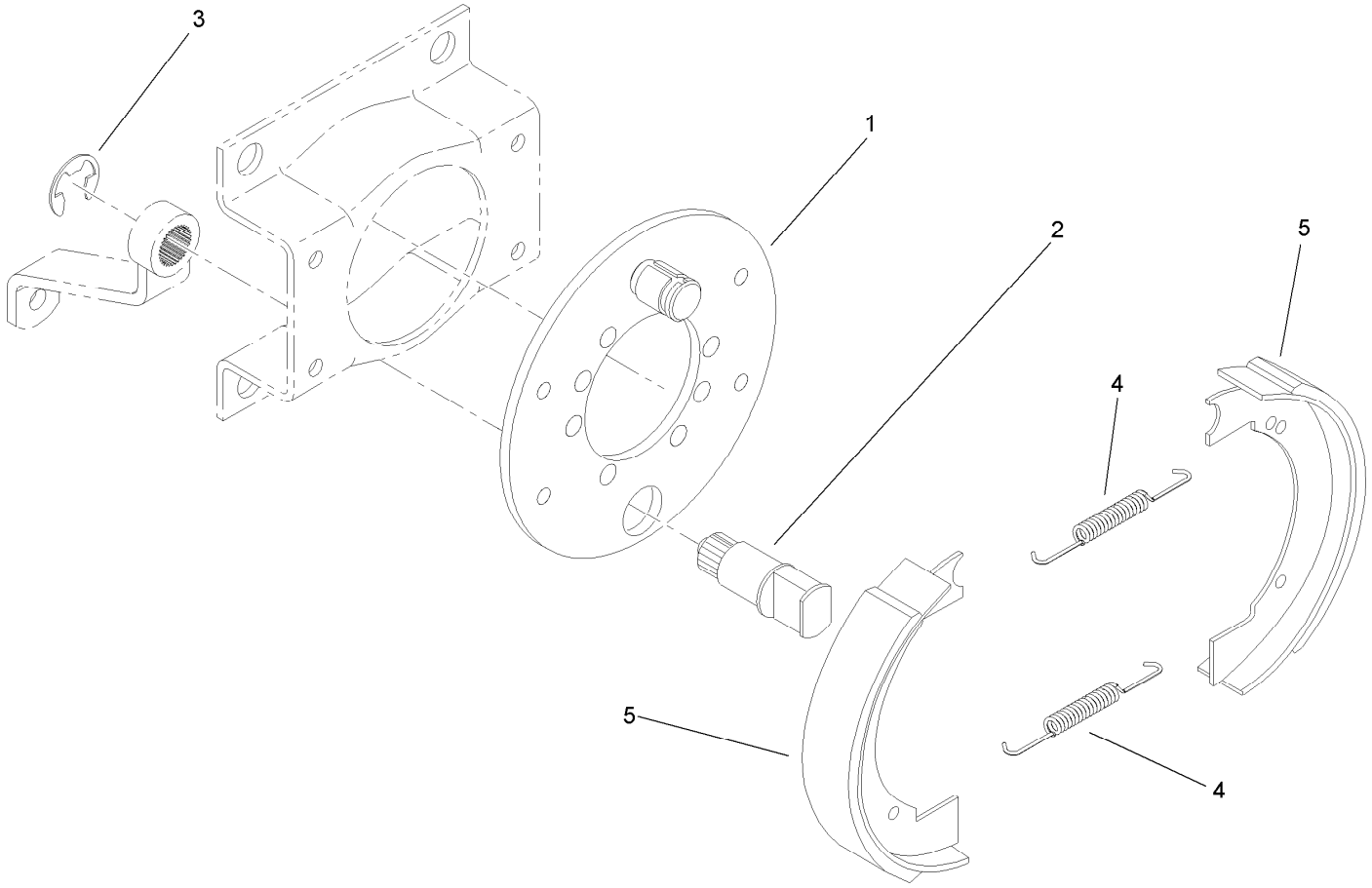

Brake Assembly No. 104-7705

Ref.	*Part Number*	*Qty.*	*Description*
1	70-9870	1	Plate-Backing
2	104-7707	1	Shaft-Cam, Brake
3	104-7706	1	E-Ring, Bowed
4	70-9880	2	Spring-Return
5	70-9840	2	Shoe-Brake

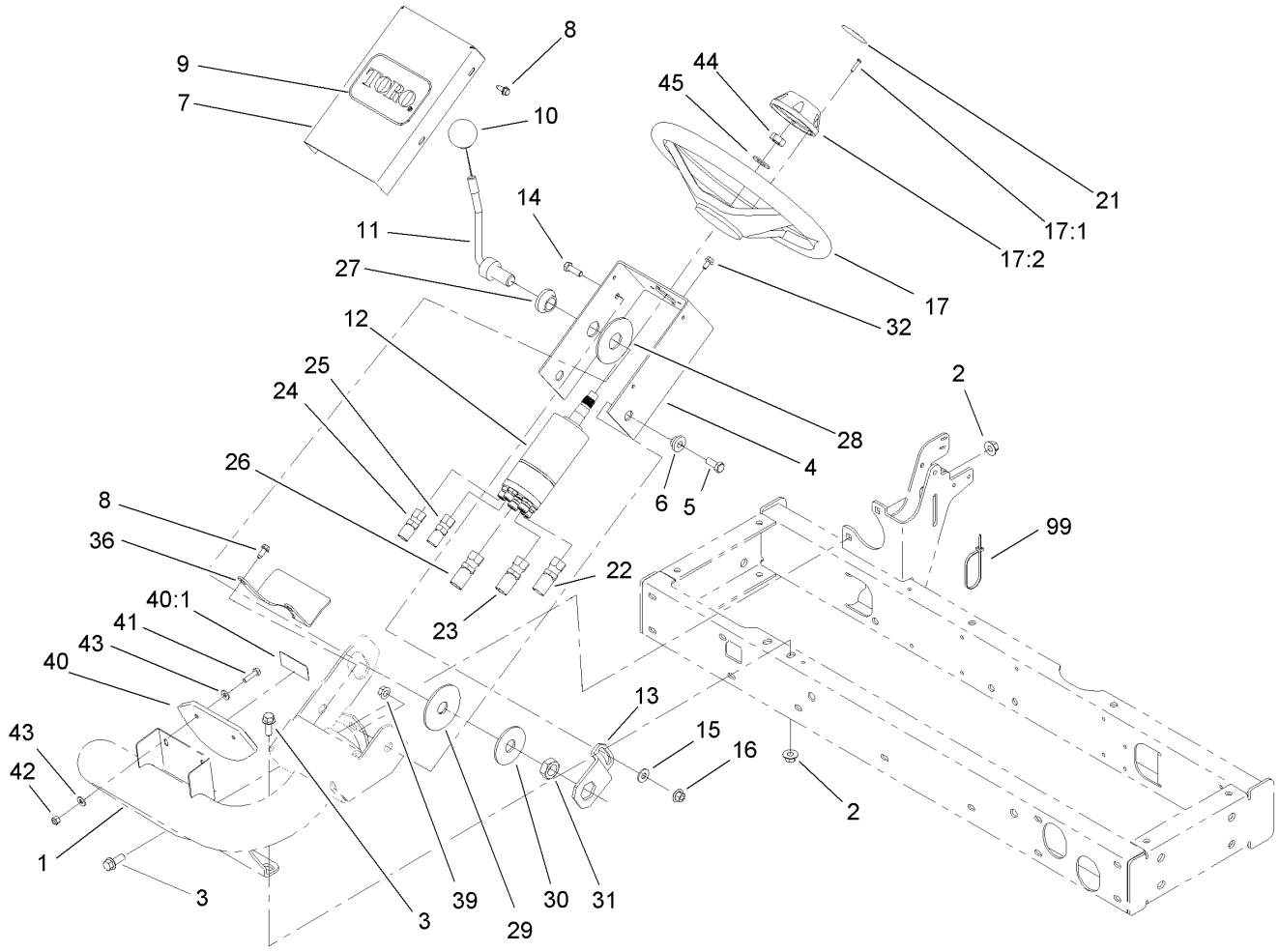

Steering Column Assembly

Ref.	Part Number	Qty.	Description
1	105-8536-01	1	Arm-Steering
2	32128-43	4	Nut-Flange
3	3234-11	4	Screw-HHF
4	104-5185-01	1	Bracket-Valve, Steering
5	323-5	2	Screw-HH
6	93-5988	2	Hub-Pivot
7	95-8794-01	1	Cover-Valve, Steering
8	32144-10	5	Screw-HWH
9	67-1300	1	Decal
10	233-48	1	Knob
11	95-8798-03	1	Lever-Steering
12	104-5180	1	Steering Valve ASM
13	80-2880	1	Bracket-Tilt
14	322-5	1	Screw-HH
15	3256-3	1	Washer-Flat
16	32128-44	1	Nut
17	75-0560	1	Steering Wheel ASM
17:1	32144-21	1	Screw
17:2	68-5140	1	Cap-Wheel, Steering
21	68-5370	1	Decal
22	95-8842	1	Hose-HYD

Ref.	Part Number	Qty.	Description
23	95-8843	1	Hose-HYD
24	95-8844	1	Hose ASM
25	95-8845	1	Hose ASM
26	95-8846	1	Hose-HYD
27	99-3502	1	Boss
28	31-0390	1	Disc-Friction
29	82-9010	1	Disc-Friction
30	80-2930	1	Washer-Flat
31	3218-7	1	Nut-Jam
32	33103-012	4	Screw-HHF
36	99-3405-01	1	Shield-Steering
39	32128-21	2	Nut-HF
40	100-4929	1	Slope Indicator ASM
40:1	107-7801	1	Decal-Danger, Ce
40:1	100-4837	1	Decal-Danger
41	321-7	2	Screw-HH
42	3296-42	2	Nut-Lock, NI
43	3256-22	4	Washer-Flat
44	3296-33	1	Nut-Lock, NI
45	3256-27	1	Washer-Flat
99	3290-378	2	Tie-Cable

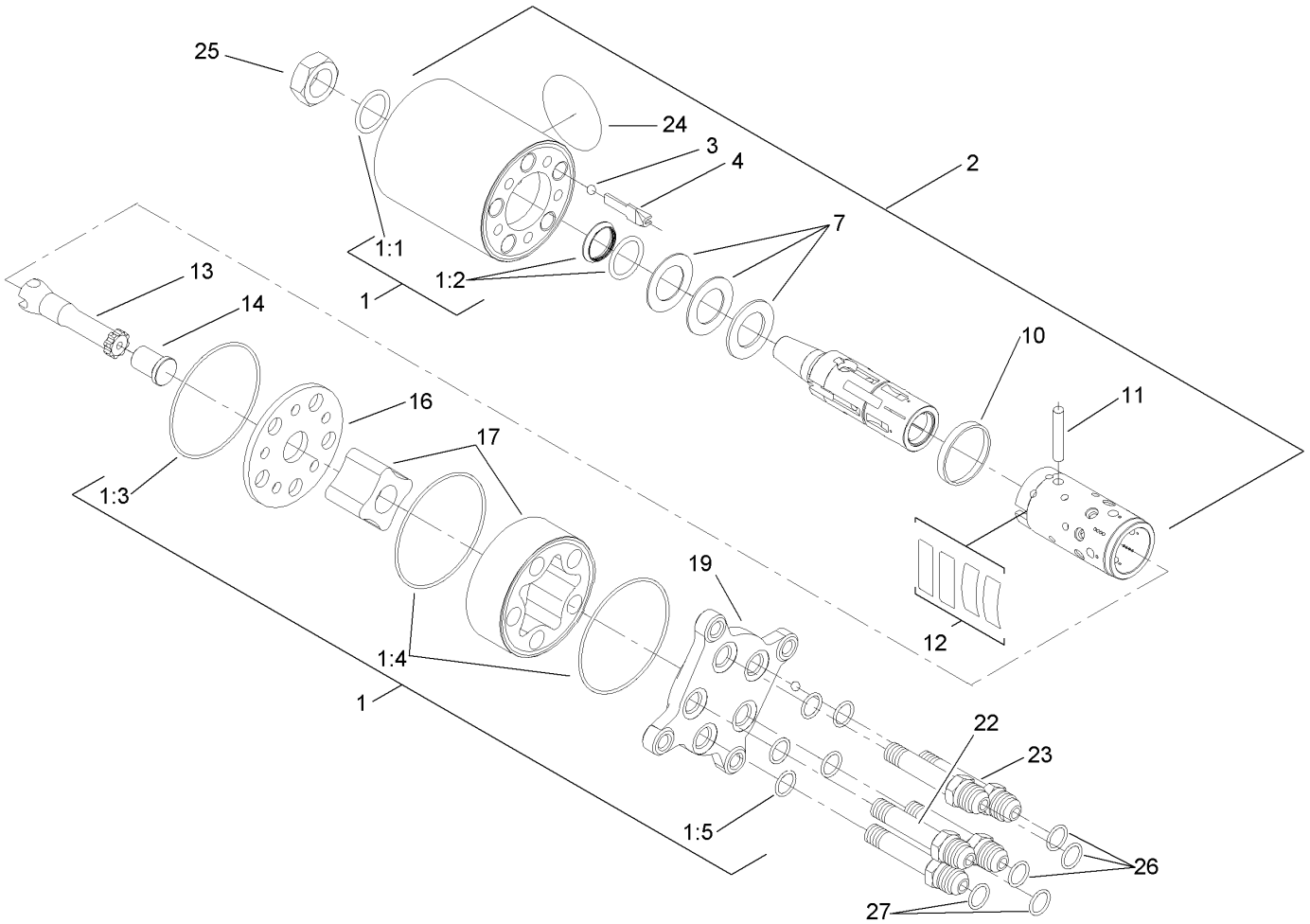

Steering Valve Assembly No. 104-5180

Ref.	Part Number	Qty.	Description
1	106-6716	1	Seal Kit
1:1		1	Ring-Seal, Dust ●
1:2		1	Seal-Shaft ●
1:3		1	O-Ring ●
1:4		2	O-Ring ●
1:5		5	O-Ring ●
2		1	Housing ●
3		1	Ball ●
4		1	Stop-Ball ●
7		1	Bearing ASM ●
10		1	Ring ●
11		1	Pin-Cross ●
12		1	Springs ●
13		1	Shaft ●
14		1	Spacer ●
16		1	Plate-Distributor ●
17		1	Gearwheel Set ●
19		1	Cover-End ●
22		1	Screw-Special ●
23		4	Screw-Special ●
24		1	Plate-Name ●
25	3296-33	1	Nut-Lock, NI
26	237-22	3	O-Ring
27	237-21	2	O-Ring

● Not serviced separately

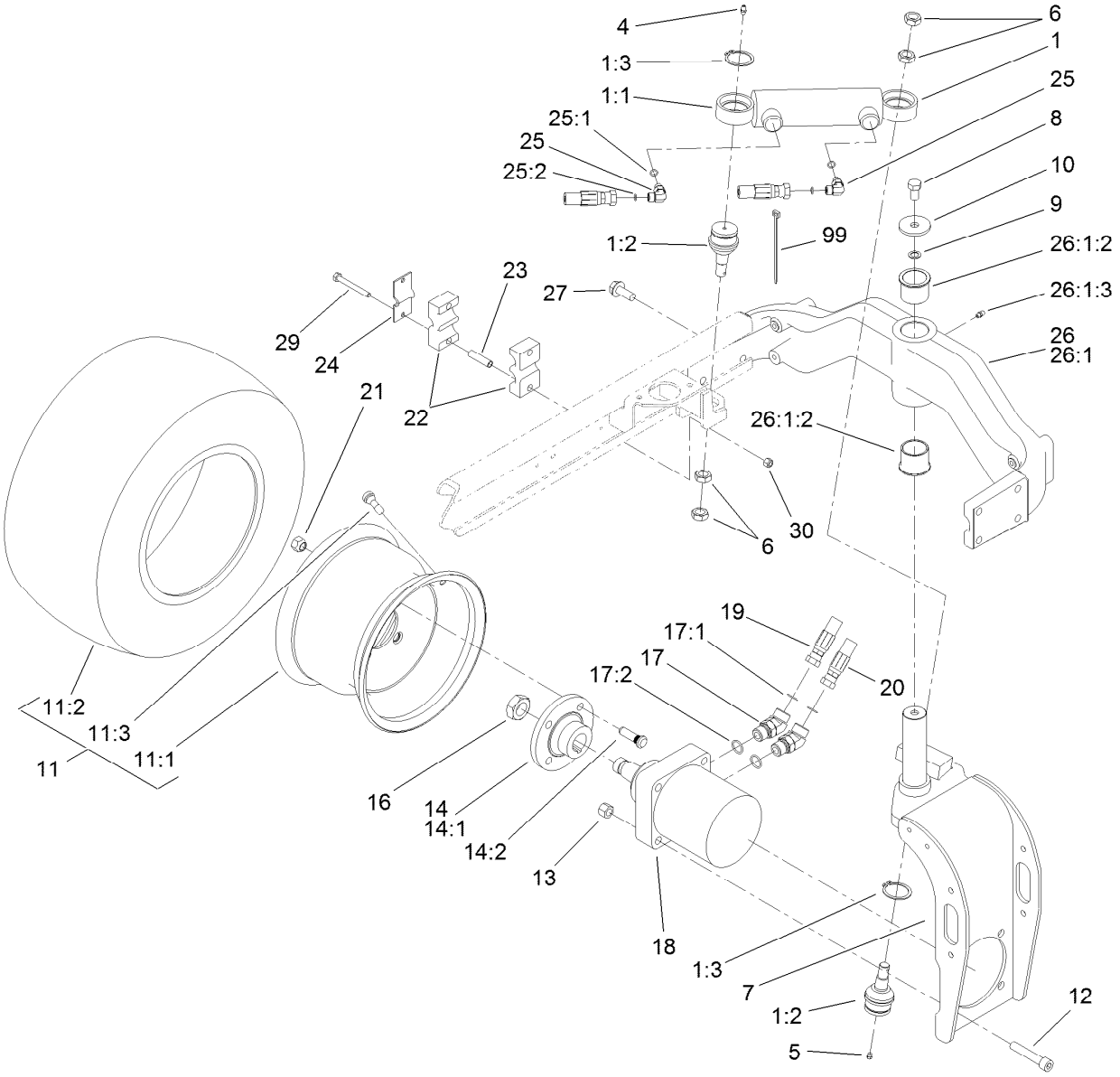

Rear Fork and Tire Assembly

Ref.	Part Number	Qty.	Description
1		1	Steering Cylinder / Balljoint ASM ●
1:1	94-8141	1	HYD Cylinder ASM
1:2	106-6774	2	Joint-Ball
1:3	32151-104	2	Ring-Retaining, External
4	302-5	1	Fitting-Grease
5	302-59	1	Plug-Threaded
6	3220-6	4	Nut-Jam
7	95-8905-01	1	Fork-Rear
8	325-3	1	Screw-HH
9	3255-2	1	Washer-Lock / EXT
10	75-7730	1	Washer-Thrust
11		1	Wheel And Tire ASM ●
11:1	117-5129	1	Rim
11:2	115-1572	1	Tire
11:3	232-27	1	Stem-Valve
12	3274-93	4	Screw-HSH
13	3296-23	4	Nut-Lock, NI

Ref.	Part Number	Qty.	Description
14		1	Wheel Hub / Stud ASM ●
14:1	10-6870-03	1	Hub-Wheel
14:2	10-6830	4	Stud-Type, Drive
16	26-3790	1	Nut-Lock
17	340-14	2	Fitting-HYD, 45 DEG
17:1	237-65	1	O-Ring
17:2	237-80	1	O-Ring
18	95-8694	1	HYD Motor ASM
19	105-1221	1	Hose ASM
20	105-1222	1	Hose ASM
21	242-50	4	Nut-Lug
22	82-8170	2	Clamp
23	93-7960	2	Spacer
24	93-7961	1	Clamp-Drain, Case
25	340-132	2	Fitting-HYD, 90 DEG
25:1	237-78	1	O-Ring
25:2	237-21	1	O-Ring
26	107-7828-03	1	Casting-Rear

● Not serviced separately

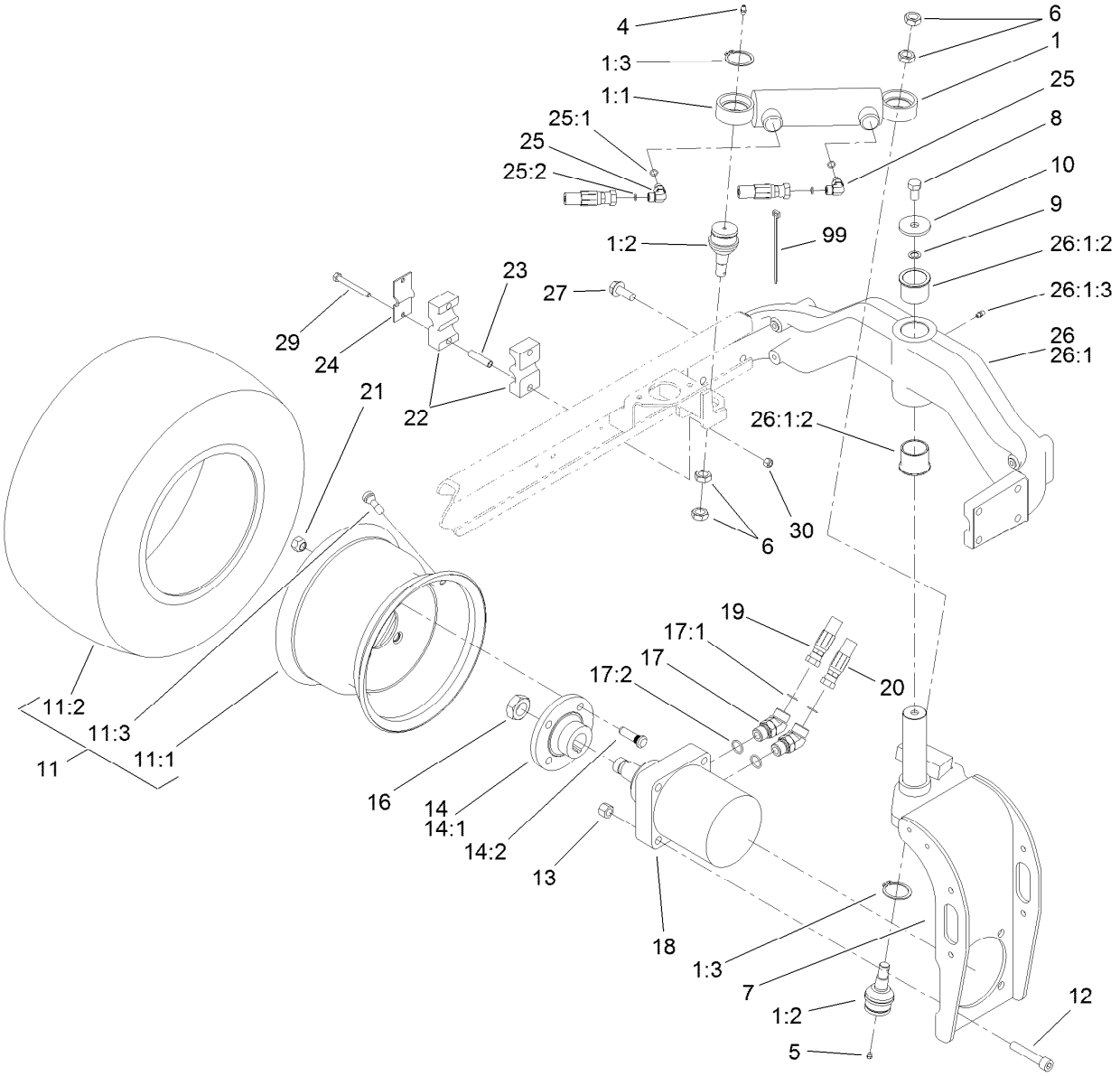

Rear Fork and Tire Assembly (continued)

Ref.	Part Number	Qty.	Description
26:1		1	Rear Casting ASM ●
26:1:2	95-8805	2	Bushing
26:1:3	302-5	1	Fitting-Grease
27	3234-38	8	Screw-HHF

Ref.	Part Number	Qty.	Description
29	322-13	2	Screw-HH
30	3296-29	2	Nut-Lock, NI
99	3290-378	5	Tie-Cable

● Not serviced separately

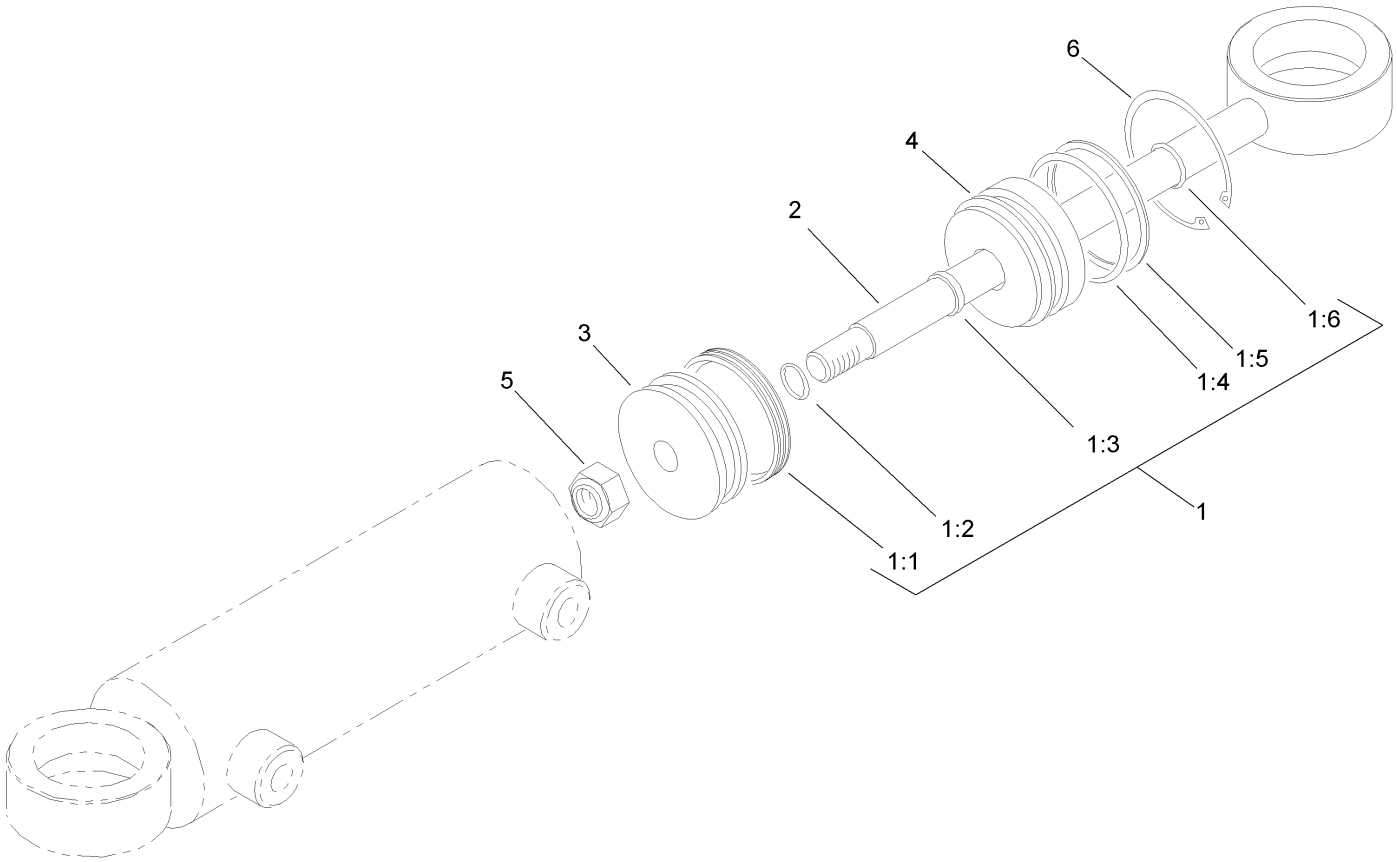

Hydraulic Cylinder Assembly No. 94-8141

Ref.	*Part Number*	*Qty.*	*Description*
1	86-5390	1	Seal Kit
1:1		1	Uniring ●
1:2		1	O-Ring ●
1:3		1	Seal-Rod ●
1:4		1	O-Ring ●
1:5		1	Ring-Backup ●
1:6		1	O-Ring ●
2		1	Rod ●
3		1	Piston ●
4		1	Gland ●
5		1	Nut-Lock ●
6		1	Ring-Retaining ●

● Not serviced separately

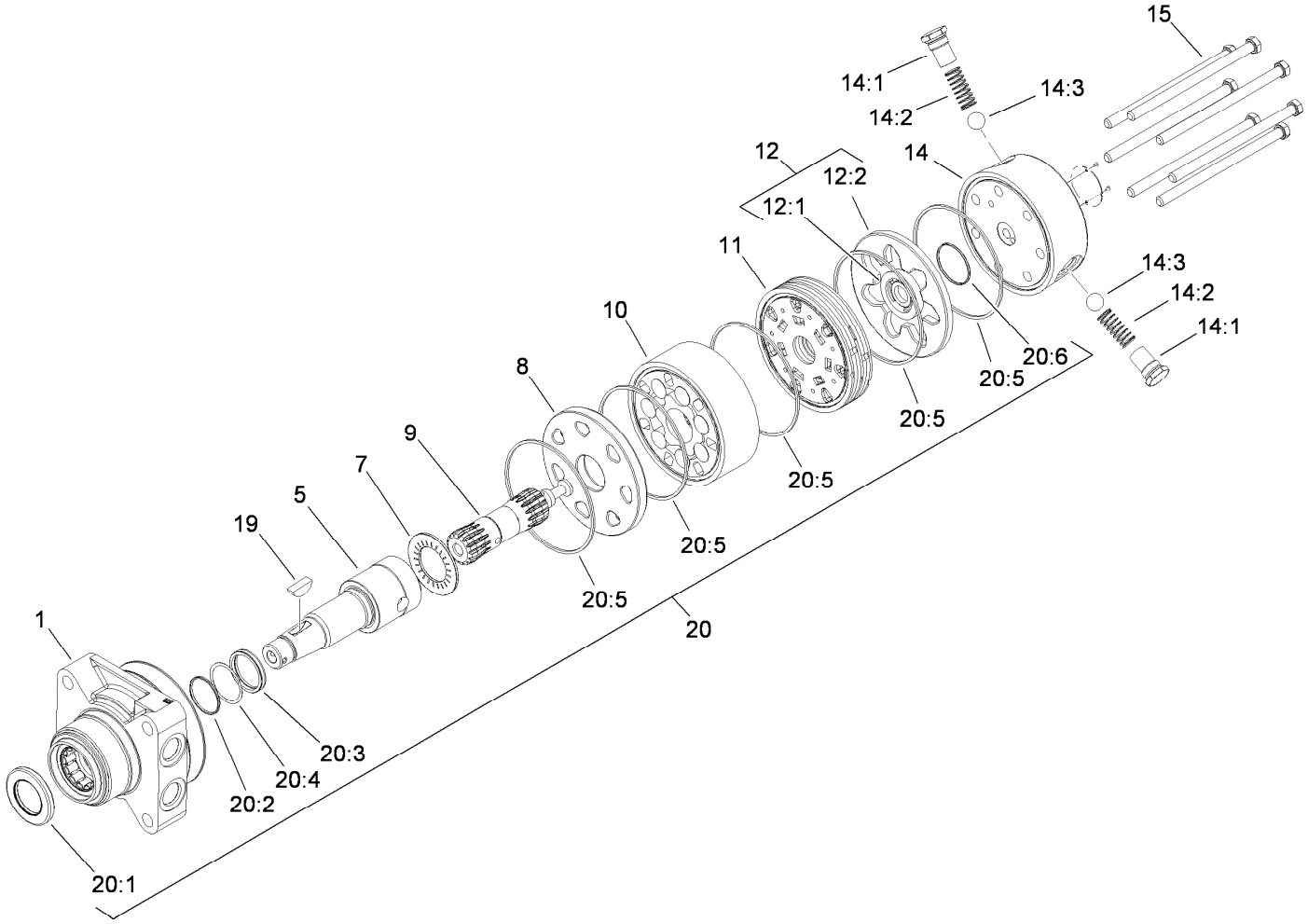

Hydraulic Motor Assembly No. 95-8694

Ref.	Part Number	Qty.	Description
1	76-0810	1	Housing ASM
5	99-3090	1	Shaft-Coupling
7	76-0850	1	Bearing-Thrust
8	76-0870	1	Plate-Wear
9	99-3537	1	Link-Drive
10	99-3539	1	Set-Rotor
11	99-3535	1	Manifold
12	76-0880	1	Commutator ASM
12:1		1	Commutator ●
12:2		1	Ring-Commutator ●
14	99-3538	1	End Cover ASM
14:1		1	Spring Cap And O-Ring ASM ●

Ref.	Part Number	Qty.	Description
14:2	99-3541	1	Spring
14:3	99-3540	1	Ball
15	99-3536	7	Screw-HH
19	3257-42	1	Key-Woodruff
20	94-8178	1	Seal Kit
20:1		1	Seal-Dirt And Water ●
20:2		1	Backup-Ring ●
20:3		1	Seal-Shaft ●
20:4		1	Washer-Backup ●
20:5		5	Seal-Square, Ring (Inner) ●
20:6		1	Seal-Commutator ●

● Not serviced separately

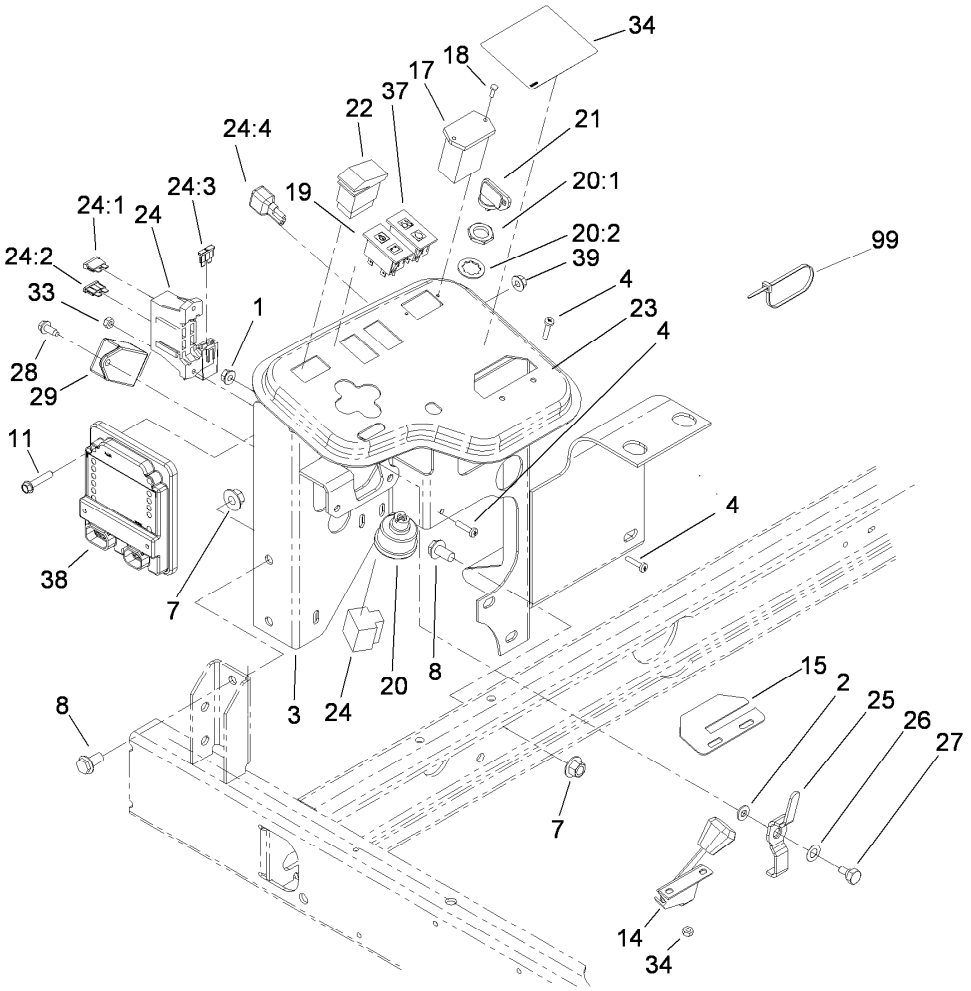

Control Panel Assembly

Ref.	Part Number	Qty.	Description
1	32128-33	3	Nut-HF
2	3256-22	1	Washer-Flat
3	115-3496-03	1	Panel-Control
4	3290-134	4	Screw
7	32128-43	5	Nut-Flange
8	3234-1	5	Screw-HHF
11	321-8	3	Screw-HH
14	110-8795	1	Cable-Throttle
15	104-0421	1	Plate-Stop, Throttle
17	75-6820	1	Hourmeter
18	32144-18	2	Screw-HWH
19	100-8070	1	Lamp-Warning
20	104-2541	1	Switch ASM
20:1	218-461	1	Nut-HH
20:2	3254-5	1	Washer-Tooth, Internal
21	63-8360	2	Key-Ignition
22	95-8999	1	Switch
23	104-5192	1	Decal-Console

Ref.	Part Number	Qty.	Description
24	112-9911	1	Harness-Wire
24:1	218-578	2	Fuse-Blade, 10 Amp
24:2	109355	1	Fuse-Blade, 15 Amp
24:3	94-6710	1	Fuse-2 Amp
24:4	100-4918	1	Diode-Over Molded
25	99-3401-03	1	Lever-Valve, Lock
26	3290-477	1	Washer-Curved
27	63-3410	1	Screw-Shoulder
28	32144-10	1	Screw-HWH
29	98-7611	1	Controller-Glow
33	3290-148	4	Nut-HF
34	99-3558	1	Decal-Console, Ce
37	100-8071	1	Lamp-Warning
38	106-9277	1	Module-Control, Standard
39	32128-32	1	Nut-HHF
99	3290-378	3	Tie-Cable
99	3290-379	4	Tie-Cable

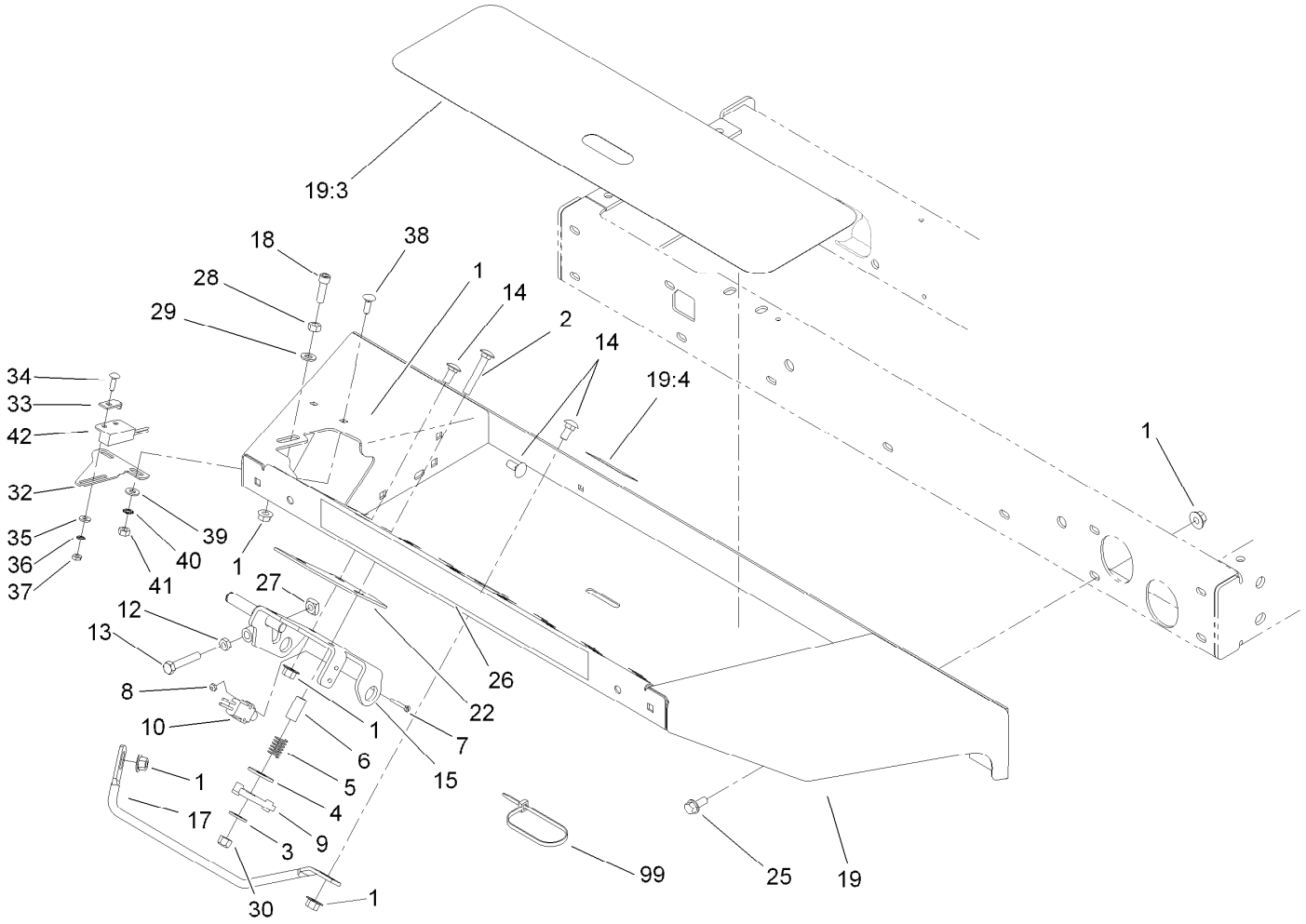

Front Platform Assembly

Ref.	Part Number	Qty.	Description
1	32128-20	18	Nut-HF
2	3230-6	1	Screw-CARR
3	3256-3	1	Washer-Flat
4	3256-40	1	Washer-Flat
5	65-9940	1	Spring
6	95-8866	1	Tube-Arm, Rocker
7	32105-9	2	Screw
8	3296-9	2	Nut-Lock
9	99-3593	1	Arm-Rocker
10	95-8900	1	Switch
12	3218-2	1	Nut-Jam
13	322-41	1	Screw-HH
14	3230-23	7	Screw-CARR
15	95-8869-03	1	Bracket-Pedal, Traction
17	95-8893	1	Bar-Deflector
18	3274-22	1	Screw-HSH
19	106-4154	1	Floorplate ASM
19:3	99-3478	1	Tread-Foot
19:4	99-3444	1	Decal-Mow / Transport

Ref.	Part Number	Qty.	Description
22	106-2661-01	1	Plate-Support
25	3234-5	10	Screw-HHF
26	99-3388	1	Decal
27	99-3565	1	Nut-Square
28	3217-6	1	Nut-Hex
29	3256-23	1	Washer-Flat
30	3296-29	1	Nut-Lock, NI
32	100-4871	1	Bracket-Switch, Neutral
33	100-4872	1	Plate-Switch, Neutral
34	3229-20	1	Screw-CARR
35	3256-14	1	Washer-Flat
36	3255-17	1	Washer-Lock, EXT
37	3296-2	1	Nut-Lock, NI
38	3229-1	2	Bolt-CARR
39	3256-22	2	Washer-Flat
40	3255-7	2	Washer-Lock/EXT
41	3217-5	2	Nut-Hex
42	100-1270	1	Switch-Proximity
99	3290-379	2	Tie-Cable

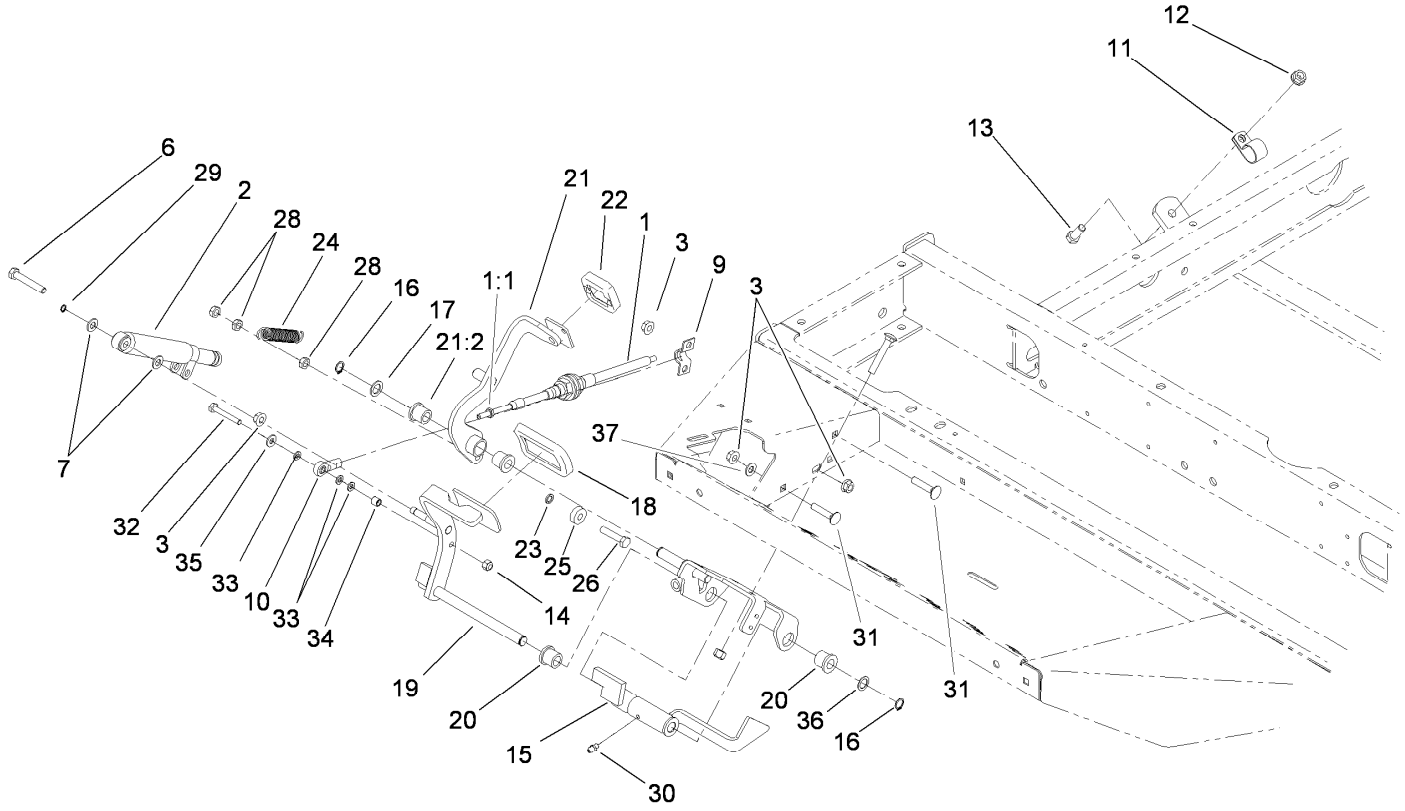

Traction Pedal Assembly

Ref.	Part Number	Qty.	Description
1	100-4815	1	Cable-Control, Traction
1:1	3220-1	2	Nut-Jam
2	76-8870	1	Damper-Lever
3	32128-20	5	Nut-HF
6	322-10	1	Screw-HH
7	3256-23	2	Washer-Flat
9	93-2092	1	Clamp-Cable
10	2411-41	1	Rod End-Ball Joint
11	2412-41	1	Clamp
12	3290-357	1	Nut-HHF, Whiz
13	323-6	1	Screw-HH
14	3296-42	1	Nut-Lock, NI
15	95-8861	1	Slide
16	32151-84	2	Ring-Shaft, EXT
17	41-8440	1	Washer
18	74-9100	1	Pad-Pedal, Forward
19	104-4852-03	1	Pedal-Traction
20	256-243	2	Bearing-Flange

Ref.	Part Number	Qty.	Description
21	99-3379	1	Pedal-Reverse
21:2	256-243	2	Bearing-Flange
22	74-9110	1	Pad-Pedal, Reverse
23	75-5470	1	Spacer-Bearing
24	99-3476	1	Spring-Extension
25	251-259	1	Bearing-Ball
26	322-7	1	Screw-HH
28	3296-47	3	Nut-Lock, NI
29	32151-3	1	Ring-Grip
30	302-5	1	Fitting-Grease
31	3230-27	1	Screw-CARR
32	321-10	1	Screw-HH
33	33093-00	3	Washer-Flat
34	99-3545	1	Spacer
35	3256-22	1	Washer-Flat
36	73-0040	4	Washer-Thrust
37	3256-24	1	Washer-Flat

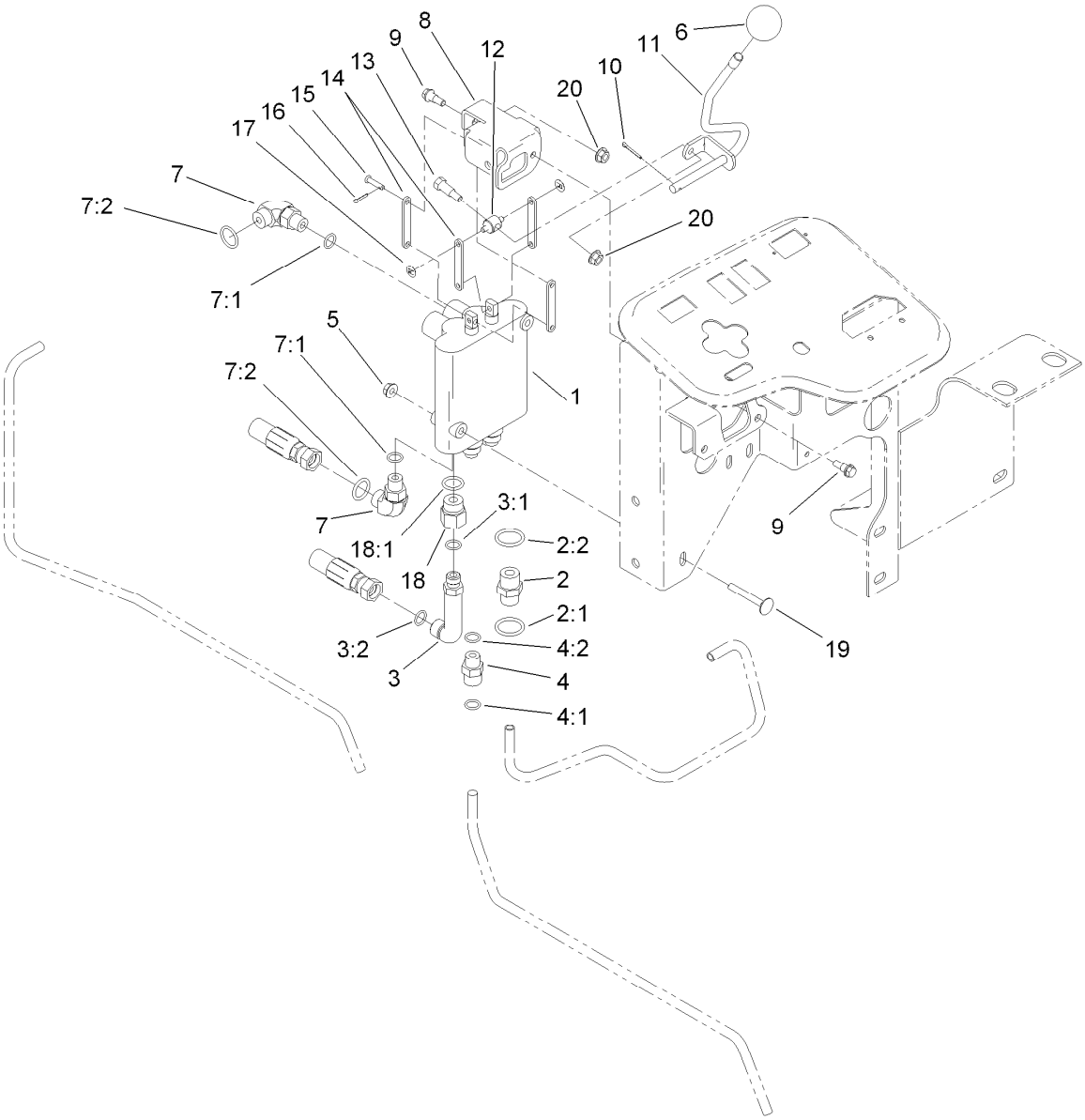

Control Valve Installation Assembly

Ref.	Part Number	Qty.	Description
1	95-8581	1	2-Spool Control Valve ASM
2	340-3	1	Adapter
2:1	237-22	1	O-Ring
2:2	237-79	1	O-Ring
3	69-4320	1	Fitting-HYD, 90 DEG
3:1	237-22	1	O-Ring
3:2	237-42	1	O-Ring
4	340-2	1	Fitting-HYD, Straight
4:1	237-22	1	O-Ring
4:2	237-42	1	O-Ring
5	32128-33	2	Nut-HF
6	233-42	1	Knob
7	340-77	2	Fitting-HYD, 90 DEG
7:1	237-22	1	O-Ring
7:2	237-42	1	O-Ring

Ref.	Part Number	Qty.	Description
8	95-8633	1	Bracket-Valve, Actuator
9	42-3560	2	Bolt-Shoulder
10	3272-6	1	Pin-Cotter
11	95-8635	1	Lever-Valve
12	95-8638	1	Trunnion-Valve, Actuator
13	92-8916	1	Bolt-Shoulder
14	95-8634	4	Link
15	283-16	3	Pin-Clevis
16	3272-1	3	Pin-Cotter
17	32151-106	2	Ring-Retaining
18	353-397	1	Reducer-Adapter
18:1	237-79	1	O-Ring
19	3230-33	2	Screw-CARR
20	32128-32	3	Nut-HHF

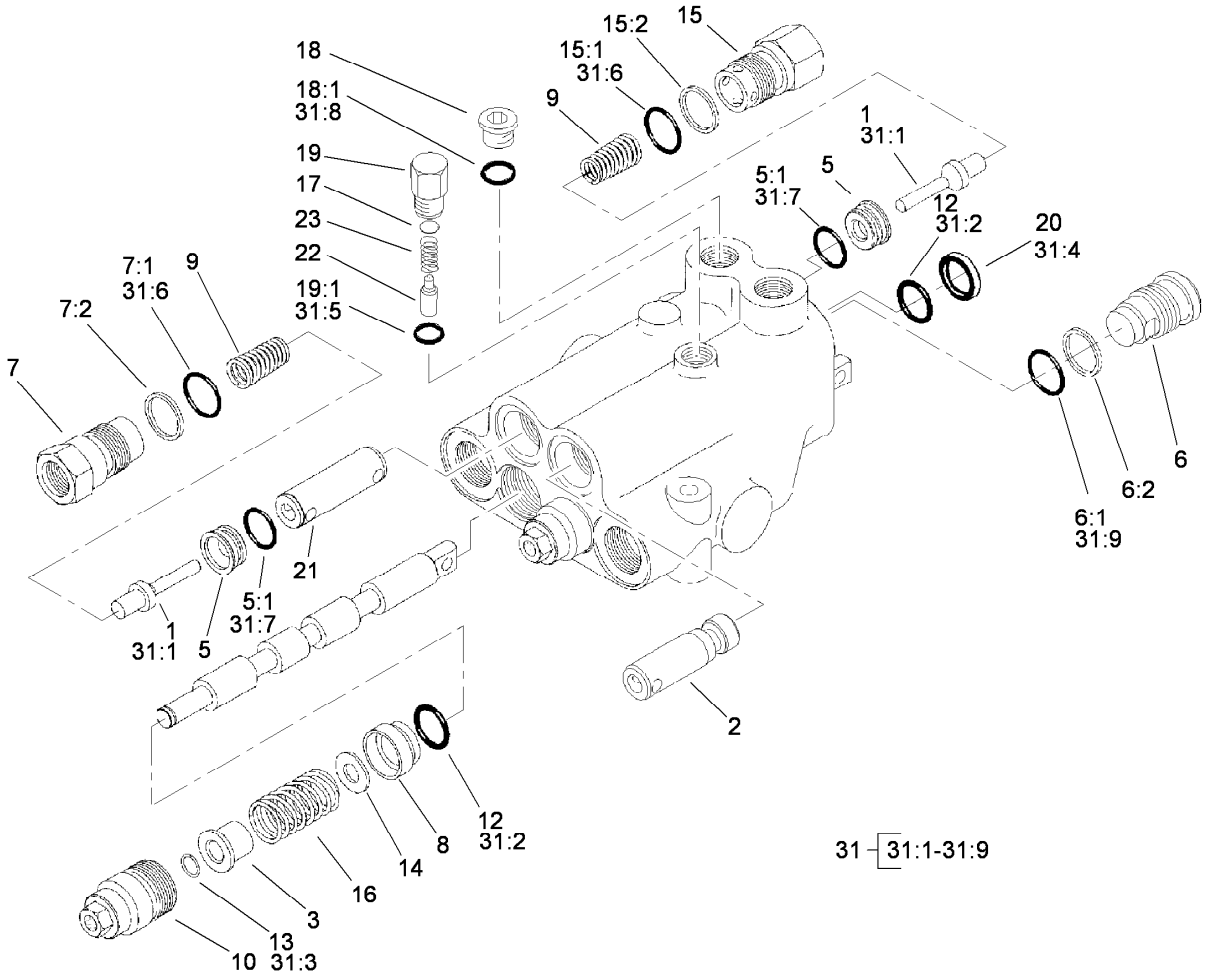

Valve Assembly No. 95-8581

Ref.	Part Number	Qty.	Description
1	58-6290	3	Poppet
2	69-1840	1	Plunger
3	58-6310	2	Spacer
5	58-6330	3	Seat
5:1	58-6340	1	O-Ring
6	58-6350	1	Plug
6:1	60-5720	1	O-Ring
6:2	58-6370	1	Washer
7	69-1800	2	Plug ASM
7:1	60-5720	1	O-Ring
7:2	58-6370	1	Washer
8	58-6400	2	Bushing
9	69-1810	3	Spring
10	58-6420	2	Cap
12	58-6450	4	O-Ring
13	58-6460	2	Ring-Retaining
14	65-2770	2	Washer
15	99-3526	1	Plug ASM
15:1	60-5720	1	O-Ring
15:2	59-7730	1	Washer-Backup

Ref.	Part Number	Qty.	Description
16	99-3531	2	Spring
17	60-6450	1	Disc
18	353-989	1	Plug-Hex, Hollow
18:1	237-42	1	O-Ring
19	58-6780	1	Plug
19:1	58-6790	1	O-Ring
20	58-6320	2	Wiper
21	99-3528	1	Plunger
22	58-6770	1	Plunger
23	58-6760	1	Spring
31	99-3530	1	Seal Kit
31:1	58-6290	3	Poppet
31:2	58-6450	4	O-Ring
31:3	58-6460	2	Ring-Retaining
31:4	58-6320	2	Wiper
31:5	58-6790	1	O-Ring
31:6	60-5720	4	O-Ring
31:7	58-6340	2	O-Ring
31:8	237-42	1	O-Ring
31:9	59-7730	2	Washer-Backup

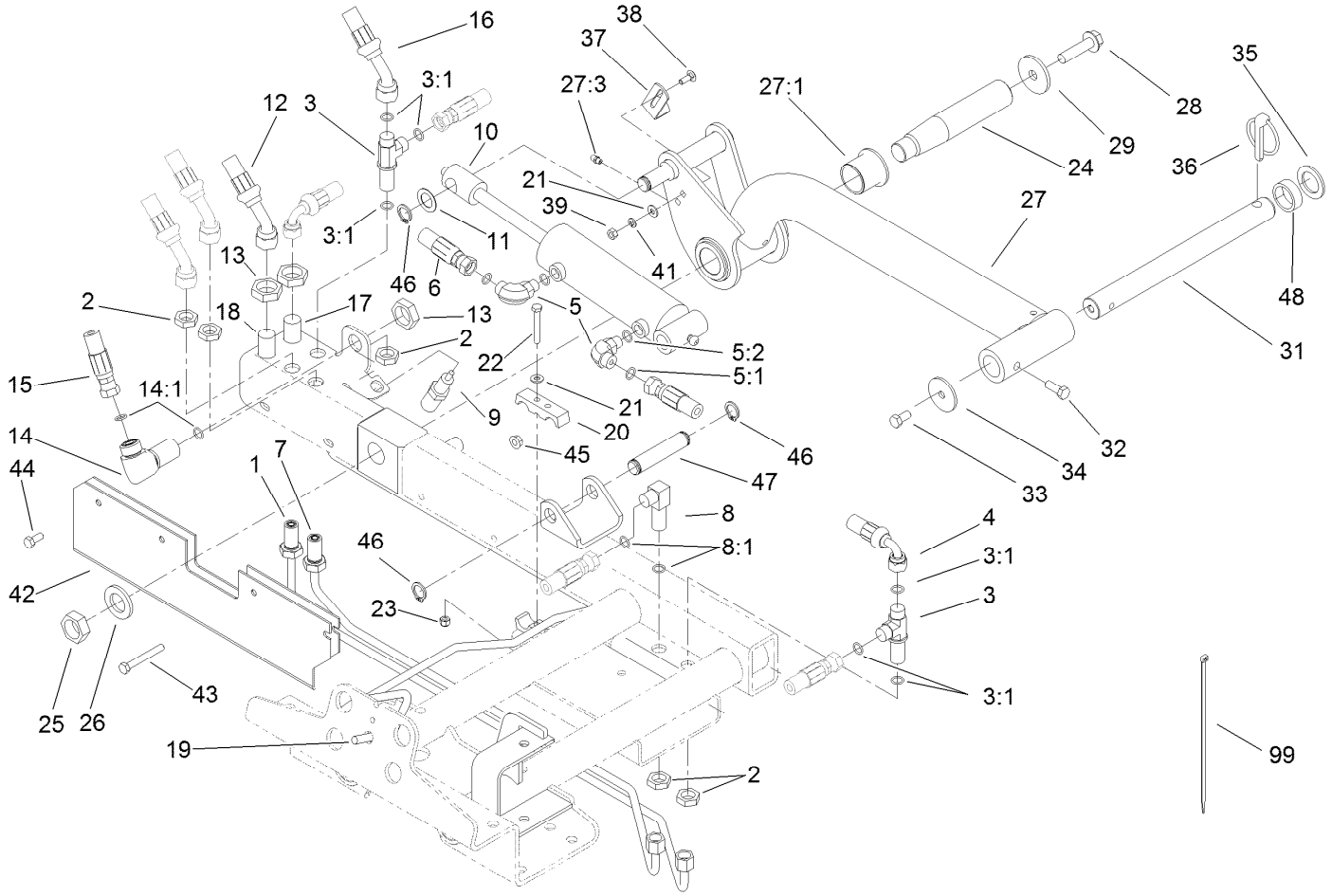

Rear Lift Arm Assembly

Ref.	Part Number	Qty.	Description
1	95-8984	1	Tube ASM
2	340-70	5	Nut-Lock
3	340-68	2	Fitting-Tee, Bulkhead
3:1	237-22	3	O-Ring
4	95-8831	1	Hose ASM
5	340-77	2	Fitting-HYD, 90 DEG
5:1	237-22	1	O-Ring
5:2	237-42	1	O-Ring
6	95-8823	1	Hose ASM
7	95-8983	1	Tube ASM
8	340-154	1	Union-Bulkhead
8:1	237-22	2	O-Ring
9	93-6762	1	Switch-Ball
10	112-9916	1	HYD Cylinder ASM
11	3-6498	1	Washer-Thrust
12	95-8820	1	Hose ASM
13	340-127	3	Nut-Bulkhead
14	93-9151	1	Fitting-HYD
14:1	237-30	2	O-Ring
15	95-8824	1	Hose ASM
16	115-3411	1	Hose-HYD

Ref.	Part Number	Qty.	Description
17	95-8980	1	Tube ASM
18	95-8981	1	Tube ASM
19	95-8982	1	Tube ASM
20	93-2509	2	Clamp-Tube
21	3256-22	6	Washer-Flat
22	321-11	2	Screw-HH
23	3296-42	2	Nut-Lock, NI
24	95-8990	1	Shaft-Pivot, Rear
25	3220-9	1	Nut-Jam
26	86-1480	1	Washer
27	115-3475	1	Rear Liftarm ASM
27:1	69-6470	2	Bushing-Castor
27:3	302-5	1	Fitting-Grease
28	3234-27	1	Screw-HHF
29	75-7730	1	Washer-Thrust
31	104-1392	1	Shaft-Pivot
32	323-6	1	Screw-HH
33	323-4	1	Screw-HH
34	63-7400	1	Washer-Rebound
35	3-6781	1	Washer-Thrust
36	283-71	1	Pin-Lynch

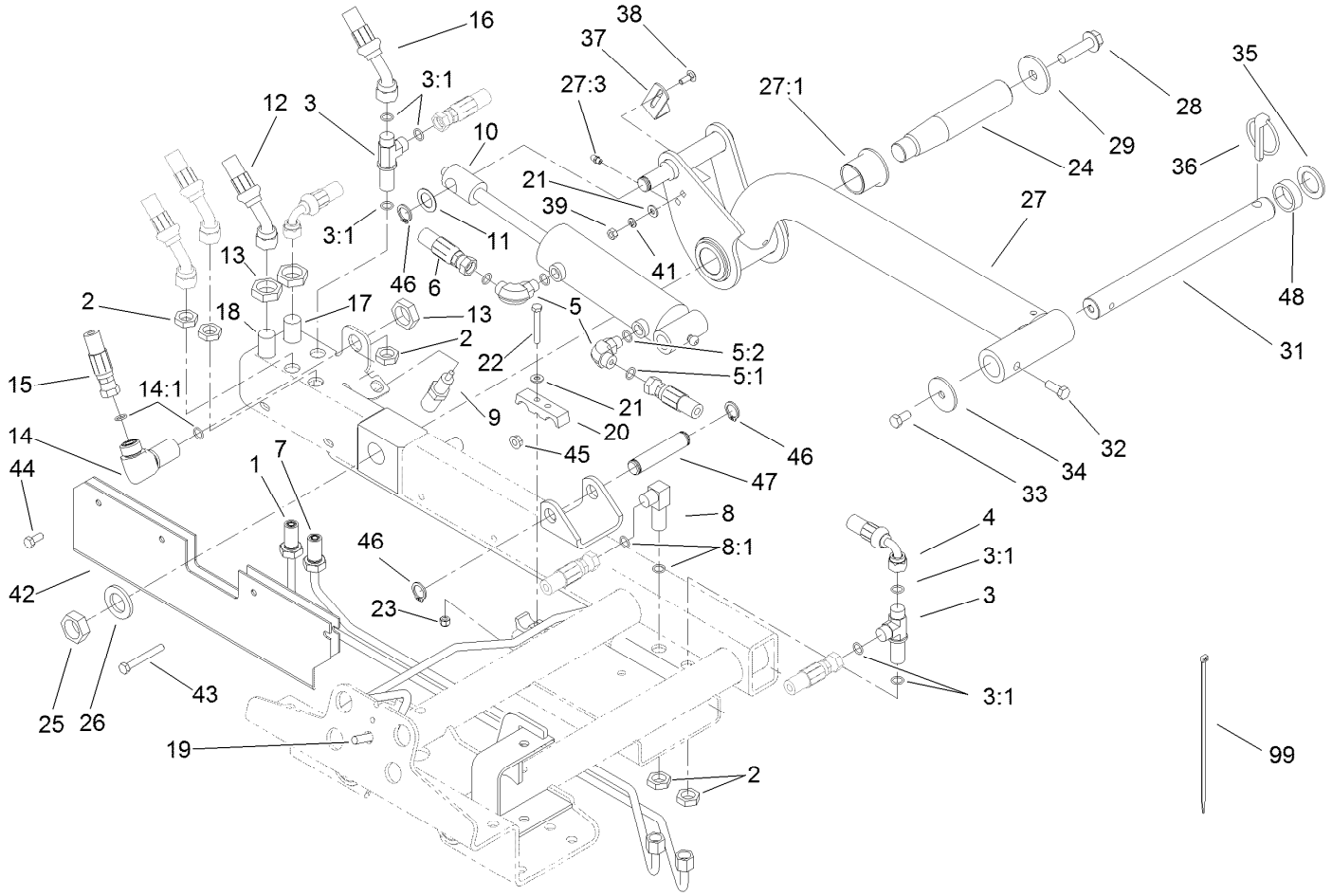

Rear Lift Arm Assembly (continued)

Ref.	Part Number	Qty.	Description
37	95-8613	1	Bracket-Switch
38	3229-1	2	Bolt-CARR
39	3217-5	2	Nut-Hex
41	3253-3	2	Washer-Lock
42	104-0453-03	1	Guard
43	322-12	2	Screw-HH
44	322-3	2	Screw-HH

Ref.	Part Number	Qty.	Description
45	32128-20	4	Nut-HF
46	32120-93	3	Ring-Retaining
47	95-8575	1	Pin
48	63-0070	1	Spacer
99	3290-379	1	Tie-Cable
99	3334-945	1	Tie-Cable

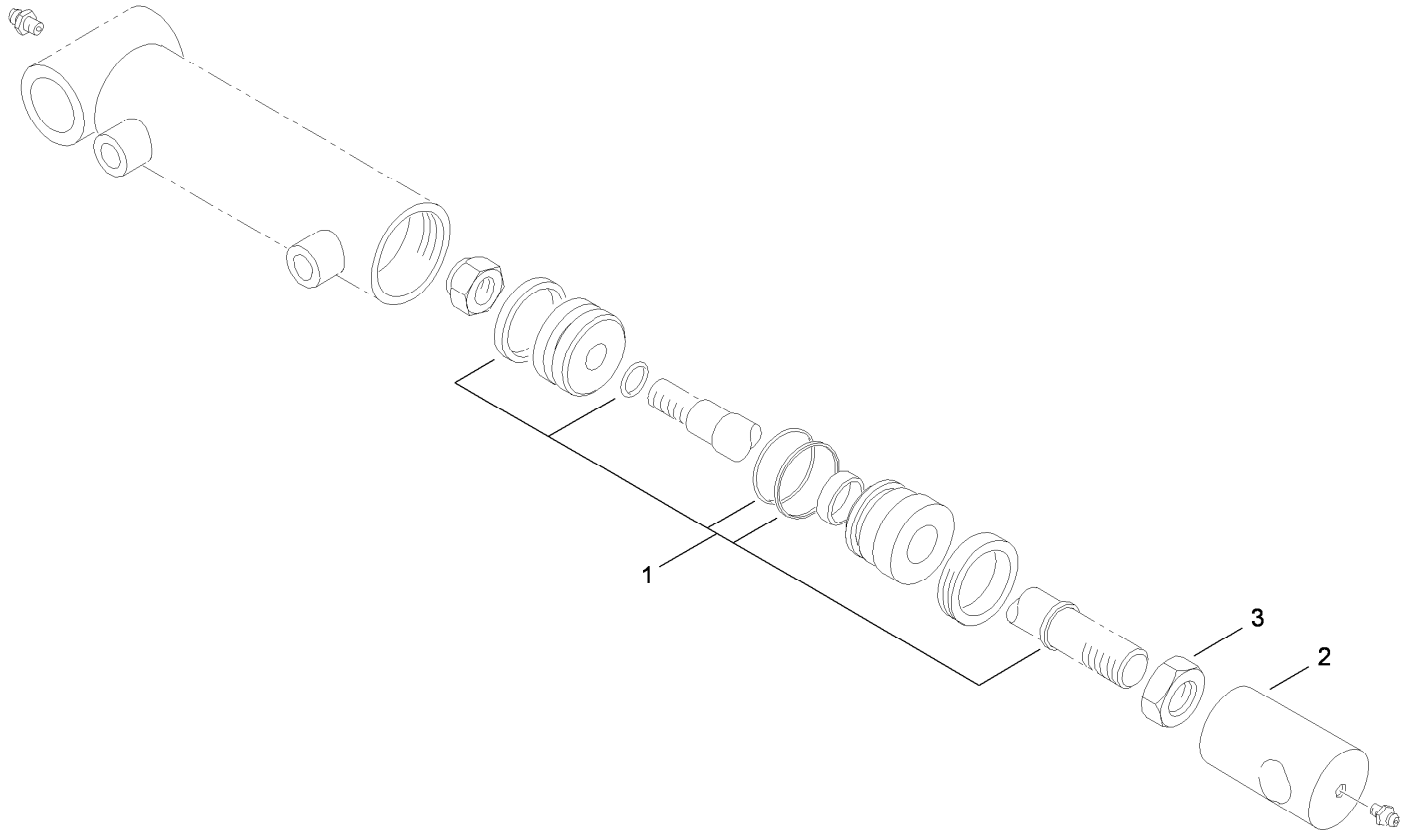

Hydraulic Cylinder Assembly No. 112-9916

Ref.	*Part Number*	*Qty.*	*Description*
1	115-3410	1	Seal Kit
2	108-9035	1	Clevis
3	3220-7	1	Nut-Jam

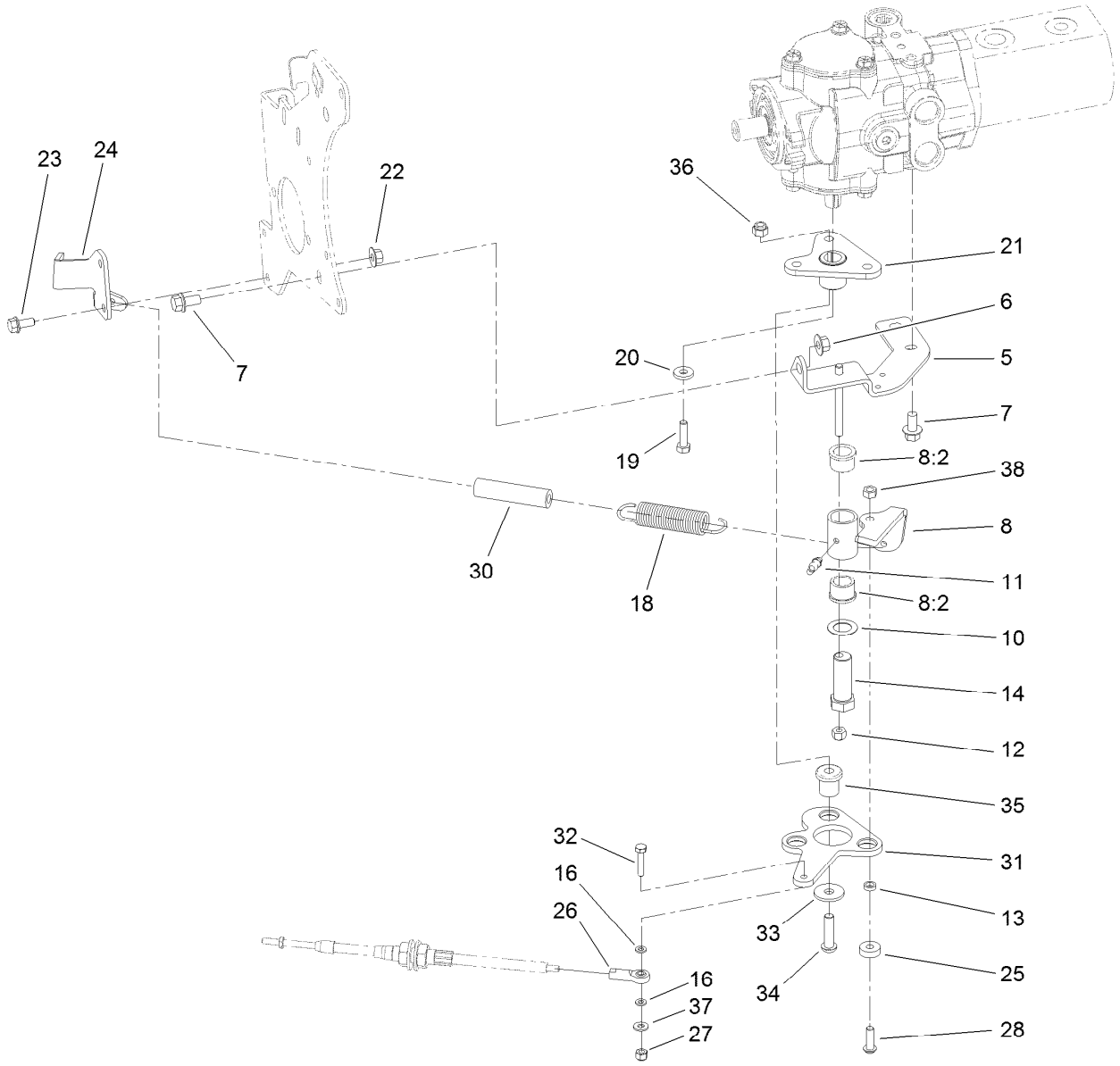

Neutral Arm Assembly

Ref.	Part Number	Qty.	Description
5	95-8960-03	1	Bracket-Neutral
6	32128-43	1	Nut-Flange
7	3234-1	3	Screw-HHF
8	104-0422	1	Neutral Arm ASM
8:2	256-113	2	Bushing-Flange
10	3-6498	1	Washer-Thrust
11	302-60	1	Fitting-Grease
12	3296-29	1	Nut-Lock, NI
13	100-4817	1	Spacer-Bearing
14	76-8640	1	Stud-Traction
16	33093-00	2	Washer-Flat
18	94-1369	1	Spring-Extension
19	3210-6	1	Screw-HH
20	88-7200	1	Washer-Flat
21	99-3598-03	1	Hub
22	32128-44	2	Nut

Ref.	Part Number	Qty.	Description
23	3234-5	2	Screw-HHF
24	104-0464-03	1	Bracket-Support, Cable
25	251-259	1	Bearing-Ball
26	2411-41	1	Rod End-Ball Joint
27	3296-42	1	Nut-Lock, NI
28	3274-104	1	Screw-HSBH
30	99-3556	1	Hose
31	99-3594-03	1	Lever-Pump
32	321-8	1	Screw-HH
33	2844	3	Washer
34	95-3857	3	Screw-HSBH
35	63-9750	3	Mount
36	3296-39	3	Nut-Lock, NI
37	3256-22	1	Washer-Flat
38	32153-3	1	Nut-Hex, Side Deform

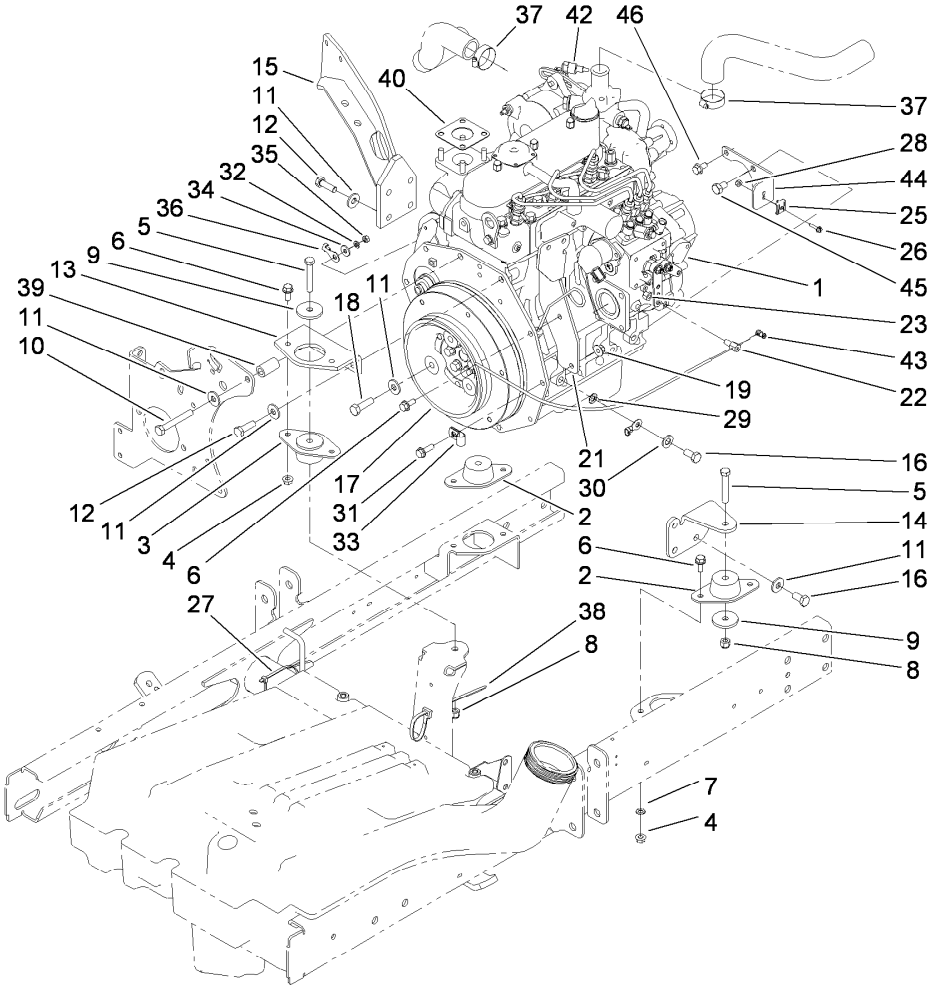

Engine Assembly

Ref.	Part Number	Qty.	Description
1	112-9906	1	Engine ASM
2	83-1030	2	Mount-Engine
3	93-5265	1	Mount-Engine
4	32128-20	6	Nut-HF
5	323-11	3	Screw-HH
6	3234-5	7	Screw-HHF
7	3255-8	1	Washer-Lock
8	3296-39	3	Nut-Lock, NI
9	80-8560	3	Washer-Hardened
10	42-9370	1	Screw-HH
11	80-6990	12	Washer-Hardened
12	95-8812	5	Screw-HH
13	95-8926-03	1	Mount-Engine, Front
14	95-8937-03	1	Mount-Engine, LH
15	100-4838-03	1	Mount-Engine
16	63-7790	4	Screw-Cap
17	99-3412-03	1	Pulley
18	56-2140	3	Screw-HH
19	32128-44	2	Nut
21	115-3487-03	1	Bracket-Mount, Fuel Filter
22	98-9311	1	Swivel-Throttle
23	3296-20	1	Nut-Lock, NI

Ref.	Part Number	Qty.	Description
25	81-1690	1	Clamp-Cable
26	32105-13	1	Screw-HWH
27	3290-379	2	Tie-Cable
28	3296-2	1	Nut-Lock, NI
29	3255-9	1	Washer-Lock
30	3256-25	1	Washer-Flat
31	3234-17	1	Screw-HHF
32	3256-78	1	Washer-Flat
33	2412-10	1	R-Clamp
34	43-5930	1	Washer-Lock, Spring
35	48-7890	1	Nut-Hex
36	99-3441	1	Harness-Wire, Fusible Link
37	2412-34	2	Clamp-Hose
38	3290-378	1	Tie-Cable
39	95-8736	1	Spacer
40	98-9611	1	Gasket
42	99-3582	1	Thermoswitch
43	112-9919	1	Stop-Cable, Throttle
44	110-9009-03	1	Bracket-Cable, Throttle
45	70-8470	1	Screw-HH
46	33104-016	1	Screw-HHF

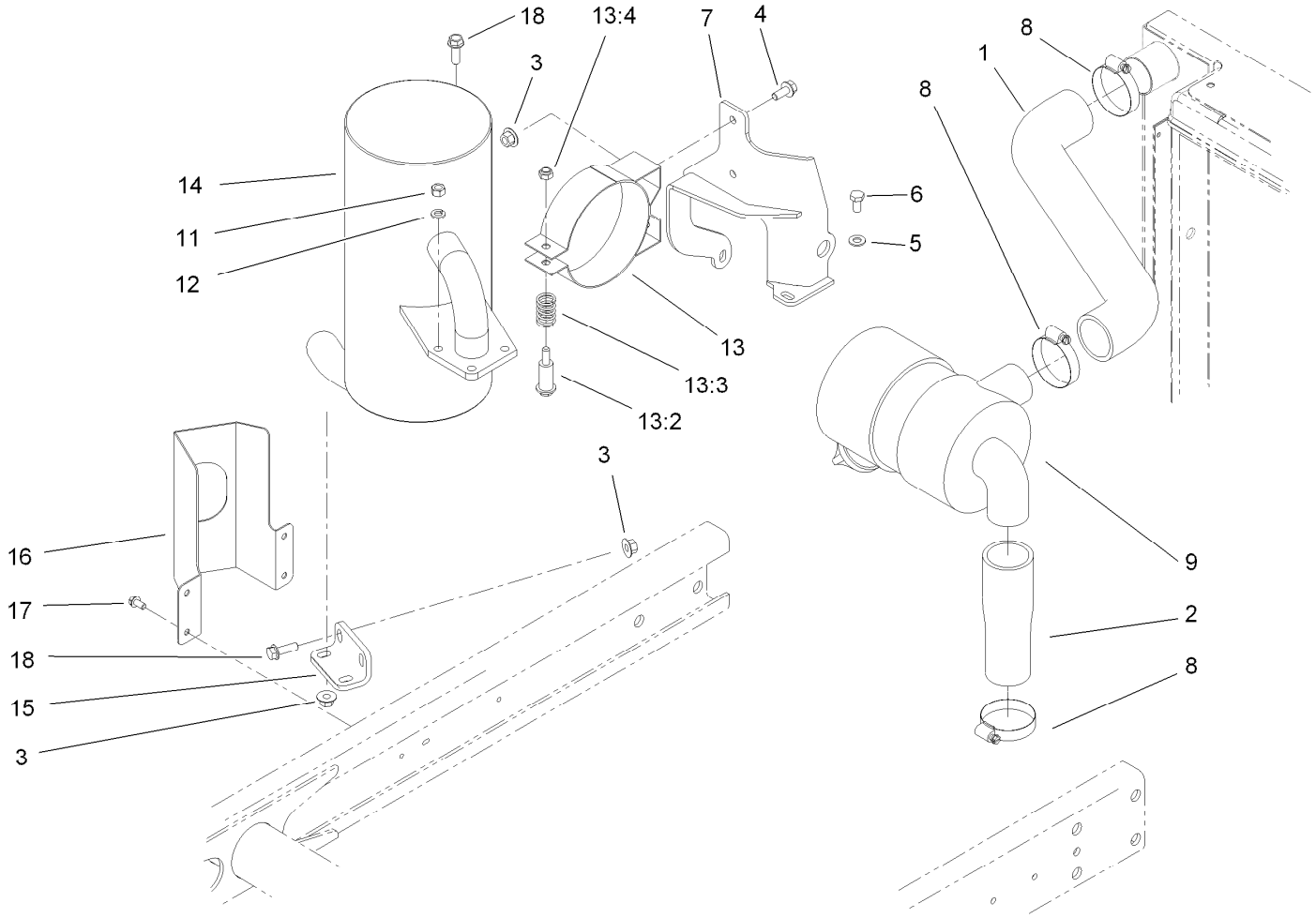

Air Cleaner and Muffler Assembly

Ref.	Part Number	Qty.	Description
1	95-8946	1	Hose-Upper, Air Inlet
2	95-8947	1	Hose-Air Inlet, Lower
3	32128-44	6	Nut
4	3234-5	3	Screw-HHF
5	3256-23	2	Washer-Flat
6	33114-016	2	Screw-HH
7	99-3355-03	1	Bracket-Filter, Air
8	2412-92	4	Clamp-Hose
9	93-2190	1	Air Cleaner ASM
11	33014-00	4	Nut-Hex
12	3253-4	4	Washer-Lock

Ref.	Part Number	Qty.	Description
13	93-2191	1	Mounting Band ASM (Air Cleaner)
13:2	94-3653	1	Bolt
13:3	94-3654	1	Spring
13:4	48-9510	1	Nut
14	104-4834	1	Muffler
15	95-8943-03	1	Bracket-Muffler
16	99-3425-03	1	Guard-Exhaust
17	32144-4	4	Screw-HWH
18	3234-17	3	Screw-HHF

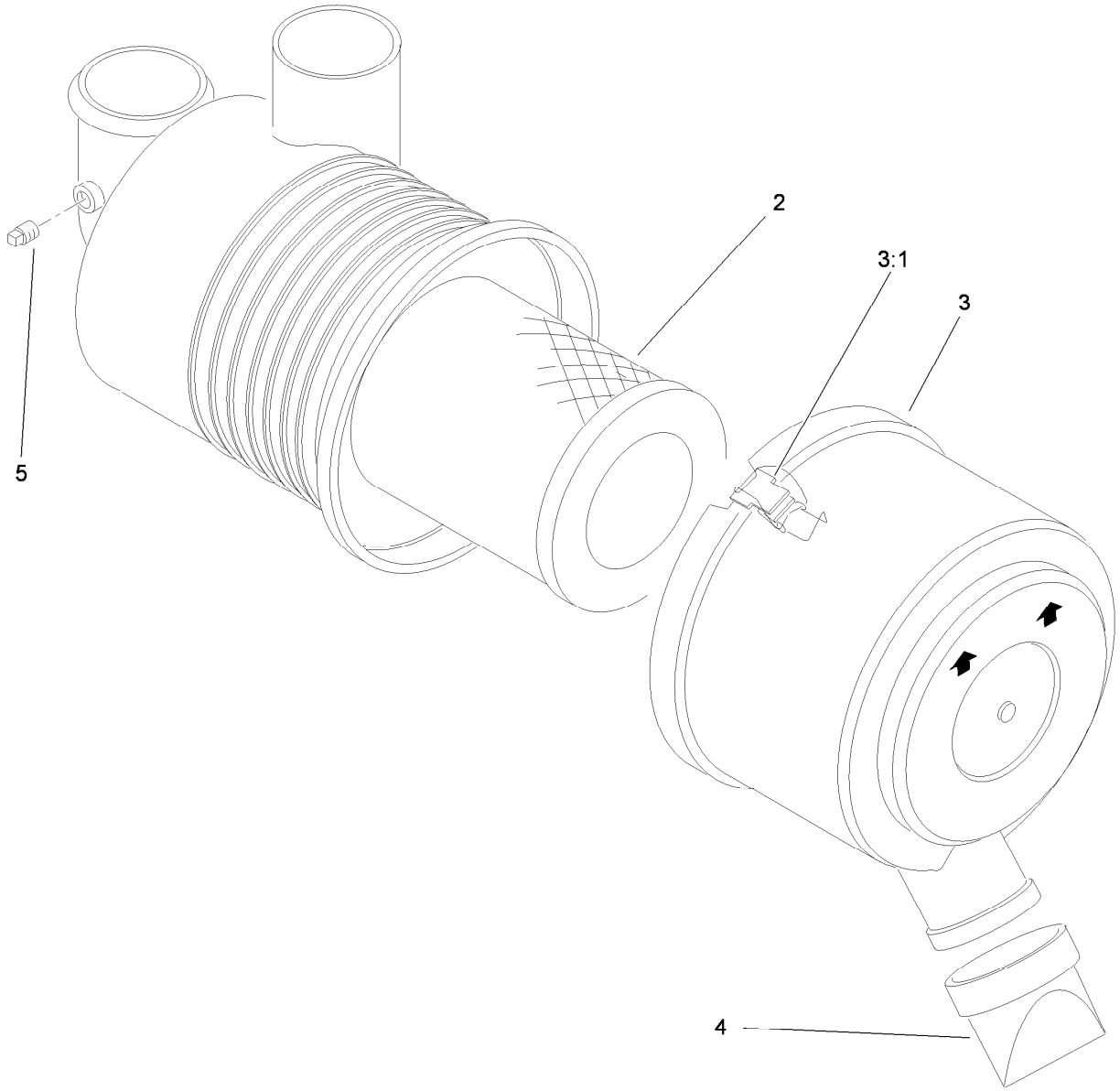

Air Cleaner Assembly No. 93-2190

Ref.	*Part Number*	*Qty.*	*Description*
2	108-3811	1	Filter-Air
3	94-3652	1	Cover ASM
3:1	1-643283	2	Latch-Cleaner, Air
4	87-9400	1	Valve-Vacuator
5	285-17	1	Plug-Pipe

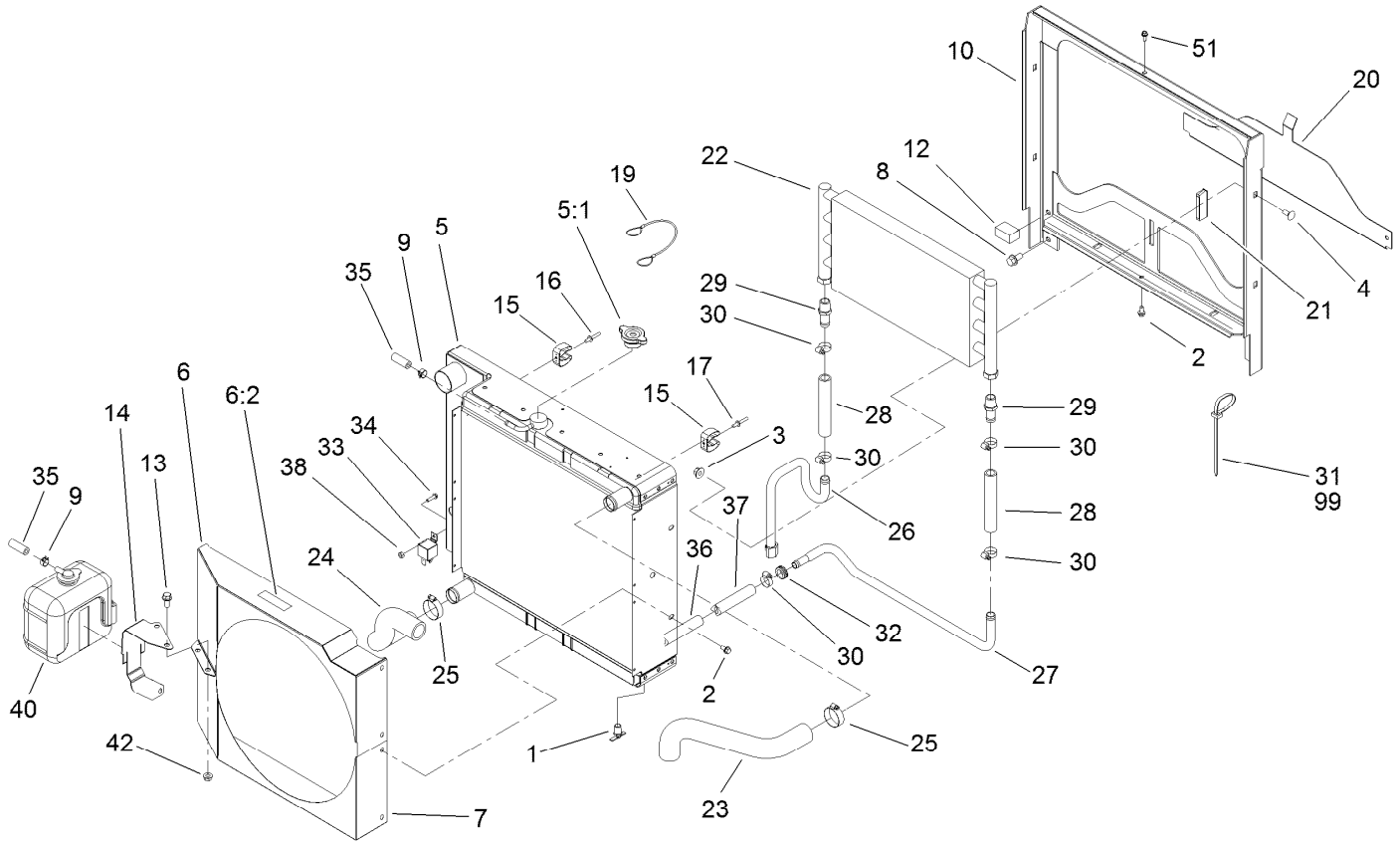

Radiator Assembly

Ref.	Part Number	Qty.	Description
1	304-46	1	Draincock
2	32104-116	10	Screw-HF
3	32128-44	4	Nut
4	3230-1	4	Bolt-CARR
5	95-8934	1	Radiator
5:1	93-5957	1	Cap-Radiator
6	99-3580	1	Shroud-Fan, Top
6:2	93-6681	1	Decal-Warning, Fan
7	99-3360-03	1	Shroud-Fan, Bottom
8	3234-1	4	Screw-HHF
9	92-2379	2	Clamp-Hose
10	100-4903-03	1	Frame-Radiator
12	95-8962	2	Seal-Foam, Radiator
13	3234-5	2	Screw-HHF
14	95-8879-03	1	Bracket-Reservoir
15	95-8939	2	Spring-Clip
16	3269-22	1	Rivet-Pop
17	3269-23	1	Rivet-Pop

Ref.	Part Number	Qty.	Description
19	99-3390	1	Lanyard
20	95-8702-03	1	Shield-Radiator, Lower
21	99-3497	1	Magnet
22	75-1040	1	Cooler-Oil
23	95-8944	1	Hose-Radiator, Upper
24	95-8945	1	Hose-Radiator, Lower
25	2412-111	2	Clamp
26	95-8704	1	Tube-HYD
27	95-8705	1	Tube-HYD
28	95-8706	2	Hose-HYD
29	95-8710	2	Fitting-Barb
30	2412-129	5	Clamp-Hose
31	3290-378	2	Tie-Cable
32	99-3481	2	Grommet
33	99-7435	1	Relay-Power
34	32105-13	1	Screw-HWH
35	109-0274	1	Hose-Fuel
36	56-7985	1	Sleeve-Protective

● Not illustrated

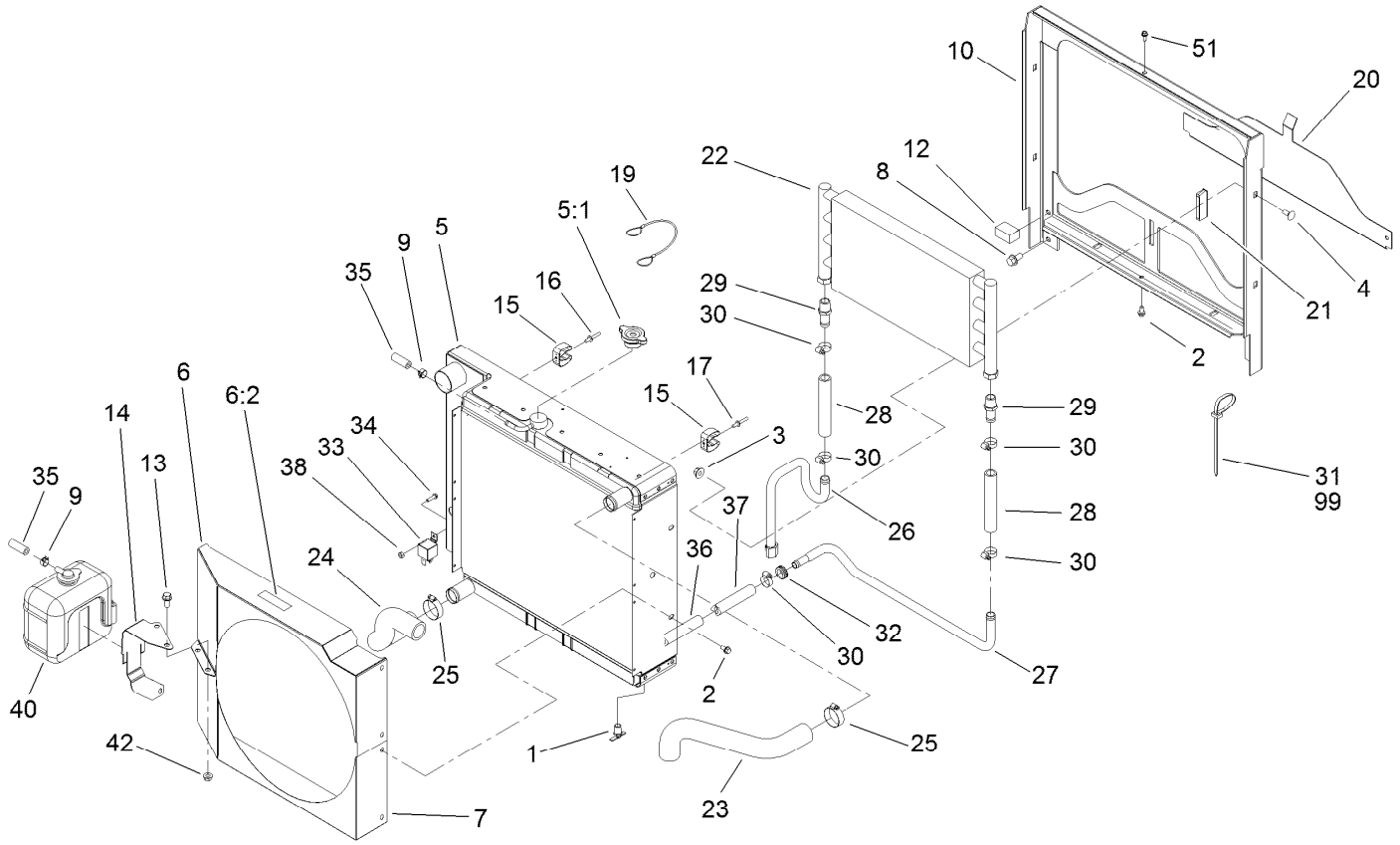

Radiator Assembly (continued)

Ref.	Part Number	Qty.	Description
37	99-3500	1	Hose
38	3296-2	1	Nut-Lock, NI
40	104-9318	1	Bottle-Overflow
42	32128-20	2	Nut-HF
51	119-2038	1	Screw-HWH
99	3290-379	1	Tie-Cable ●

● Not illustrated

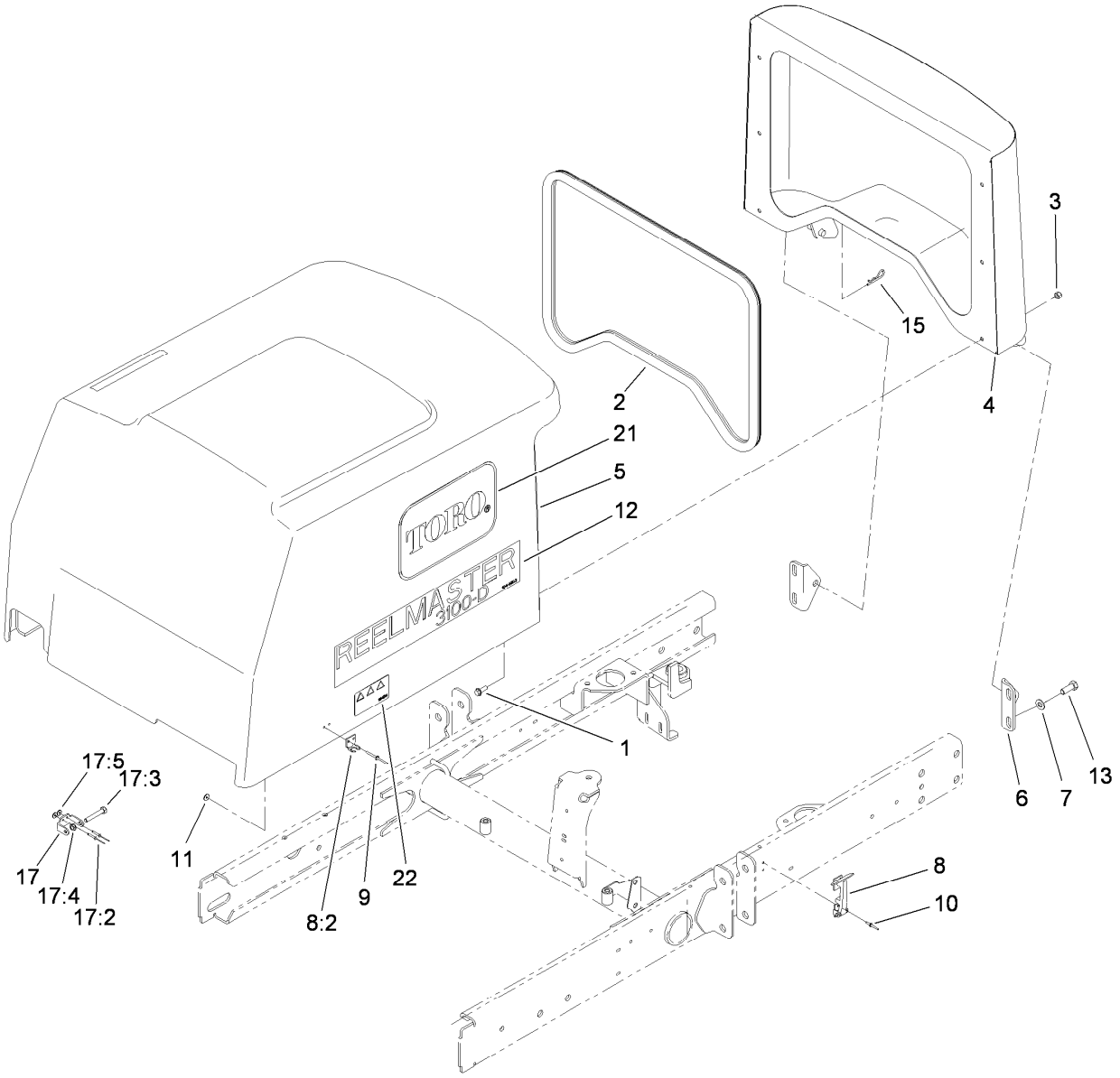

Hood Assembly

Ref.	Part Number	Qty.	Description
1	3234-4	6	Screw-HHF
2	95-8809	1	Trim-Seal
3	3296-42	6	Nut-Lock, NI
4	95-8724-03	1	Screen-Hood
5	95-8935	1	Hood ASM
5:1	106-8114	1	Heat Tape Repair Kit ●
6	95-8728	2	Bracket-Pivot, Hood
7	3256-24	8	Washer-Flat
8	59-9740	2	Flex Draw Latch ASM
8:2	249-40	1	Keeper
9	107-0333	4	Rivet-Pop
10	3290-55	4	Rivet-Pop
11	3269-10	4	Washer-Back
12	104-5153	2	Decal-Hood
13	323-6	4	Screw-HH
15	3290-467	1	Pin-Hair
17	119-2004	1	Ce Latch Kit
17:2	107-0333	2	Rivet-Pop
17:3	322-10	1	Screw-HH
17:4	3296-47	1	Nut-Lock, NI
17:5	3269-10	2	Washer-Back
21	66-6140	2	Decal
22	106-6754	1	Decal-Danger

● Not illustrated

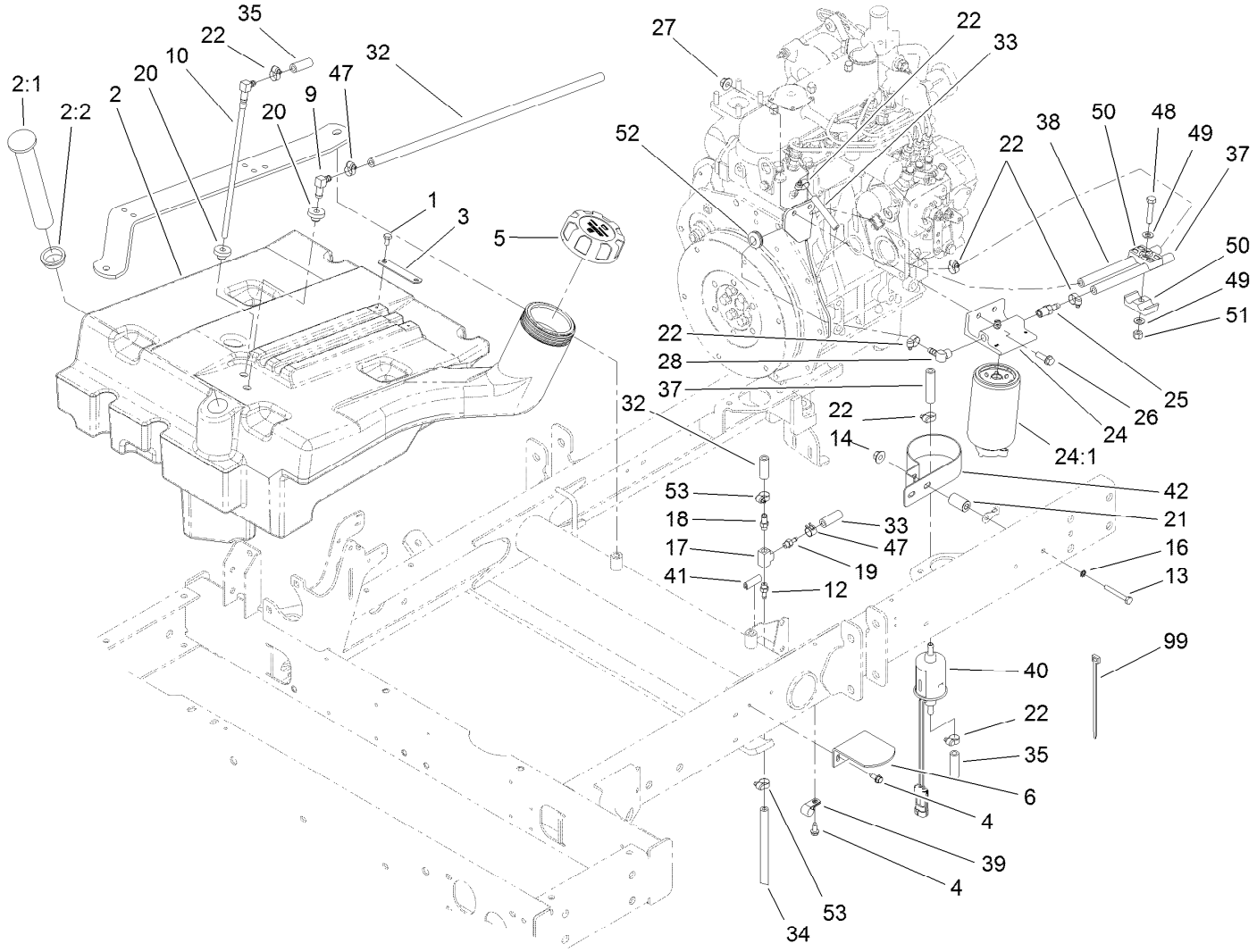

Fuel System Assembly

Ref.	Part Number	Qty.	Description
1	321-2	2	Screw-HH
2	95-8620	1	Tank-Fuel
2:1	95-8971	1	Guage-Fuel
2:2	95-8972	1	Grommet
3	95-8881	1	Strap-Line, Fuel
4	32144-10	3	Screw-HWH
5	114-5064	1	Cap-Biodiesel
6	95-8968-03	1	Support-Tank, Fuel
9	46-6550	1	Fitting-Elbow, 90 DEG
10	110-9689	1	Pipe-Stand
12	304-73	1	Connector-Hose
13	321-14	1	Screw-HH
14	32128-33	1	Nut-HF
16	3256-22	1	Washer-Flat
17	354-20	1	Fitting-Tee
18	354-21	1	Fitting-Barbed
19	354-22	1	Fitting-Barbed
20	46-6560	2	Bushing
21	77-3180	1	Spacer
22	92-2379	7	Clamp-Hose
24	110-9044	1	Seperator Filter ASM

Ref.	Part Number	Qty.	Description
24:1	110-9049	1	Filter-Spin On
25	353-783	1	Fitting-Straight
26	3234-17	2	Screw-HHF
27	32128-44	2	Nut
28	353-781	1	Fitting-Elbow
32	110-6187	1	Hose-Fuel
33	110-8751	1	Hose-Fuel
34	110-5701	1	Hose-Fuel
35	110-4100	1	Hose-Fuel
37	110-4109	1	Hose-Fuel
38	110-4113	1	Hose-Fuel
39	2412-73	1	Clamp-R
40	110-8806	1	Pump-Fuel
41	110-8754	1	Trim
42	110-8817	1	Bracket-Pump, Fuel
47	2412-80	2	Clamp-Hose
48	322-8	1	Screw-HH
49	3256-23	2	Washer-Flat
50	56-7971	2	Clamp-Tube
51	3296-29	1	Nut-Lock, NI
52	1-543296	1	Grommet

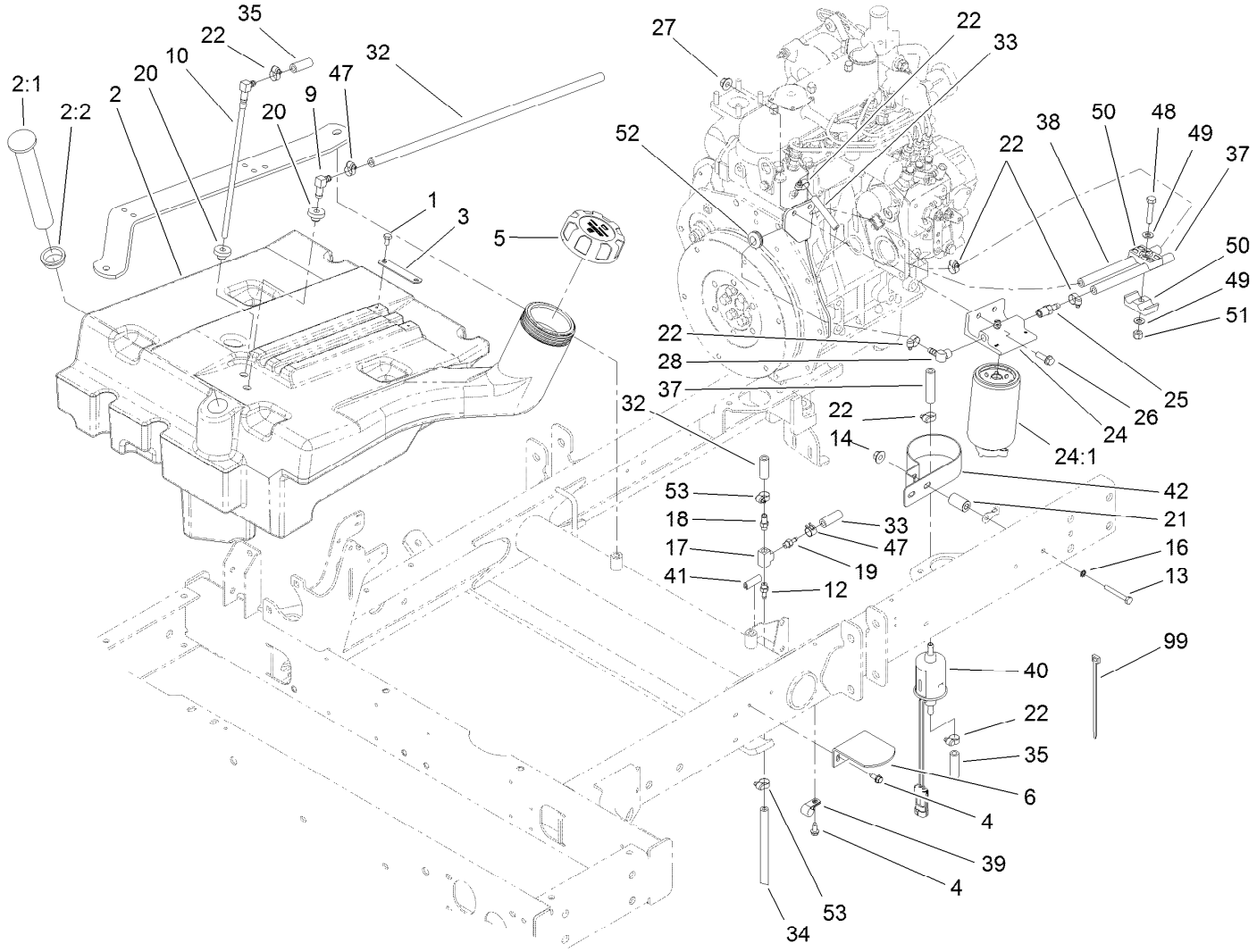

Fuel System Assembly (continued)

Ref.	*Part Number*	*Qty.*	*Description*
53	2412-108	2	Clamp-Worm
99	3290-379	2	Tie-Cable

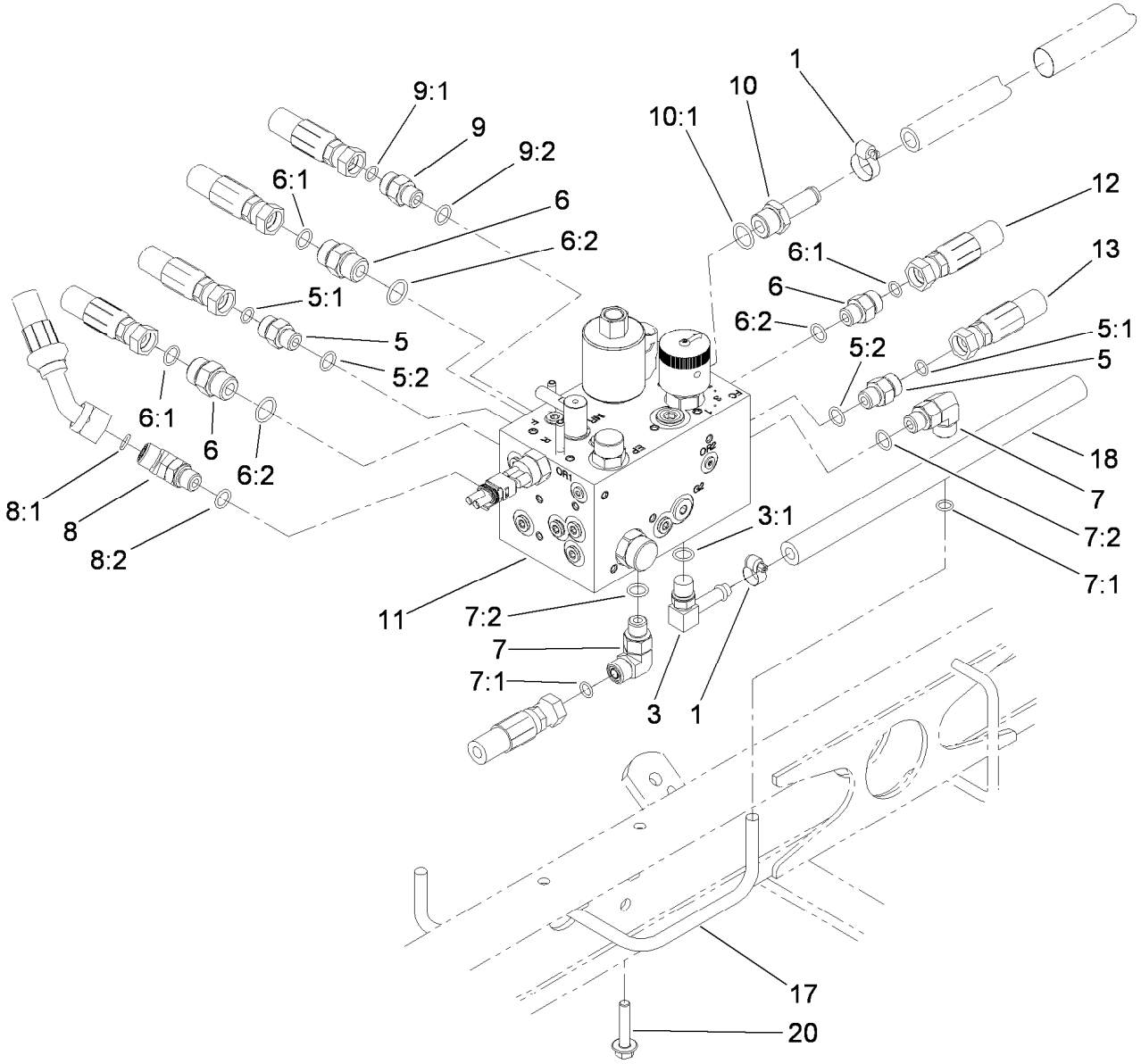

Manifold Block Assembly

Ref.	Part Number	Qty.	Description
1	2412-36	2	Clamp-Hose
3	100-4887	1	Fitting-Barbed, 90 DEG
3:1	237-42	1	O-Ring
5	340-2	2	Fitting-HYD, Straight
5:1	237-22	1	O-Ring
5:2	237-42	1	O-Ring
6	340-4	3	Fitting-HYD, Straight
6:1	237-30	1	O-Ring
6:2	237-79	1	O-Ring
7	340-77	2	Fitting-HYD, 90 DEG
7:1	237-22	1	O-Ring
7:2	237-42	1	O-Ring
8	340-87	1	Fitting-HYD, 45 DEG

Ref.	Part Number	Qty.	Description
8:1	237-22	1	O-Ring
8:2	237-42	1	O-Ring
9	340-92	1	Fitting-HYD, Straight
9:1	237-78	1	O-Ring
9:2	237-21	1	O-Ring
10	354-121	1	Fitting-Straight
10:1	237-79	1	O-Ring
11	108-9037	1	Manifold ASM
12	95-8829	1	Hose ASM
13	106-4197	1	Hose ASM
17	95-8792	1	Tube ASM
18	80-7342	1	Hose-HYD
20	104-8300	2	Nut-Flange, NI

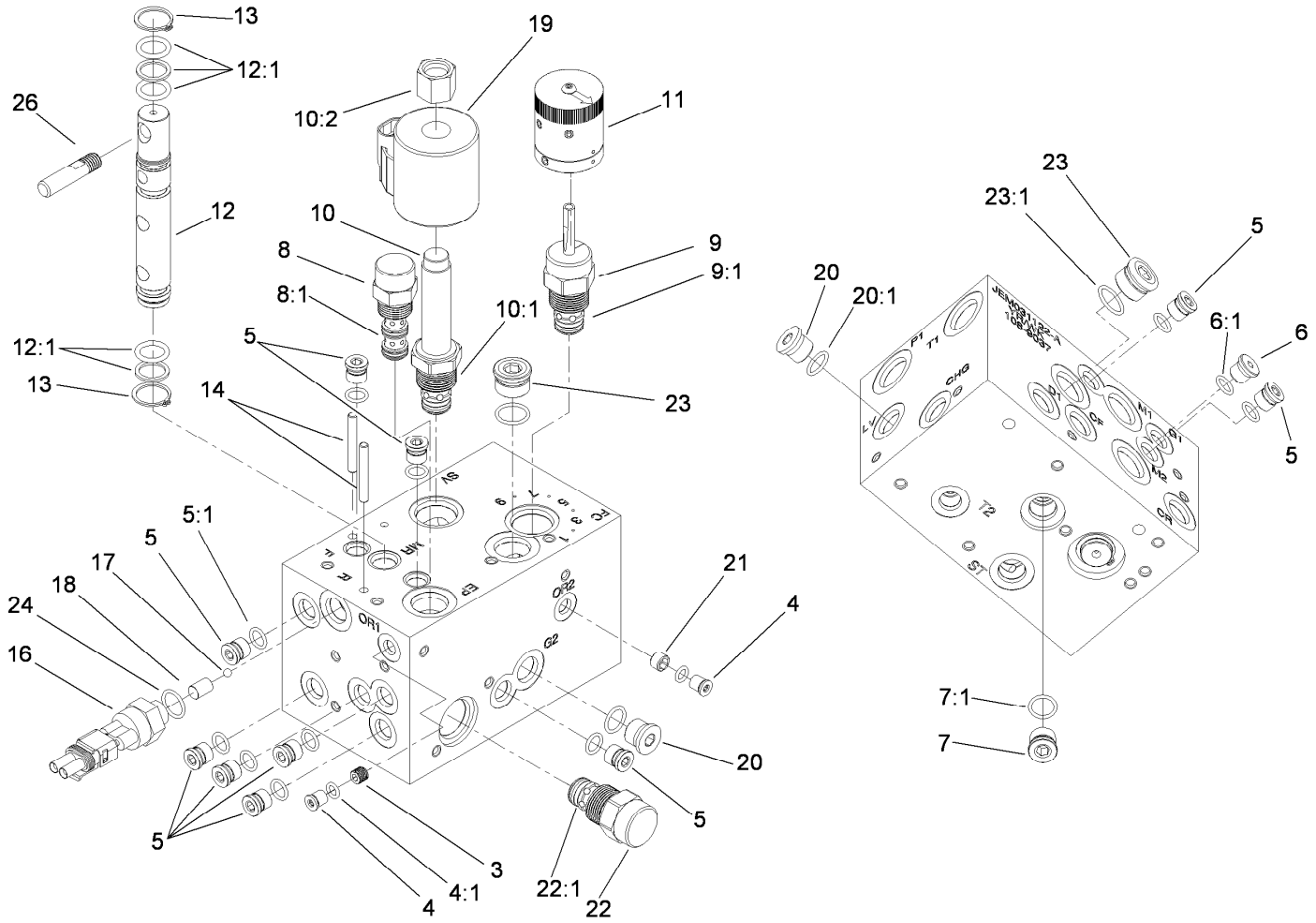

Hydraulic Manifold Assembly No. 108-9037

Ref.	Part Number	Qty.	Description
3	110-8771	1	Orifice-.020
4	106-1024	2	Plug-Leak, Zero
4:1	237-156	1	O-Ring
5	106-1025	10	Plug-HYD
5:1	237-78	1	O-Ring
6	353-512	1	Plug
6:1	237-78	1	O-Ring
7	106-1026	1	Plug-HYD
7:1	237-42	1	O-Ring
8	110-8770	1	Logic Element
8:1	110-8773	1	Seal Kit
9	110-8769	1	Valve-Control, Manual Flow
9:1	110-2633	1	Seal Kit
10	110-8768	1	Valve-Relief, Solenoid
10:1	110-6316	1	Seal Kit ●
10:2	110-2635	1	Nut-Coil
11	110-8767	1	Rotary Handle ASM

Ref.	Part Number	Qty.	Description
12	117-0108	1	Spool-Rotary
12:1	117-0109	1	Seal Kit
13	112-6532	2	Ring-Retaining
14	112-6531	2	Pin-Spring
16	72-4310	1	Switch-Ball
17	110-8762	1	Ball-Chrome
18	110-8761	1	Pin-Dowel
19	110-6344	1	Coil-12V, Dc
20	353-508	2	Plug-HH
20:1	237-42	1	O-Ring
21	110-8760	1	Orifice-.073
22	110-8759	1	Valve-Check
22:1	110-8772	1	Seal Kit ●
23	106-1027	2	Plug-HYD
23:1	237-79	1	O-Ring
24	110-8757	1	O-Ring
26	110-8758	1	Handle-Spool

● Not illustrated

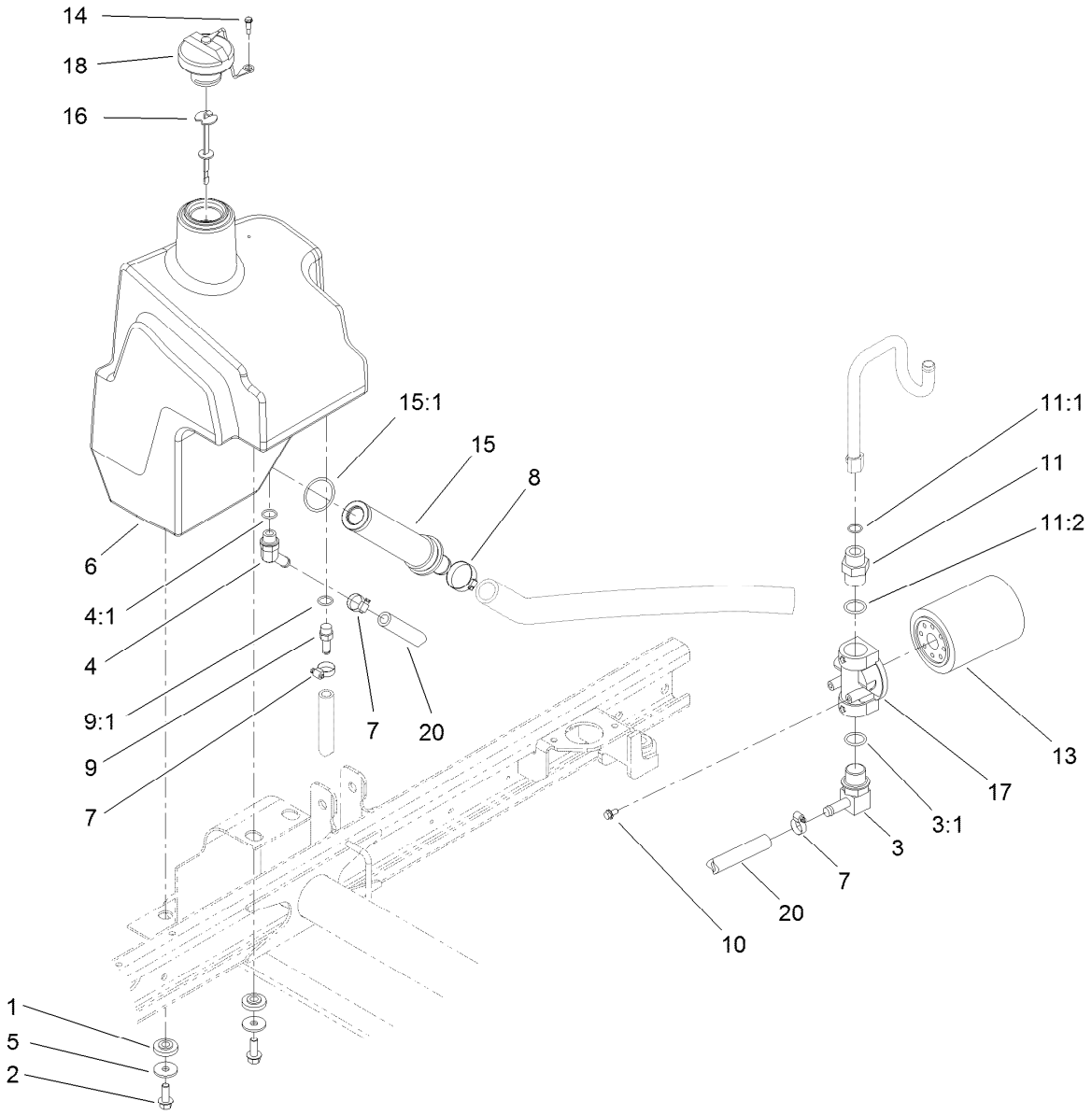

Hydraulic Tank Assembly

Ref.	Part Number	Qty.	Description
1	240-11	4	Bushing-Flange
2	3234-11	4	Screw-HHF
3	95-8814	1	Fitting-Barbed, 90 DEG
3:1	237-81	1	O-Ring
4	354-126	1	Fitting-HYD, 45 DEG
4:1	237-79	1	O-Ring
5	63-8410	4	Washer
6	104-4840	1	Tank-HYD
7	2412-36	3	Clamp-Hose
8	2412-34	1	Clamp-Hose
9	353-979	1	Fitting-Straight
9:1	237-42	1	O-Ring

Ref.	Part Number	Qty.	Description
10	3234-13	2	Screw-HHF
11	340-8	1	Adapter
11:1	237-65	1	O-Ring
11:2	237-81	1	O-Ring
13	54-0110	1	Filter-Oil, Transmission
14	57-5420	1	Screw-Shoulder
15	104-7546	1	Tank Strainer ASM
15:1	340-136	1	O-Ring
16	119-6968	1	Dipstick-Oil
17	92-5821	1	Head-Filter
18	93-7160	1	Cap-Oil, HYD
20	99-3501	1	Hose

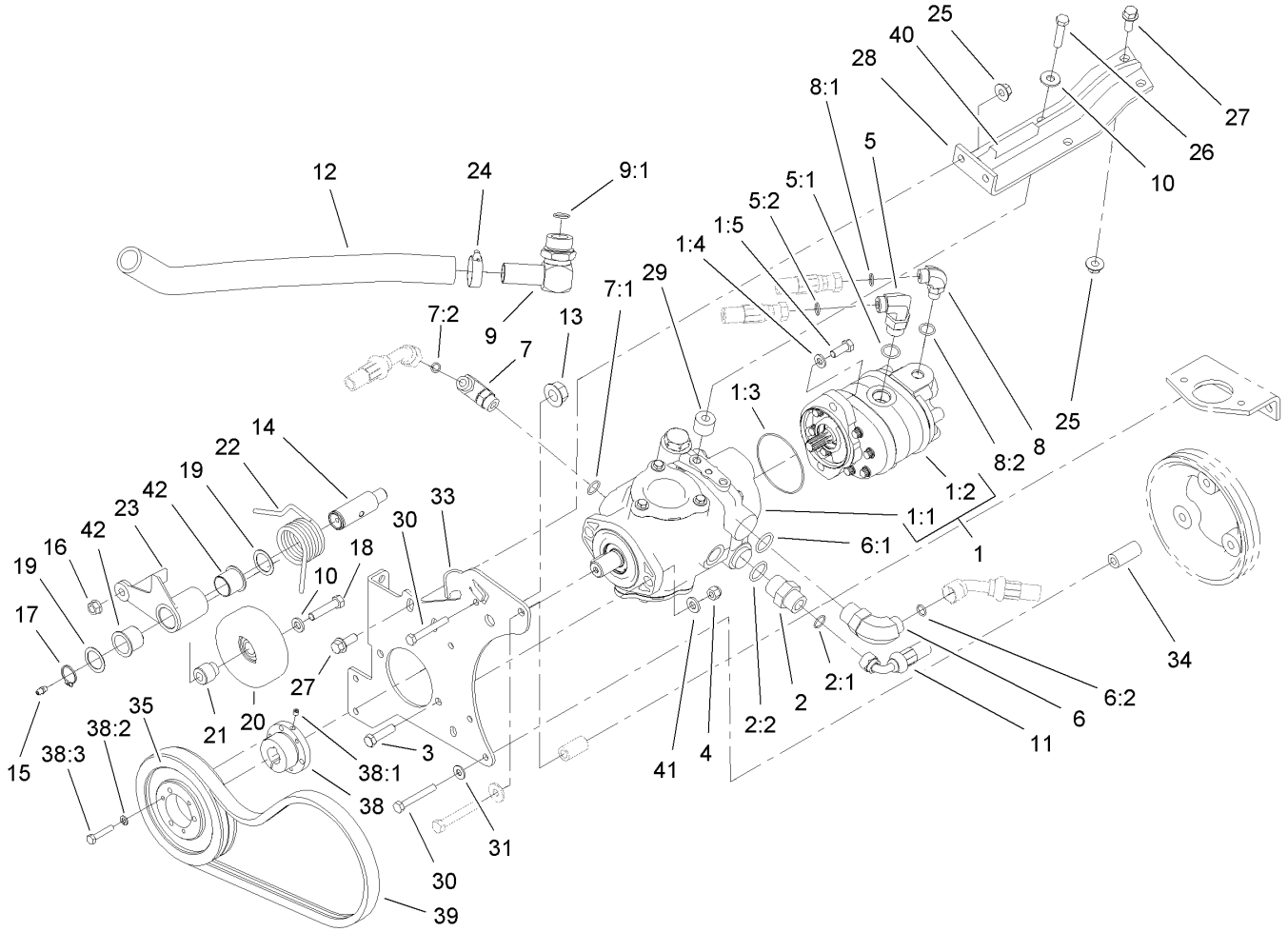

Hydrostat Assembly

Ref.	Part Number	Qty.	Description
1		1	Tandem Pump ASM ●
1:1	104-4890	1	Piston Pump ASM
1:2	95-8601	1	Gear Pump ASM
1:3	60-3520	1	O-Ring
1:4	3256-24	2	Washer-Flat
1:5	3274-1	2	Screw-HSH
2	340-8	1	Adapter
2:1	237-65	1	O-Ring
2:2	237-81	1	O-Ring
3	323-8	2	Screw-HH
4	3296-39	2	Nut-Lock, NI
5	340-105	1	Fitting-HYD, 90 DEG
5:1	237-80	1	O-Ring
5:2	237-30	1	O-Ring
6	340-139	1	Fitting-HYD, 90 DEG
6:1	237-81	1	O-Ring
6:2	237-65	1	O-Ring
7	340-18	1	Fitting-HYD, 90 DEG
7:1	237-79	1	O-Ring
7:2	237-22	1	O-Ring
8	340-77	1	Fitting-HYD, 90 DEG
8:1	237-22	1	O-Ring
8:2	237-42	1	O-Ring
9	56-9530	1	Fitting-HYD, 90 DEG
9:1	237-117	1	O-Ring

Ref.	Part Number	Qty.	Description
10	80-6990	3	Washer-Hardened
11	105-1214	1	Hose-HYD
12	104-4845	1	Hose-Suction
13	32128-54	1	Nut-HF
14	99-3529	1	Shaft-Pivot, Idler
15	302-5	1	Fitting-Grease
16	32128-21	1	Nut-HF
17	32151-36	1	Ring-Retaining
18	323-10	1	Screw-HH
19	74-1810	2	Washer
20	95-8802	1	Pulley-Idler
21	95-8806	1	Spacer
22	95-8917	1	Spring-Torsion
23	99-3623-03	1	Arm-Idler
24	2412-34	1	Clamp-Hose
25	32128-43	4	Nut-Flange
26	323-19	2	Screw-HH
27	3234-11	4	Screw-HHF
28	99-3436-03	1	Support-Pump
29	99-3440	2	Spacer
30	33114-060	4	Screw-HH
31	87-8640	3	Washer-Flat
33	95-8933-03	1	Plate-Mount, Pump
34	95-8941	4	Spacer-Mount, Pump
35	93-6841	1	Pulley

● Not serviced separately

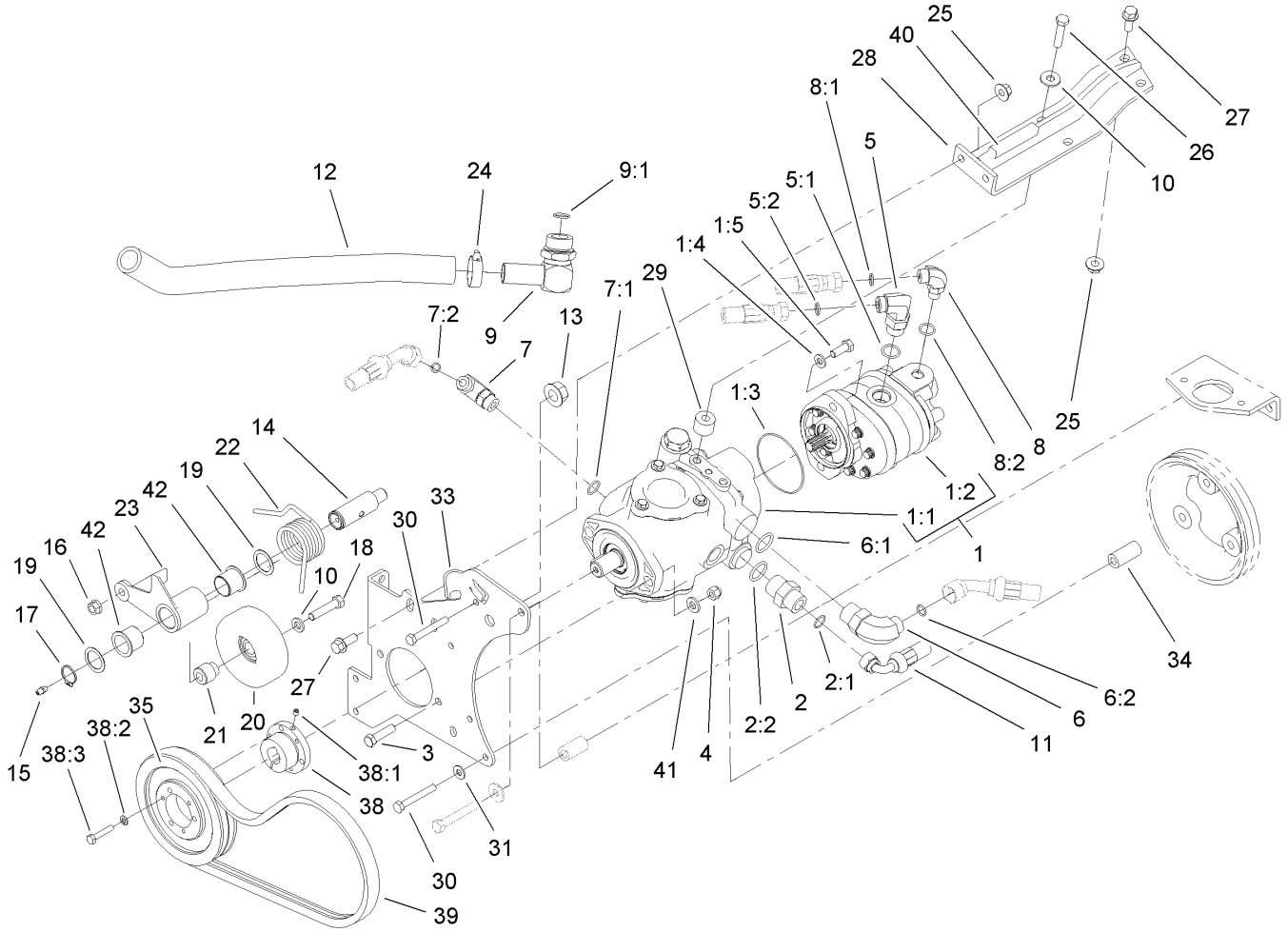

Hydrostat Assembly (continued)

Ref.	Part Number	Qty.	Description
38	93-6842	1	Bushing-Lock, Taper
38:1	3245-36	1	Screw-Set, HSH
38:2	321-13	3	Screw-HH
38:3	3253-2	3	Washer-Lock

Ref.	Part Number	Qty.	Description
39	95-8730	1	V-Belt
40	70-2041	1	Trim
41	100-4852	2	Washer-Hardened
42	99-3631	2	Bushing-Flange

● Not serviced separately

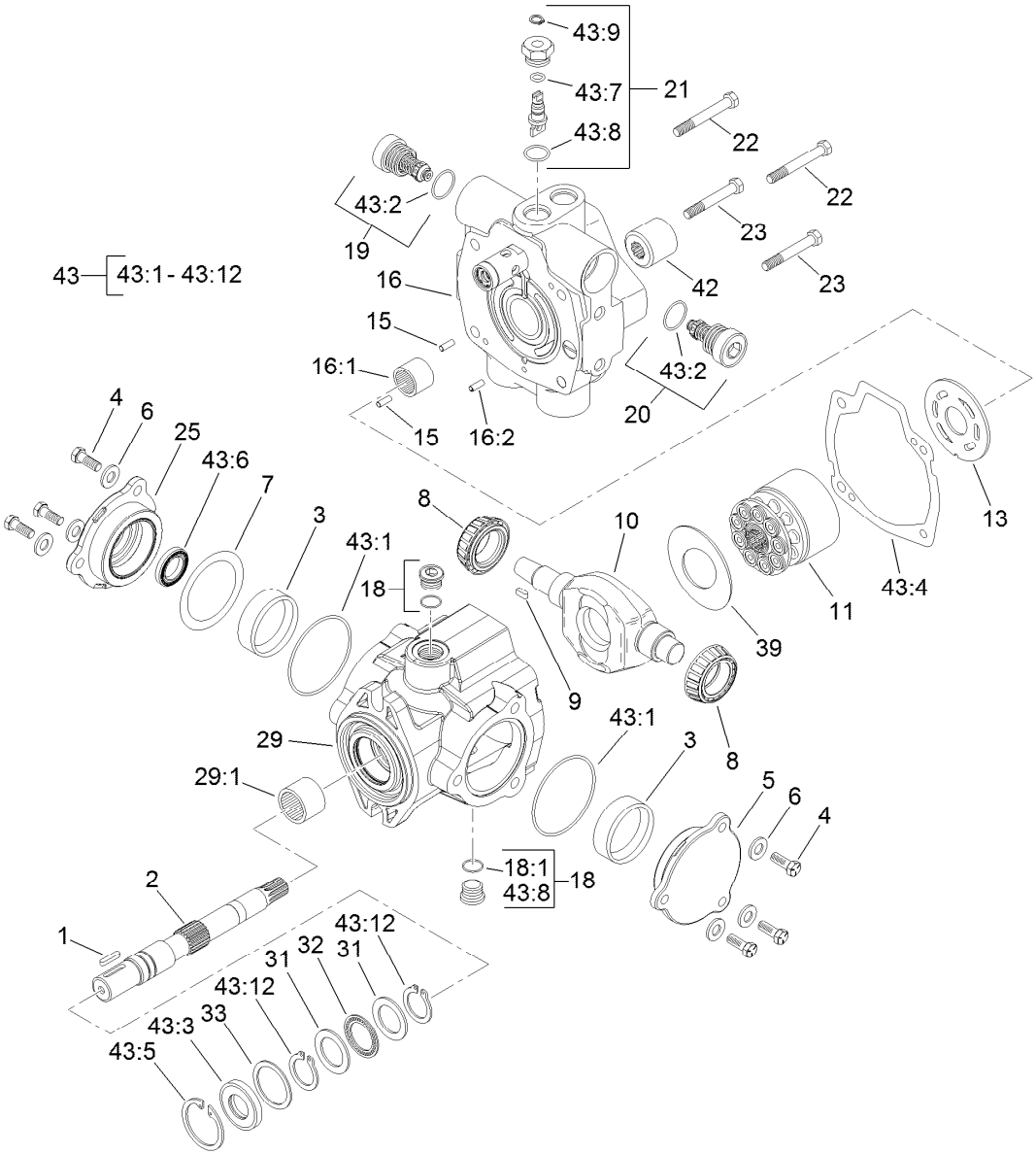

Hydraulic Pump Assembly No. 104-4890

Ref.	Part Number	Qty.	Description
1	94-3645	1	Key
2	94-6359	1	Shaft-Drive
3	104-4046	2	Bearing-Cup
4	98-4640	6	Screw-Cap
5	98-4644	1	Plate-Cover
6	105-9762	6	Washer
7	100-3182	2	Shim Kit
8	98-4639	2	Bearing-Cone
9	94-3646	1	Key
10	104-4888	1	Swashplate
11	76-6070	1	Rotating Kit
13	104-0429	1	Plate-Valve
15	76-6150	2	Pin-Dowel
16	105-3813	1	Endcover Sub ASM
16:1	94-6368	1	Bearing
16:2		1	Pin-Roll ■
18	74-9280	2	Plug ASM
18:1		1	Ring-Retaining ■

Ref.	Part Number	Qty.	Description
19	104-4889	1	Relief Valve ASM
20	105-3812	1	Valve-Check
21	105-3811	1	Valve-Bypass
22	76-6170	2	Capscrew
23	76-6160	2	Capscrew
25	98-4645	1	Plate-Cover
29	100-3176	1	Housing ASM
29:1	94-6363	1	Bearing
31	252-71	2	Washer-Thrust
32	252-66	1	Bearing-Thrust
33	33-3720	1	Washer
39	98-4635	1	Insert-Plate, Cam
42	74-9040	1	Coupler
43	120-5754	1	Seal Kit
43:1		2	Ring-Retaining ■
43:2		2	Ring-Retaining ■
43:3		1	Seal-Shaft ■
43:4		1	Gasket ■

● Not illustrated

■ Not serviced separately

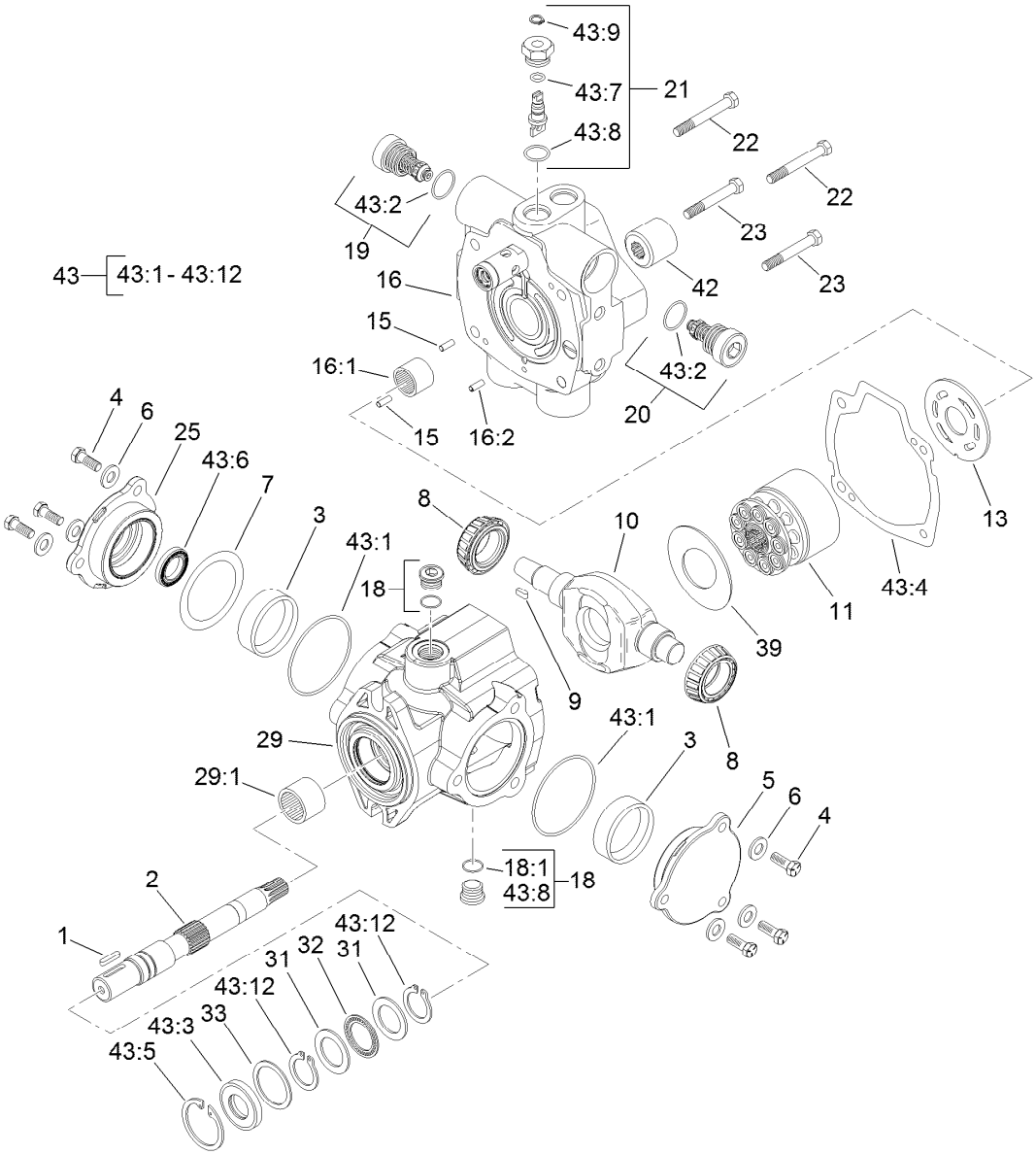

Hydraulic Pump Assembly No. 104-4890 (continued)

Ref.	Part Number	Qty.	Description
43:5		1	Ring-Retaining ■
43:6		1	Seal-Shaft ■
43:7		1	Ring-Retaining ■
43:8		5	Ring-Retaining ■
43:9		1	Ring-Retaining ■
43:10		1	O-Ring (Not Used For This Configuration) ■ ●
43:11		1	O Ring-Molded (Not Used For This Configuration) ■ ●
43:12		2	Ring-Retaining ■
43:13		1	O-Ring (Not Used For This Configuration) ■ ●

● Not illustrated

■ Not serviced separately

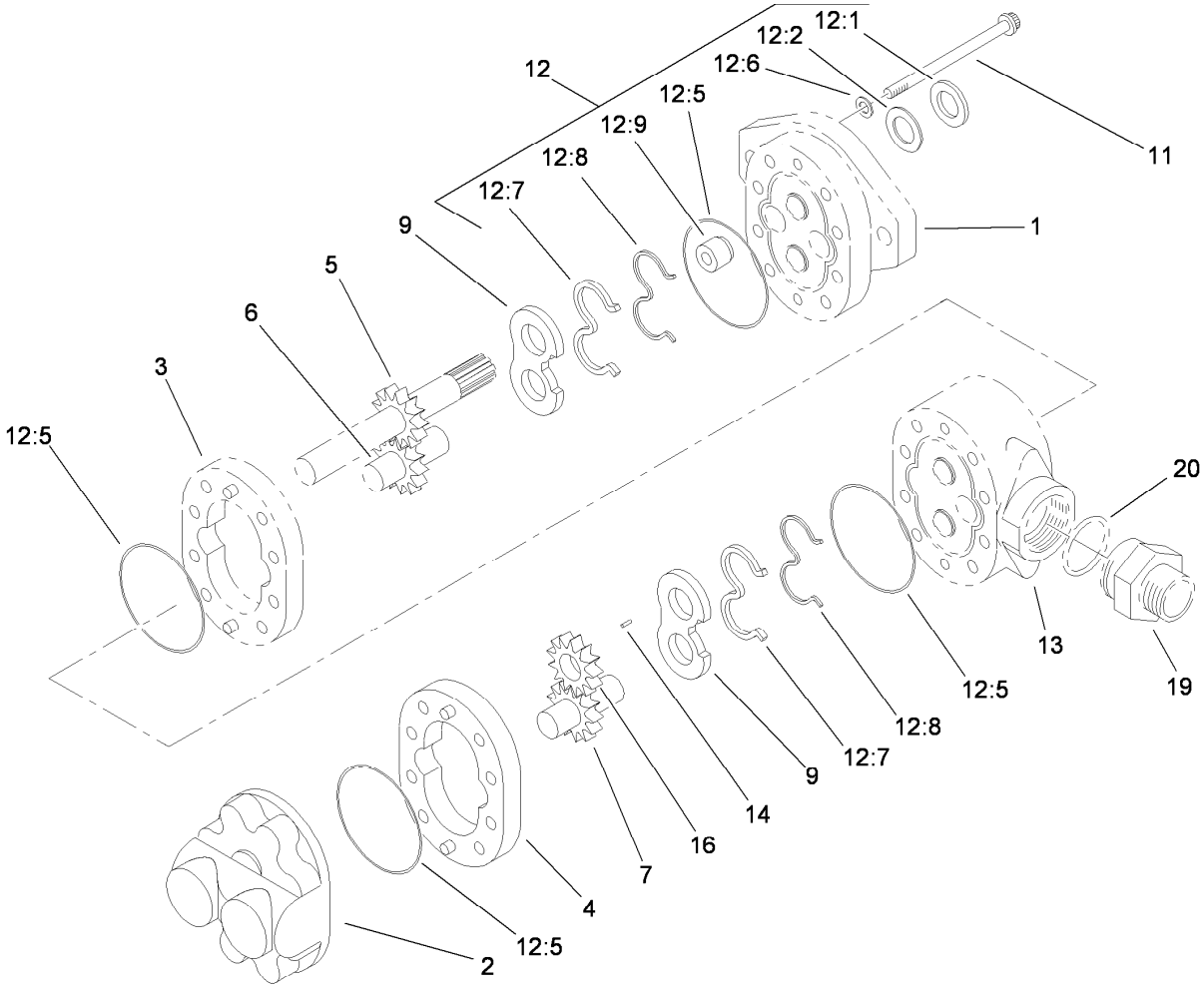

Gear Pump Assembly No. 95-8601

Ref.	Part Number	Qty.	Description
1		1	Plate-Front ■
2		1	Plate-Back ■
3		1	Body ■
4	95-4364	1	Body
5		1	Gear-Drive ■
6		1	Gear-Idler ■
7	95-4366	1	Gear-Idler
9	95-4368	2	Plate-Wear
11	94-8158	8	Screw-Cap
12	94-8161	1	Seal Repair Kit ●
12		4	O-Ring ■
12:1	49-2640	1	Seal-Shaft
12:2	60-5890	1	Washer
12:5		4	O-Ring ■
12:6	94-8160	4	Washer
12:7	95-4369	2	Seal-Pressure
12:8	95-4367	2	Gasket-Backup
12:9	94-3011	1	Plug
13		1	Plate-Adapter ■
14		1	Key ■
16	95-4373	1	Gear-Fit, Slip
19	49-2640	1	Seal-Shaft
20	60-5890	1	Washer

● Not illustrated

■ Not serviced separately

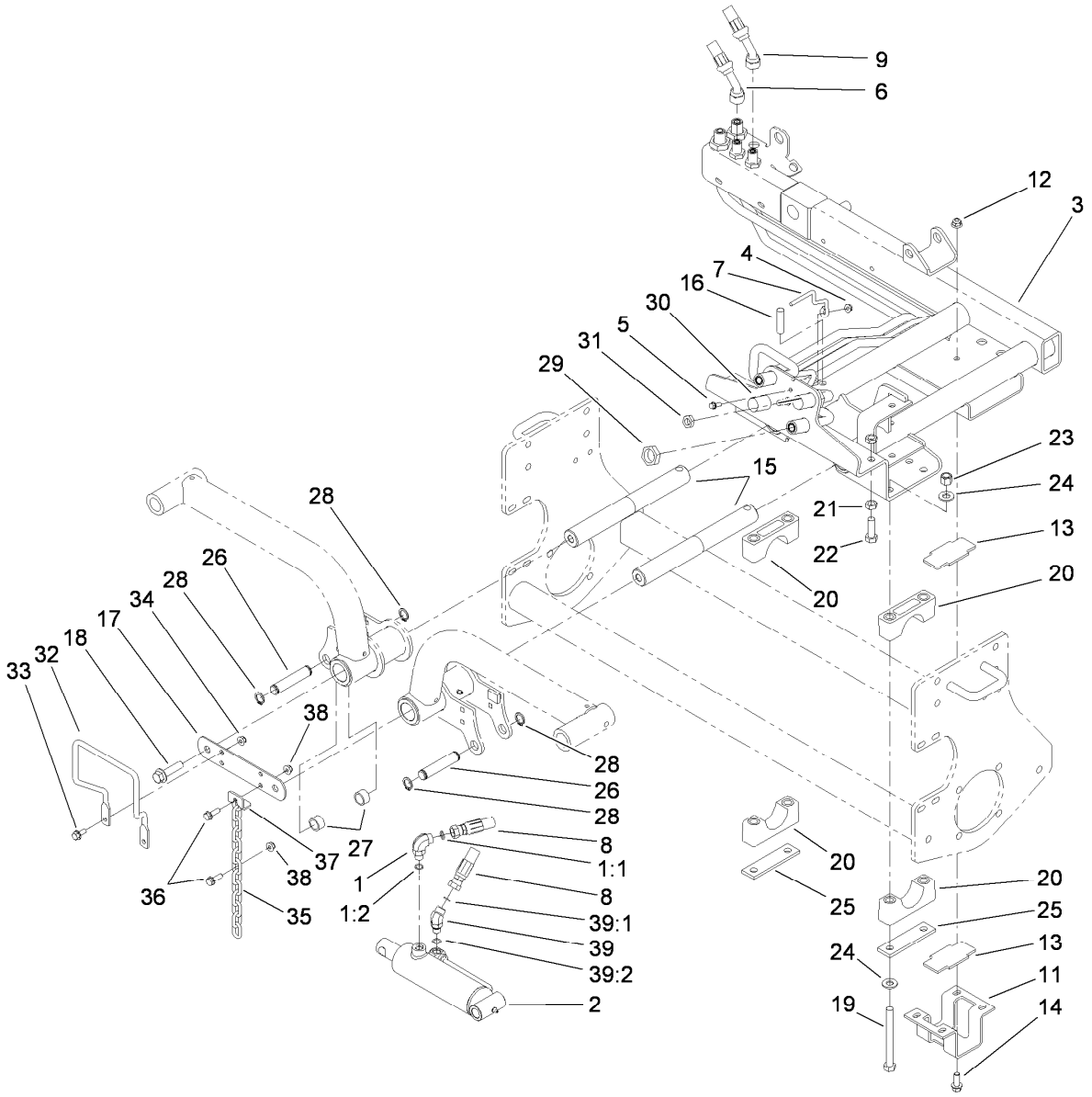

Carrier Assembly

Ref.	Part Number	Qty.	Description
1	340-77	1	Fitting-HYD, 90 DEG
1:1	237-22	1	O-Ring
1:2	237-42	1	O-Ring
2	117-5109	1	Cylinder-HYD
3	100-4930-03	1	Carrier ASM
4	32128-33	1	Nut-HF
5	3234-4	1	Screw-HHF
6	95-8822	1	Hose-HYD
7	99-3433	1	Wire-Center
8	117-5147	2	Hose ASM-HYD
9	95-8821	1	Hose-HYD
11	95-8519-03	1	Bracket-Slide
12	32128-43	4	Nut-Flange
13	95-8538	2	Slide-Plastic
14	3234-11	4	Screw-HHF
15	95-8531	2	Shaft-Pivot, Liftarm
16	32121-122	2	Pin-Roll
17	95-8532-03	1	Link-Shaft, Pivot
18	3234-27	2	Screw-HHF
19	325-19	8	Screw-HH
20	104-4865	8	Cap-Bearing

Ref.	Part Number	Qty.	Description
21	3218-5	4	Nut-Jam
22	325-7	2	Screw-HH
23	3296-23	8	Nut-Lock, NI
24	87-7270	16	Washer-Thrust
25	99-3373	4	Bar-Support, Slide
26	95-8575	2	Pin
27	75-9590	2	Spacer-Cylinder
28	32120-93	4	Ring-Retaining
29	340-74	4	Nut-Lock, Bulkhead
30	99-3640	1	Tube ASM
31	340-78	1	Nut-Lock
32	99-3492	1	Rod-Formed, Hose Guard
33	3234-5	2	Screw-HHF
34	104-8300	2	Nut-Flange, NI
35	98-7981	2	Chain-Link, Straight
36	3234-17	4	Screw-HHF
37	99-3550	2	Clip-Link
38	104-8300	4	Nut-Flange, NI
39	340-87	1	Fitting-HYD, 45 DEG
39:1	237-22	1	O-Ring
39:2	237-42	1	O-Ring

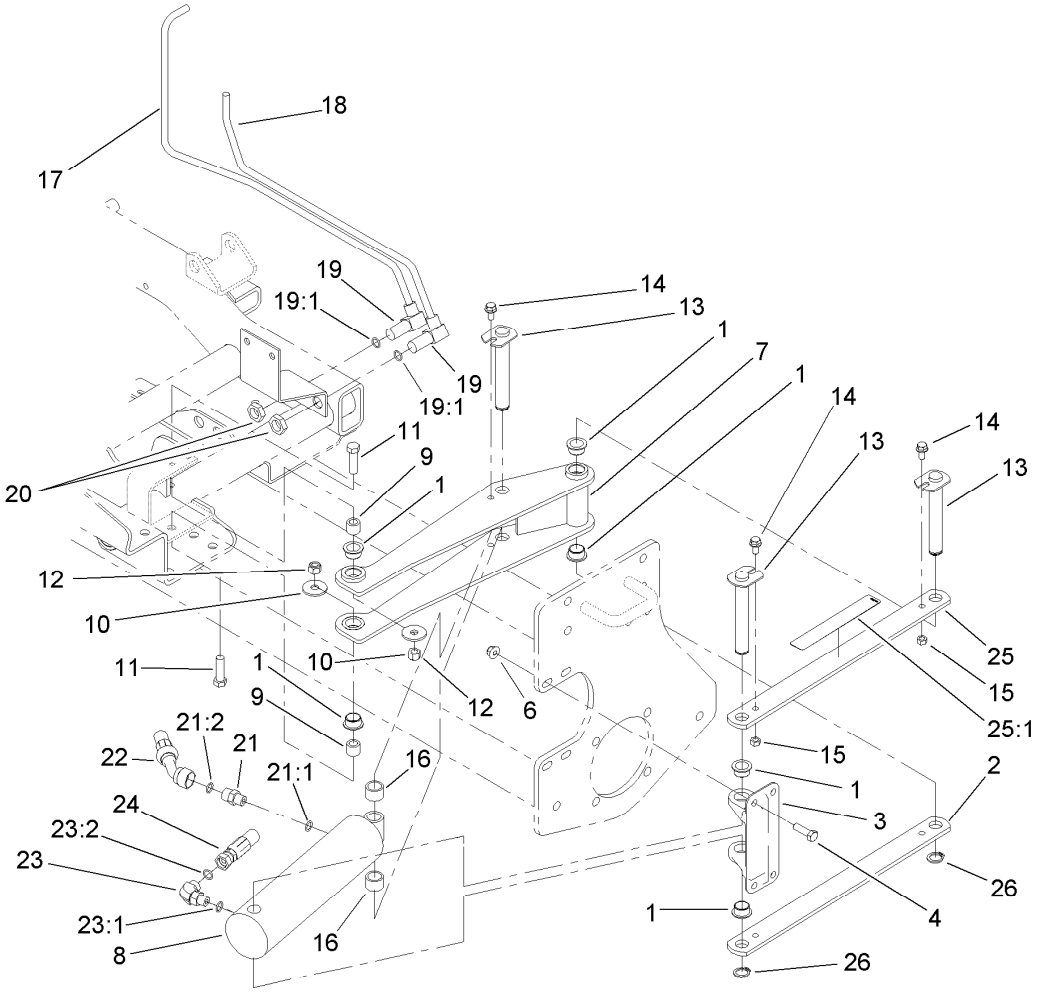

Scissor Assembly

Ref.	Part Number	Qty.	Description
1	95-8526	6	Bushing-Plastic
2	95-8527-03	1	Link-Scissor
3	95-8883	1	Mount-Scissor
4	323-7	4	Screw-HH
6	104-8301	4	Nut-Flange, NI
7	95-8521-03	1	Frame-Scissor
8	95-8512	1	Cylinder-HYD
9	95-8603	2	Spacer
10	87-5330	2	Washer
11	324-6	2	Screw-HH
12	3296-48	2	Nut-Lock, NI
13	95-8529	3	Pin
14	3234-14	3	Screw-HHF
15	32152-1	3	Nut-Lock, Cone
16	46-6350	2	Spacer
17	95-8790	1	Tube-HYD

Ref.	Part Number	Qty.	Description
18	95-8791	1	Tube-HYD
19	340-154	2	Union-Bulkhead
19:1	237-22	2	O-Ring
20	340-70	2	Nut-Lock
21	85-9720	1	Fitting-Orificed (.060)
21:1	237-78	1	O-Ring
21:2	237-21	1	O-Ring
22	95-8838	1	Hose-HYD
23	340-132	1	Fitting-HYD, 90 DEG
23:1	237-78	1	O-Ring
23:2	237-21	1	O-Ring
24	95-8839	1	Hose-HYD
25	99-3505	1	Scissors Link ASM
25:1	94-3353	1	Decal-Point, Pinch
26	32120-93	2	Ring-Retaining

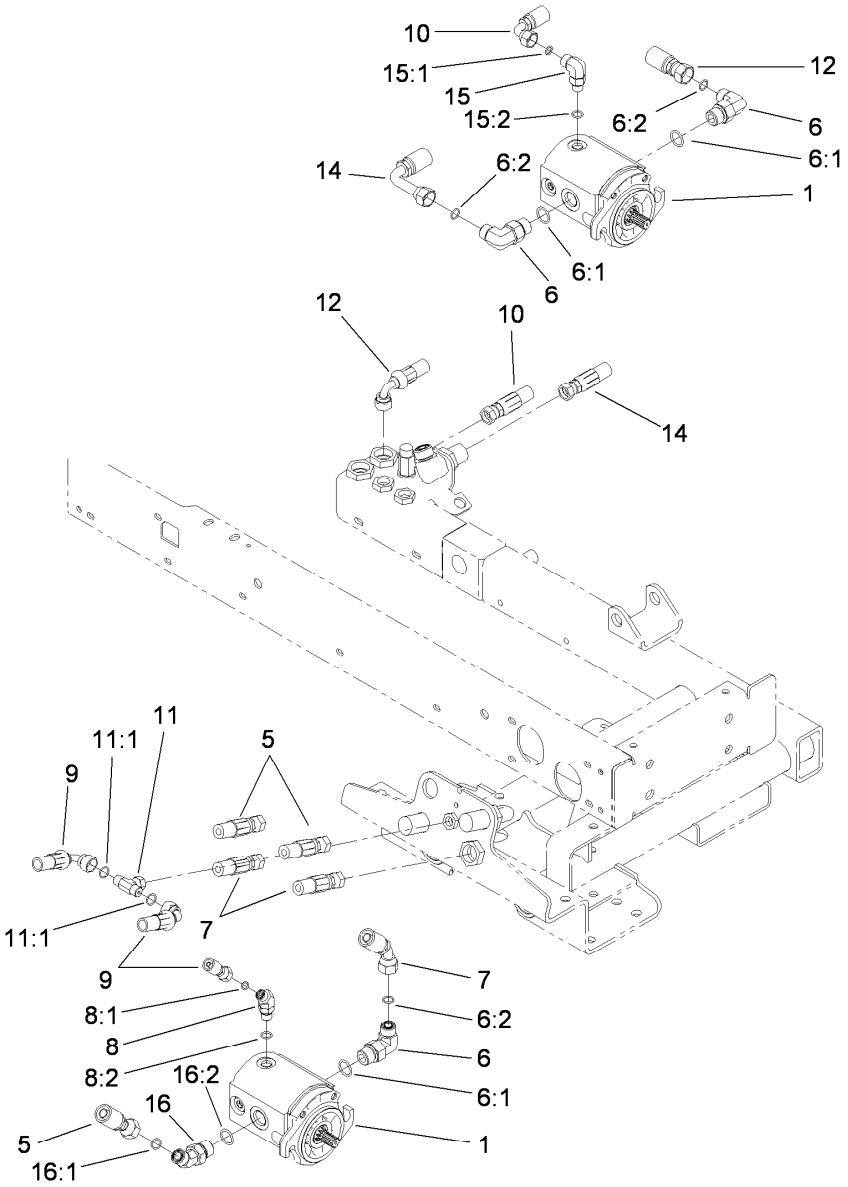

Reel Motor Assembly

Ref.	Part Number	Qty.	Description
1	115-8250	3	Gear Motor ASM
5	117-5142	2	HYD Hose ASM
6	340-105	4	Fitting-HYD, 90 DEG
6:1	237-80	1	O-Ring
6:2	237-30	1	O-Ring
7	117-5143	2	HYD Hose ASM
8	340-137	2	Fitting
8:1	237-21	1	O-Ring
8:2	237-42	1	O-Ring
9	117-5144	2	HYD Hose ASM
10	114-5500	1	Hose-Hydraulic

Ref.	Part Number	Qty.	Description
11	99-3477	1	Fitting-Tee
11:1	237-42	2	O-Ring
12	117-5146	1	HYD Hose ASM
14	117-5145	1	HYD Hose ASM
15	340-77	1	Fitting-HYD, 90 DEG
15:1	237-22	1	O-Ring
15:2	237-42	1	O-Ring
16	340-89	2	Fitting-HYD, 45 DEG
16:1	237-30	1	O-Ring
16:2	237-80	1	O-Ring

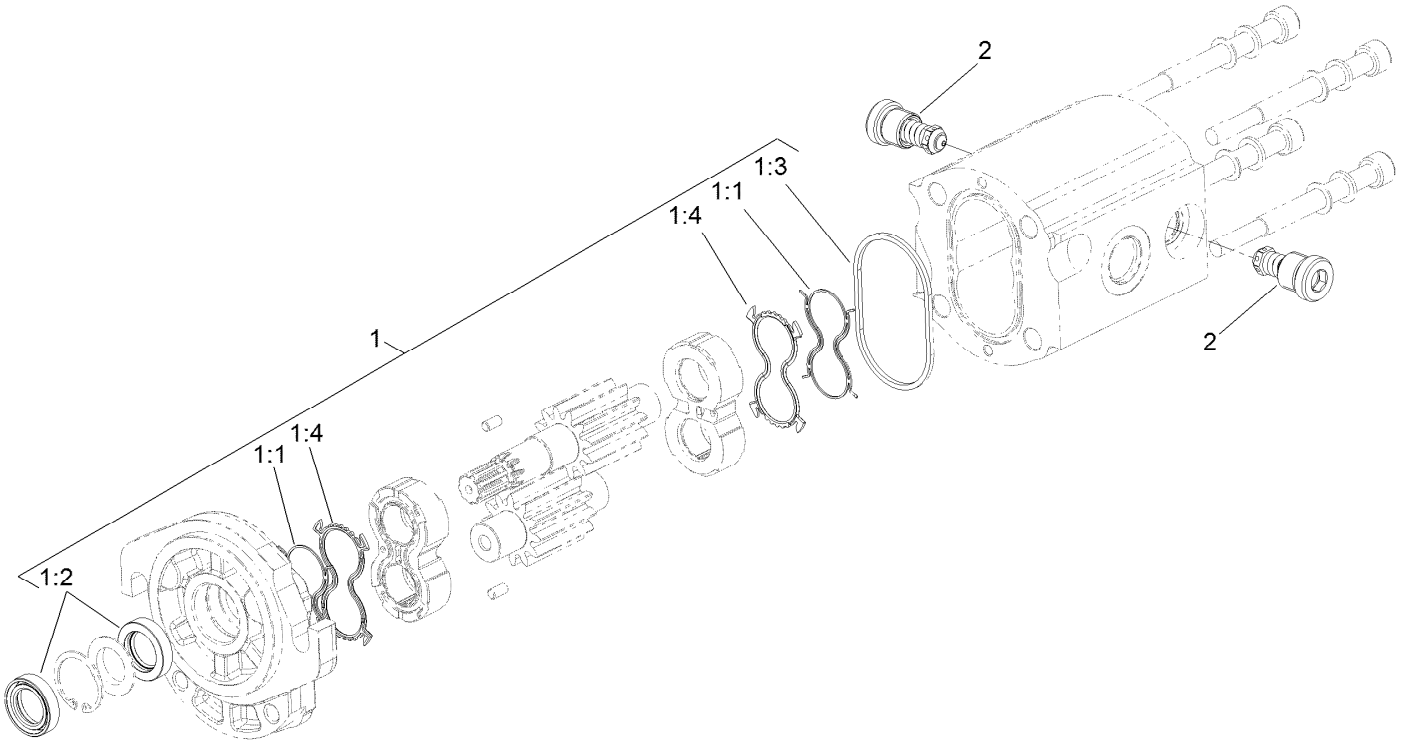

Gear Motor Assembly No. 115-8250

Ref.	*Part Number*	*Qty.*	*Description*
1	125-1682	1	Motor Seal Kit
1:1		2	Seal-Anti Extrusion ●
1:2		2	Seal-Shaft ●
1:3		1	Seal-Quad ●
1:4		2	Seal ●
2	117-5107	2	Valve-Check

● Not serviced separately

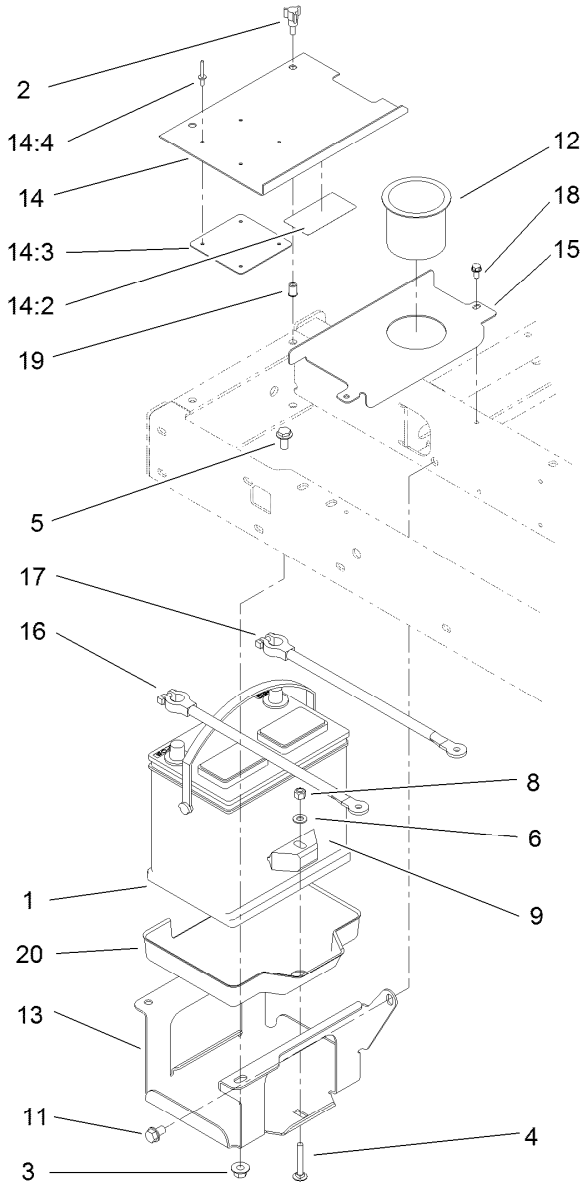

Battery Assembly

Ref.	Part Number	Qty.	Description
1	104-9979	1	Battery-Dry
2	233-70	2	Knob-Star, Three
3	32128-43	3	Nut-Flange
4	3230-6	1	Screw-CARR
5	3234-1	3	Screw-HHF
6	3256-23	1	Washer-Flat
8	3296-29	1	Nut-Lock, NI
9	66-2490	1	Retainer-Battery
11	32144-15	1	Screw-HHFTF
12	94-1410	1	Holder-Can, Beverage
13	95-8796-03	1	Support-Battery

Ref.	Part Number	Qty.	Description
14		1	Battery Cover ASM ●
14:2	93-7276	1	Decal-Danger
14:3	87-7620	1	Shield-Terminal, Battery
14:4	3269-27	4	Rivet-Snap
15	95-8817-01	1	Cover-Battery, Inner
16	95-8853	1	Cable-Battery, Positive
17	95-8854	1	Cable-Battery, Negative
18	32144-4	2	Screw-HWH
19	32148-6	2	Insert-Nut
20	99-3513	1	Tray-Battery

● Not serviced separately

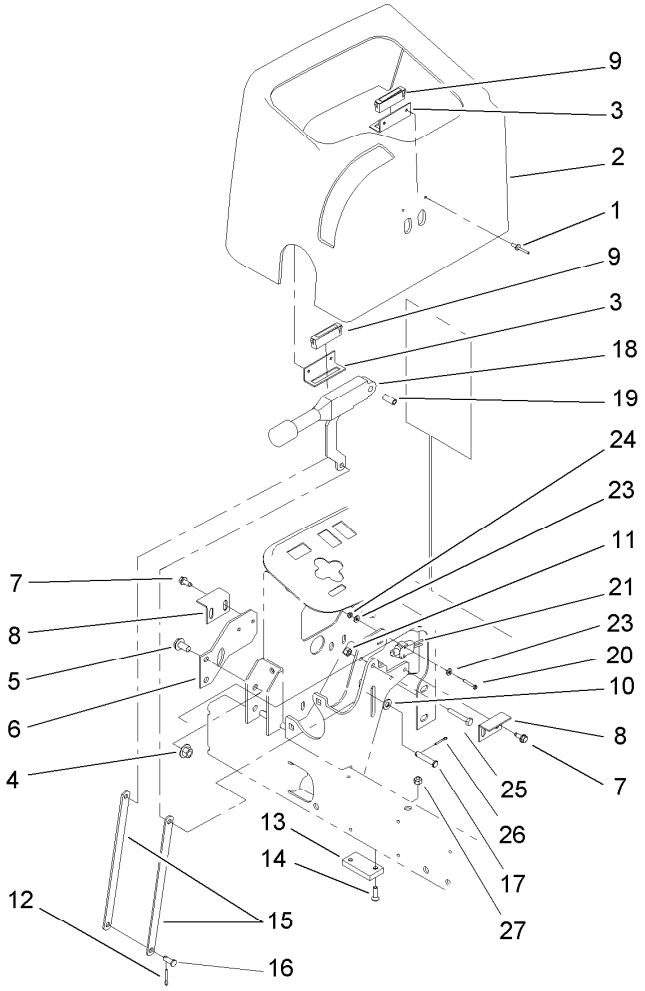

Parking Brake Assembly

Ref.	Part Number	Qty.	Description
1	3269-5	4	Rivet-Pop
2	95-8707	1	Cover-Dash
3	95-8763	2	Bracket-Hold Down, Cover
4	32128-43	2	Nut-Flange
5	3234-1	2	Screw-HHF
6	95-8764-03	1	Support-Magnet
7	32144-10	4	Screw-HWH
8	95-8765	2	Bracket-Strike, Magnet
9	58-4250	2	Catch-Magnetic
10	3256-23	3	Washer-Flat
11	3296-42	1	Nut-Lock, NI
12	3272-10	1	Pin-Cotter
13	95-8684	1	Pad-Bumper

Ref.	Part Number	Qty.	Description
14	3289-4	2	Screw-FH
15	104-4628-03	2	Link-Brake, Parking
16	283-62	1	Pin-Clevis
17	94-3829	1	Pin-Clevis
18	104-4817	1	Lever-Brake
19	87-4710	1	Spacer-Brake, Parking
20	32105-9	2	Screw
21	95-8900	1	Switch
23	3256-21	4	Washer-Flat
24	3296-9	2	Nut-Lock
25	321-10	1	Screw-HH
26	3272-6	1	Pin-Cotter
27	32128-32	2	Nut-HHF

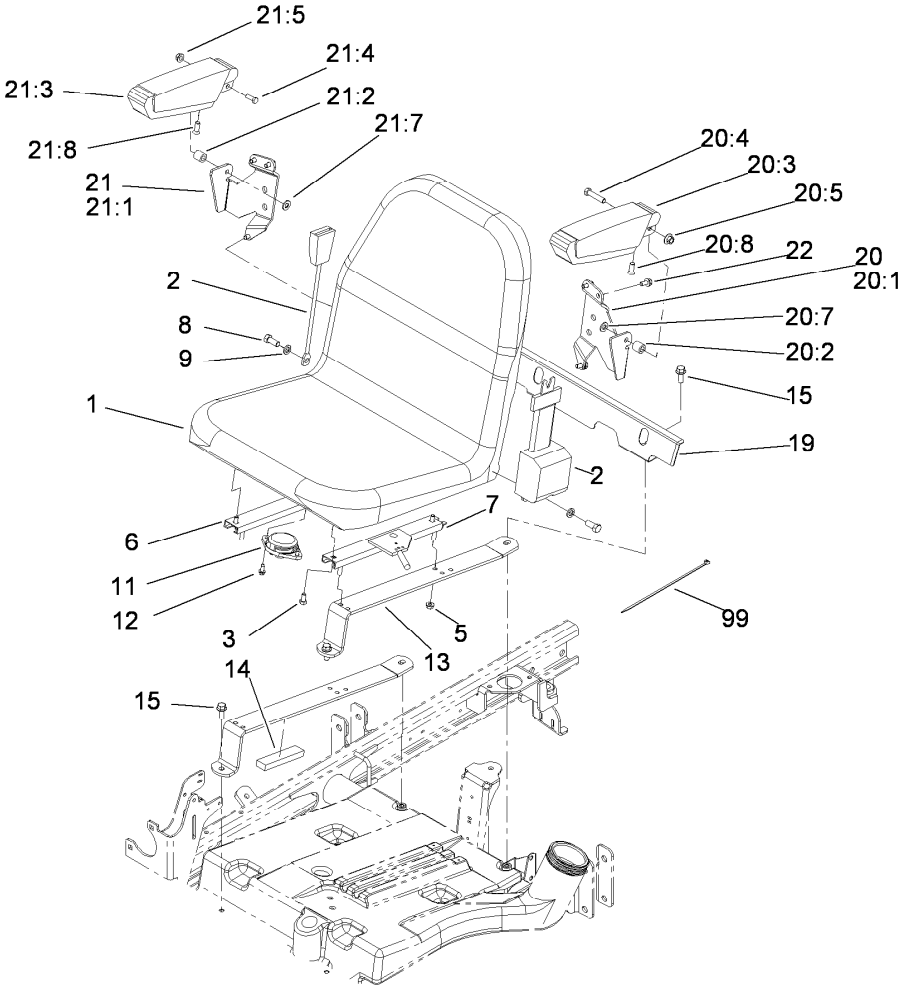

Seat Assembly

Ref.	Part Number	Qty.	Description
1	104-4620	1	Seat
2	100-4928	1	Belt-Seat
3	3234-14	4	Screw-HHF
5	104-8300	4	Nut-Flange, NI
6	92-8990	1	Adjuster-Slave
7	92-8991	1	Adjuster (W/Latch)
8	3212-4	2	Screw-HH
9	3253-6	2	Washer-Lock
11	92-6282	1	Switch-Seat
12	32144-10	2	Screw-HWH
13	104-4847-03	2	Strap-Support, Seat
14	95-8896	2	Foam
15	3234-11	4	Screw-HHF
19	104-4833-03	1	Shield-Heat
20	92-7307	1	LH Armrest ASM
20:1	69-0760	1	Bracket-Arm, LH

Ref.	Part Number	Qty.	Description
20:2	92-7301	1	Spacer
20:3	69-1180	1	Armrest
20:4	323-9	1	Screw-HH
20:5	32128-19	1	Nut-HF
20:7	3256-24	1	Washer-Flat
20:8	92-7318	1	Screw
21	92-7306	1	RH Armrest ASM
21:1	69-0770	1	Bracket-Arm, RH
21:2	92-7301	1	Spacer
21:3	69-1180	1	Armrest
21:4	323-9	1	Screw-HH
21:5	32128-19	1	Nut-HF
21:7	3256-24	1	Washer-Flat
21:8	92-7318	1	Screw
22	3234-14	6	Screw-HHF
99	3290-378	1	Tie-Cable

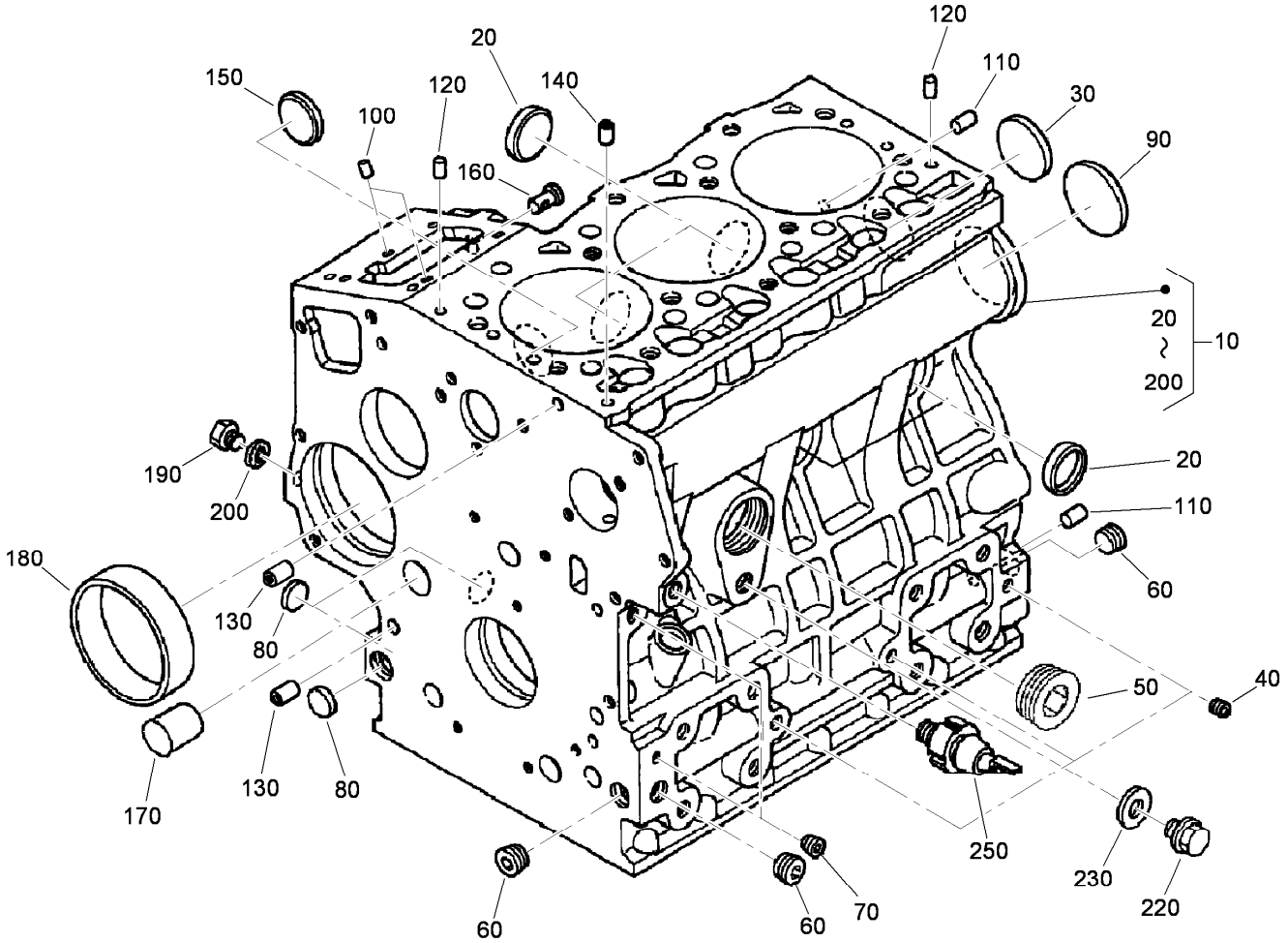

Crankcase Assembly

Ref.	Part Number	Qty.	Description
10	115-3443	1	Crankcase ASM
20	98-9398	4	Cap-Sealing
30	98-7539	1	Cap-Sealing
40	98-7540	3	Plug
50	105-3779	1	Plug
60	98-9597	3	Plug
70	98-7487	2	Plug
80	98-9379	3	Plug-Expansion
90	98-9668	1	Plug-Expansion
100	98-9375	2	Pin-Straight
110	98-9377	2	Pin-Straight
120	98-9376	2	Pin-Straight
130	98-9387	2	Pin-Pipe
140	98-9539	1	Pin-Pipe
150	98-9599	1	Plug
160	98-9630	1	Pin-Spring, Start
170	98-9675	1	Plug
180	98-9656	1	Bushing-Governor, Gear
190	98-7507	1	Plug
200	98-7428	1	Gasket
220	99-3447	1	Plug
230	106-7056	1	Gasket
250	98-9416	1	Switch-Oil

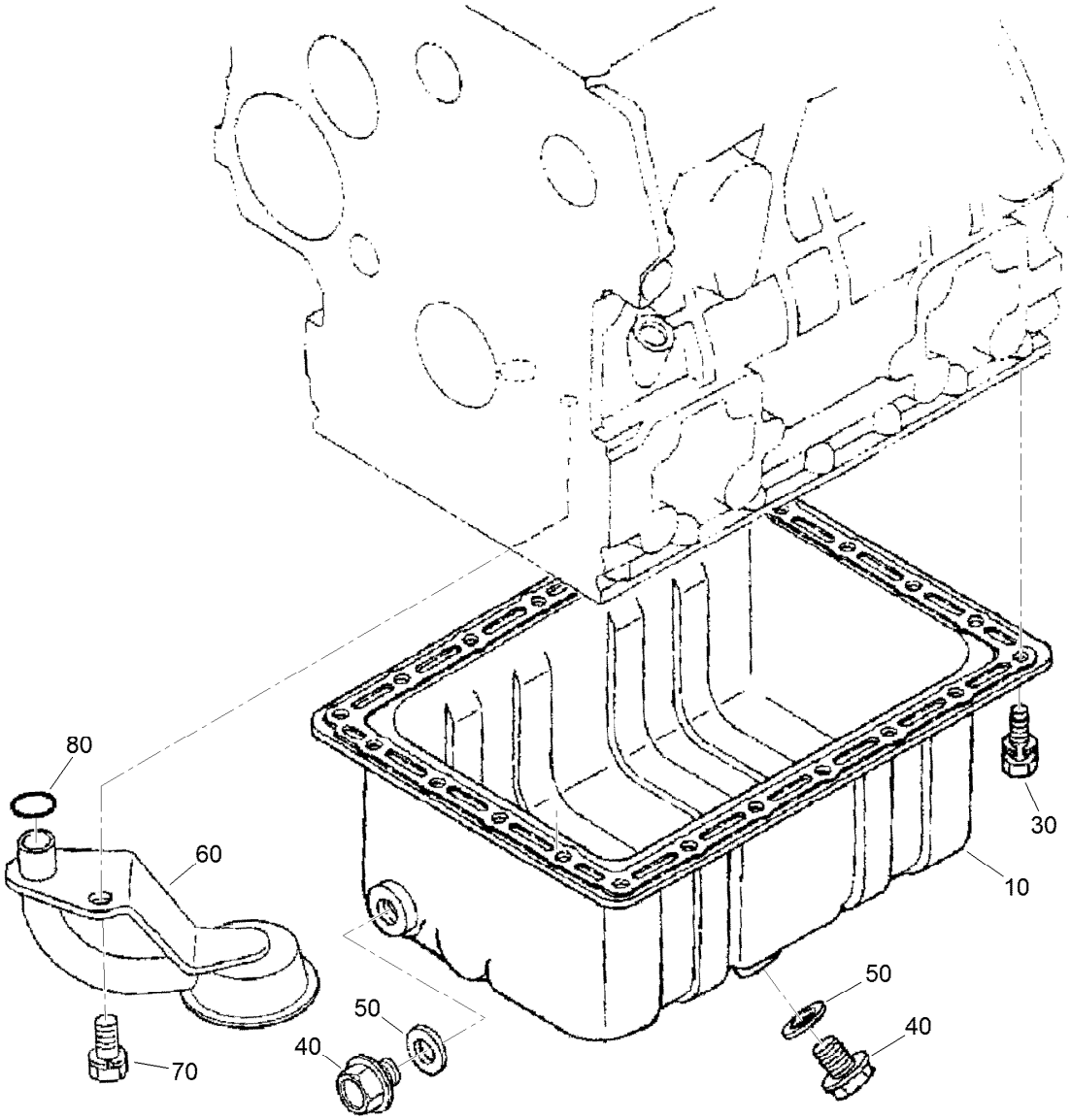

Oil Pan Assembly

Ref.	Part Number	Qty.	Description
10	98-9685	1	Pan-Oil
30	98-9351	22	Bolt
40	114-8151	2	Plug-Drain
50	98-7524	2	Gasket
60	112-7044	1	*obs* Head-Filter
70	98-7526	1	Bolt
80	105-3776	1	O-Ring

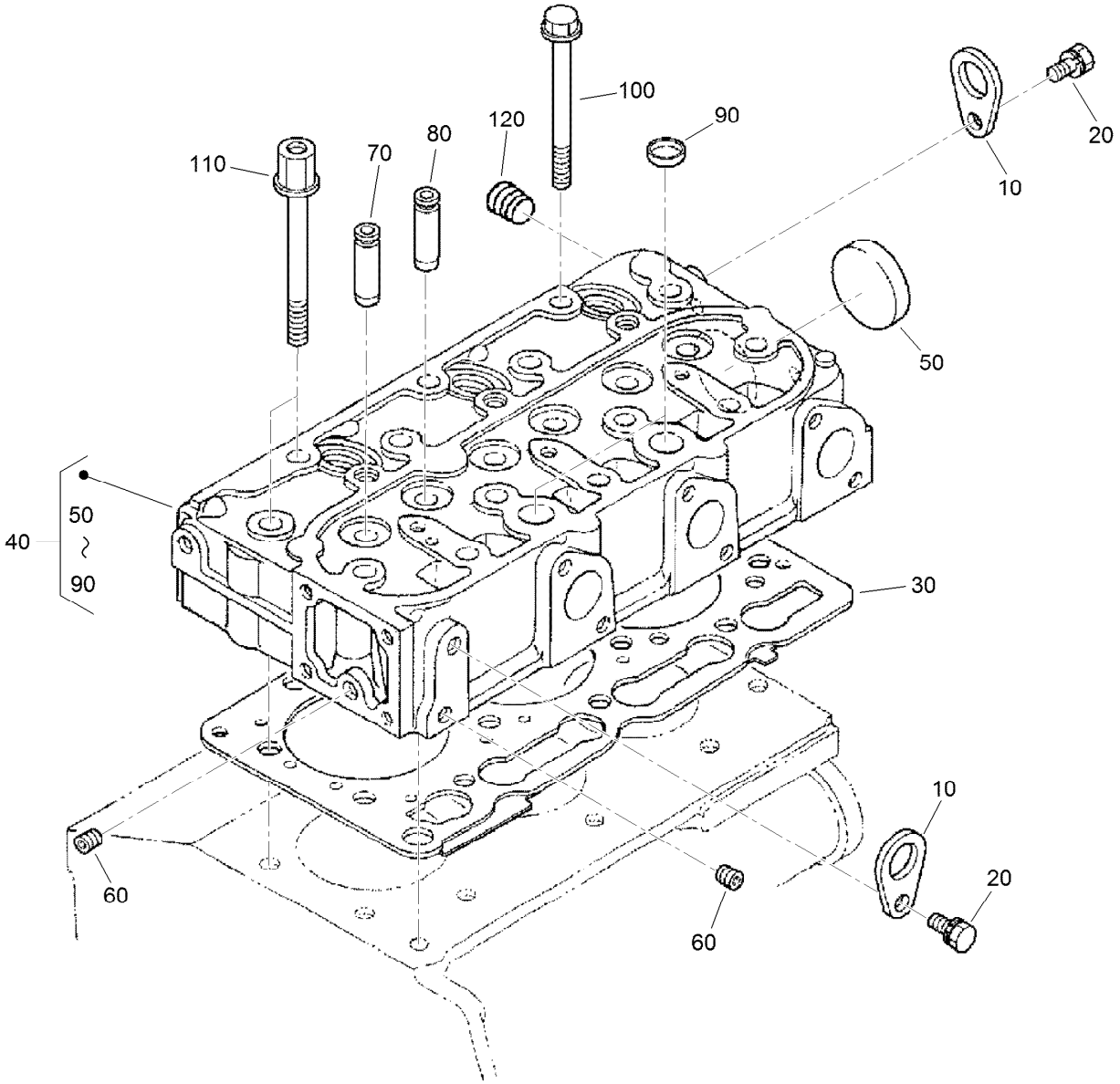

Cylinder Head Assembly

Ref.	*Part Number*	*Qty.*	*Description*
10	98-7531	2	Hook-Engine
20	100-9195	2	Bolt
30	108-6573	1	Gasket-Head, Cylinder
40	115-3445	1	Cylinder Head ASM
50	105-3705	1	Cap-Sealing
60	98-7540	2	Plug
70	107-9066	3	Guide-Valve, Inlet
80	107-9067	3	Guide-Valve, Exhaust
90	98-9389	2	Cap-Sealing
100	98-9479	12	Bolt-Head, Cylinder
110	98-9647	2	Bolt-Head, Cylinder
120	98-9444	1	Plug

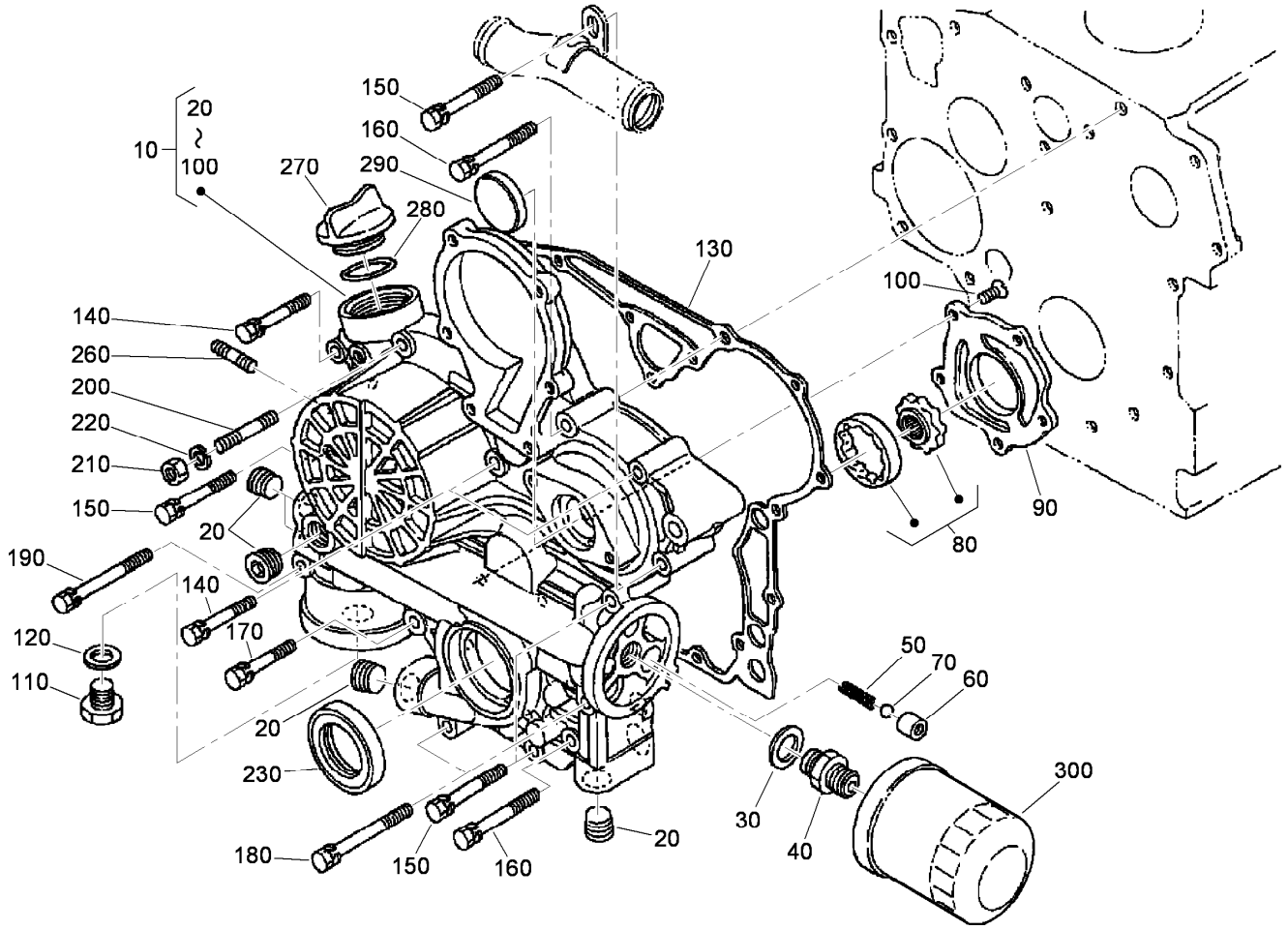

Gear Case and Oil Filter Cartridge Assembly

Ref.	Part Number	Qty.	Description
10	115-3442	1	Comp Gear Case
20	98-9598	5	Plug
30	98-7562	1	Washer-Plain
40	98-9388	1	Joint-Pipe
50	98-9544	1	Spring
60	98-9543	1	Seat-Valve
70	98-9380	1	Ball
80	98-9540	1	Oil Pump Rotor ASM
90	105-3708	1	Cover-Pump, Oil
100	98-9592	5	Screw
110	99-3450	1	Plug
120	99-3451	1	Plug-Packing
130	98-9633	1	Gasket-Case, Gear
140	107-9073	3	Bolt

Ref.	Part Number	Qty.	Description
150	105-3797	4	Bolt
160	98-9356	2	Bolt
170	98-9437	1	Bolt
180	98-9586	2	Bolt
190	99-3511	1	Bolt
200	105-3709	1	Stud
210	98-7572	1	Nut
220	98-7699	1	Washer-Spring
230	98-9482	1	Seal-Oil
260	105-3710	2	Stud
270	107-9075	1	Plug-Filler, Oil
280	99-3446	1	O-Ring
290	98-9641	1	Cover-Case, Gear
300	108-3841	1	Filter-Oil

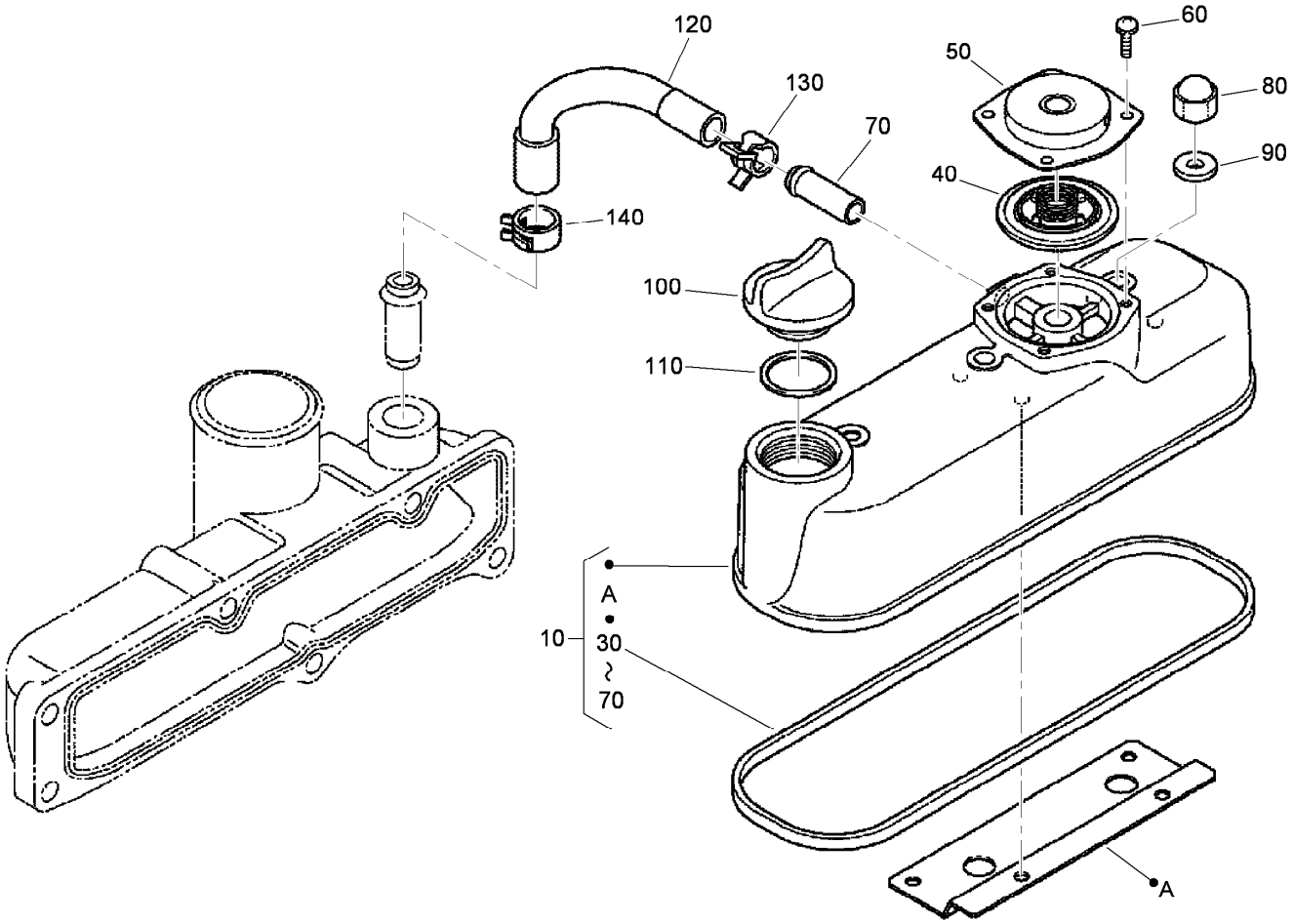

Cylinder Head Cover Assembly

Ref.	*Part Number*	*Qty.*	*Description*
10	115-3446	1	Cylinder Head Cover ASM
30	98-9615	1	Gasket-Cover, Head
40	110-3715	1	Valve-Breather
50	110-3714	1	Cover-Breather
60	98-9364	4	Screw (With Washer)
70	98-7766	1	Pipe-Return, Water
80	98-9455	3	Nut-Cap
90	98-9454	3	Gasket
100	107-9075	1	Plug-Filler, Oil
110	99-3446	1	O-Ring
120	108-2858	1	Tube-Breather
130	108-2859	1	Clamp-Hose
140	108-2860	1	Clamp-Hose

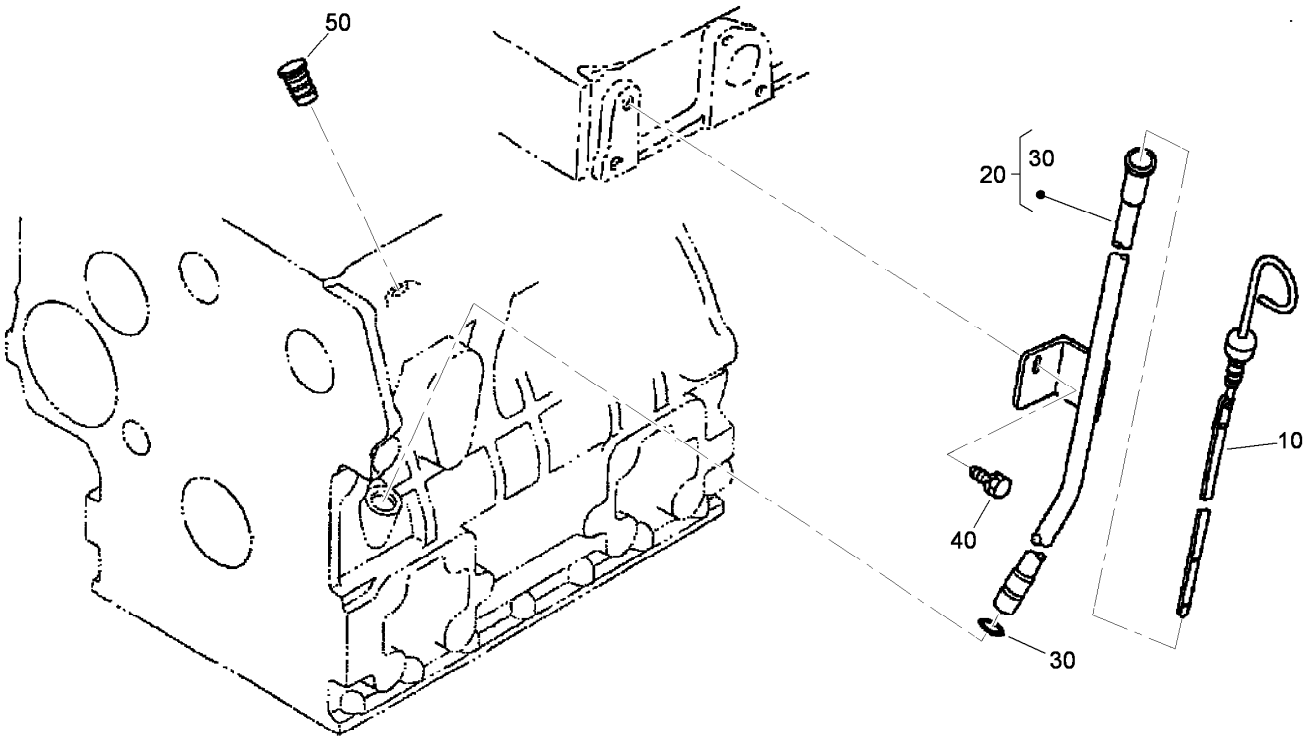

Dipstick and Guide Assembly

Ref.	*Part Number*	*Qty.*	*Description*
10	98-9670	1	Gauge-Oil
20	98-9672	1	Oil Gauge Guide ASM
30	98-9722	1	O-Ring
40	98-7453	1	Bolt
50	110-3720	1	Plug-Gauge, Oil

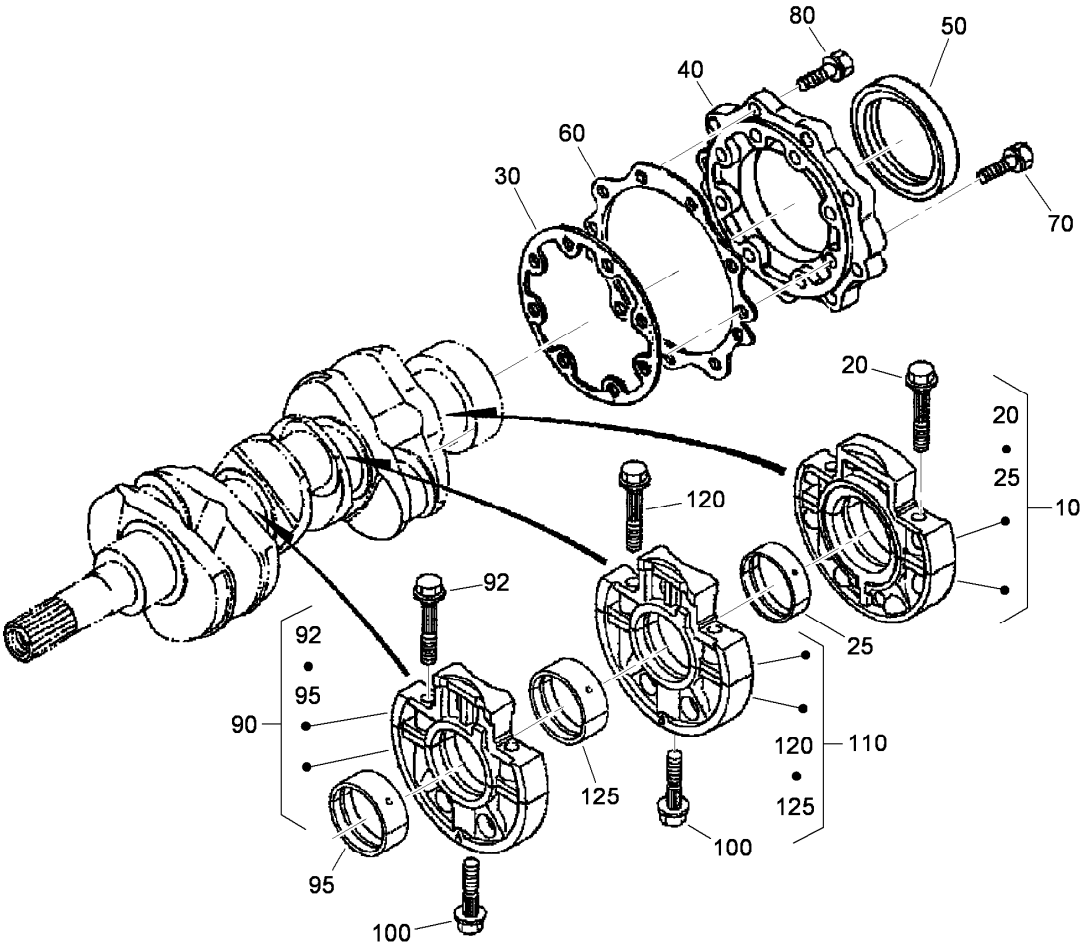

Main Bearing Case Assembly

Ref.	Part Number	Qty.	Description
10	112-7026	1	Wheel Bearing Case ASM
20	98-9484	2	Bolt-Case, Bearing
25	112-7045	1	Metal-Crankshaft
25	112-7039	1	Metal-Crankshaft (0.2Mm)
25	112-7040	1	Metal-Crankshaft (-0.4Mm)
30	98-9634	1	Gasket-Case, Bearing
40	112-7046	1	Cover-Case, Bearing
50	112-0180	1	Seal-Oil
60	112-7037	1	Gasket-Cover, Case
70	98-9352	8	Bolt
80	98-7568	9	Bolt
90	115-4106	1	Main Bearing Case ASM
92	98-9484	2	Bolt-Case, Bearing
95	98-9524	1	Metal-Crankshaft (STD Set)
95	98-9530	1	Bearing-Main (0.2Mm)
95	98-9531	1	Bearing-Main (0.4Mm)
100	98-9485	2	Bolt-Case, Bearing
110	115-4107	1	Main Bearing Case ASM
120	98-9484	2	Bolt-Case, Bearing
125	98-9524	1	Metal-Crankshaft (STD Set)
125	98-9530	1	Bearing-Main (0.2Mm)
125	98-9531	1	Bearing-Main (0.4Mm)

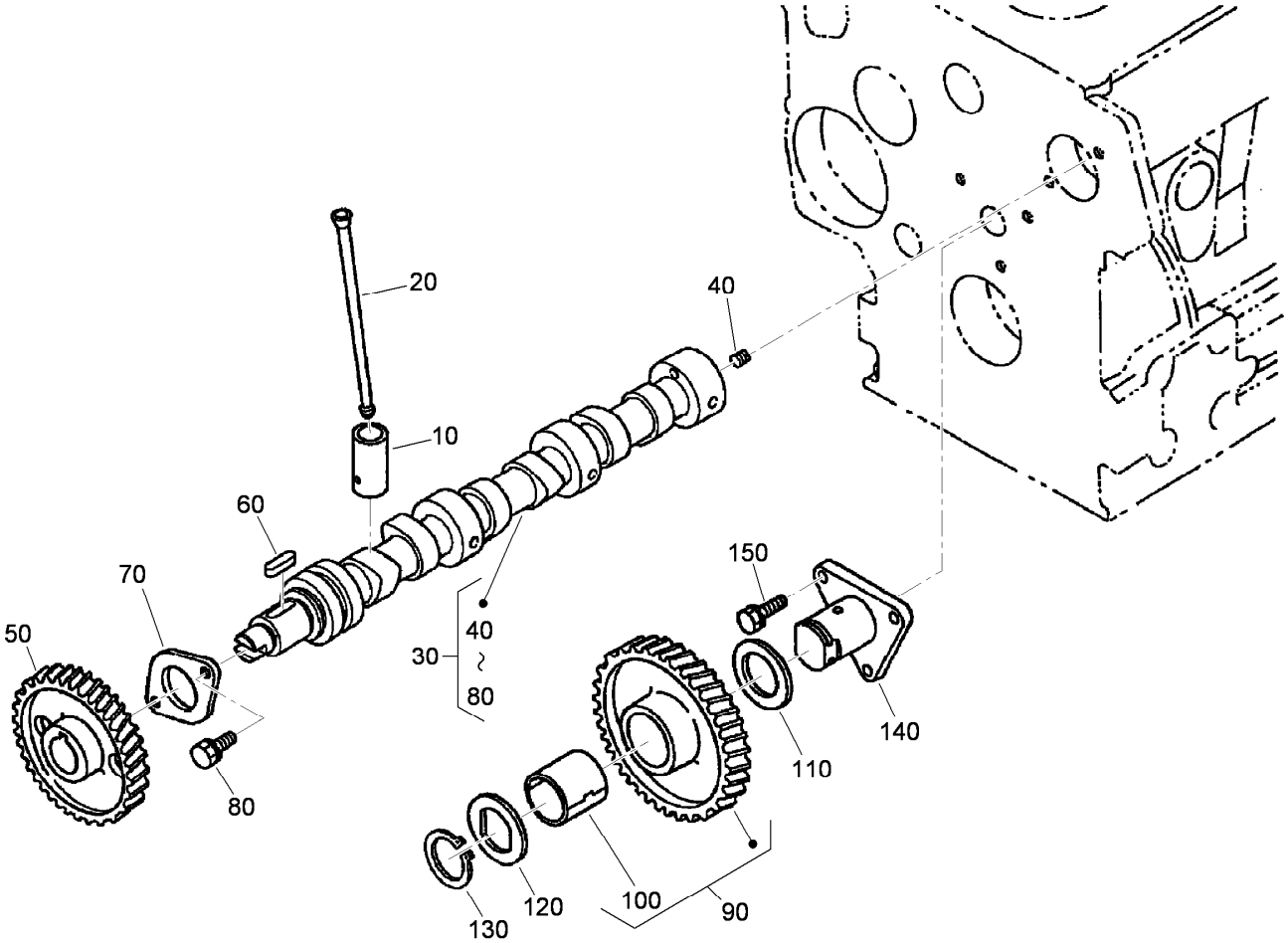

Camshaft and Idle Gear Shaft Assembly

Ref.	*Part Number*	*Qty.*	*Description*
10	112-0185	6	Tappet
20	98-9509	6	Rod-Push
30	108-6576	1	Camshaft ASM
40	98-7449	1	Screw-Set
50	98-9512	1	Gear-Cam
60	98-9378	1	Key-Feather
70	98-9510	1	Stopper-Camshaft
80	98-7692	2	Bolt
90	98-9649	1	Idle Gear ASM
100	98-9650	1	Bushing-Gear, Idle
110	98-9535	1	Collar-Gear, Idle
120	98-9536	1	Collar-Gear, Idle
130	98-9534	1	Circlip-Gear, Idle
140	98-9533	1	Shaft-Gear, Idle
150	98-7692	3	Bolt

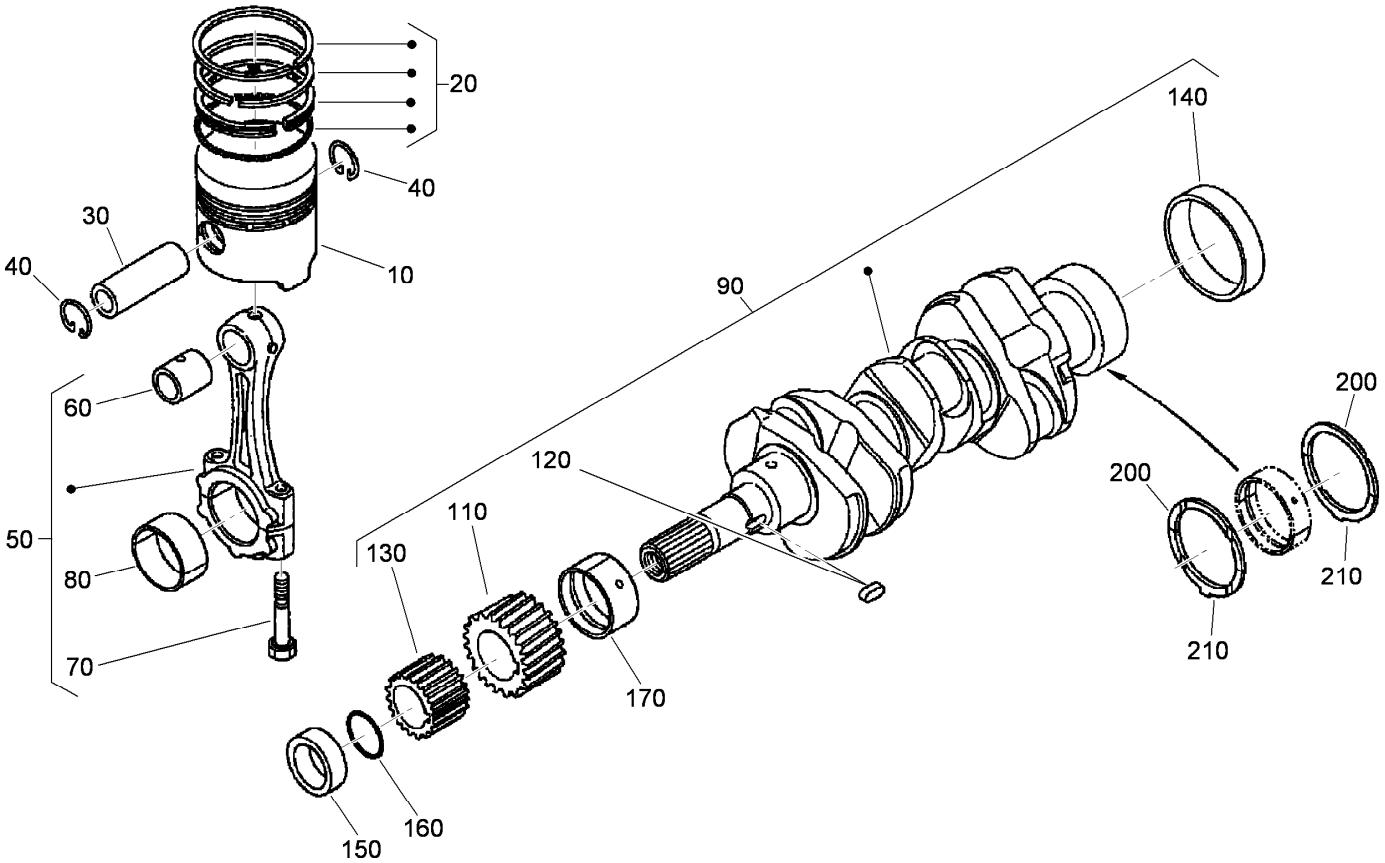

Piston and Crankshaft Assembly

Ref.	Part Number	Qty.	Description
10	112-8404	3	Piston (STD)
10	112-8414	3	Piston (+0.5Mm)
20	98-9551	3	Piston Ring ASM (STD)
20	108-1404	3	Piston Ring ASM (0.5Mm)
30	98-9513	3	Pin-Piston
40	98-9514	6	Circlip-Pin, Piston
50	115-3013	3	Connecting Rod ASM
60	115-3014	3	Bushing-Pin, Piston
70	98-9517	6	Bolt-Rod, Connecting
80	98-9518	3	Metal-Crankpin (STD)
80	98-9519	3	Bearing-Rod (0.2Mm)
80	98-9520	3	Bearing-Rod (0.4Mm)
90	98-9642	1	Crankshaft ASM
110	98-9532	1	Gear-Crankshaft

Ref.	Part Number	Qty.	Description
120	98-9666	1	Key
130	98-9542	1	Gear-Drive, Oil Pump
140	98-9522	1	Sleeve-Crankshaft
150	98-9521	1	Collar-Crankshaft
160	105-3783	1	O-Ring
170	98-9523	1	Metal Crankshaft (STD)
170	98-9528	1	Bearing-Main (-0.2Mm)
170	98-9529	1	Bearing-Main (0.4Mm)
200	98-9413	2	Bearing-Thrust (STD)
200	98-9414	2	Bearing-Thrust (0.2Mm)
200	98-9415	2	Bearing-Thrust (0.4Mm)
210	98-9688	2	Bearing-Thrust (STD)
210	98-9689	2	Bearing-Thrust (0.2Mm)
210	98-9690	2	Bearing-Thrust (0.4Mm)

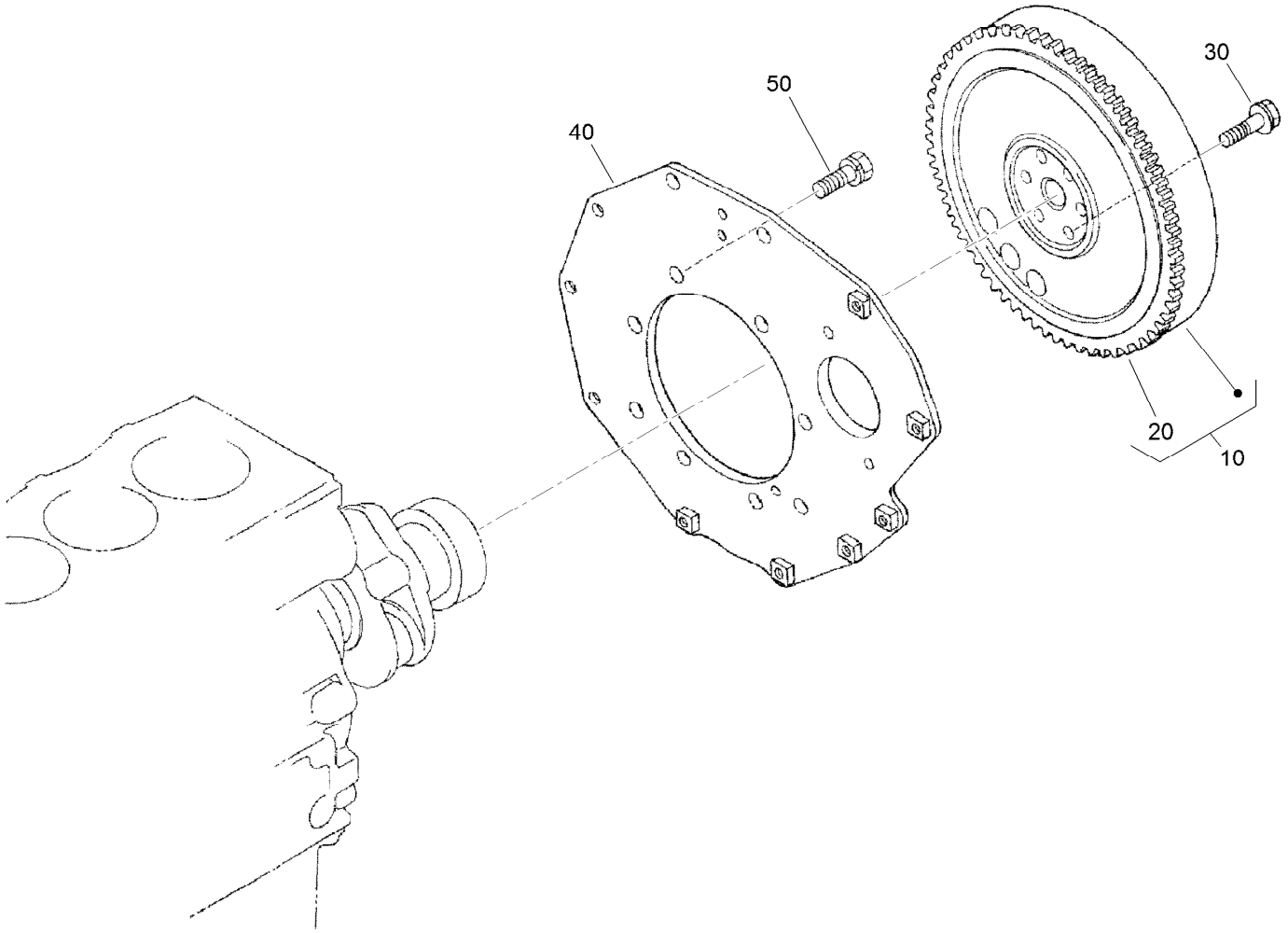

Flywheel Assembly

Ref.	Part Number	Qty.	Description
10	105-3784	1	Flywheel ASM
20	115-3015	1	Gear-Ring
30	98-9537	6	Bolt-Flywheel
40	98-9486	1	Plate-End, Rear
50	98-9392	8	Bolt

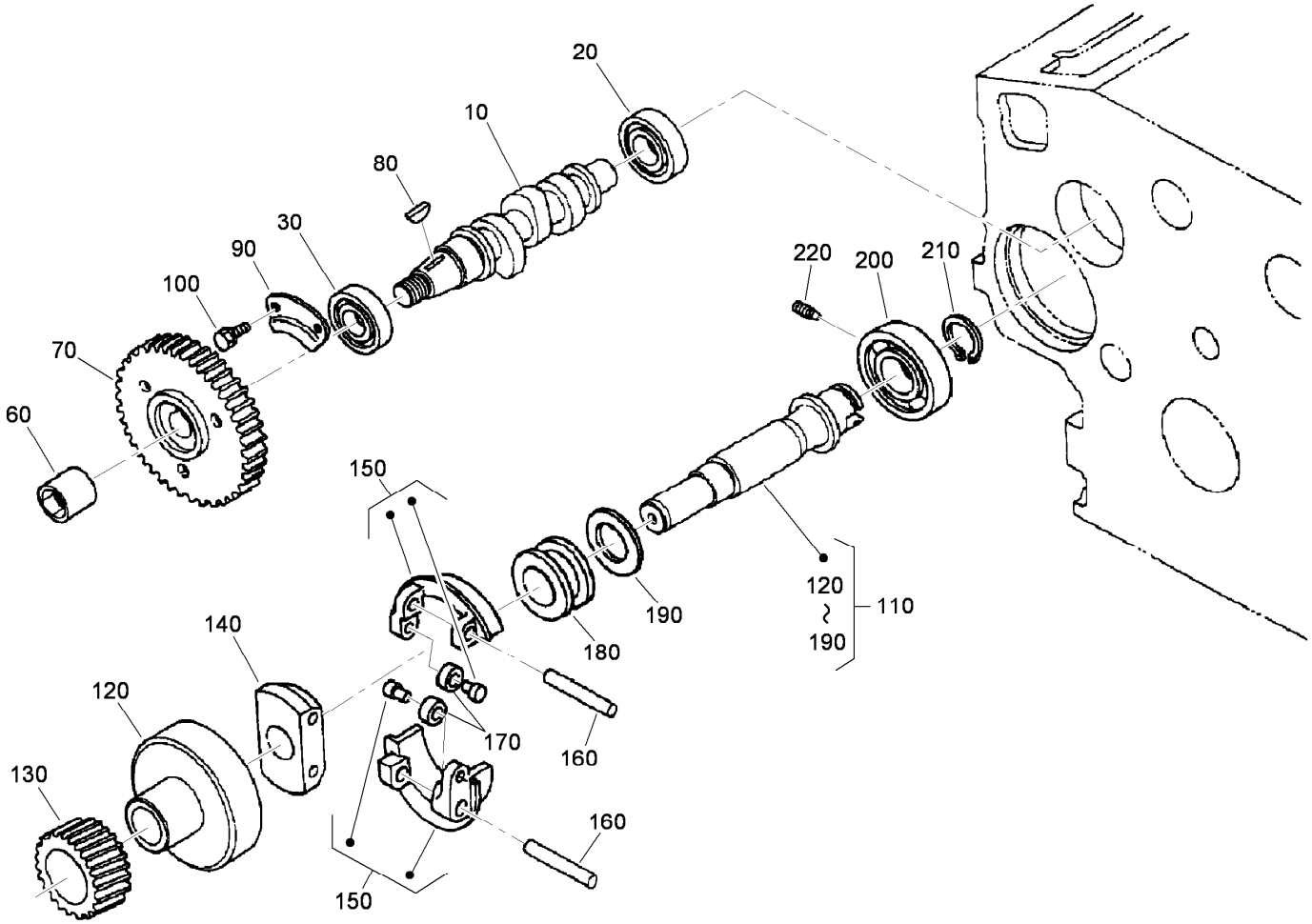

Fuel Camshaft and Governor Shaft Assembly

Ref.	*Part Number*	*Qty.*	*Description*
10	98-9459	1	Camshaft-Fuel
20	107-9077	1	Bearing-Ball
30	107-9078	1	Bearing-Ball
60	98-9590	1	Nut-Cap
70	107-7837	1	Gear-Pump, Injection
80	98-9595	1	Key-Woodruff
90	98-9511	1	Stopper-Fuel, Camshaft
100	98-7692	2	Bolt
110	98-9644	1	Governor Shaft ASM
120	98-9562	1	Holder-Gear, Governor
130	98-9673	1	Gear-Governor
140	98-9561	1	Holder-Weight, Governor
150	98-9559	2	Governor Weight ASM
160	98-9560	2	Shaft-Weight, Governor
170	98-9692	2	Roller
180	98-9563	1	Sleeve-Governor
190	98-9564	1	Washer-Thrust
200	107-9079	1	Bearing-Ball
210	98-9657	1	Circlip-Shaft, Governor
220	98-9565	1	Screw-Set

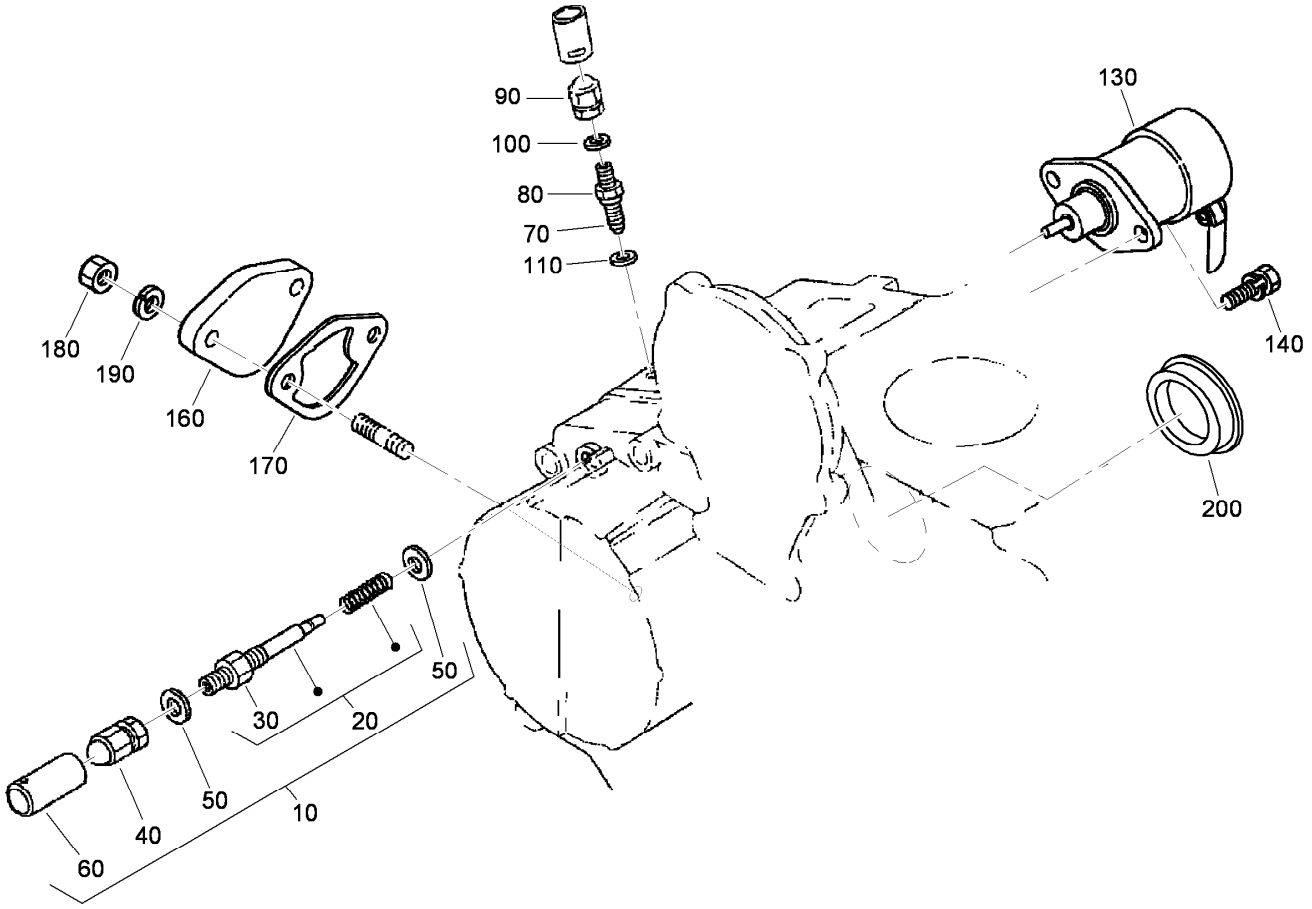

Idle Apparatus and Stop Solenoid Assembly

Ref.	*Part Number*	*Qty.*	*Description*
10	107-7838	1	Apparatus-Idling
20	99-3458	1	Adjusting Bolt ASM
30	98-9439	1	Nut
40	112-0181	1	Nut
50	98-7654	2	Gasket
60	98-7656	1	Cap
70	112-7015	1	Bolt-Adjusting
80	100-2175	1	Nut-Lock
90	112-0181	1	Nut
100	98-7654	1	Gasket
110	107-9081	1	Gasket
130	104-5155	1	Solenoid-Stop
140	115-3039	2	Bolt-HSH
160	99-3514	1	Cover
170	98-9636	1	Gasket-Pump, Fuel
180	98-7572	2	Nut
190	98-7699	2	Washer-Spring
200	112-7016	1	Cover-Pump

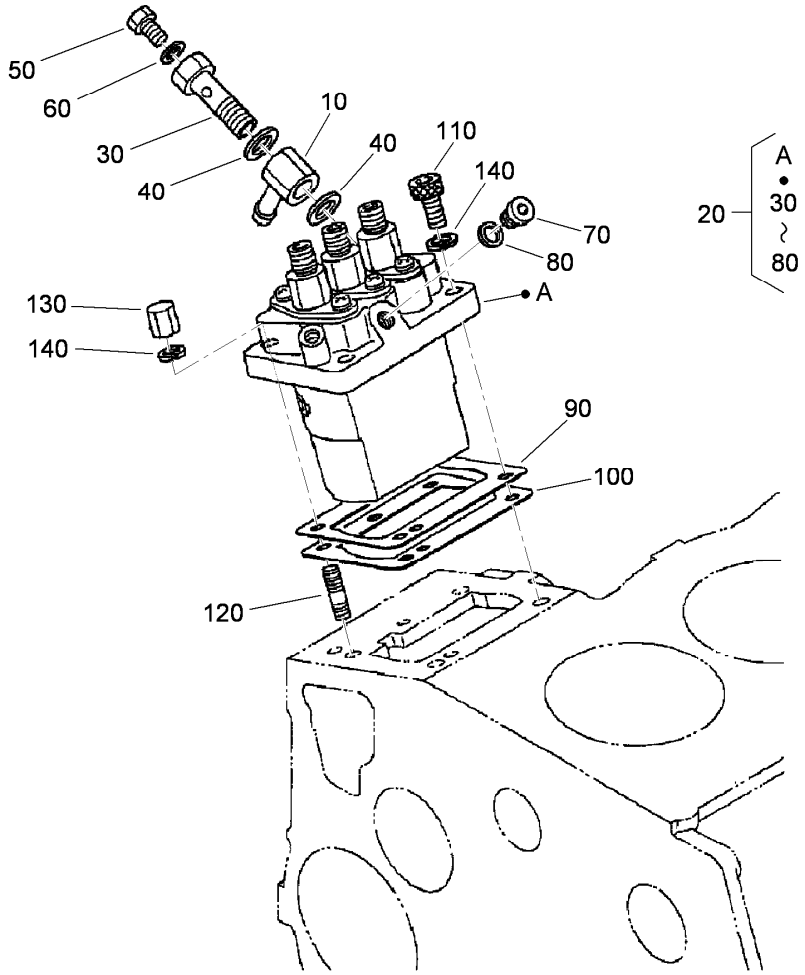

Injection Pump Assembly

Ref.	Part Number	Qty.	Description
10	98-9596	1	Joint-Eye
20	98-9643	1	Injection Pump ASM
30	98-9464	1	Bolt-Joint
40	98-9445	2	Gasket
50	98-9430	1	Screw
60	98-9446	1	Gasket
70	98-9466	1	Plug
80	98-9451	1	Gasket
90	98-9456	1	Shim-Injection (0.20Mm)
90	98-9457	1	Shim-Injection (0.25Mm)
90	115-3045	1	Shim-Injection (0.175Mm)
100	98-9458	1	Shim-Injection (0.30Mm)
100	115-3046	1	Shim-Injection (0.35Mm)
110	98-9361	2	Bolt-HSH
120	98-9438	2	Stud
130	98-9440	2	Nut-Cap
140	98-7699	4	Washer-Spring

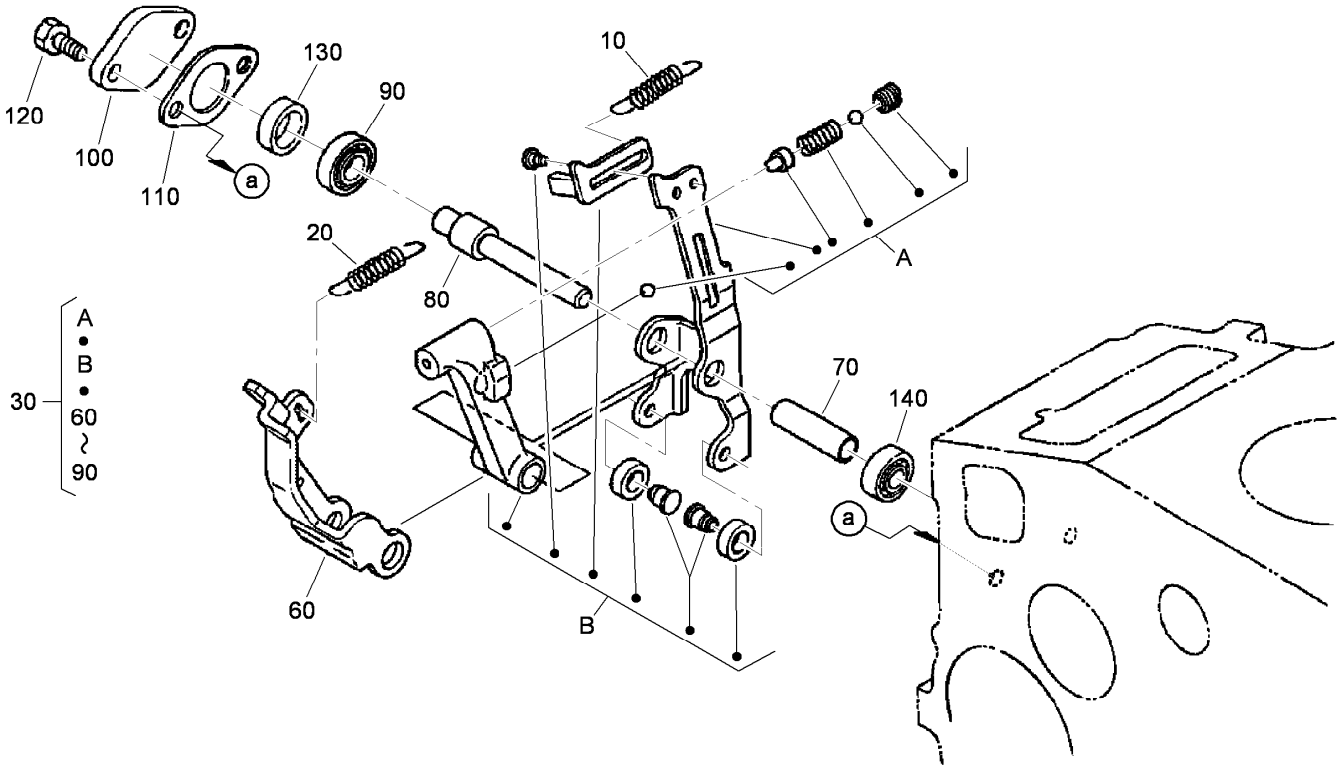

Governor Assembly

Ref.	*Part Number*	*Qty.*	*Description*
10	105-3786	1	Spring-Start
20	107-7839	1	Spring-Governor
30	107-7840	1	Fork Lever ASM
60	107-9084	1	Lever-Fork
70	107-9085	1	Shaft-Lever, Fork
80	107-9086	1	Shaft-Lever, Fork
90	98-9570	1	Bearing-Miniaturize
100	115-4122	1	Cover-Shaft, Fork Lever
110	98-9682	1	Gasket
120	98-9350	2	Bolt
130	98-9567	1	Collar
140	98-9571	1	Bearing-Miniaturize

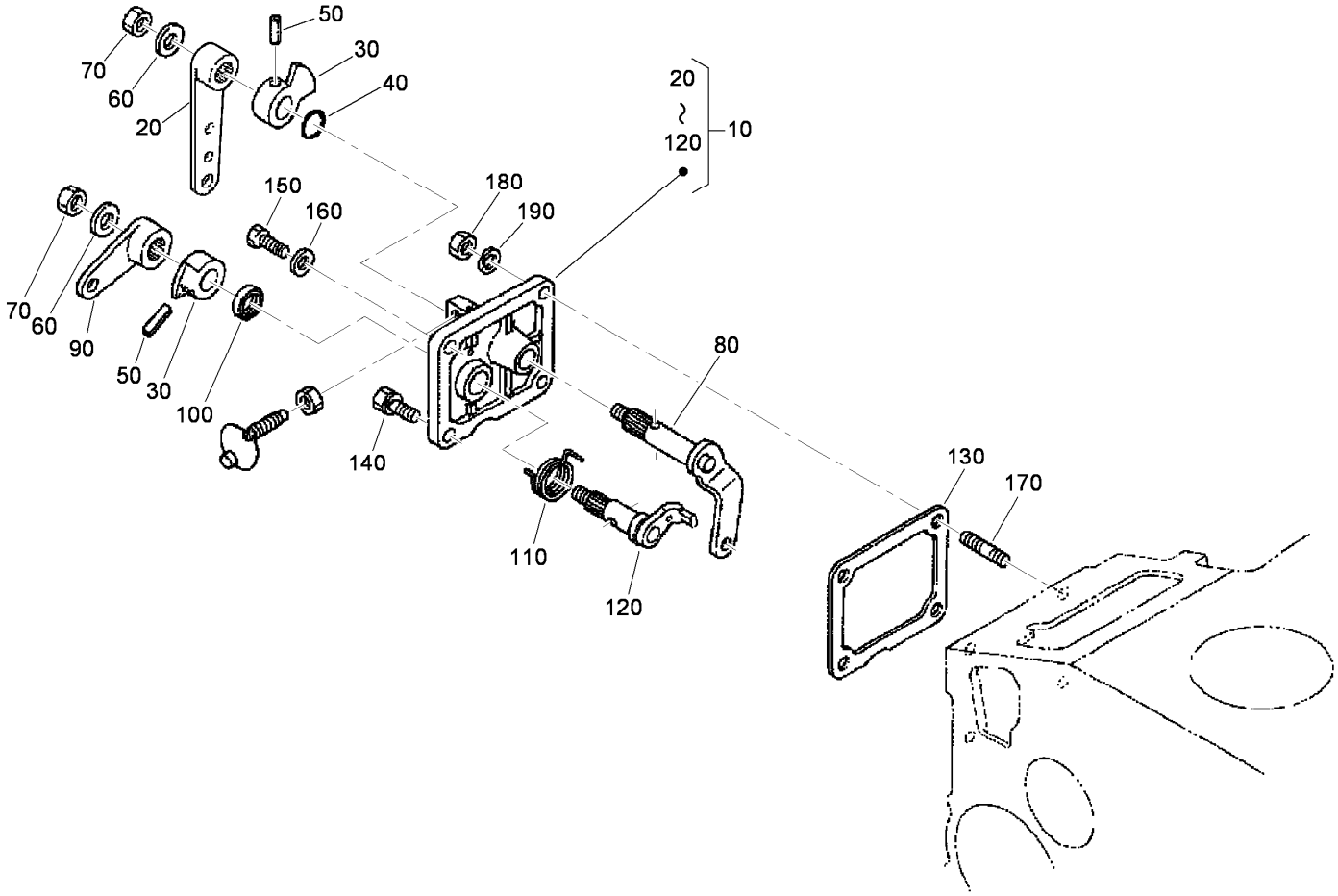

Speed Control Plate Assembly

Ref.	Part Number	Qty.	Description
10	105-3735	1	Control Plate ASM
20	98-9662	1	Lever-Control, Speed
30	98-9572	2	Lever-Control, Speed
40	105-3788	1	O-Ring
50	98-7602	2	Pin-Spring
60	98-9594	2	Washer-Plain
70	98-9589	2	Nut
80	98-9658	1	Governor Lever ASM
90	98-9663	1	Lever-Stop, Engine
100	98-7601	1	Seal-Oil
110	98-9472	1	Spring-Return
120	98-9664	1	Shaft-Lever, Stop
130	98-9637	1	Gasket
140	98-7692	1	Bolt
150	99-8348	1	Bolt
160	98-7654	1	Gasket
170	105-3710	2	Stud
180	98-7572	2	Nut
190	98-7699	2	Washer-Spring

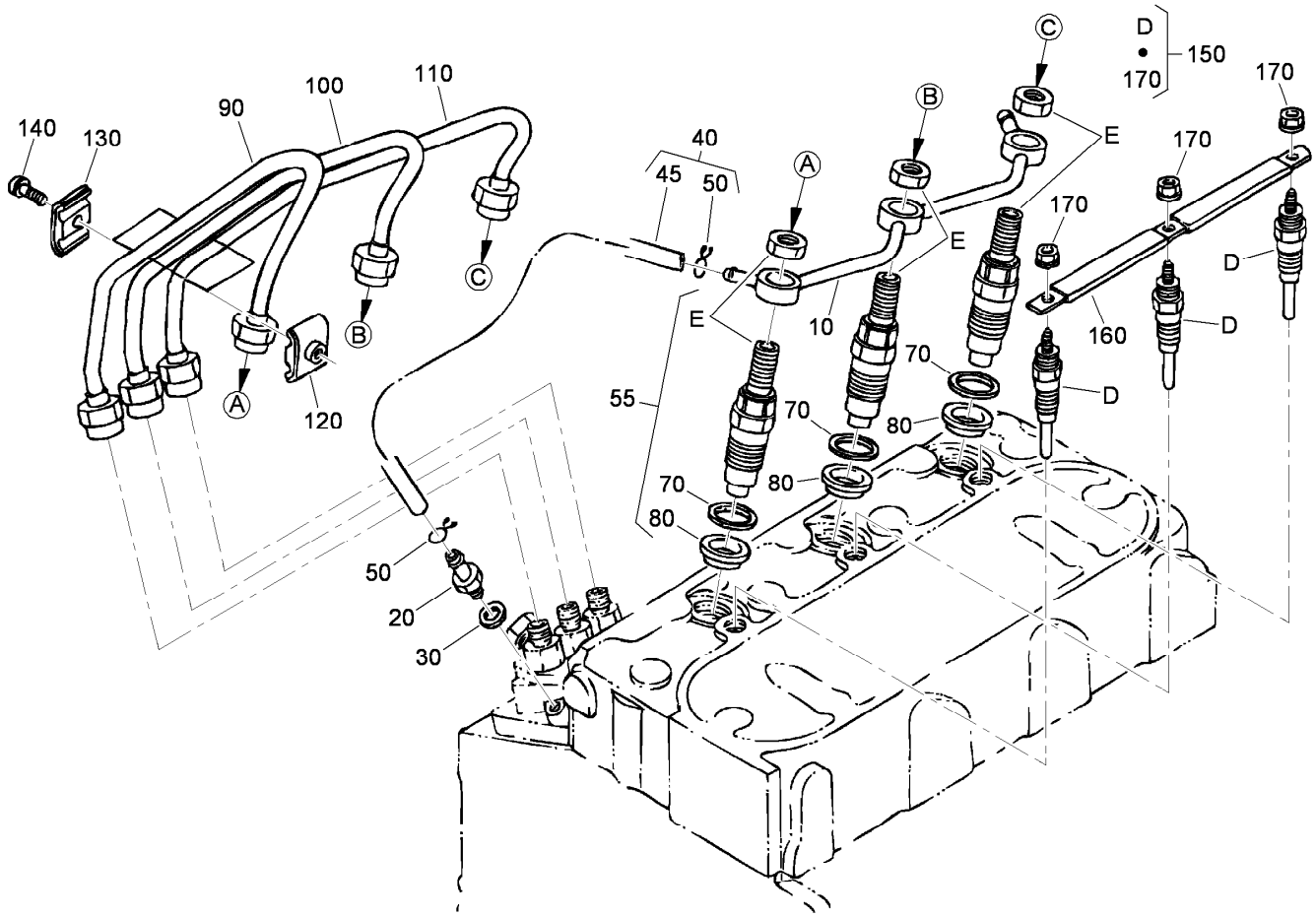

Nozzle Holder and Glow Plug Assembly

Ref.	Part Number	Qty.	Description
10	98-9620	1	Overflow Pipe ASM
20	98-9431	1	Screw-Bleeder, Air
30	98-7654	1	Gasket
40	98-9420	1	Overflow Pipe ASM
45	112-0182	1	Pipe-Overflow
50	98-7671	2	Clip-Pipe
55	108-2866	3	Nozzle Holder Kit
70	107-7841	3	Gasket
80	107-7842	3	Seal-Heat
90	98-9622	1	Pipe-Injection
100	98-9654	1	Pipe-Injection
110	98-9655	1	Pipe-Injection
120	98-7682	2	Clamp-Pipe
130	98-7683	2	Clamp-Pipe
140	98-7684	2	Screw (W/Washer)
150	115-3019	3	Plug-Glow
160	98-9631	3	Cord-Plug, Glow
170	99-8377	1	Nut-Flange

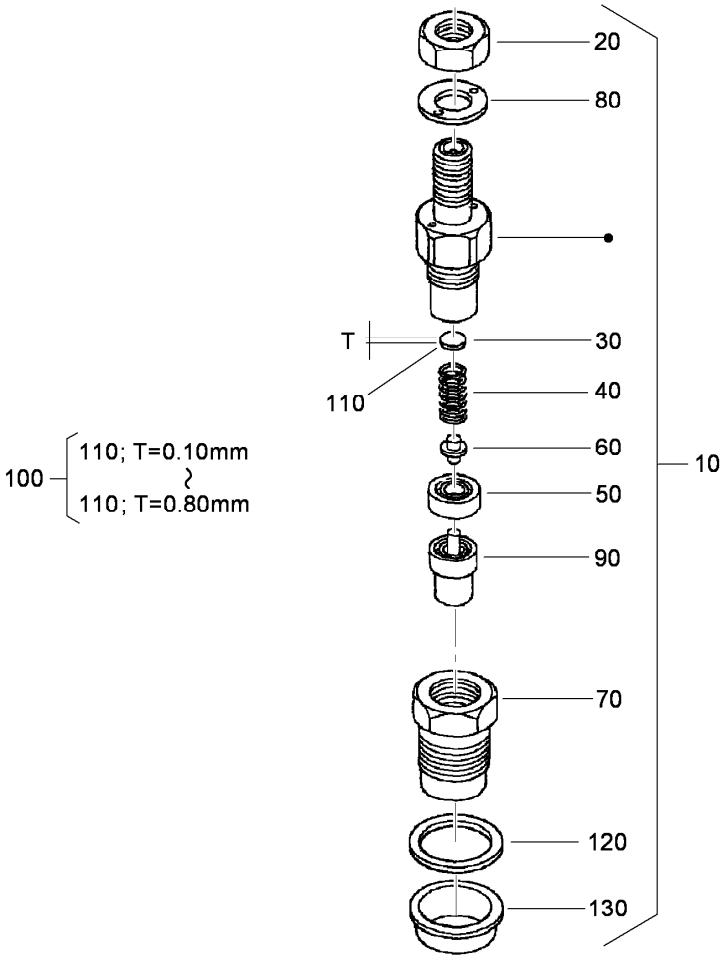

Nozzle Holder Assembly

Ref.	*Part Number*	*Qty.*	*Description*
10	108-2866	3	Nozzle Holder Kit
20	99-8301	3	Nut
30	99-8302	3	Washer-Adjusting
40	99-8303	3	Spring-Nozzle
50	99-8304	3	Spacer-Distance
60	99-8305	3	Rod-Push
70	99-8306	3	Nut-Nozzle
80	99-8307	3	Washer-Plain
90	107-7826	3	Piece-Nozzle
100	99-8309	3	Adjusting Washer ASM
110	99-8310	3	Washer-Adjust (0.10Mm)
110	99-8311	3	Washer-Adjust (0.20Mm)
110	99-8312	3	Washer-Adjust (0.30Mm)
110	99-8313	3	Washer-Adjust (0.40Mm)
110	99-8314	3	Washer-Adjust (0.50Mm)
110	99-8315	3	Washer-Adjust (0.52Mm)
110	99-8316	3	Washer-Adjust (0.54Mm)
110	99-8317	3	Washer-Adjust (0.56Mm)
110	99-8318	3	Washer-Adjust (0.58Mm)
110	99-8319	3	Washer-Adjust (0.80Mm)
120	107-7841	3	Gasket
130	107-7842	3	Seal-Heat

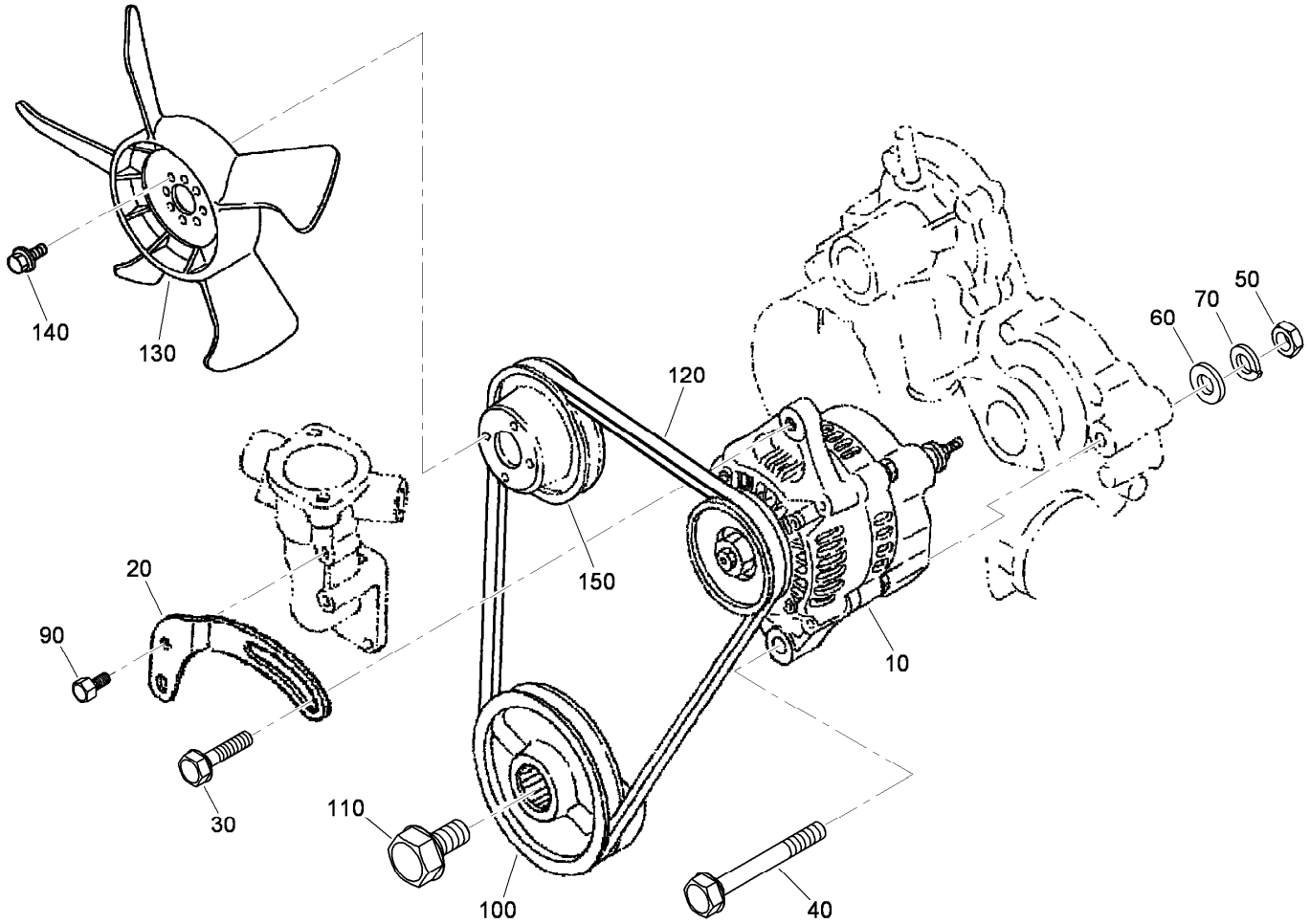

Alternator and Pulley Assembly

Ref.	*Part Number*	*Qty.*	*Description*
10	98-9474	1	Alternator ASM
20	112-7047	1	Stay-Dynamo
30	108-7088	1	Bolt
40	98-9360	1	Bolt
50	98-7737	1	Nut
60	98-9366	1	Washer-Plain
70	98-7738	1	Washer-Spring
90	98-7692	1	Bolt
100	99-3456	1	Pulley-Drive, Fan
110	98-9585	1	Bolt
120	99-3467	1	V-Belt
130	99-3461	1	Fan
140	99-8363	4	Bolt-Flange
150	99-3453	1	Pulley-Fan

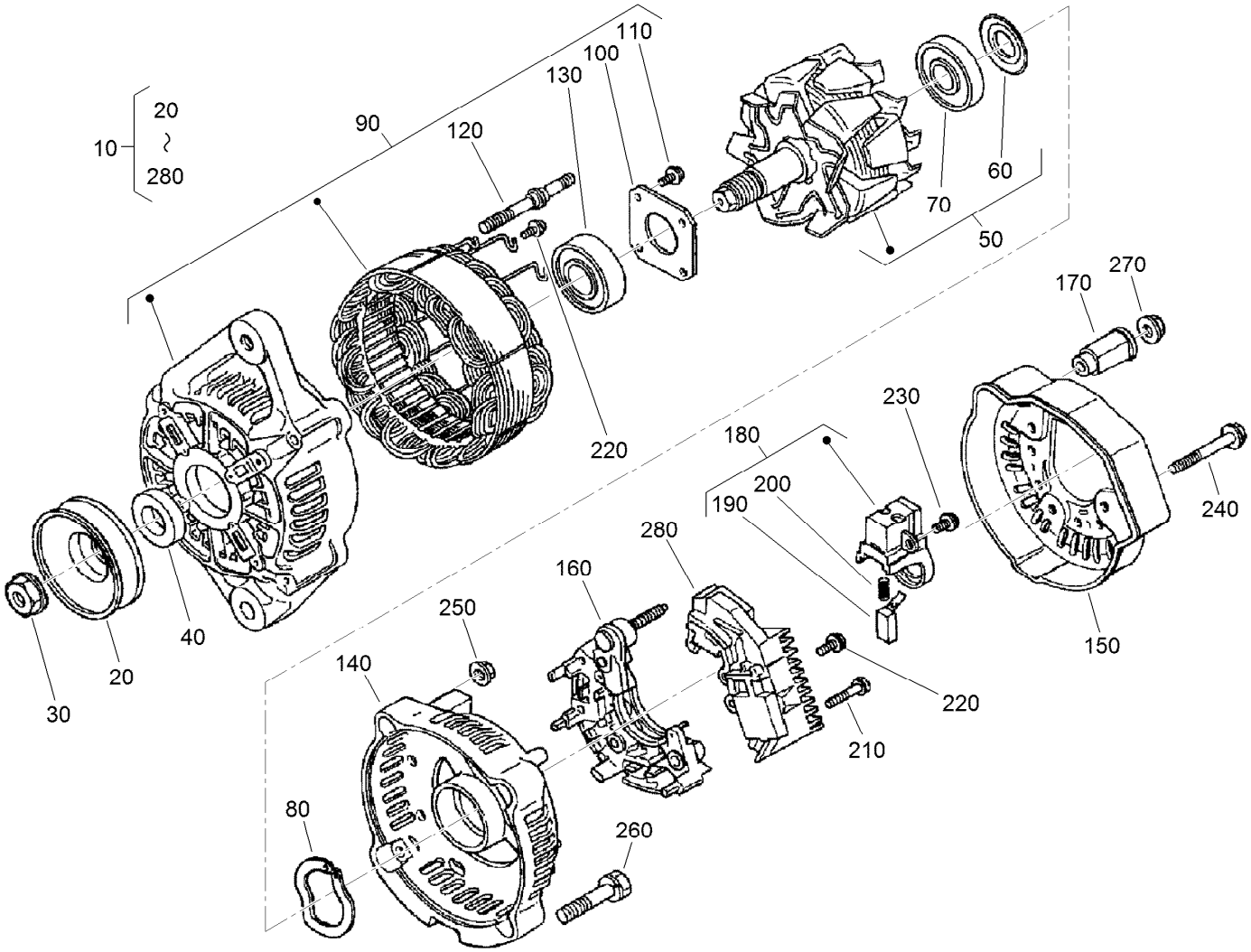

Alternator Components Assembly

Ref.	Part Number	Qty.	Description
10	98-9474	1	Alternator ASM
20	98-9453	1	Pulley-Dynamo
30	98-7708	1	Nut
40	98-7709	1	Collar
50	107-0136	1	Rotor ASM
60	98-7711	1	Cover-Bearing
70	107-0138	1	Bearing-Ball
80	98-7713	1	Washer-Thrust
90	107-0139	1	Drive End Frame ASM
100	98-7715	1	Plate-Retainer
110	98-7716	4	Screw-Head, Round
120	98-7717	2	Bolt-Through
130	107-0137	1	Bearing-Ball
140	107-9087	1	Frame-End

Ref.	Part Number	Qty.	Description
150	107-0140	1	Cover-End
160	98-7721	1	Rectifier ASM
170	98-7722	1	Bushing-Insulation
180	107-0141	1	Brush Holder ASM
190	98-7724	2	Brush
200	98-7725	2	Spring-Brush
210	98-7726	2	Screw-Head, Round
220	98-7727	6	Screw-Head, Round
230	98-7728	1	Screw-Head, Round
240	98-7729	3	Bolt
250	98-7730	2	Nut
260	98-7731	2	Bolt
270	98-7732	1	Nut
280	110-3799	1	Regulator ASM

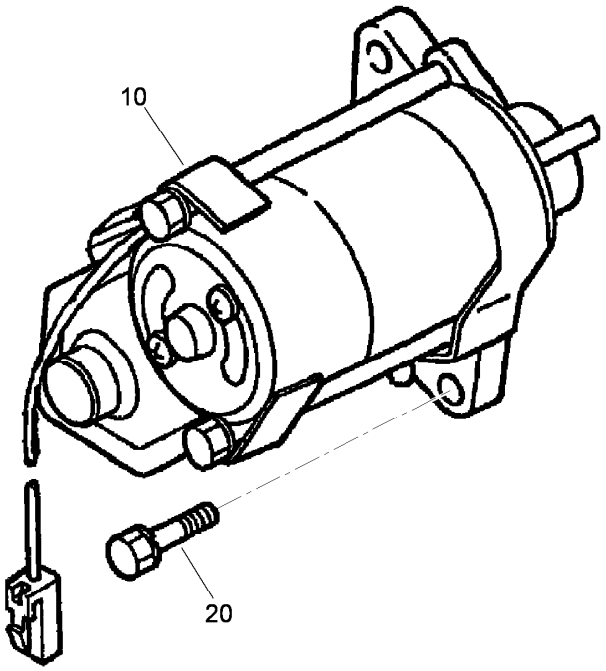

Starter Assembly

Ref.	*Part Number*	*Qty.*	*Description*
10	98-9705	1	Starter ASM
20	98-7697	2	Bolt

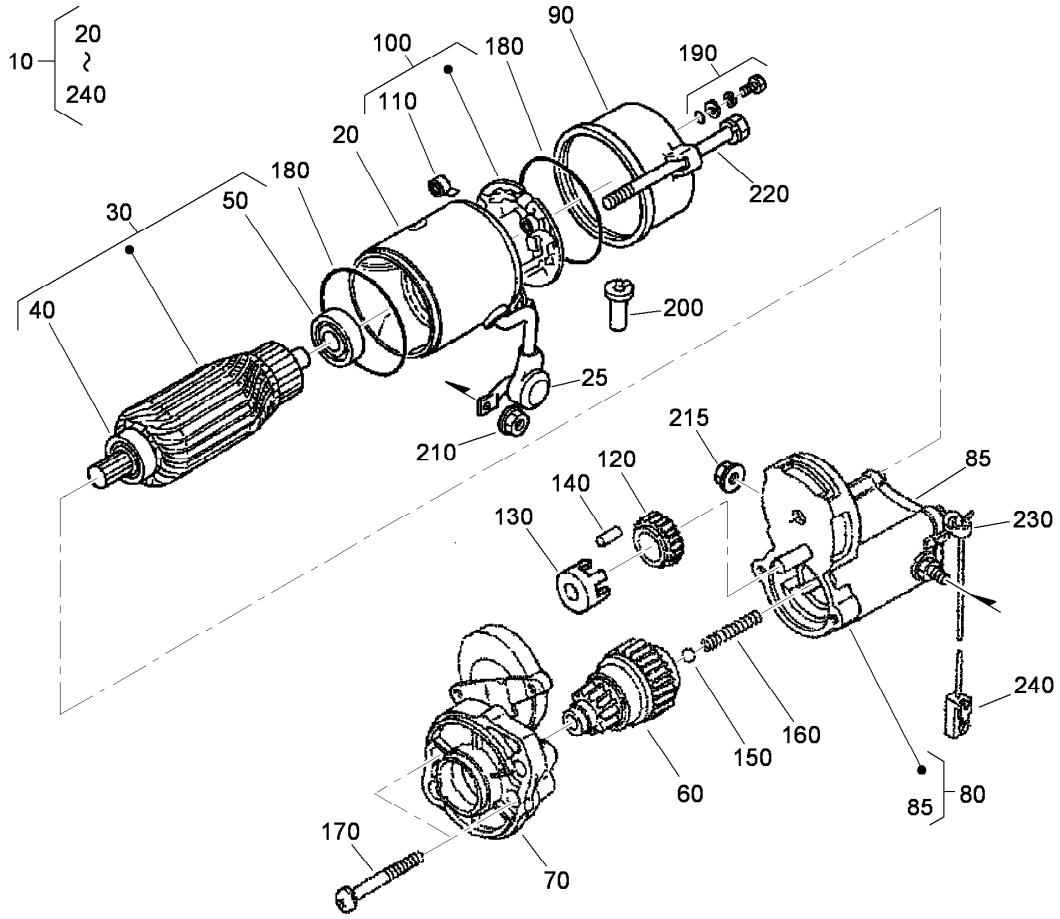

Starter (Component Part) Assembly No. 98-9705

Ref.	Part Number	Qty.	Description
10	98-9705	1	Starter ASM
20	104-8608	1	Yoke ASM
25	99-8375	1	Cover
30	98-7742	1	Armature ASM
40	98-7744	1	Bearing
50	98-7743	1	Bearing
60	99-8373	1	Clutch-Running, Over
70	99-8374	1	Frame-End, Drive
80	105-3746	1	Magnetic Switch ASM
85	105-2886	1	Cover ASM
90	98-7748	1	Frame-End
100	98-7749	1	Brush Holder ASM
110	98-7750	4	Spring-Brush
120	98-7751	1	Gear
130	98-7752	1	Retainer
140	98-7753	5	Roller
150	98-7755	1	Ball
160	98-7754	1	Spring
170	98-7756	2	Bolt
180	98-7757	2	O-Ring
190	98-7758	2	Bolt ASM
200	98-7759	1	Pipe-Drain
210	99-8371	1	Nut-Hex
215	99-8376	1	Nut-Hex
220	100-9240	2	Bolt
230	98-9712	1	Band-Cover
240	98-9711	1	Cord-Solenoid, Stop

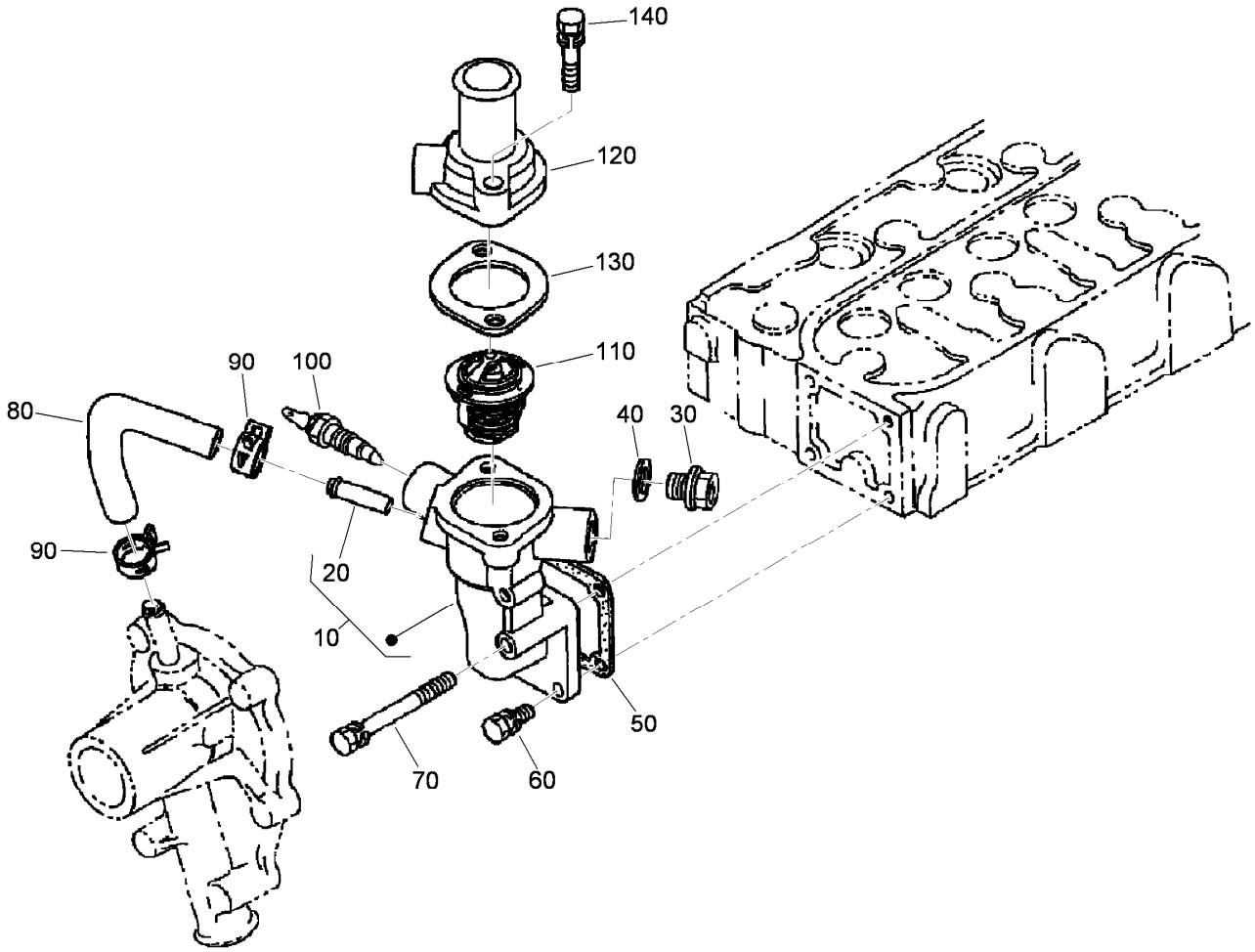

Water Flange and Thermostat Assembly

Ref.	Part Number	Qty.	Description
10	98-9713	1	Water Flange ASM
20	98-9580	1	Pipe-Return, Water
30	105-3747	1	Plug
40	99-3583	1	Gasket
50	98-9638	1	Gasket-Flange, Water
60	98-7692	3	Bolt
70	98-9356	1	Bolt
80	98-9578	1	Pipe-Return, Water
90	98-9579	2	Band-Pipe
100	98-9719	1	Thermoswitch
110	98-7778	1	Thermostat ASM
120	98-9471	1	Cover-Thermostat
130	105-3748	1	Gasket-Thermostat
140	98-7777	2	Bolt

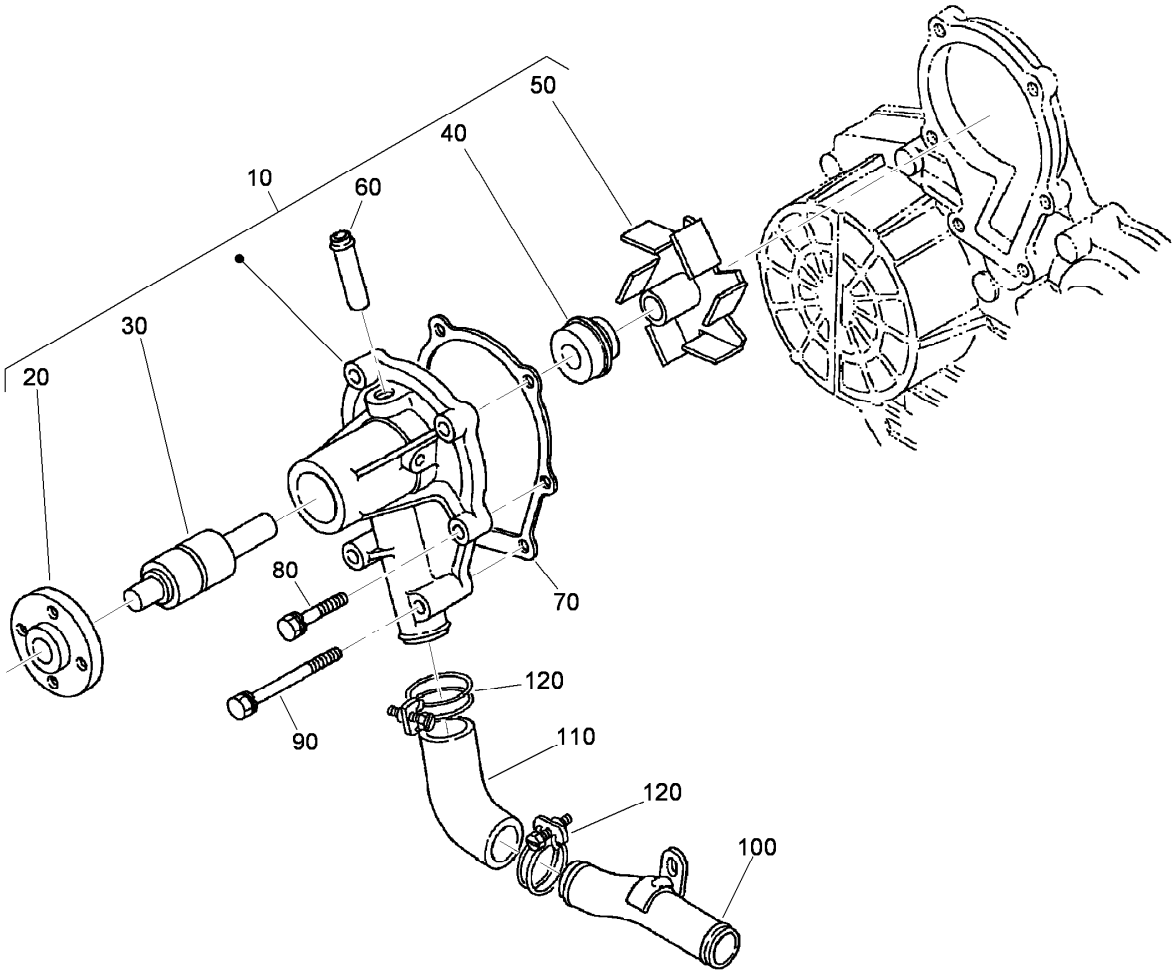

Water Pump Assembly

Ref.	*Part Number*	*Qty.*	*Description*
10	107-9089	1	Water Pump ASM
20	99-3516	1	Flange-Pump, Water
30	99-3517	1	Bearing-Pump, Water
40	105-3750	1	Mechanical Seal ASM
50	112-7017	1	Impeller-Pump, Water
60	115-3447	1	*obs* Pipe-Return, Water
70	99-3454	1	Gasket-Pump, Water
80	98-9353	4	Bolt
90	98-9357	2	Bolt
100	98-9716	1	Pipe-Water
110	107-9091	1	Pipe-Water
120	98-9717	2	Clamp

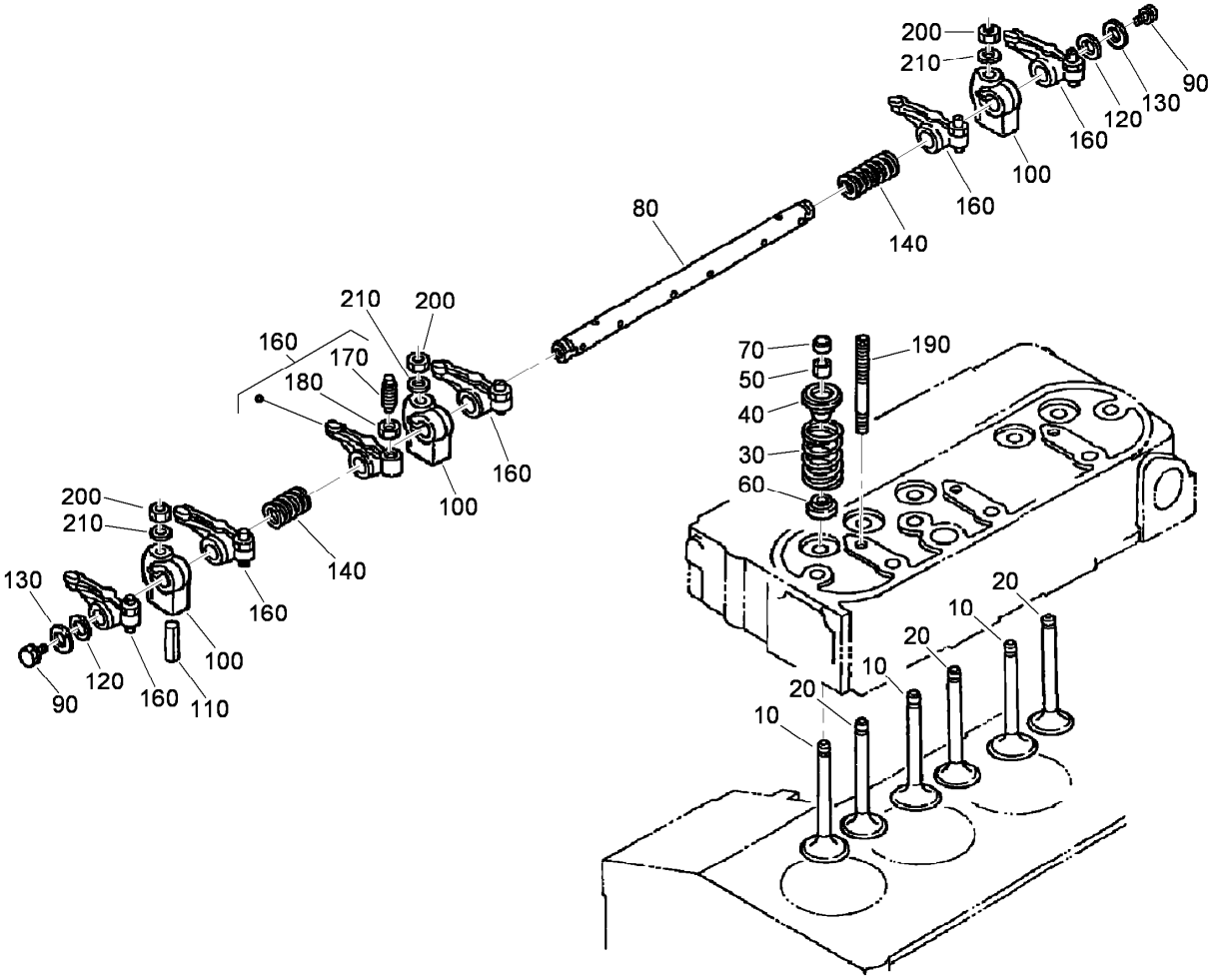

Valve and Rocker Arm Assembly

Ref.	Part Number	Qty.	Description
10	112-7018	3	Valve-Inlet
20	112-7021	3	Valve-Exhaust
30	98-9648	6	Spring-Valve
40	107-9092	6	Retainer-Spring
50	98-9390	6	Collet-Spring, Valve
60	99-8385	6	Seal-Stem, Valve
70	98-9497	6	Cap-Valve
80	105-3790	1	R-Arm Shaft ASM
90	100-9265	2	Bolt
100	98-9505	3	Bracket-Arm, Rocker
110	105-3758	1	Pin-Spring
120	98-9507	2	Washer-Shaft, Rocker Arm
130	110-3832	2	Washer-Plain
140	98-9504	2	Spring-Arm, Rocker
160	112-7020	6	Rocker Arm ASM
170	98-9502	6	Screw-Adjusting
180	98-9503	6	Nut
190	98-9506	3	Stud
200	98-9393	3	Nut
210	98-9385	3	Washer-Flat

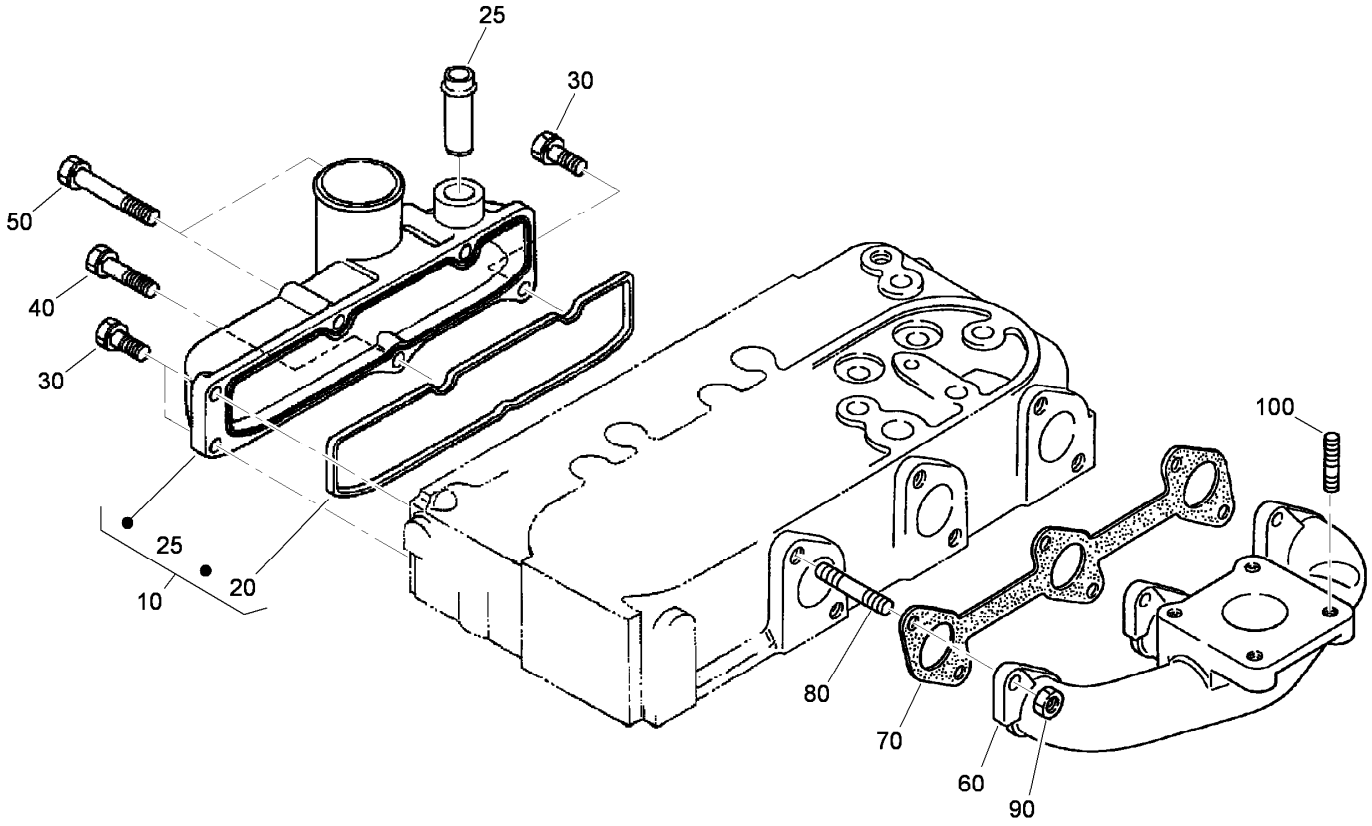

Inlet and Exhaust Manifold Assembly

Ref.	*Part Number*	*Qty.*	*Description*
10	107-7843	1	Manifold Inlet ASM
20	98-9609	1	Gasket-Manifold, Inlet
25	98-9492	1	Joint-Pipe, Breather
30	98-7605	3	Bolt
40	98-9353	1	Bolt
50	105-3797	2	Bolt
60	107-9093	1	Manifold-Exhaust
70	99-8327	1	Gasket-Manifold, Exhaust
80	98-9588	6	Stud
90	98-9665	6	Nut
100	98-7769	4	Stud

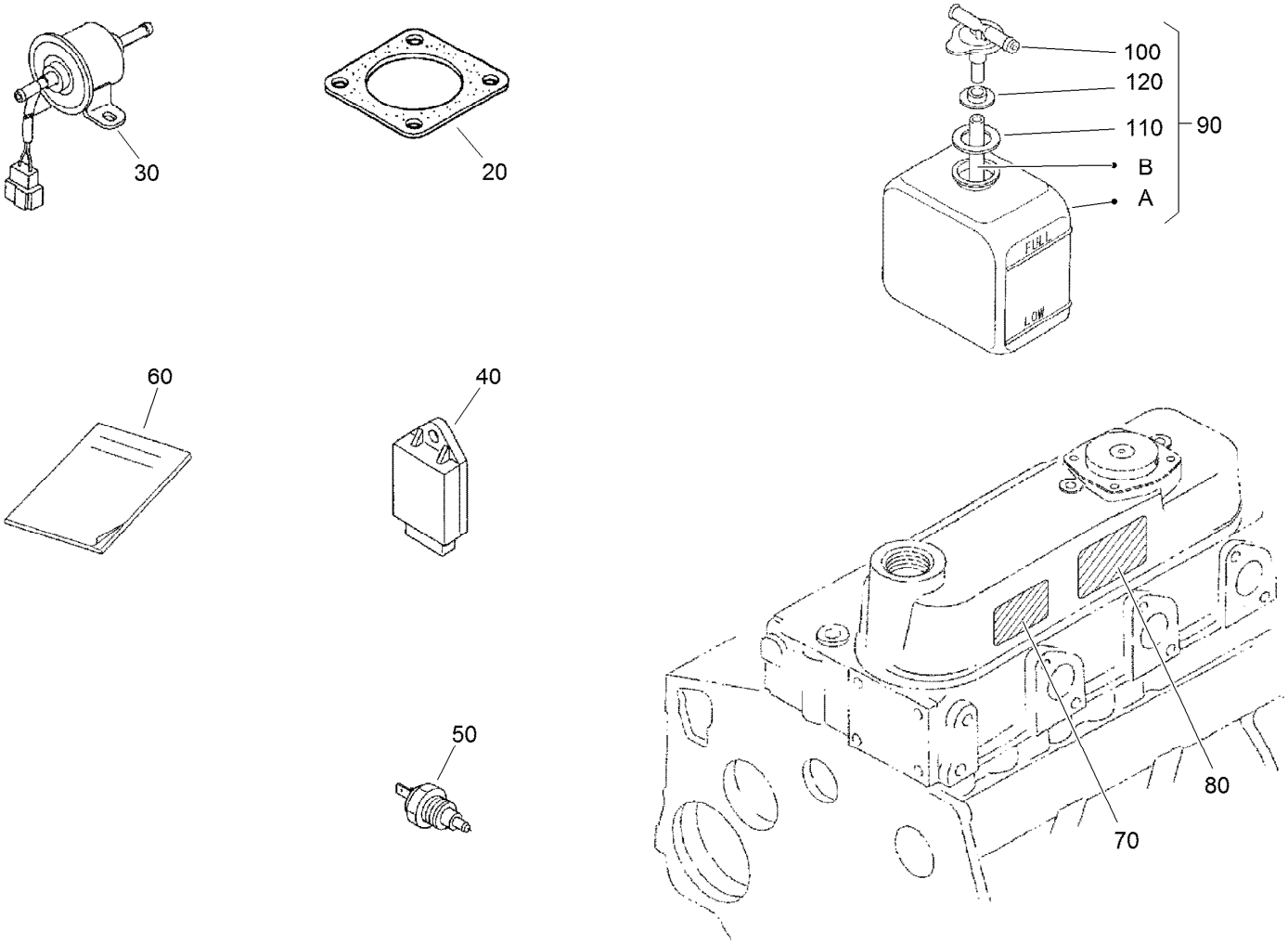

Operator Manual and Miscellaneous Engine Parts

Ref.	*Part Number*	*Qty.*	*Description*
20	99-8343	1	Gasket-Muffler
30	107-0122	1	Pump-Fuel, Electric
40	98-7611	1	Controller-Glow
50	106-7772	1	Thermoswitch
60	115-4104	1	Operator Manual
70	110-0806	1	Decal-Caution
80	110-3843	1	Label-Instruction
90	104-9318	1	Bottle-Overflow
100	115-4132	1	Cap
110	105-3755	1	Gasket
120	105-3756	1	Plate

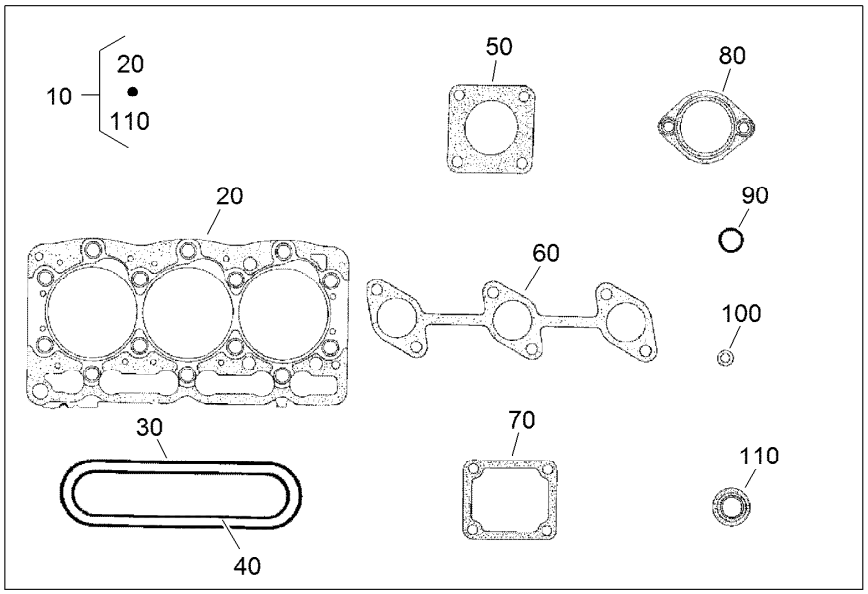

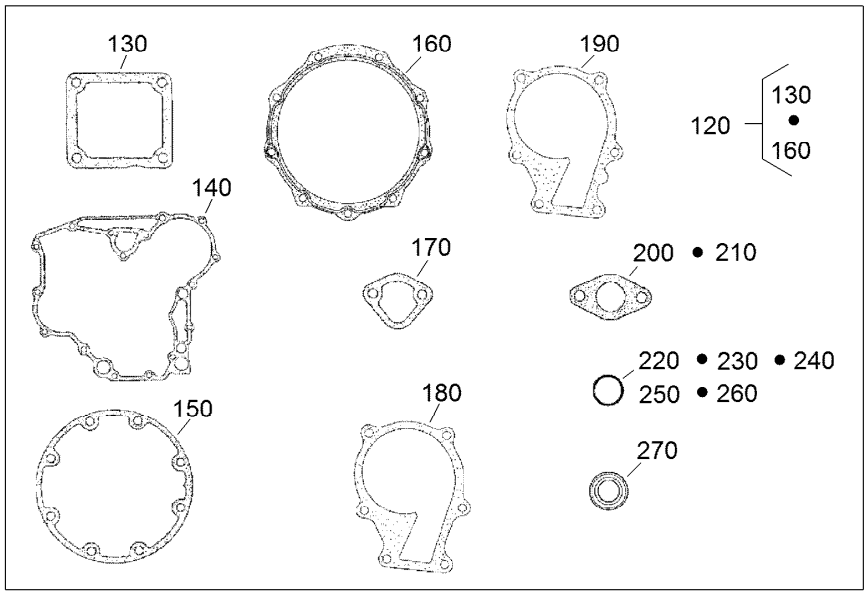

Upper and Lower Gasket Kits

Ref.	Part Number	Qty.	Description
10	107-7848	1	Upper Gasket Kit
20	108-6573	1	Gasket-Head, Cylinder
30	98-9615	1	Gasket-Cover, Head
40	98-9609	1	Gasket-Manifold, Inlet
50	99-8343	1	Gasket-Muffler
60	99-8327	1	Gasket-Manifold, Exhaust
70	98-9638	1	Gasket-Flange, Water
80	105-3748	1	Gasket-Thermostat
90	99-3446	2	O-Ring
100	98-9454	3	Gasket
110	99-8385	6	Seal-Stem, Valve
120	107-9095	1	Lower Gasket Kit
130	98-9637	1	Gasket
140	98-9633	1	Gasket-Case, Gear

Ref.	Part Number	Qty.	Description
150	98-9634	1	Gasket-Case, Bearing
160	112-7037	1	Gasket-Cover, Case
170	98-9636	1	Gasket-Pump, Fuel
180	98-9632	1	Gasket-Pump, Water
190	99-3454	1	Gasket-Pump, Water
200	98-9682	1	Gasket
210	98-9683	1	Gasket-Cover, Solenoid
220	105-3781	2	O-Ring
230	105-3777	2	O-Ring
240	105-3783	1	O-Ring
250	105-3776	1	O-Ring
260	105-3788	1	O-Ring
270	98-7601	1	Seal-Oil

Attachments and Accessories

For 03171 Reelmaster 3100-D Traction Unit With Sidewinder

Product Name	Model/Part
27in Lift Arm Kit	03172
32in Lift Arm Kit	03173
5-Blade 27in DPA Cutting Unit	03180
8-Blade 27in DPA Cutting Unit	03181
8-blade 32in DPA Cutting Unit	03182
11-blade 27in DPA Cutting Unit	03183
27in Verticutter	03184
Gauge Bar Assembly	108-6715
Premium Seat Kit	30629
Arm Rest Kit	30707
Work Light Kit	30841

Notes:

TORO®

Count on it.