Form No. 3382-774 Rev B

TORO®

Count on it.

Parts Catalog

# TX 525 Compact Utility Loader

**Model No. 22323—Serial No. 314000001 and Up**

**Model No. 22323G—Serial No. 314000001 and Up**

Register at www.Toro.com.
Original Instructions (EN)

CE

*3382-774* B

# Ordering Replacement Parts

To order replacement parts, please supply the part number, the quantity, and the description of each part desired.

**Understanding Reference Numbers**

Each identified part in an illustration has a reference number. The reference number for a part also appears in the parts list, along with other information about the part.

This catalog uses two special reference number formats, one to indicate parts in a service assembly and another to indicate the quantity of a given part in an illustration.

**Service Assembly Reference Numbers**

Parts in service assemblies have reference numbers in the form a:b. The a represents the reference number of the entire service assembly and the b represents a sequential number unique to each part within the service assembly.

For example, a wheel assembly might be identified by reference number 6, the tire by 6:1, the valve by 6:2, and the wheel by 6:3. When you order the assembly identified by reference number 6, you receive all parts identified by reference numbers 6:1,6:2, and 6:3. However, you may also order any part individually. Reference numbers of this type appear in illustration and in parts lists.

**Reference Numbers Indicating Quantity**

In an illustration, if a reference number indicates more than one part, the reference number has the form nX y. The n represents the quantity of the part, the X is the multiplication symbol, and the y represents the reference number.

For example, in an illustration, the reference number 2X 37 means that two of the parts identified by reference number 37 are indicated.

# List of Abbreviations

**AR:** as required

**ASM:** assembly

**BBC:** blade brake control

**BHTF:** button head thread forming

**CARR:** carriage

**CCW:** counter clockwise

**CW:** clockwise

**DEG:** degrees

**DPA:** Dual Point Adjustment

**ECM:** electronic control module

**EXT:** external

**FH:** flat head

**GA:** gauge

**HD:** heavy-duty

**HF:** hex flange

**HH:** hex head

**HHF:** hex head flange

**HHFTF:** hex head flange thread forming

**HJ:** hex jam

**HLH:** hex lag head

**HOC:** height-of-cut

**HP:** high pressure

**HSBH:** hex socket button head

**HSFH:** hex socket flat head

**HSH:** hex socket head

**HWH:** hex washer head

**HWHTF:** hex washer head thread forming

**HYD:** hydraulic

**LH:** left hand

**LP:** low pressure

**LPG:** Liquefied Petroleum Gas

**NI:** nylon insert

**NPTF:** national pipe thread fine

**PFH:** phillips flat head

**PPH:** phillips pan head

**PPHTF:** phillips pan head thread forming

**PRH:** phillips round head

**PTH:** phillips truss head

**PTO:** power-take-off

**RH:** right hand

**ROPS:** roll-over protection system

**RRB:** rear roller brush

**SFH:** slotted fillister head

**SHH:** slotted hex head

**SHWH:** slotted hex washer head

**SPH:** slotted pan head

**SQH:** square head

**SRH:** slotted round head

**STD:** standard

**TAP:** self tapping

**TTH:** torx truss head

# Contents

Main Frame and Fuel Tank Assembly . . . 4
Track and Traction Assembly . . . 5
Parking Brake Assembly . . . 6
Loader Tower, Fuel Pump and Drive Assembly . . . 7
Traction Hydraulic Assembly . . . 9
Hydraulic Pump Assembly No. 106-9590 and 106-9591 . . . 11
Hydraulic Motor Assembly No. 106-7654 . . . 12
Radiator and Air Cleaner Assembly . . . 13
Air Cleaner Assembly No. 117-9989 . . . 15
Hydraulic Pump and Filter Assembly . . . 16
Hydraulic Pump Assembly No. 106-9589 . . . 18
Control Panel Assembly . . . 19
Traction Control Assembly . . . 21
Principal Hydraulic Assembly . . . 22
Two Spool Valve Assembly No. 106-9307 . . . 24
One Spool Valve Assembly No. 104-2831 . . . 25
Loader Arm Assembly . . . 26
Loader Arm Hydraulic Assembly . . . 27
Left Hand Hydraulic Lift Cylinder Assembly No. 117-1831 . . . 29
Right Hand Hydraulic Lift Cylinder Assembly No. 117-1832 . . . 30
Hydraulic Cylinder Assembly No. 117-1833 . . . 31
Quick Attach Assembly . . . 32
Electrical System Assembly . . . 33
Grill Assembly . . . 35
Hood Assembly . . . 36
Rear Access Cover Assembly . . . 37
Crankcase Assembly . . . 38
Oil Pan and Oil Pump Assembly . . . 39
Cylinder Head Assembly . . . 40
Gear Case and Oil Filter Cartridge Assembly . . . 41
Cylinder Head Cover Assembly . . . 42
Dipstick and Guide Assembly . . . 43
Main Bearing Case Assembly . . . 44
Camshaft and Idle Gear Shaft Assembly . . . 45
Piston and Crankshaft Assembly . . . 46
Fuel Camshaft Assembly . . . 47
Idle Apparatus and Fuel Pump Cover Assembly . . . 48
Stop Solenoid and Speed Control Plate Assembly . . . 49
Injection Pump Assembly . . . 50
Governor Assembly . . . 51
Valve and Rocker Arm Assembly . . . 52
Nozzle Holder and Glow Plug Assembly . . . 53
Nozzle Holder Assembly . . . 54
Alternator, Pulley and Fan Assembly . . . 56
Alternator Components Assembly . . . 57
Starter and Flywheel Assembly . . . 58
Starter Component Assembly . . . 59
Water Flange and Thermostat Assembly . . . 60
Water Pump and Water Pipe Assembly . . . 61
Inlet and Exhaust Manifold Assembly . . . 62
Miscellaneous Engine Parts . . . 63
Upper Engine Gasket Kit . . . 64
Lower Engine Gasket Kit . . . 65
Attachments and Accessories . . . 66

**© 2014—The Toro® Company**
**8111 Lyndale Avenue South**
**Bloomington, MN 55420**



**Contact us at www.Toro.com.**
**Printed in the USA.**
**All Rights Reserved**

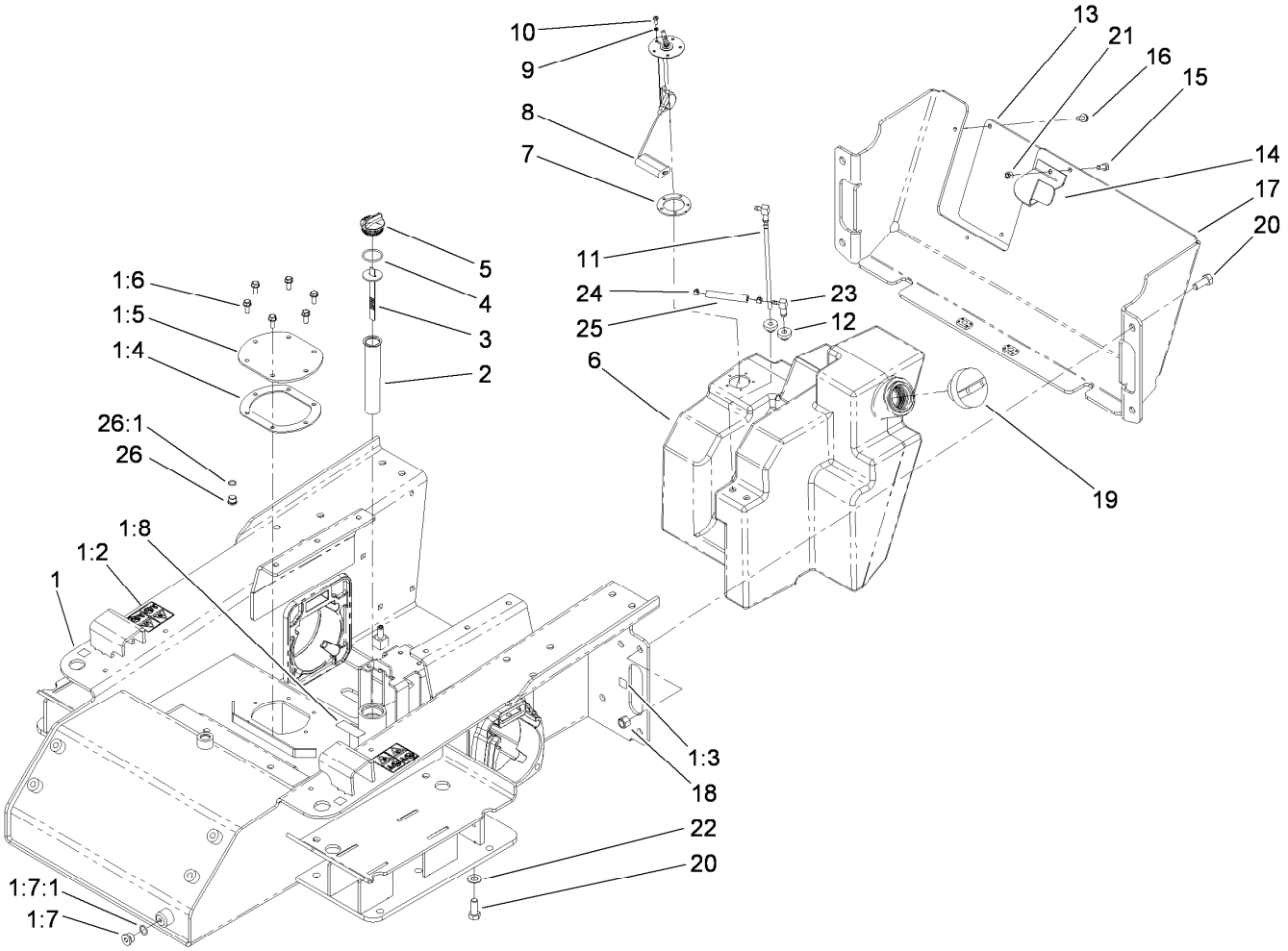


# Main Frame and Fuel Tank Assembly

| Ref. | Part Number | Qty. | Description |
|---|---|---|---|
| 1 | 115-4834 | 1 | Chassis ASM |
| 1:2 | 100-4650 | 2 | Decal-Warning |
| 1:3 | 93-9084 | 4 | Decal-Point, Lift |
| 1:4 | 107-3557 | 1 | Gasket-Cover, Access |
| 1:5 | 108-6297-01 | 1 | Cover-Tank |
| 1:6 | 98-9940 | 6 | Screw |
| 1:7 | 353-988 | 2 | Plug-Hex |
| 1:7:1 | 237-79 | 1 | O-Ring |
| 1:8 | 93-6686 | 1 | Decal-Oil, HYD |
| 2 | 61-2790 | 1 | Filter-Screen |
| 3 | 100-2097 | 1 | Dipstick-Oil |
| 4 | 237-123 | 1 | O-Ring |
| 5 | 93-7498 | 1 | Plug-Plastic |
| 6 | 115-4800 | 1 | Tank-Fuel |
| 7 | 113372 | 1 | Gasket-Sender, Fuel |
| 8 | 100-1298 | 1 | Sender-Fuel |
| 9 | 3253-17 | 5 | Washer-Lock |
| 10 | 3250-31 | 5 | Screw-PPH |

| Ref. | Part Number | Qty. | Description |
|---|---|---|---|
| 11 | 98-0185 | 1 | Stand-Pipe |
| 12 | 46-6560 | 2 | Bushing |
| 13 | 108-6267-01 | 1 | Panel-Rear |
| 14 | 108-6273-01 | 1 | Clamp-Tank, Fuel |
| 15 | 322-3 | 1 | Screw-HH |
| 16 | 32144-11 | 3 | Screw-HWHTF |
| 17 | 114-8911-01 | 1 | Cover-Rear |
| 18 | 3296-23 | 4 | Nut-Lock, NI |
| 19 | 107-2172 | 1 | Cap-Diesel |
| 20 | 325-5 | 6 | Screw-HH |
| 21 | 3296-29 | 1 | Nut-Lock, NI |
| 22 | 3256-26 | 2 | Washer-Flat |
| 23 | 104-5228 | 1 | Fitting-Elbow, 90 DEG |
| 24 | 2412-80 | 2 | Clamp-Hose |
| 25 | 108-6344 | 1 | Hose-Fuel |
| 26 | 353-989 | 1 | Plug-Hex, Hollow |
| 26:1 | 237-42 | 1 | O-Ring |

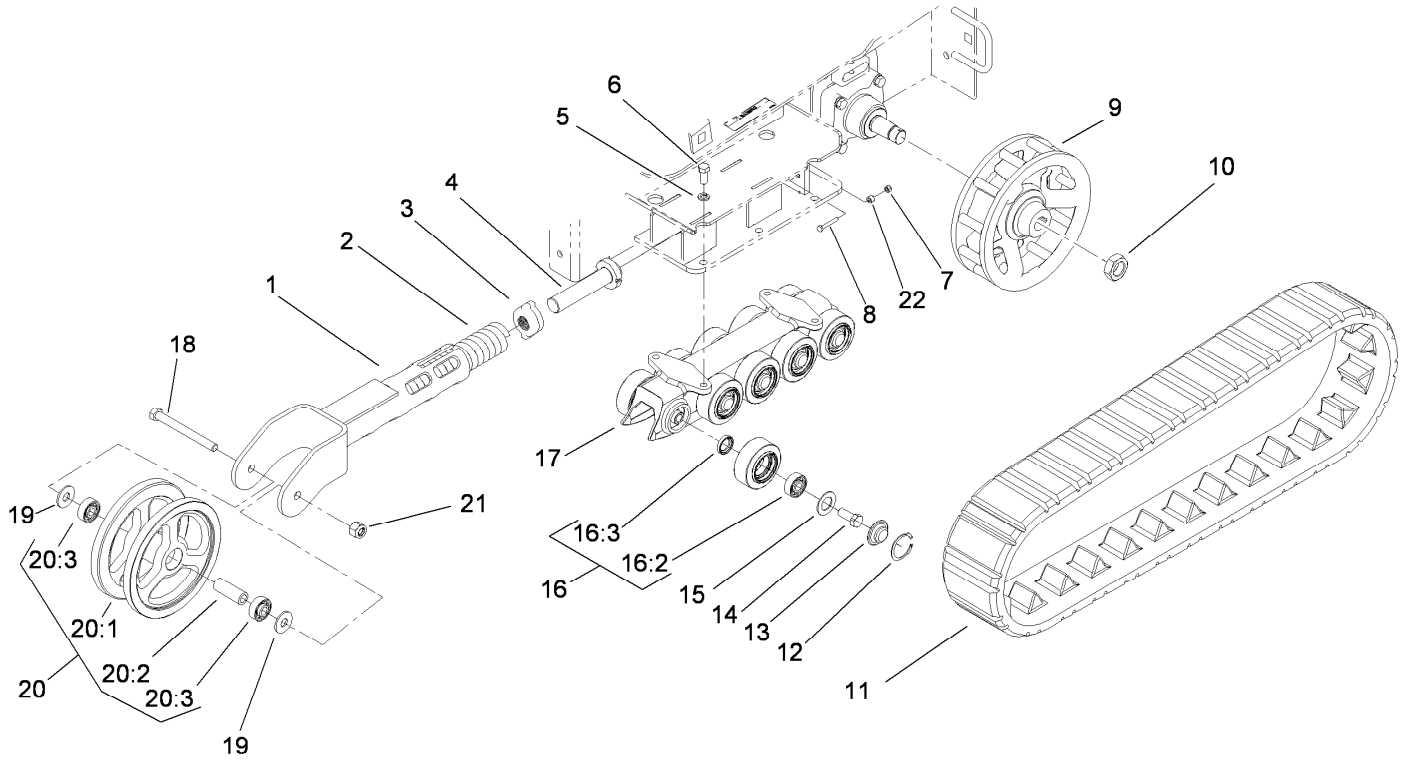


# Track and Traction Assembly

| Ref. | Part Number | Qty. | Description |
|---|---|---|---|
| 1 | 108-4691-03 | 2 | Arm-Tensioner |
| 2 | 95-3624 | 2 | Spring-Compression |
| 3 | 108-4664 | 2 | Block-Tensioner |
| 4 | 98-9846 | 2 | Bolt-Tensioner |
| 5 | 3253-7 | 8 | Washer-Lock |
| 6 | 325-5 | 8 | Screw-HH |
| 7 | 32128-32 | 2 | Nut-HHF |
| 8 | 321-37 | 2 | Screw-HH |
| 9 | 108-5643-03 | 2 | Wheel-Drive |
| 10 | 107-9319 | 2 | Nut-Hex |
| 11 | 98-9800 | 2 | Track |
| 12 | 106-7595 | 20 | Ring-Snap, Internal |
| 13 | 106-7557 | 20 | Cap-Wheel, Bearing |
| 14 | 327-4 | 20 | Screw-HH |
| 15 | 106-7585 | 20 | Gasket-Bogie |
| 16 | 106-7621 | 20 | Road Wheel ASM |
| 16:2 | 120-5378 | 1 | Bearing-Ball |
| 16:3 | 253-118 | 1 | Seal-Oil |
| 17 | 117-1310-03 | 2 | Guide-Track |
| 18 | 327-17 | 2 | Screw-HH |
| 19 | 3256-7 | 4 | Washer-Flat |
| 20 | 104-5745 | 2 | Tensioner Wheel ASM |
| 20:1 | 104-5747-03 | 1 | Wheel-Tensioner |
| 20:2 | 98-9835 | 1 | Spacer-Wheel, Tensioner |
| 20:3 | 120-5378 | 2 | Bearing-Ball |
| 21 | 3296-24 | 2 | Nut-Lock, NI |
| 22 | 98-4799 | 2 | Spacer |

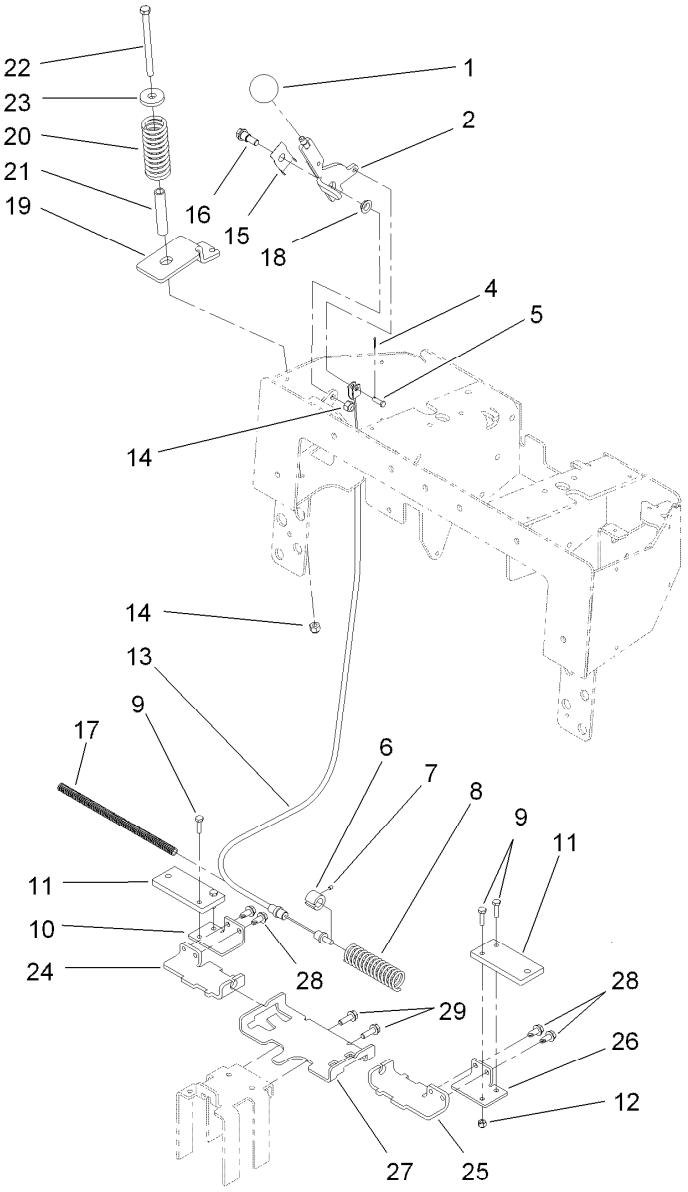


# Parking Brake Assembly

| Ref. | Part Number | Qty. | Description |
|---|---|---|---|
| 1 | 233-21 | 1 | Knob |
| 2 | 112-2694-03 | 1 | Handle-Brake |
| 4 | 3272-1 | 1 | Pin-Cotter |
| 5 | 283-67 | 1 | Pin-Clevis |
| 6 | 100-6274 | 2 | Tube-Guide |
| 7 | 3245-20 | 2 | Screw-HSH |
| 8 | 100-1678 | 1 | Spring |
| 9 | 321-6 | 4 | Screw-HH |
| 10 | 112-2789-03 | 1 | Bar-Link, Brake RH |
| 11 | 112-2735-03 | 2 | Plate-Brake |
| 12 | 3296-42 | 4 | Nut-Lock, NI |
| 13 | 112-2791 | 1 | Cable-Brake |
| 14 | 3296-39 | 2 | Nut-Lock, NI |
| 15 | 112-2695 | 1 | Spring-Leaf |
| 16 | 94-6177 | 1 | Bolt-Shoulder |

| Ref. | Part Number | Qty. | Description |
|---|---|---|---|
| 17 | 100-4697 | 1 | Tube-Convoluted |
| 18 | 93-2368 | 1 | Bushing-Flange |
| 19 | 115-4854-03 | 1 | Bracket-Cable, Spring |
| 20 | 114-1254 | 1 | Spring-Compression |
| 21 | 114-1255 | 1 | Spacer-Spring |
| 22 | 323-39 | 1 | Screw-HH |
| 23 | 98-0691 | 1 | Washer-Hardened |
| 24 | 112-2788-03 | 1 | Bracket-Mounting, Brake RH |
| 25 | 112-2733-03 | 1 | Bracket-Mounting, Brake LH |
| 26 | 112-2734-03 | 1 | Bar-Link, Brake LH |
| 27 | 110-0224-03 | 1 | Support-Bar, Brake |
| 28 | 32104-32 | 4 | Screw-HWH |
| 29 | 3234-11 | 2 | Screw-HHF |

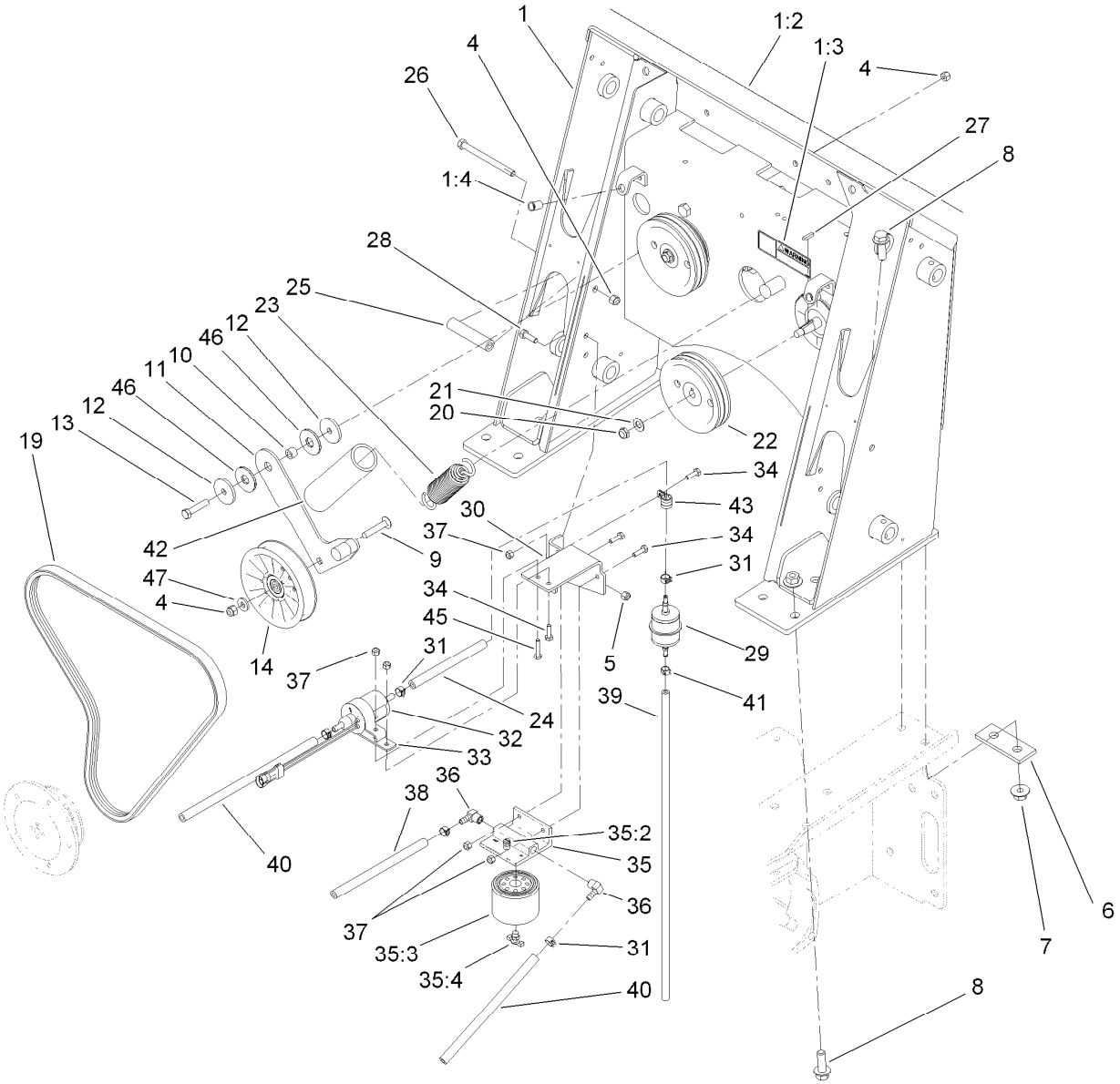


# Loader Tower, Fuel Pump and Drive Assembly

| Ref. | Part Number | Qty. | Description |
|---|---|---|---|
| 1 | 117-9987 | 1 | Loader Tower ASM |
| 1:2 | 117-9905 | 1 | Decal-Panel, Control |
| 1:3 | 93-7814 | 1 | Decal-Danger |
| 1:4 | 32148-8 | 2 | Insert-Threaded |
| 4 | 104-8301 | 4 | Nut-Flange, NI |
| 5 | 3296-29 | 2 | Nut-Lock, NI |
| 6 | 100-6123-03 | 2 | Plate-Stiffener |
| 7 | 32128-52 | 10 | Locknut-Flange |
| 8 | 100-6116 | 10 | Screw-HHF |
| 9 | 117-9971 | 1 | Bolt-Carriage |
| 10 | 115-4986 | 1 | Spacer |
| 11 | 117-9968 | 1 | Idler Arm ASM |
| 12 | 115-1485 | 2 | Washer-Plain |
| 13 | 323-9 | 1 | Screw-HH |
| 14 | 119-2358 | 1 | Pulley-Idler |
| 19 | 108-6262 | 1 | V-Belt |
| 20 | 3296-38 | 2 | Nut-Lock, NI |
| 21 | 3256-25 | 2 | Washer-Flat |
| 22 | 106-5710 | 2 | Pulley-3V |
| 23 | 105-0383 | 1 | Spring-Extension |
| 24 | 108-3280 | 1 | Hose-Fuel |

| Ref. | Part Number | Qty. | Description |
|---|---|---|---|
| 25 | 100-1271 | 2 | Tube-Spacer |
| 26 | 323-23 | 2 | Screw-HH |
| 27 | 3-6168 | 2 | Key |
| 28 | 322-5 | 2 | Screw-HH |
| 29 | 112-7836 | 1 | Filter-Inline |
| 30 | 117-1346-03 | 1 | Bracket-Pump, Fuel |
| 31 | 92-2379 | 6 | Clamp-Hose |
| 32 | 110-8806 | 1 | Pump-Fuel |
| 33 | 110-8817 | 1 | Bracket-Pump, Fuel |
| 34 | 321-5 | 4 | Screw-HH |
| 35 | 109-2678 | 1 | Element, Fuel Filter |
| 35:2 | 63-8290 | 1 | Vent-Air |
| 35:3 | 109-3117 | 1 | Element, Fuel Filter |
| 35:4 | 63-8310 | 1 | Valve-Drain |
| 36 | 353-781 | 2 | Fitting-Elbow |
| 37 | 3296-42 | 5 | Nut-Lock, NI |
| 38 | 110-4124 | 1 | Hose-Fuel |
| 39 | 109-0302 | 1 | Hose-Fuel |
| 40 | 106-1126 | 1 | Hose-Fuel |
| 41 | 2412-98 | 2 | Clamp-Hose |
| 42 | 112-2409 | 1 | Retainer-Spring |

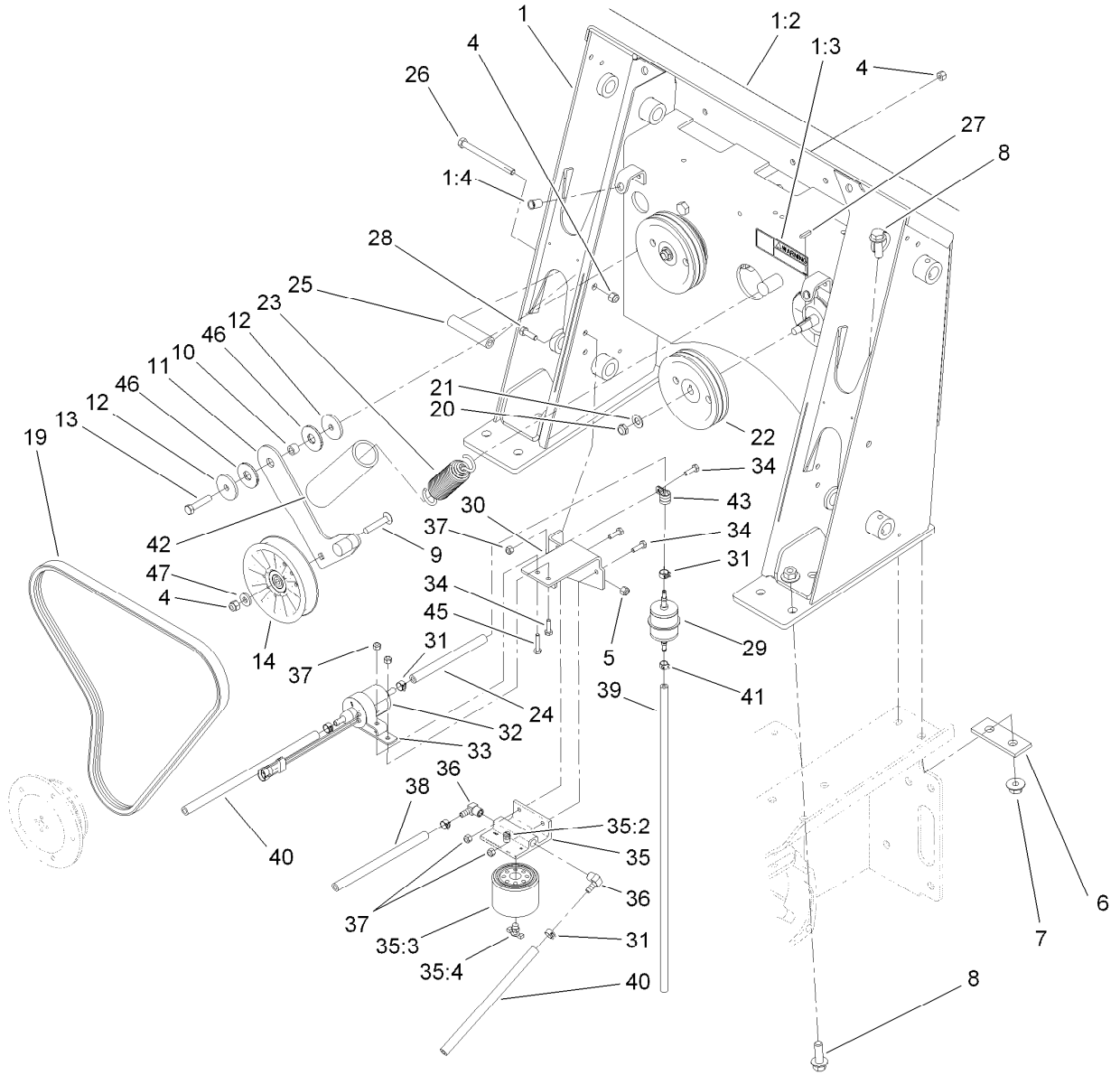


# Loader Tower, Fuel Pump and Drive Assembly (continued)

| Ref. | Part Number | Qty. | Description |
|---|---|---|---|
| 43 | 2412-134 | 1 | Clamp-R |
| 45 | 321-8 | 1 | Screw-HH |
| 46 | 114-0463 | 2 | Washer-Friction, Composite |
| 47 | 43-0940 | 1 | Spacer |

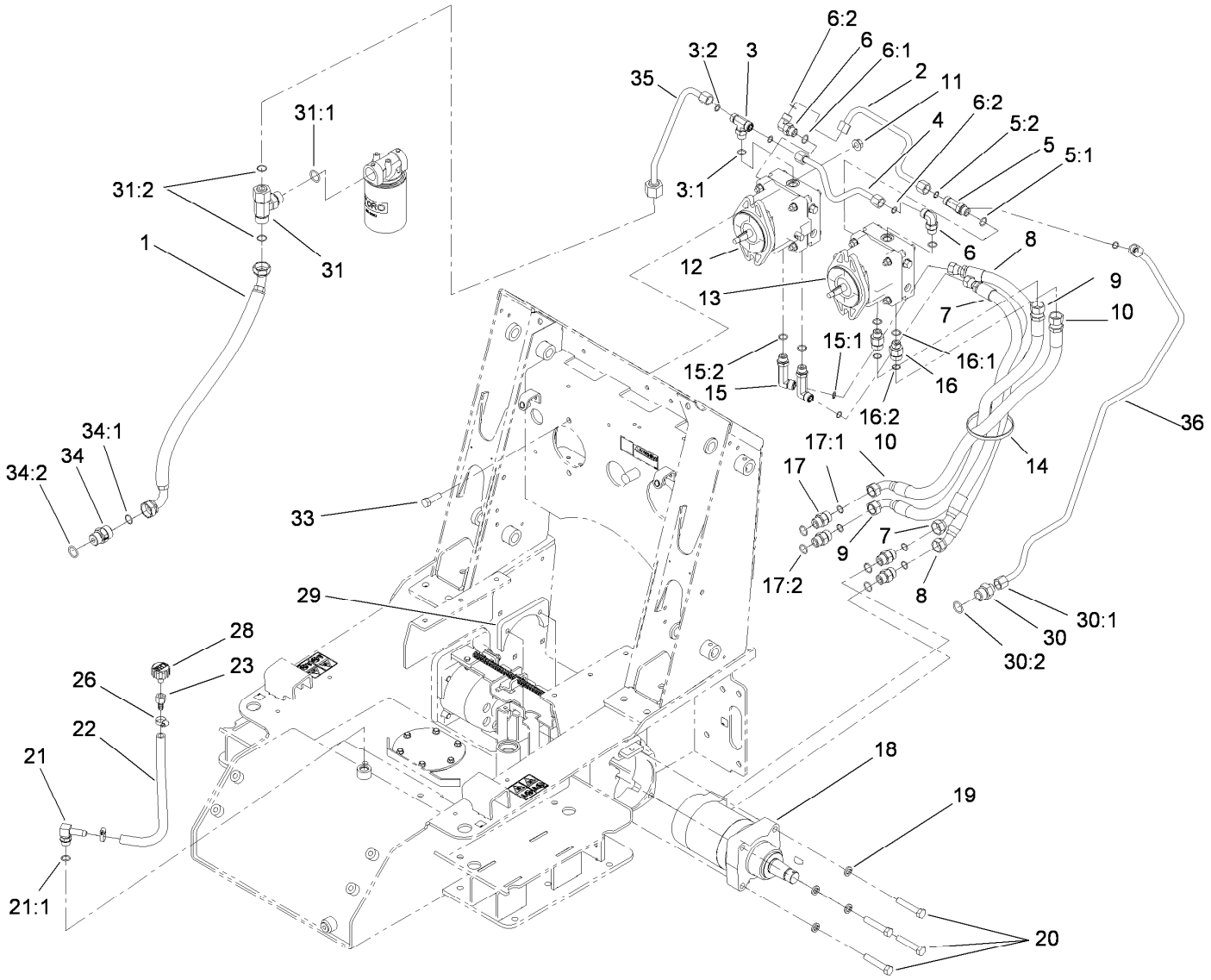


# Traction Hydraulic Assembly

| Ref. | Part Number | Qty. | Description |
|---|---|---|---|
| 1 | 112-2562 | 1 | HYD Hose ASM |
| 2 | 98-0200 | 1 | HYD Tube ASM |
| 3 | 340-157 | 1 | Fitting-HYD, Tee |
| 3:1 | 237-79 | 1 | O-Ring |
| 3:2 | 237-30 | 2 | O-Ring |
| 4 | 106-9330 | 1 | HYD Tube ASM |
| 5 | 340-109 | 1 | Fitting-HYD, Tee |
| 5:1 | 237-79 | 1 | O-Ring |
| 5:2 | 237-30 | 2 | O-Ring |
| 6 | 340-98 | 2 | Fitting-HYD, 90 DEG |
| 6:1 | 237-79 | 1 | O-Ring |
| 6:2 | 237-30 | 1 | O-Ring |
| 7 | 107-3631 | 1 | HYD Hose ASM |
| 8 | 107-3632 | 1 | HYD Hose ASM |
| 9 | 115-4827 | 1 | HYD Hose ASM |
| 10 | 115-4826 | 1 | HYD Hose ASM |
| 11 | 32128-52 | 4 | Locknut-Flange |
| 12 | 106-9590 | 1 | Pump-HYD, RH |
| 13 | 106-9591 | 1 | Pump-HYD, LH |
| 14 | 3334-945 | 1 | Tie-Cable |
| 15 | 99-6160 | 2 | Fitting-Elbow, 90 DEG |

| Ref. | Part Number | Qty. | Description |
|---|---|---|---|
| 15:1 | 237-30 | 1 | O-Ring |
| 15:2 | 237-79 | 1 | O-Ring |
| 16 | 340-155 | 2 | Fitting-HYD, Straight |
| 16:1 | 237-79 | 1 | O-Ring |
| 16:2 | 237-151 | 1 | O-Ring |
| 17 | 340-7 | 4 | Adapter |
| 17:1 | 237-65 | 1 | O-Ring |
| 17:2 | 237-80 | 1 | O-Ring |
| 18 | 106-7654 | 2 | HYD Motor ASM |
| 19 | 3253-7 | 8 | Washer-Lock |
| 20 | 115-4845 | 8 | Screw-HH, TAP |
| 21 | 354-134 | 1 | Fitting-HYD, 90 DEG |
| 21:1 | 237-79 | 1 | O-Ring |
| 22 | 114-8599 | 1 | Hose-Drain, Engine Oil |
| 23 | 354-94 | 1 | Fitting-Female, Barbed |
| 26 | 2412-36 | 2 | Clamp-Hose |
| 28 | 68-6150 | 1 | Breather |
| 29 | 98-2763-03 | 2 | Plate-Mounting |
| 30 | 100-4240 | 1 | Fitting-Adapter |
| 30:1 | 237-30 | 1 | O-Ring |
| 30:2 | 237-81 | 1 | O-Ring |

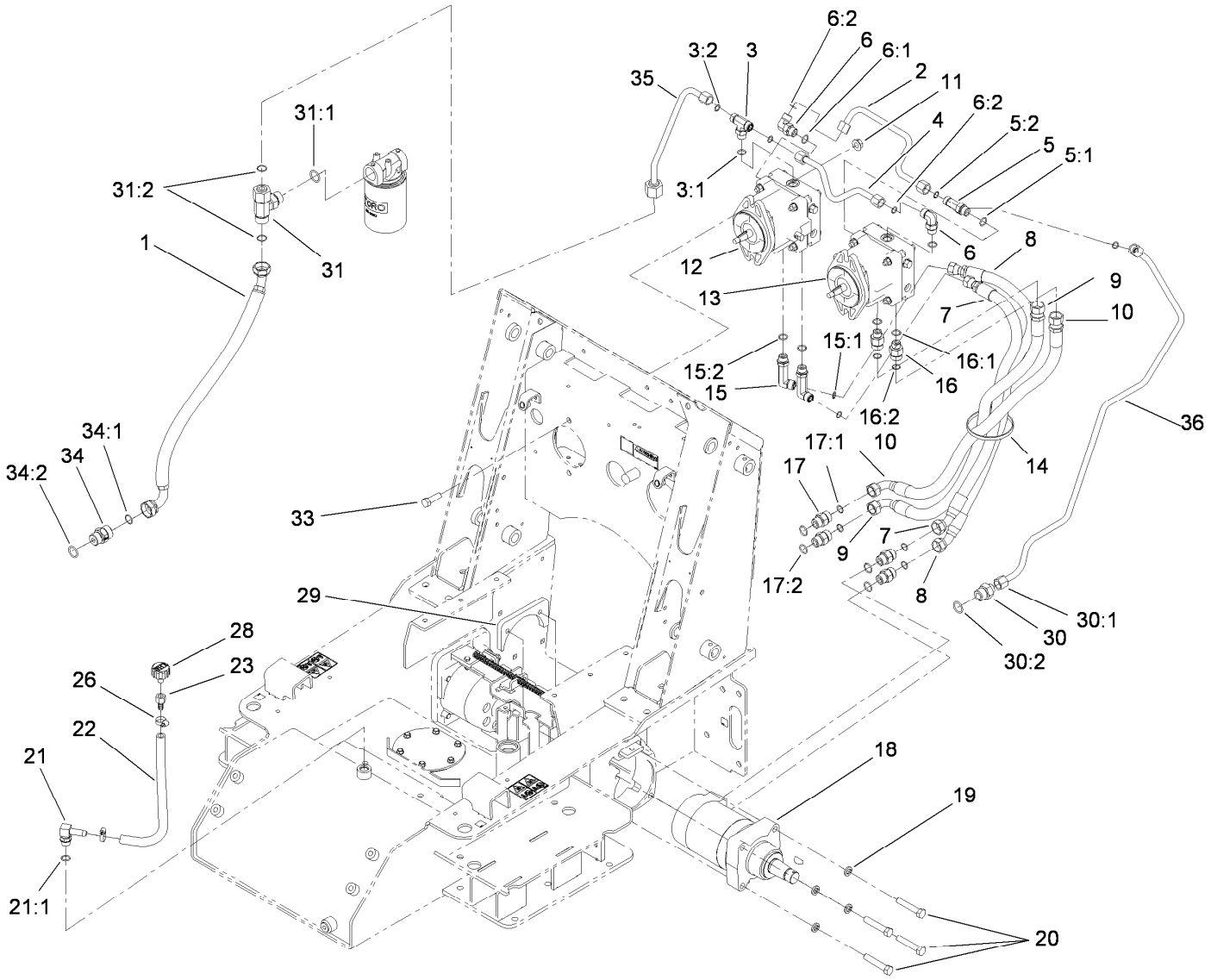


# Traction Hydraulic Assembly (continued)

| Ref. | Part Number | Qty. | Description |
|---|---|---|---|
| 31 | 100-4836 | 1 | Fitting-Tee |
| 31:1 | 237-81 | 1 | O-Ring |
| 31:2 | 237-58 | 2 | O-Ring |
| 33 | 325-6 | 4 | Screw-HH |
| 34 | 108-6306 | 1 | Valve-Check, HYD |
| 34:1 | 237-30 | 1 | O-Ring |
| 34:2 | 237-81 | 1 | O-Ring |
| 35 | 107-3634 | 1 | HYD Tube ASM |
| 36 | 107-3633 | 1 | HYD Tube ASM |

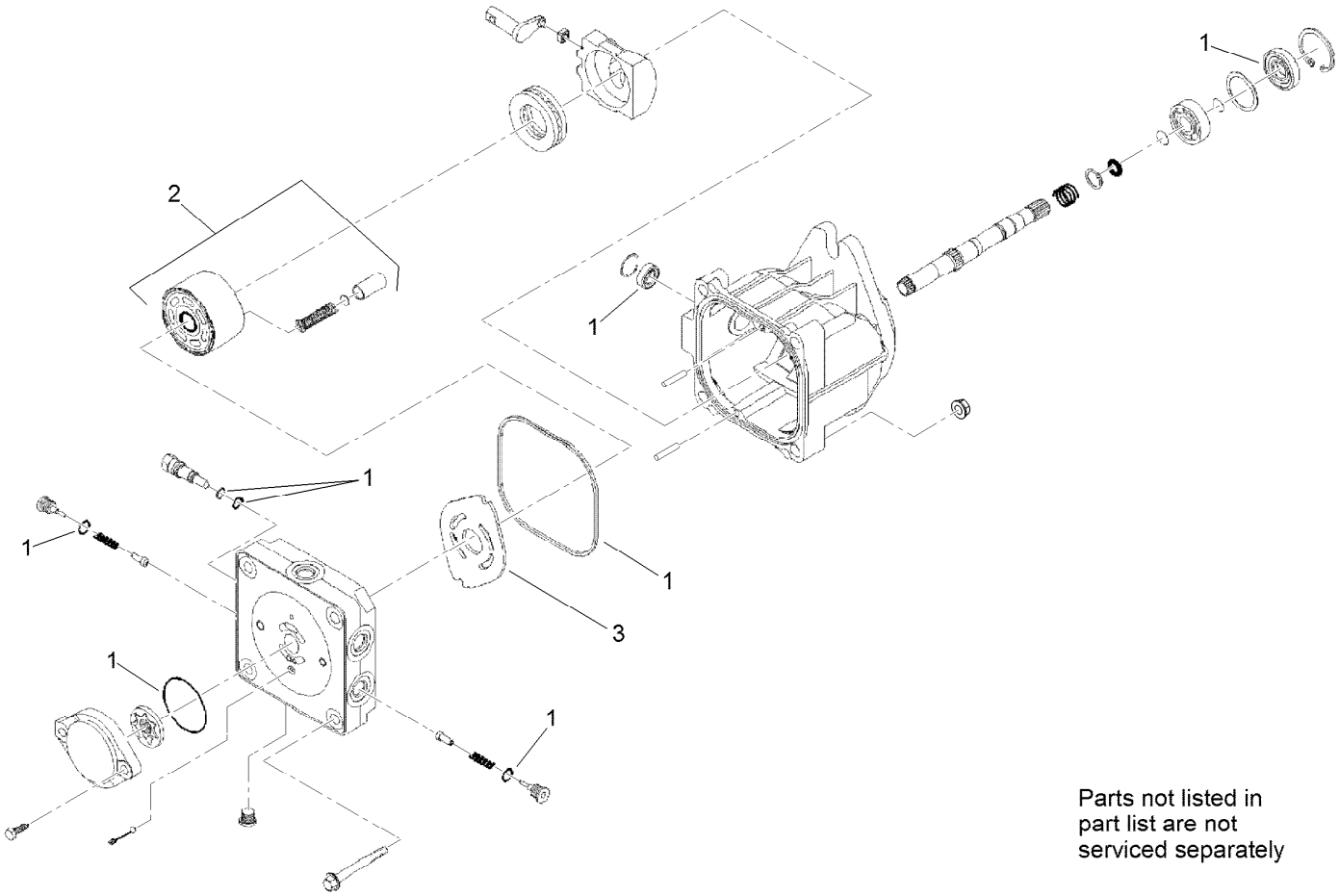


Parts not listed in part list are not serviced separately

# Hydraulic Pump Assembly No. 106-9590 and 106-9591

| *Ref.* | *Part Number* | *Qty.* | *Description* |
|---|---|---|---|
| 1 | 100-6110 | 1 | Overhaul Seal Kit |
| 2 | 94-1913 | 1 | Cylinder Block ASM |
| 3 | 100-6112 | 1 | Plate-Valve |

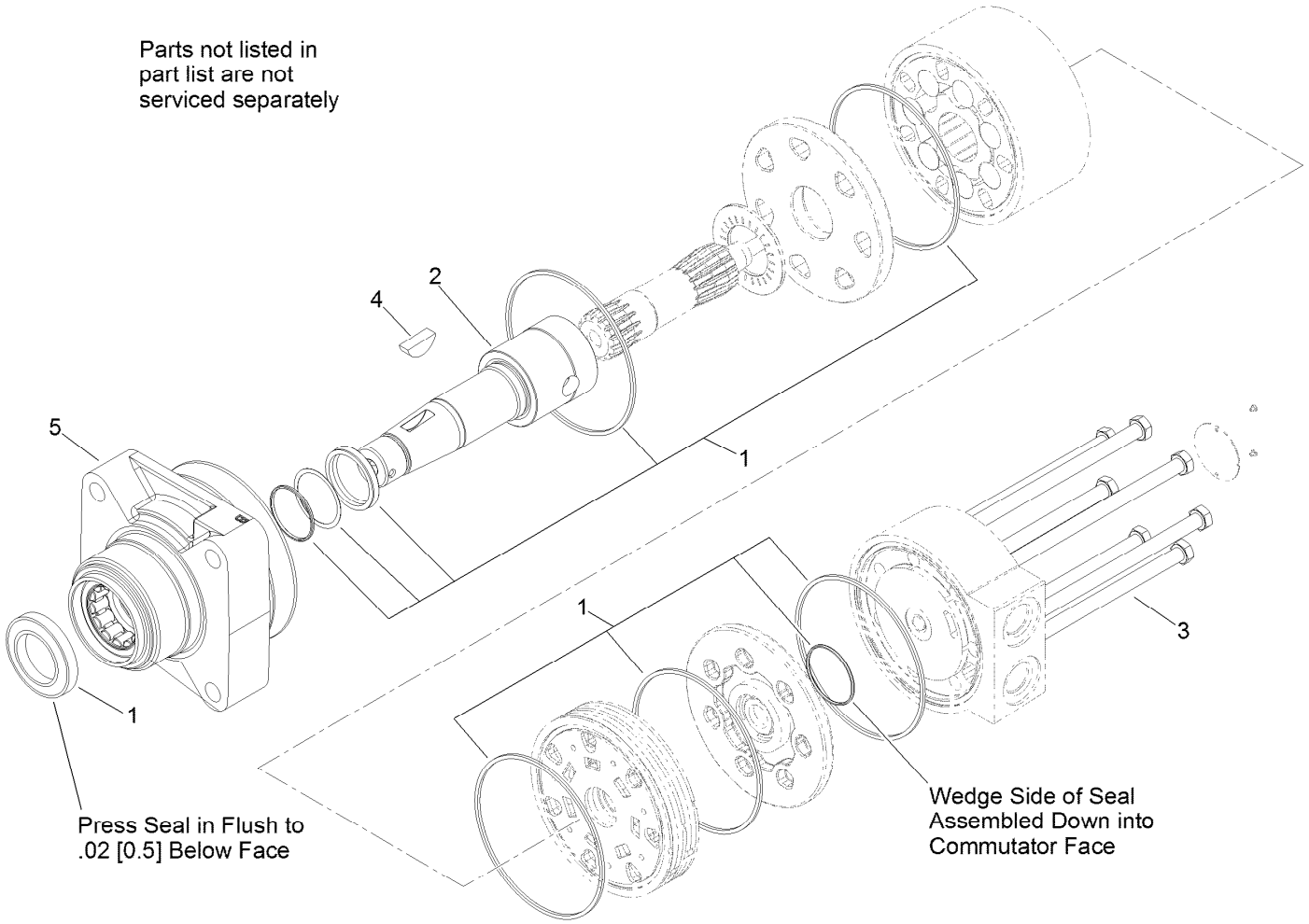


# Hydraulic Motor Assembly No. 106-7654

| *Ref.* | *Part Number* | *Qty.* | *Description* |
|---|---|---|---|
| 1 | 100-6131 | 1 | Seal Kit |
| 2 | 106-7645 | 1 | Coupling-Shaft |
| 3 | 100-4241 | 7 | Screw-HH |
| 4 | 3257-42 | 1 | Key-Woodruff |
| 5 | 108-5634 | 1 | Motor Housing ASM |

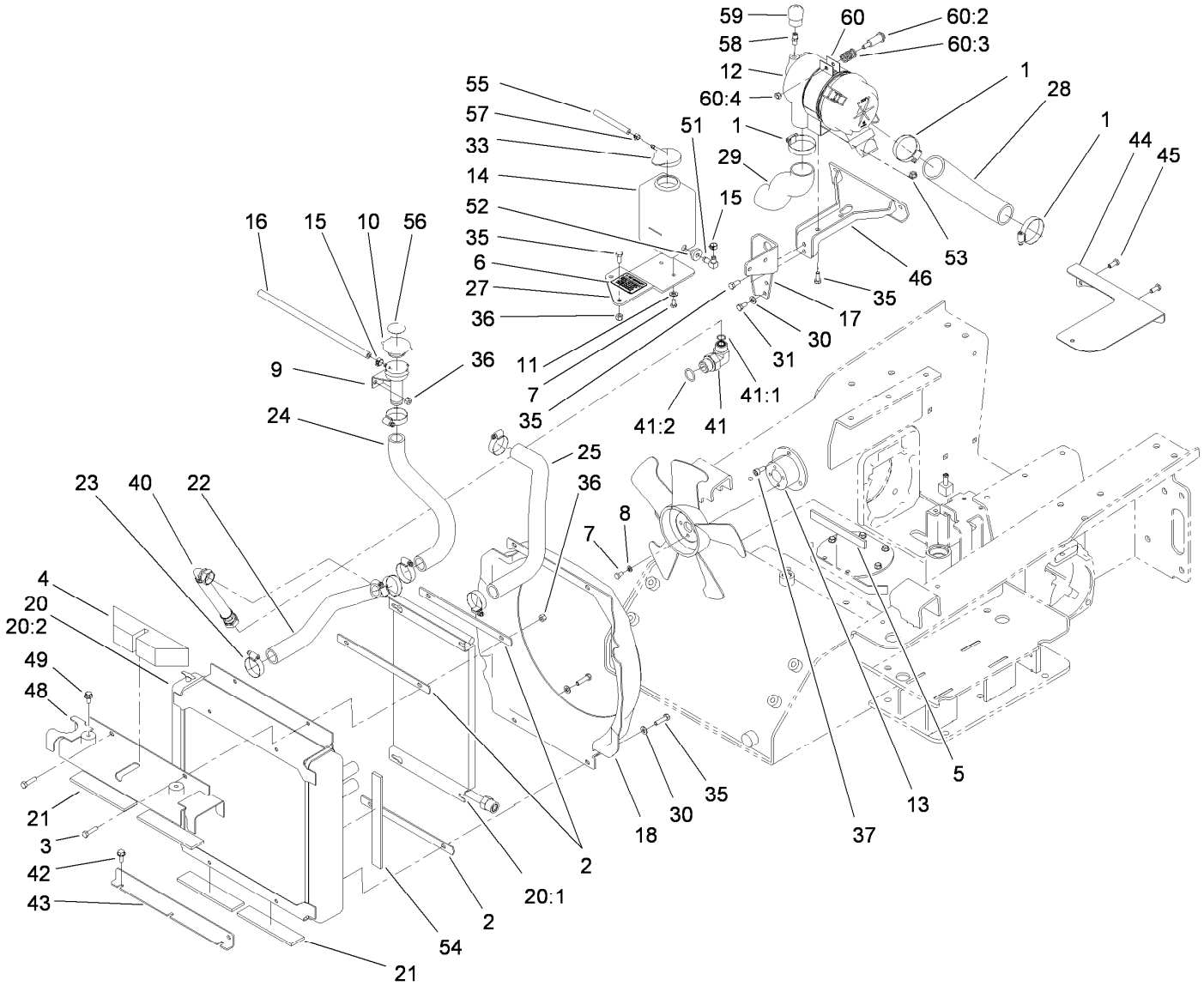


# Radiator and Air Cleaner Assembly

| Ref. | Part Number | Qty. | Description |
|---|---|---|---|
| 1 | 2412-92 | 3 | Clamp-Hose |
| 2 | 108-6395-03 | 3 | Plate-Backing |
| 3 | 322-6 | 4 | Screw-HH |
| 4 | 108-6372 | 1 | Seal-Foam |
| 5 | 112-2466 | 1 | Pad-Rubber |
| 6 | 115-4865 | 1 | Decal-Radiator Fill |
| 7 | 321-2 | 6 | Screw-HH |
| 8 | 3253-3 | 4 | Washer-Lock |
| 9 | 108-6312 | 1 | Tube-Filler, Radiator |
| 10 | 93-5957 | 1 | Cap-Radiator |
| 11 | 3256-22 | 2 | Washer-Flat |
| 12 | 117-9989 | 1 | Air Cleaner ASM |
| 13 | 112-2576-03 | 1 | Spacer-Machined |
| 14 | 1-643163 | 1 | Tank-Overflow |
| 15 | 92-2379 | 2 | Clamp-Hose |
| 16 | 110-4110 | 1 | Hose-Fuel |
| 17 | 107-3645-03 | 1 | Mount-Filter, Air |
| 18 | 108-6347 | 1 | Shroud-Fan |

| Ref. | Part Number | Qty. | Description |
|---|---|---|---|
| 20 | | 1 | Radiator And Oil Cooler ASM ● |
| 20:1 | 106-9597 | 1 | Cooler-Oil, HYD |
| 20:2 | 106-9595 | 1 | Radiator |
| 21 | 112-2401 | 4 | Pad-Rubber |
| 22 | 108-6309 | 1 | Hose-Radiator |
| 23 | 2412-34 | 6 | Clamp-Hose |
| 24 | 108-6310 | 1 | Hose-Radiator |
| 25 | 112-2459 | 1 | Hose-Radiator |
| 27 | 112-2458-03 | 1 | Bracket-Tank, Overflow |
| 28 | 108-6336 | 1 | Hose-Air, Inlet |
| 29 | 112-2431 | 1 | Hose-Air |
| 30 | 3256-23 | 4 | Washer-Flat |
| 31 | 99-5132 | 2 | Bolt |
| 33 | 1-643164 | 1 | Cap-Tank, Overflow |
| 35 | 322-3 | 8 | Screw-HH |
| 36 | 3296-29 | 8 | Nut-Lock, NI |
| 37 | 108-6343 | 3 | Screw |

● Not serviced separately

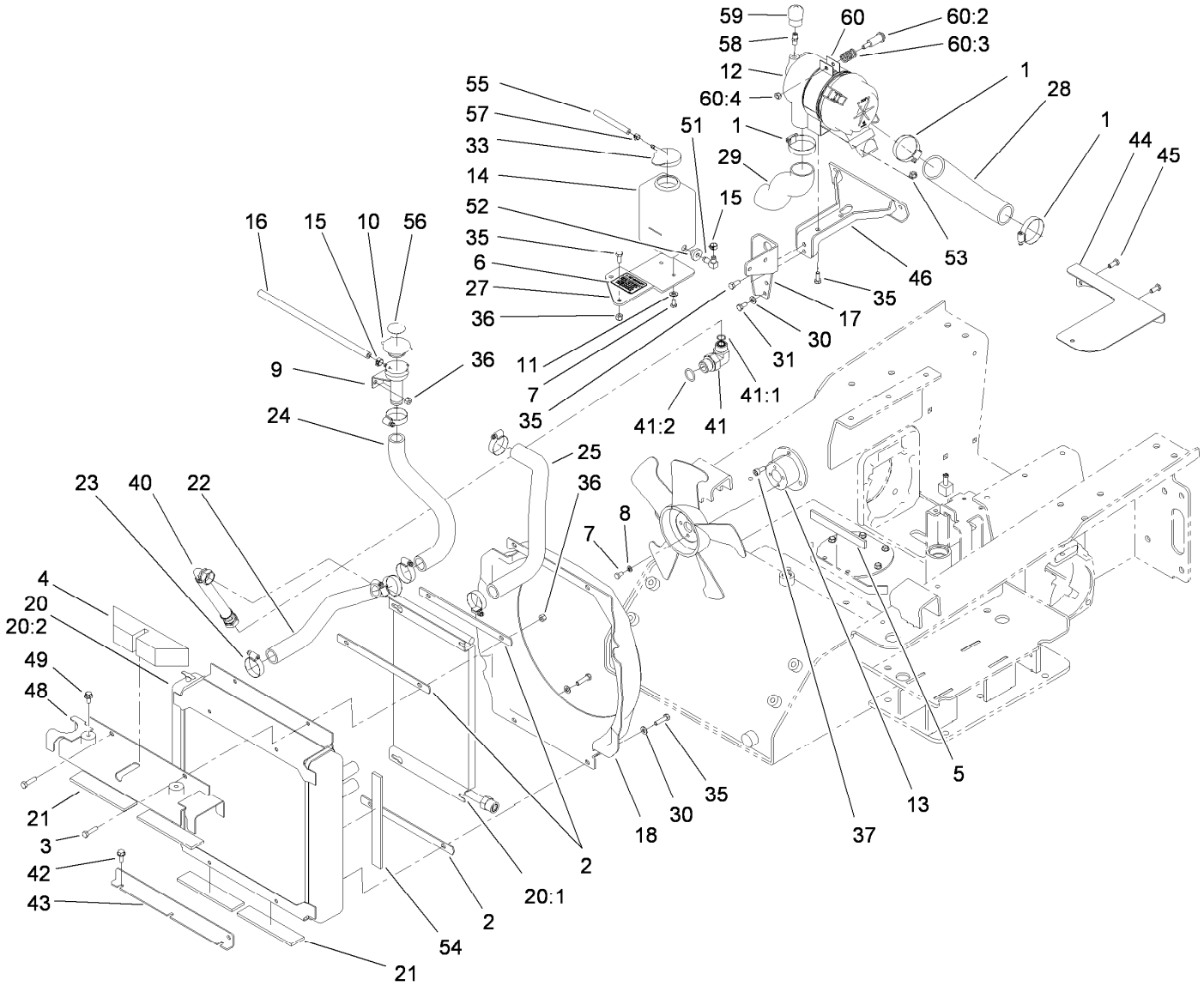


# Radiator and Air Cleaner Assembly (continued)

| Ref. | Part Number | Qty. | Description |
|---|---|---|---|
| 40 | 112-2442 | 1 | HYD Hose ASM |
| 41 | 340-139 | 1 | Fitting-HYD, 90 DEG |
| 41:1 | 237-81 | 1 | O-Ring |
| 41:2 | 237-65 | 1 | O-Ring |
| 42 | 32144-11 | 3 | Screw-HWHTF |
| 43 | 108-6397-03 | 1 | Mount-Radiator |
| 44 | 108-6362 | 1 | Plate-Baffle, Starter |
| 45 | 33114-020 | 2 | Screw-HH |
| 46 | 108-6390-03 | 1 | Bracket ASM |
| 48 | 112-2440-03 | 1 | Bracket-Radiator |
| 49 | 3234-12 | 2 | Screw-HHF |
| 51 | 46-6550 | 1 | Fitting-Elbow, 90 DEG |
| 52 | 46-6560 | 1 | Bushing |

| Ref. | Part Number | Qty. | Description |
|---|---|---|---|
| 53 | 32128-20 | 2 | Nut-HF |
| 54 | 112-2529 | 2 | Foam-Seal |
| 55 | 108-6344 | 1 | Hose-Fuel |
| 56 | 106-6755 | 1 | Decal-Cap, Radiator |
| 57 | 2412-80 | 1 | Clamp-Hose |
| 58 | 105-4292 | 1 | Nipple-Pipe |
| 59 | 93-9164 | 1 | Indicator-Mini |
| 60 | 93-2191 | 1 | Mounting Band ASM (Air Cleaner) |
| 60:2 | 94-3653 | 1 | Bolt |
| 60:3 | 94-3654 | 1 | Spring |
| 60:4 | 48-9510 | 1 | Nut |

● Not serviced separately

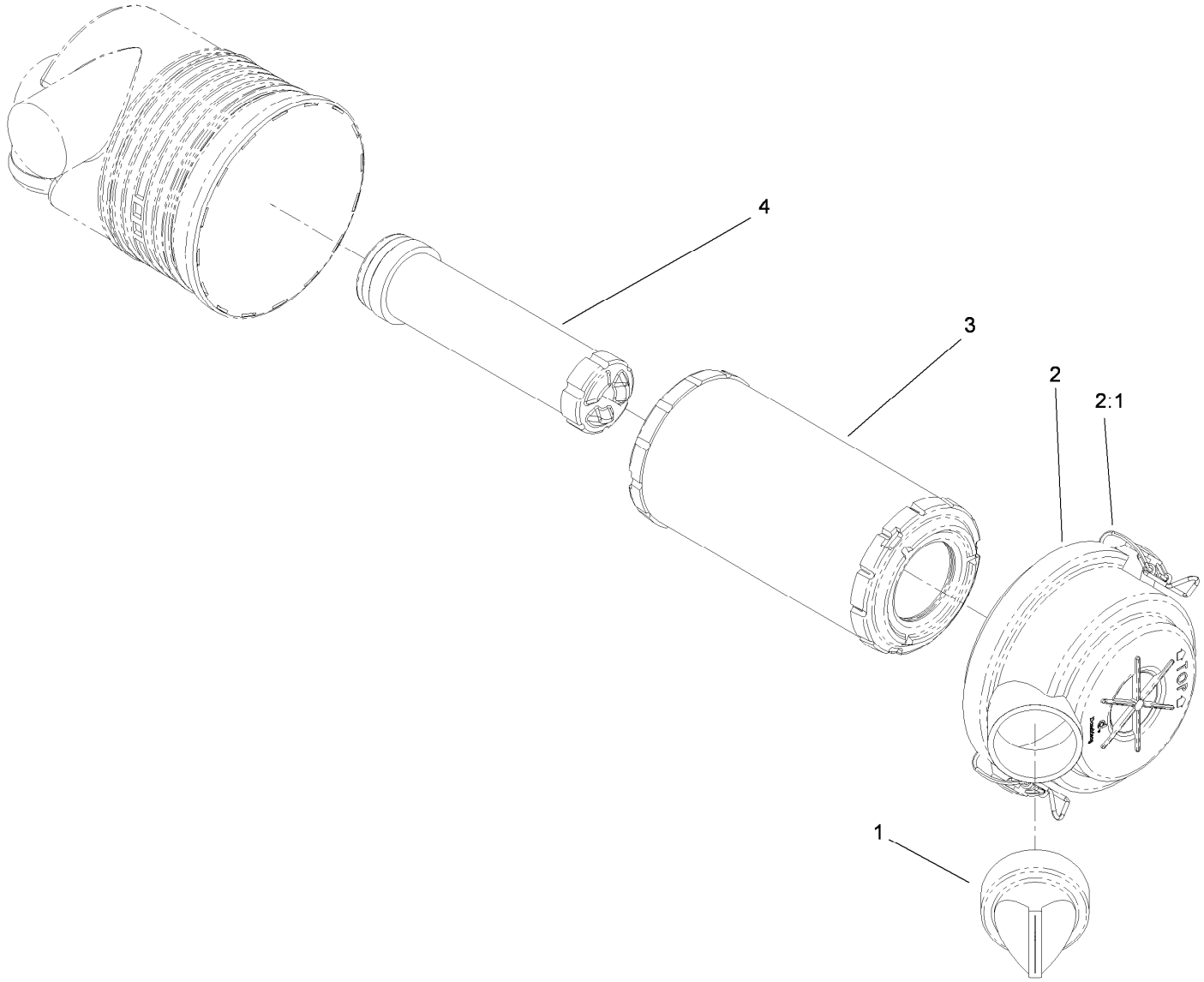


# Air Cleaner Assembly No. 117-9989

| *Ref.* | *Part Number* | *Qty.* | *Description* |
|---|---|---|---|
| 1 | 87-9400 | 1 | Valve-Vacuator |
| 2 | 94-3652 | 1 | Cover ASM |
| 2:1 | 1-643283 | 2 | Latch-Cleaner, Air |
| 3 | 108-3811 | 1 | Filter-Air |
| 4 | 98-2982 | 1 | Filter-Element, Safety |

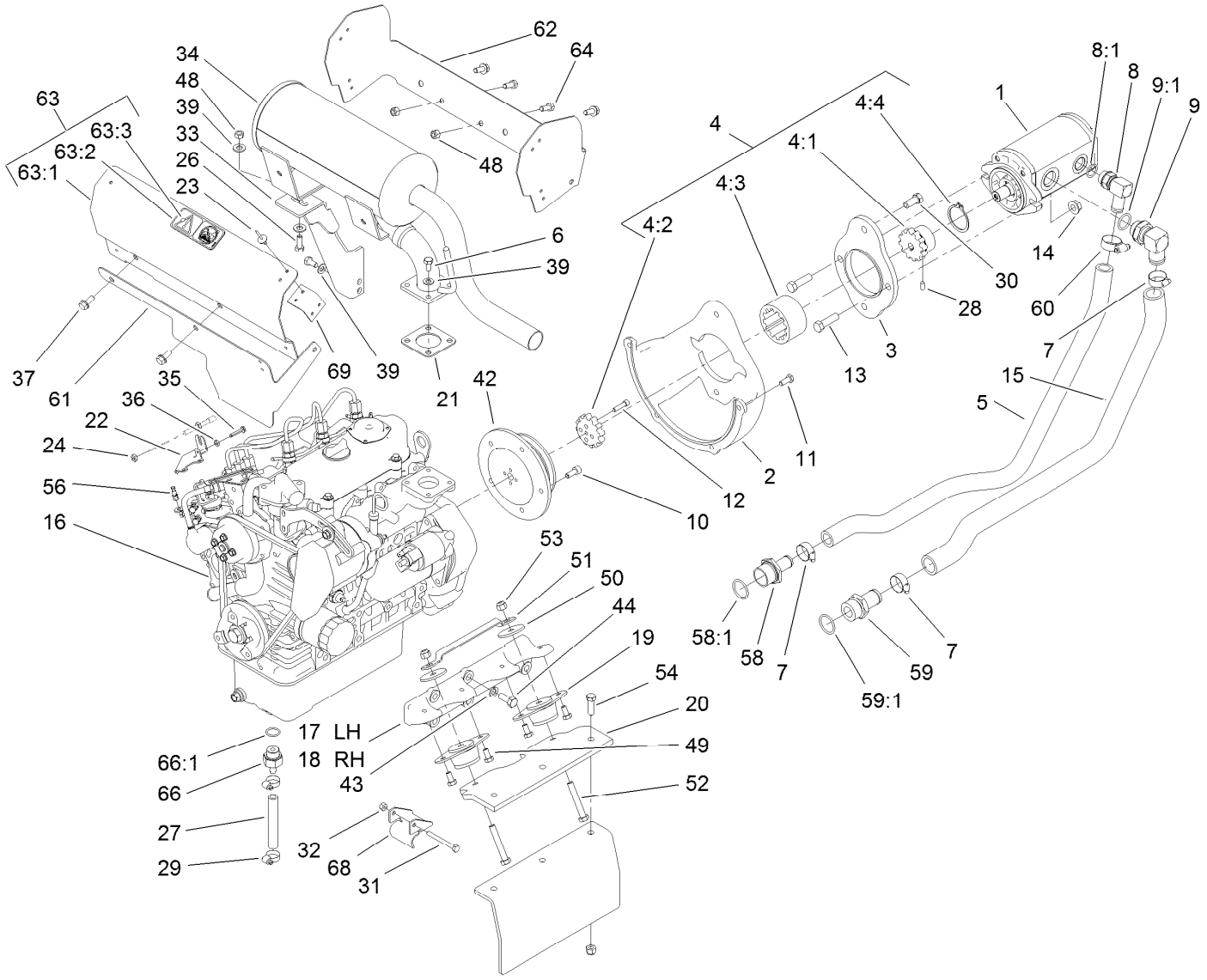


# Hydraulic Pump and Filter Assembly

| Ref. | Part Number | Qty. | Description |
|---|---|---|---|
| 1 | 106-9589 | 1 | Pump-HYD |
| 2 | 108-6235-03 | 1 | Pump-Mount |
| 3 | 108-6211-03 | 1 | Plate-Mount, Pump |
| 4 | 108-6314 | 1 | Coupling ASM |
| 4:1 | 106-9562 | 1 | Hub-Coupling |
| 4:2 | 106-9587 | 1 | Sleeve-Hub |
| 4:3 | 106-9561 | 1 | Sleeve-Coupling |
| 4:4 | 108-6383 | 1 | Ring-Snap, Coupling |
| 5 | 108-6315 | 1 | Hose-Formed, Suction |
| 6 | 99-5132 | 6 | Bolt |
| 7 | 2412-34 | 3 | Clamp-Hose |
| 8 | 87-8170 | 1 | Fitting |
| 8:1 | 237-80 | 1 | O-Ring |
| 9 | 100-4202 | 1 | Fitting-HYD, 90 DEG |
| 9:1 | 237-81 | 1 | O-Ring |
| 10 | 108-6343 | 5 | Screw |
| 11 | 33114-020 | 4 | Screw-HH |
| 12 | 3274-26 | 4 | Screw-HSH |
| 13 | 324-6 | 2 | Screw-HH |
| 14 | 32128-42 | 2 | Nut-HF |
| 15 | 108-6316 | 1 | Hose-Formed, Suction |

| Ref. | Part Number | Qty. | Description |
|---|---|---|---|
| 16 | 127-9653 | 1 | Engine-Kubota, D902 |
| 17 | 108-6269-03 | 1 | Mount-Engine, LH |
| 18 | 108-6271-03 | 1 | Mount-Engine, RH |
| 19 | 120-6274 | 4 | Mount-Engine |
| 20 | 107-3617-03 | 2 | Plate-Mount, Engine |
| 21 | 99-8343 | 1 | Gasket-Muffler |
| 22 | 108-5922 | 1 | Bracket-Support, Throttle |
| 23 | 146489 | 16 | Rivet |
| 24 | 3220-1 | 2 | Nut-Jam |
| 26 | 322-4 | 1 | Screw-HH |
| 27 | 114-8599 | 1 | Hose-Drain, Engine Oil |
| 28 | 3245-9 | 1 | Screw-Set, HSH |
| 29 | 2412-36 | 2 | Clamp-Hose |
| 30 | 324-4 | 2 | Screw-HH |
| 31 | 321-18 | 2 | Screw-HH |
| 32 | 32152-4 | 2 | Nut-Lock, Cone |
| 33 | 112-2403-03 | 1 | Support-Muffler |
| 34 | 106-9584 | 1 | Muffler ASM |
| 35 | 117-1701 | 1 | Screw-HWHTF |
| 36 | 3217-26 | 1 | Nut-Hex |
| 37 | 3234-5 | 4 | Screw-HHF |

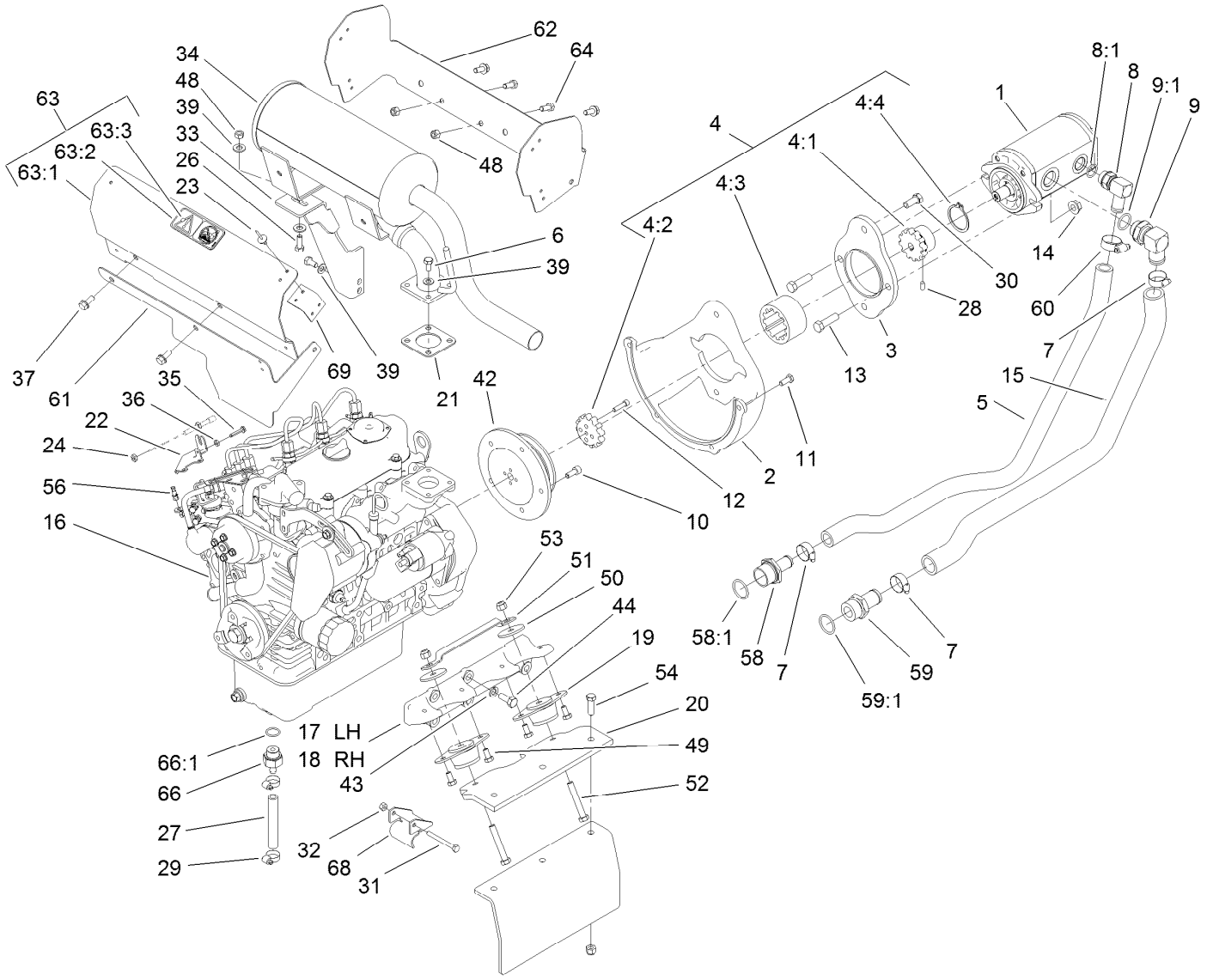


# Hydraulic Pump and Filter Assembly (continued)

| Ref. | Part Number | Qty. | Description |
|---|---|---|---|
| 39 | 3256-23 | 8 | Washer-Flat |
| 42 | 112-2568-03 | 1 | Pulley-Machined |
| 43 | 42-9600 | 10 | Washer-Lock, Spring |
| 44 | 43-0090 | 10 | Screw-HH |
| 48 | 32152-1 | 6 | Nut-Lock, Cone |
| 49 | 322-2 | 8 | Screw-HH |
| 50 | 63-7400 | 4 | Washer-Rebound |
| 51 | 108-6340-03 | 2 | Strap-Rebound |
| 52 | 323-12 | 4 | Screw-HH |
| 53 | 3296-39 | 10 | Nut-Lock, NI |
| 54 | 323-7 | 6 | Screw-HH |
| 56 | 108-5928 | 1 | Swivel-Stop, Cable |
| 58 | 99-6932 | 1 | Fitting-Hose, Barbed |
| 58:1 | 237-117 | 1 | O-Ring |

| Ref. | Part Number | Qty. | Description |
|---|---|---|---|
| 59 | 354-78 | 1 | Connector-Hose |
| 59:1 | 237-146 | 1 | O-Ring |
| 60 | 2412-129 | 1 | Clamp-Hose |
| 61 | 108-6356 | 1 | Plate-Baffle, Lower |
| 62 | 108-6354 | 1 | Plate-Baffle |
| 63 | 112-2564 | 1 | Heat Shield Baffle ASM |
| 63:1 | 108-6355 | 1 | Plate-Baffle, Muffler |
| 63:2 | 115-4882 | 1 | Plate-Hot Surface |
| 63:3 | 3269-31 | 2 | Rivet-Pop |
| 64 | 322-3 | 3 | Screw-HH |
| 66 | 114-8587 | 1 | Fitting-Hose |
| 66:1 | 98-9399 | 1 | Gasket |
| 68 | 112-2533-03 | 2 | Guide-Cable |
| 69 | 112-2449 | 4 | Bracket-Shield |

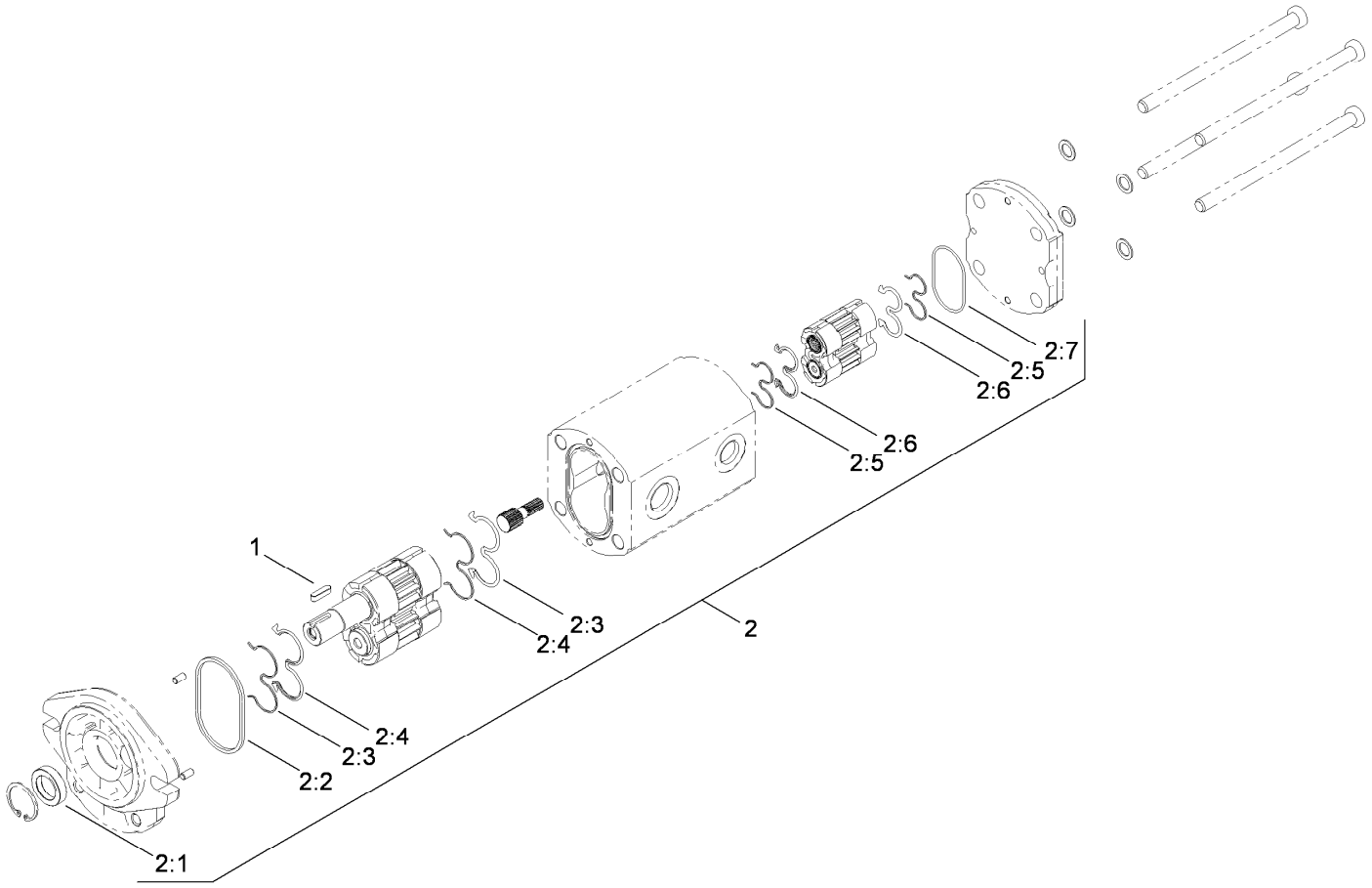


# Hydraulic Pump Assembly No. 106-9589

| *Ref.* | *Part Number* | *Qty.* | *Description* |
|---|---|---|---|
| 1 | 100-4238 | 1 | Key-Square |
| 2 | 107-9316 | 1 | Seal Kit |
| 2:1 | | 1 | Seal-Shaft ● |
| 2:2 | | 1 | Seal-Square ● |
| 2:3 | | 2 | Ring-Backup ● |
| 2:4 | | 2 | Seal-Gear ● |
| 2:5 | | 2 | Ring-Backup ● |
| 2:6 | | 2 | Seal-Gear-Rear ● |
| 2:7 | | 1 | O-Ring ● |

● Not serviced separately

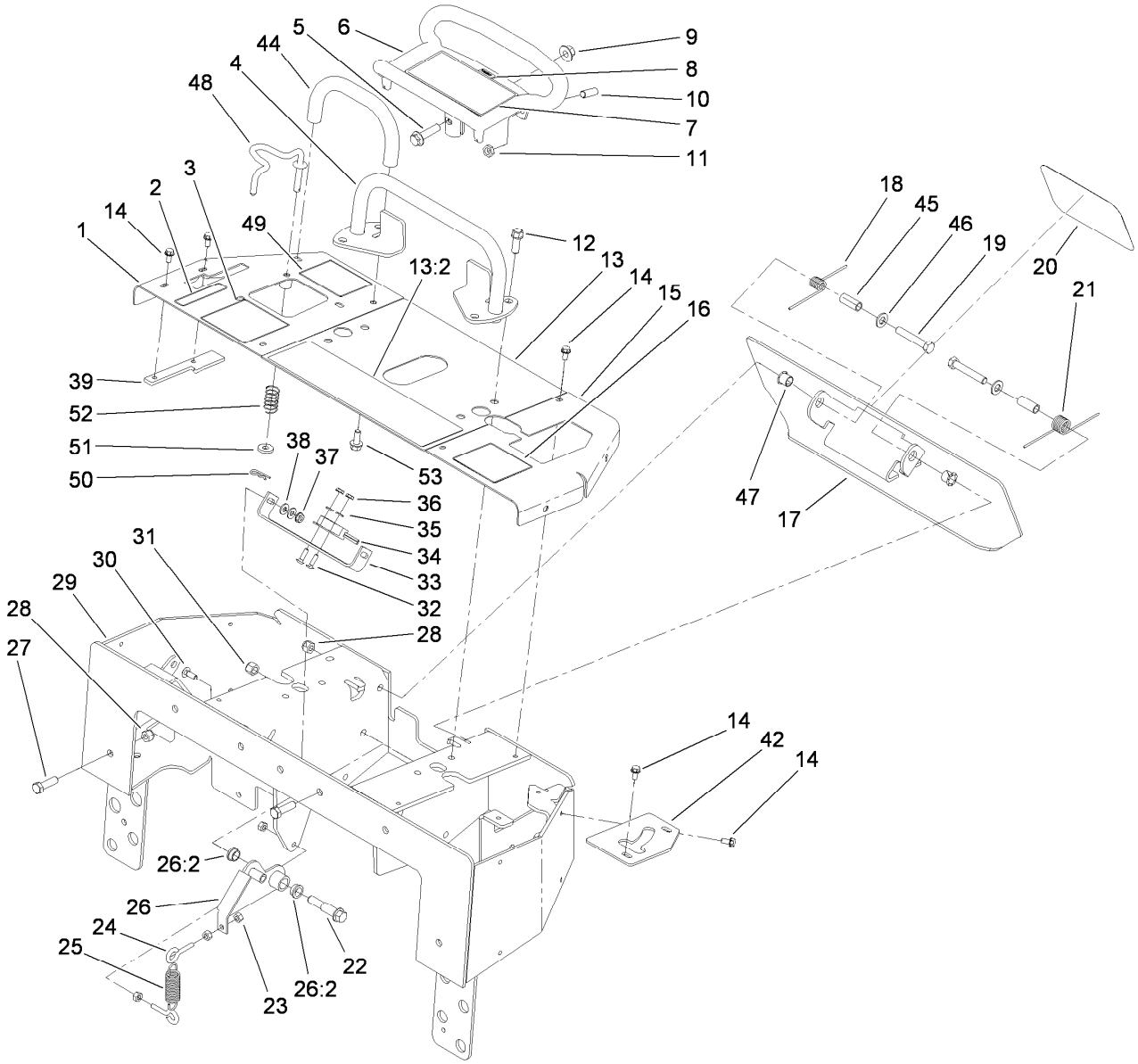


# Control Panel Assembly

| Ref. | Part Number | Qty. | Description |
|---|---|---|---|
| 1 | 115-4836-01 | 1 | Panel-RH |
| 2 | 115-4859 | 1 | Decal-Brake |
| 3 | 115-4857 | 1 | Decal-Control, Loader |
| 4 | 106-7715 | 1 | Bar-Reference |
| 5 | 3234-18 | 1 | Screw-HHF |
| 6 | 120-5380-03 | 1 | Handle-Control |
| 7 | 115-4020 | 1 | Decal-Traction |
| 8 | 98-1459 | 1 | Decal |
| 9 | 32128-43 | 1 | Nut-Flange |
| 10 | 3247-6 | 2 | Screw-Set |
| 11 | 3218-3 | 2 | Nut-Jam |
| 12 | 95-1726 | 4 | Screw-Taptite |
| 13 | 108-4643 | 1 | Center Panel ASM |
| 13:2 | 115-4860 | 1 | Decal-Danger |
| 14 | 9266714 | 11 | Screw-HWH |
| 15 | 112-2737-01 | 1 | Panel-LH |
| 16 | 115-4861 | 1 | Decal-Control, Auxiliary |
| 17 | 112-2786-03 | 1 | Plate-Reverse |
| 18 | 98-8425 | 1 | Spring-Torsion, LH |
| 19 | 323-11 | 2 | Screw-HH |
| 20 | 105-1217 | 1 | Decal |

| Ref. | Part Number | Qty. | Description |
|---|---|---|---|
| 21 | 98-8424 | 1 | Spring-Torsion, RH |
| 22 | 66-0560 | 1 | Bolt-Shoulder |
| 23 | 32128-32 | 4 | Nut-HHF |
| 24 | 71-2870 | 2 | Bolt-Eye |
| 25 | 108-4724 | 1 | Spring-Extension |
| 26 | 100-4203 | 1 | Neutral Centering Lever ASM |
| 26:2 | 256-156 | 2 | Bushing-Flange |
| 27 | 323-7 | 5 | Screw-HH |
| 28 | 3296-39 | 7 | Nut-Lock, NI |
| 29 | 110-0228-01 | 1 | Panel-Control |
| 30 | 3229-1 | 2 | Bolt-CARR |
| 31 | 3296-6 | 1 | Nut-Lock |
| 32 | 3229-20 | 2 | Screw-CARR |
| 33 | 100-1263 | 1 | Plate-Switch |
| 34 | 100-1270 | 1 | Switch-Proximity |
| 35 | 3256-51 | 2 | Washer-Flat |
| 36 | 32149-7 | 2 | Nut-Keps |
| 37 | 32149-2 | 2 | Nut-Keps |
| 38 | 3256-22 | 4 | Washer-Flat |
| 39 | 112-2691-03 | 1 | Plate-Locking, Brake |

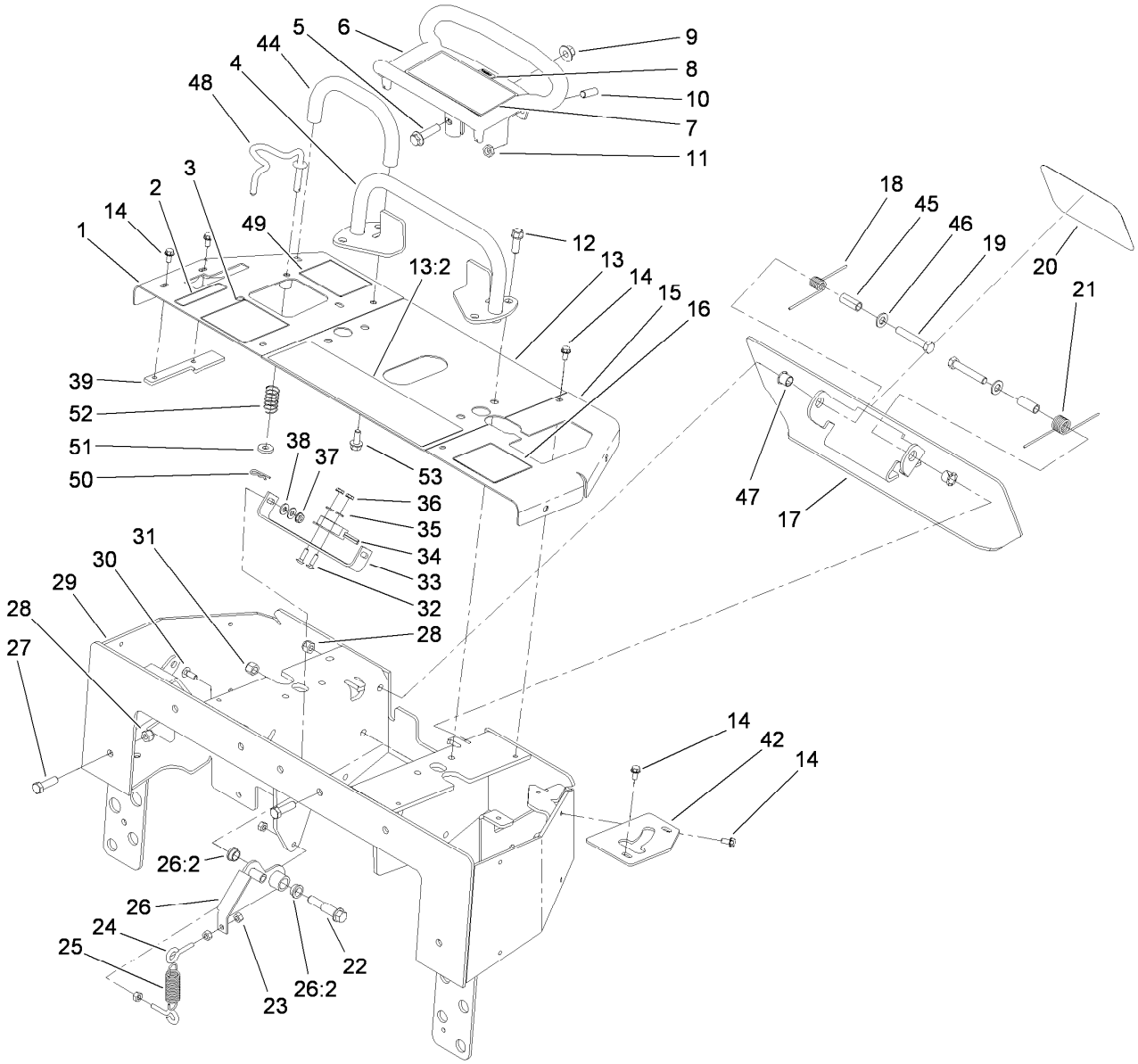


# Control Panel Assembly (continued)

| Ref. | Part Number | Qty. | Description |
|---|---|---|---|
| 42 | 112-2749-01 | 1 | Plate-Stop |
| 44 | 112-2620 | 1 | Bar-Reference |
| 45 | 114-1337 | 2 | Spacer-Spring |
| 46 | 3256-24 | 2 | Washer-Flat |
| 47 | 256-257 | 2 | Bushing-Nyliner |
| 48 | 115-4580 | 1 | Rod-Interlock |

| Ref. | Part Number | Qty. | Description |
|---|---|---|---|
| 49 | 115-4862 | 1 | Decal-Loader Lock |
| 50 | 3290-307 | 1 | Pin-Hair |
| 51 | 88-7200 | 1 | Washer-Flat |
| 52 | 85-6750 | 1 | Spring-Control |
| 53 | 3234-5 | 2 | Screw-HHF |

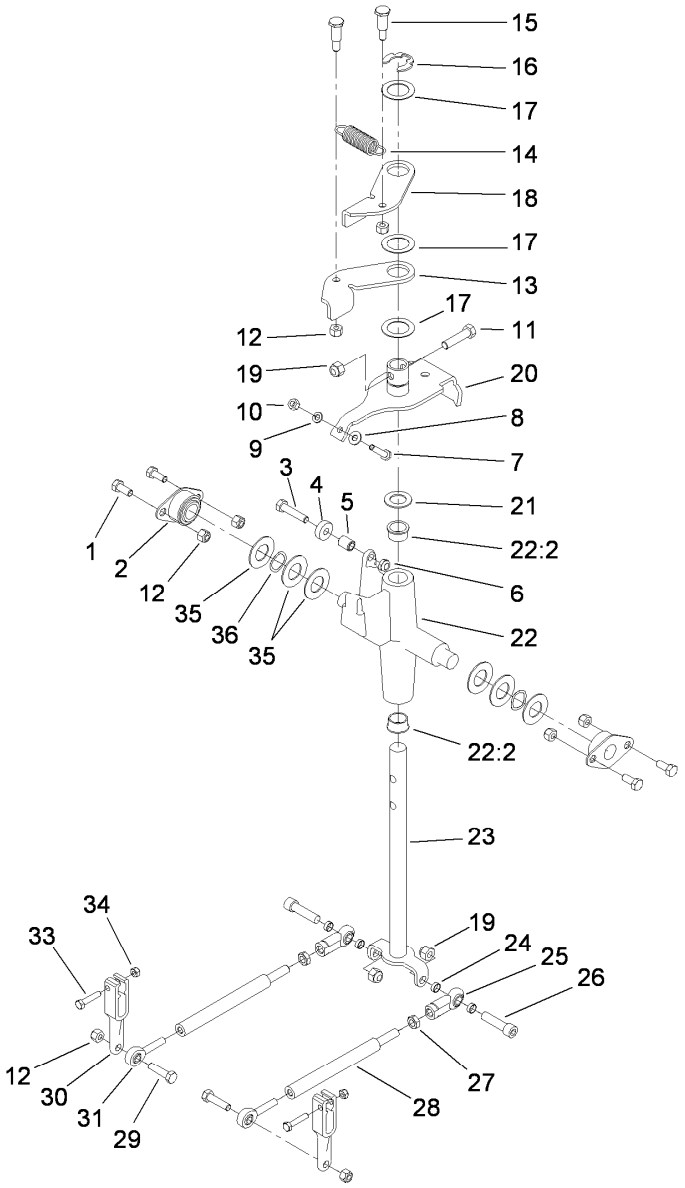


# Traction Control Assembly

| Ref. | Part Number | Qty. | Description |
|---|---|---|---|
| 1 | 322-3 | 4 | Screw-HH |
| 2 | 68-2970 | 2 | Bushing |
| 3 | 322-7 | 1 | Screw-HH |
| 4 | 251-259 | 1 | Bearing-Ball |
| 5 | 88-7450 | 1 | Spacer-Lever, Control |
| 6 | 3296-47 | 1 | Nut-Lock, NI |
| 7 | 114-0282 | 1 | Screw-HH |
| 8 | 3256-22 | 1 | Washer-Flat |
| 9 | 3253-3 | 1 | Washer-Lock |
| 10 | 3217-5 | 1 | Nut-Hex |
| 11 | 323-8 | 1 | Screw-HH |
| 12 | 3296-29 | 8 | Nut-Lock, NI |
| 13 | 98-8407 | 1 | Lever-Return, RH |
| 14 | 108-4724 | 1 | Spring-Extension |
| 15 | 63-2650 | 2 | Screw-Shoulder |
| 16 | 32151-91 | 1 | Ring-Retaining |
| 17 | 108-9743 | 3 | Washer-Plain |
| 18 | 98-8408 | 1 | Lever-Return, LH |

| Ref. | Part Number | Qty. | Description |
|---|---|---|---|
| 19 | 3296-39 | 3 | Nut-Lock, NI |
| 20 | 112-2783 | 1 | Lever-Pivot |
| 21 | 257-8 | 1 | Washer-Thrust |
| 22 | 106-5737 | 1 | Control Support ASM |
| 22:2 | 256-252 | 2 | Bearing-Flange |
| 23 | 117-6335 | 1 | Rod-Drive |
| 24 | 117-9915 | 4 | Spacer |
| 25 | 103-1167 | 2 | Joint-Ball End, LH |
| 26 | 3274-2 | 2 | Screw-HSH |
| 27 | 3220-16 | 2 | Nut-Jam, LH |
| 28 | 117-9900 | 2 | Rod-Linkage |
| 29 | 322-6 | 2 | Screw-HH |
| 30 | 117-3964-03 | 2 | Arm-Control, Pump |
| 31 | 117-9969 | 2 | Bearing-Rod End, RH |
| 33 | 33113-030 | 2 | Screw-HH |
| 34 | 33023-00 | 2 | Nut-Lock |
| 35 | 3256-39 | 2 | Washer-Flat |
| 36 | 95-3703 | 2 | Washer-Spring, Wave |

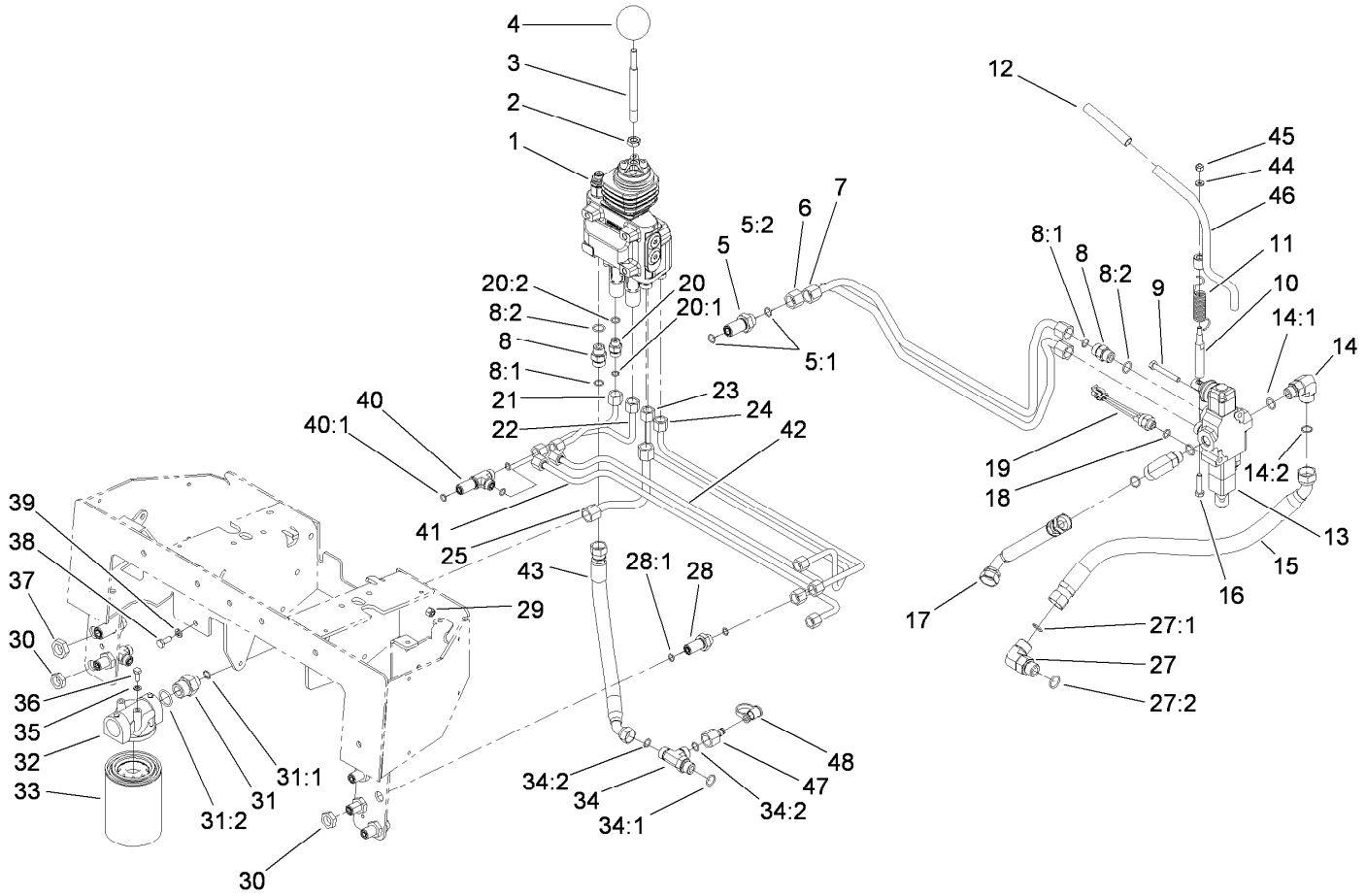


# Principal Hydraulic Assembly

| Ref. | Part Number | Qty. | Description |
|---|---|---|---|
| 1 | 106-9307 | 1 | 2 Spool Valve ASM |
| 2 | 51-2070 | 1 | Nut |
| 3 | 108-4675 | 1 | Shaft-Handle, Loader |
| 4 | 233-21 | 1 | Knob |
| 5 | 340-161 | 2 | Fitting-Bulkhead |
| 5:1 | 237-30 | 2 | O-Ring |
| 5:2 | 340-127 | 1 | Nut-Bulkhead |
| 6 | 106-9310 | 1 | HYD Tube ASM |
| 7 | 106-9311 | 1 | HYD Tube ASM |
| 8 | 340-4 | 4 | Fitting-HYD, Straight |
| 8:1 | 237-30 | 1 | O-Ring |
| 8:2 | 237-79 | 1 | O-Ring |
| 9 | 322-11 | 2 | Screw-HH |
| 10 | 104-2827 | 1 | Spacer-Hiflo |
| 11 | 112-2738 | 1 | Spring-Torsion |
| 12 | 112-2605 | 1 | Grip-Rubber |
| 13 | 104-2831 | 1 | 1 Spool Valve ASM |
| 14 | 340-153 | 2 | Fitting-Elbow, 90 DEG |
| 14:1 | 237-79 | 1 | O-Ring |
| 14:2 | 237-151 | 1 | O-Ring |
| 15 | 112-2561 | 1 | HYD Hose ASM |
| 16 | 48-7740 | 1 | Screw |
| 17 | 112-2443 | 1 | HYD Hose ASM |
| 18 | 237-42 | 1 | O-Ring |
| 19 | 72-4310 | 1 | Switch-Ball |
| 20 | 340-2 | 4 | Fitting-HYD, Straight |
| 20:1 | 237-22 | 1 | O-Ring |

| Ref. | Part Number | Qty. | Description |
|---|---|---|---|
| 20:2 | 237-42 | 1 | O-Ring |
| 21 | 106-9315 | 1 | HYD Tube ASM |
| 22 | 106-9313 | 1 | HYD Tube ASM |
| 23 | 106-9312 | 1 | HYD Tube ASM |
| 24 | 106-9314 | 1 | HYD Tube ASM |
| 25 | 106-9385 | 1 | HYD Tube ASM |
| 27 | 340-17 | 1 | Fitting-HYD, 90 DEG |
| 27:1 | 237-65 | 1 | O-Ring |
| 27:2 | 237-80 | 1 | O-Ring |
| 28 | 340-71 | 4 | Fitting-Straight, Bulkhead |
| 28:1 | 237-22 | 2 | O-Ring |
| 29 | 3296-29 | 2 | Nut-Lock, NI |
| 30 | 340-70 | 6 | Nut-Lock |
| 31 | 100-4240 | 1 | Fitting-Adapter |
| 31:1 | 237-30 | 1 | O-Ring |
| 31:2 | 237-81 | 1 | O-Ring |
| 32 | 92-5821 | 1 | Head-Filter |
| 33 | 86-3010 | 2 | Filter-Oil |
| 34 | 340-109 | 1 | Fitting-HYD, Tee |
| 34:1 | 237-79 | 1 | O-Ring |
| 34:2 | 237-30 | 2 | O-Ring |
| 35 | 3253-3 | 2 | Washer-Lock |
| 36 | 321-4 | 2 | Screw-HH |
| 37 | 340-127 | 2 | Nut-Bulkhead |
| 38 | 322-4 | 3 | Screw-HH |
| 39 | 3253-4 | 3 | Washer-Lock |
| 40 | 340-68 | 2 | Fitting-Tee, Bulkhead |

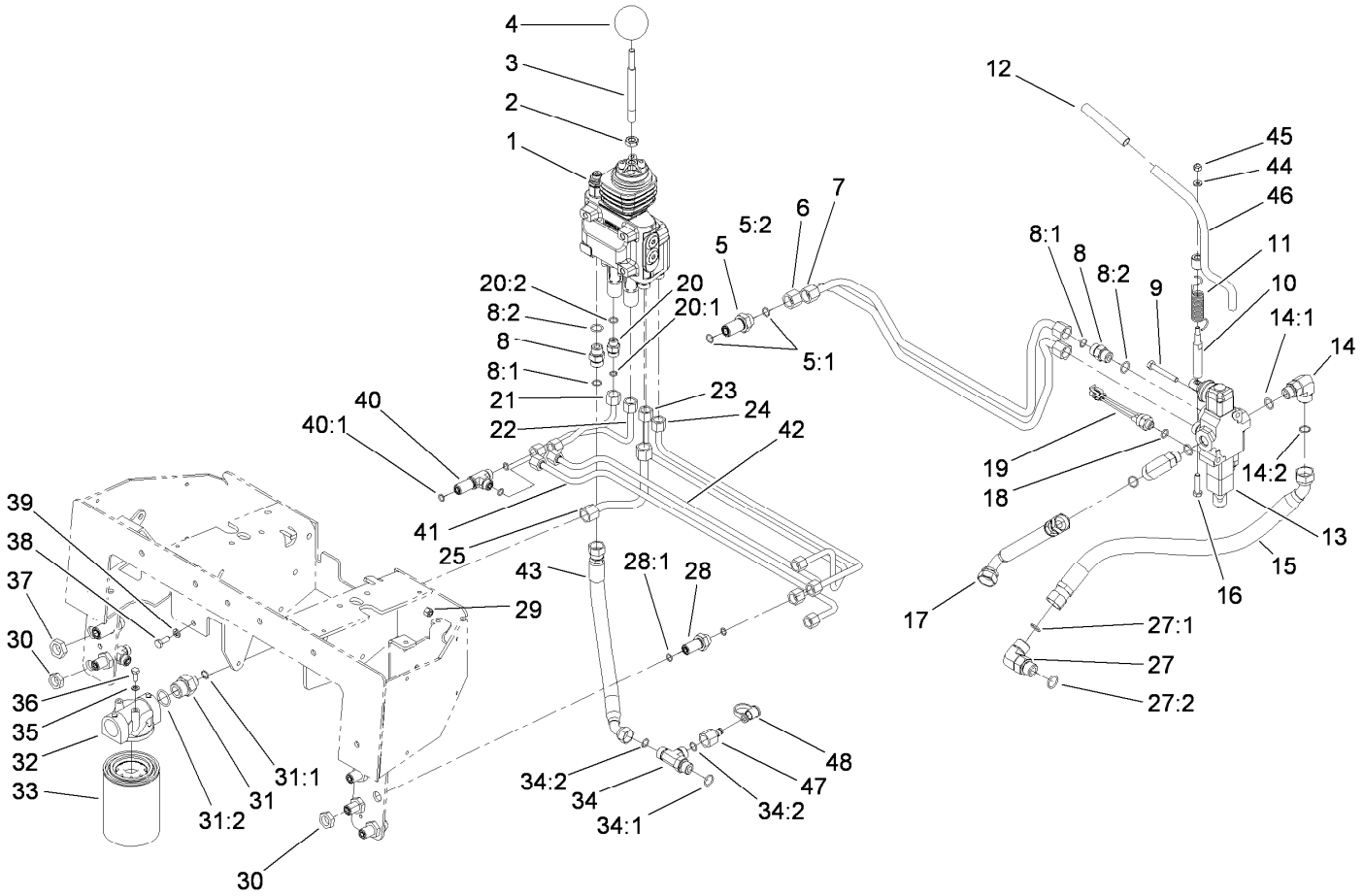


# Principal Hydraulic Assembly (continued)

| Ref. | Part Number | Qty. | Description |
|---|---|---|---|
| 40:1 | 237-22 | 3 | O-Ring |
| 41 | 106-9316 | 1 | HYD Tube ASM |
| 42 | 106-9317 | 1 | HYD Tube ASM |
| 43 | 112-2560 | 1 | HYD Hose ASM |
| 44 | 3256-16 | 1 | Washer-Flat |

| Ref. | Part Number | Qty. | Description |
|---|---|---|---|
| 45 | 3296-42 | 1 | Nut-Lock, NI |
| 46 | 112-2739 | 1 | Lever-Auxiliary |
| 47 | 100-5616 | 1 | Fitting |
| 48 | 354-79 | 1 | Cap-Dust |

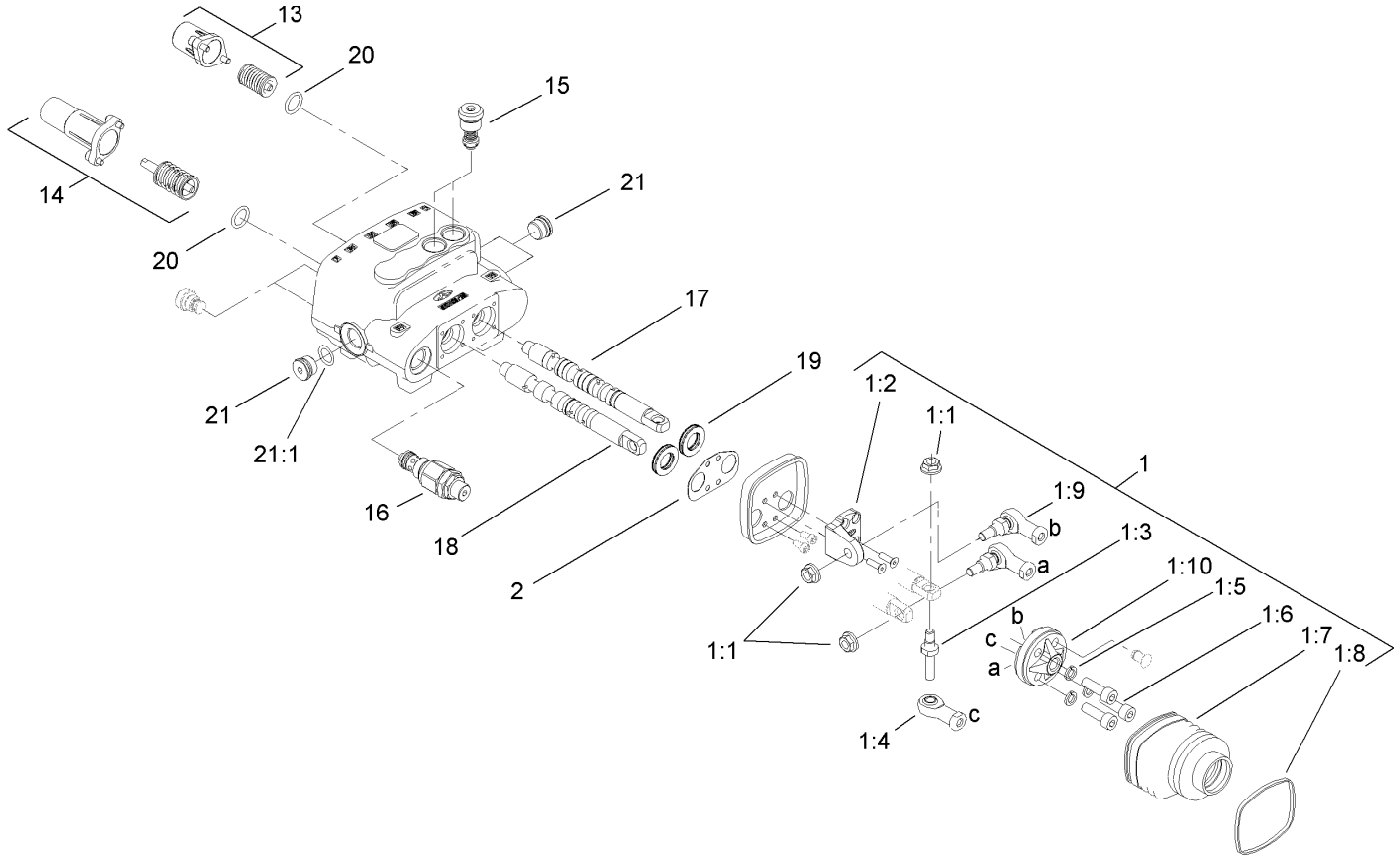


# Two Spool Valve Assembly No. 106-9307

| Ref. | Part Number | Qty. | Description |
|---|---|---|---|
| 1 | 106-7724 | 1 | Joystick Kit |
| 1:1 | 98-0668 | 3 | Nut |
| 1:2 | 106-7726 | 1 | Pivot-Joystick |
| 1:3 | 106-7727 | 1 | Pin-Joystick |
| 1:4 | 106-7728 | 1 | End-Rod |
| 1:5 | 42-9850 | 3 | Washer-Lock, Spring |
| 1:6 | 98-5828 | 3 | Screw-HSH |
| 1:7 | 106-7729 | 1 | Bellow-Rubber |
| 1:8 | 3290-379 | 1 | Tie-Cable |
| 1:9 | 106-7730 | 2 | Joint-Joystick |
| 1:10 | 106-7731 | 1 | Holder-Articulated |
| 2 | 106-7725 | 1 | Seal-Joystick |
| 13 | 106-7732 | 1 | Valve Spring Kit |
| 14 | 106-7733 | 1 | Detent Spring Kit |
| 15 | 106-7734 | 2 | Valve-Relief |
| 16 | 106-7735 | 1 | Valve-Relief, Main |
| 17 | 106-7736 | 1 | Spool-Valve |
| 18 | 106-7737 | 1 | Spool-Valve |
| 19 | 106-7738 | 2 | Seal-Valve, Spool |
| 20 | 106-7719 | 2 | Seal-Valve |
| 21 | 353-988 | 3 | Plug-Hex |
| 21:1 | 237-79 | 1 | O-Ring |

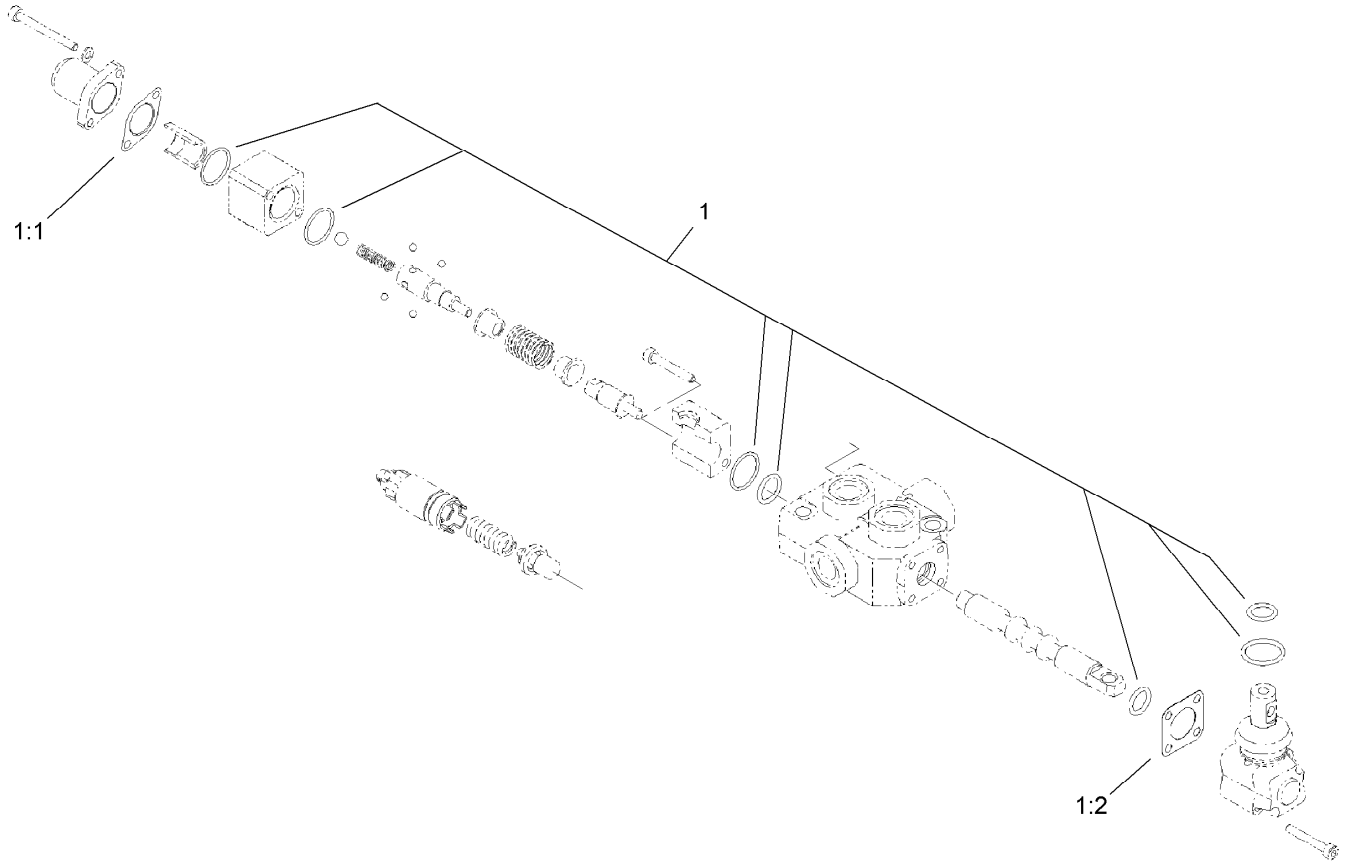


# One Spool Valve Assembly No. 104-2831

| *Ref.* | *Part Number* | *Qty.* | *Description* |
|---|---|---|---|
| 1 | 99-4390 | 1 | Seal Kit |
| 1:1 | 99-3074 | 4 | Gasket |
| 1:2 | 99-3075 | 8 | Gasket |

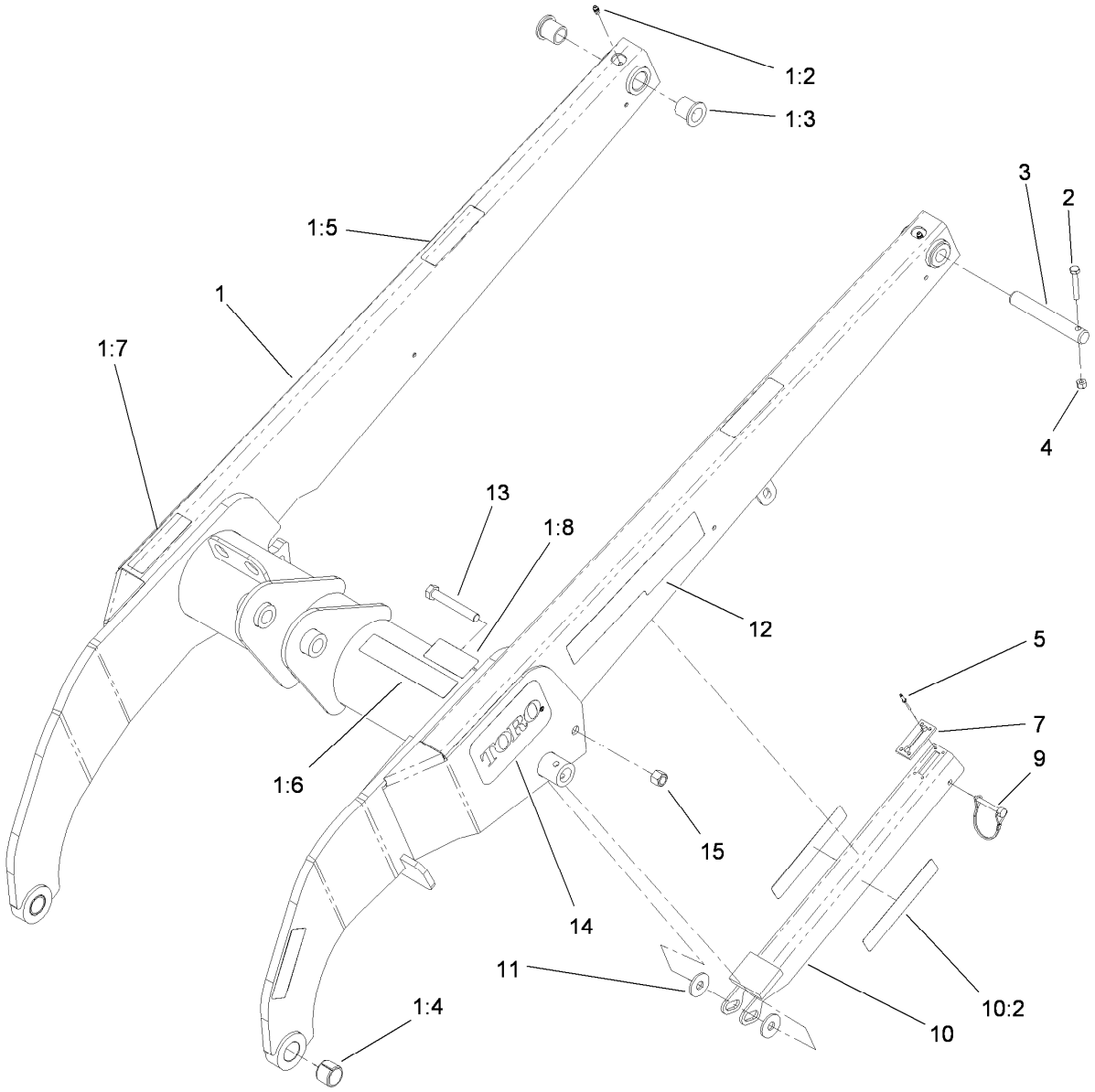


# Loader Arm Assembly

| Ref. | Part Number | Qty. | Description |
|---|---|---|---|
| 1 | 108-4638 | 1 | Loader Arm ASM |
| 1:2 | 302-5 | 2 | Fitting-Grease |
| 1:3 | 95-3577 | 4 | Bushing |
| 1:4 | 98-4871 | 2 | Bushing-Tension |
| 1:5 | 100-8821 | 4 | Decal-Warning, Pinch |
| 1:6 | 115-4856 | 1 | Decal-Caution |
| 1:7 | 115-4855 | 1 | Decal-Caution |
| 1:8 | 100-8822 | 1 | Decal-No Rider |
| 2 | 322-10 | 7 | Screw-HH |
| 3 | 104-2849 | 7 | Pin-Locking |
| 4 | 3296-29 | 7 | Nut-Lock, NI |

| Ref. | Part Number | Qty. | Description |
|---|---|---|---|
| 5 | 95-1687 | 4 | Rivet |
| 7 | 98-0083 | 1 | Stop-Rubber |
| 9 | 112-2583 | 1 | Pin-Locking |
| 10 | 108-4639 | 1 | Locking Arm ASM |
| 10:2 | 115-4858 | 2 | Decal-Danger |
| 11 | 68-1440 | 2 | Washer-Rubber |
| 12 | 115-4868 | 2 | Decal |
| 13 | 325-14 | 1 | Screw-HH |
| 14 | 105-1217 | 2 | Decal |
| 15 | 3296-23 | 1 | Nut-Lock, NI |

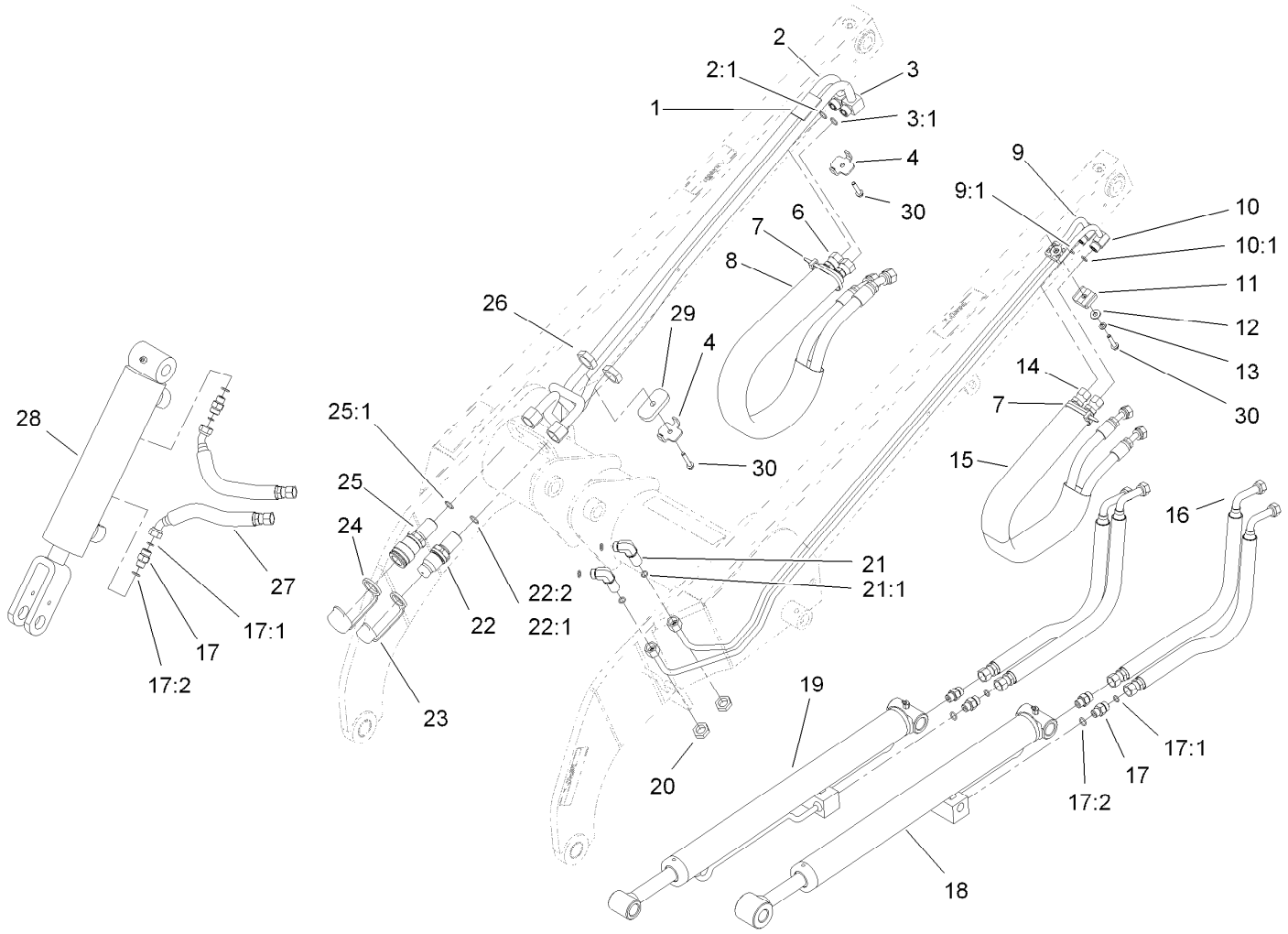


# Loader Arm Hydraulic Assembly

| Ref. | Part Number | Qty. | Description |
|---|---|---|---|
| 1 | 106-9366 | 1 | Spacer-Hardline |
| 2 | 108-6319 | 1 | HYD Tube ASM |
| 2:1 | 237-22 | 1 | O-Ring |
| 3 | 112-2563 | 1 | HYD Tube ASM |
| 3:1 | 237-22 | 1 | O-Ring |
| 4 | 98-0237 | 2 | Plate-Clamp, Tube |
| 6 | 98-0242 | 2 | HYD Hose ASM |
| 7 | 3290-378 | 2 | Tie-Cable |
| 8 | 100-6128 | 1 | Sleeve-Protective |
| 9 | 106-9364 | 1 | HYD Tube ASM |
| 9:1 | 237-22 | 1 | O-Ring |
| 10 | 106-9365 | 1 | HYD Tube ASM |
| 10:1 | 237-22 | 1 | O-Ring |
| 11 | 56-7973 | 2 | Clamp-Tube |
| 12 | 3256-2 | 1 | Washer-Flat |
| 13 | 3253-3 | 1 | Washer-Lock |
| 14 | 98-0213 | 2 | HYD Hose ASM |
| 15 | 100-6127 | 1 | Sleeve-Protective |

| Ref. | Part Number | Qty. | Description |
|---|---|---|---|
| 16 | 98-0216 | 4 | HYD Hose ASM |
| 17 | 340-2 | 6 | Fitting-HYD, Straight |
| 17:1 | 237-22 | 1 | O-Ring |
| 17:2 | 237-42 | 1 | O-Ring |
| 18 | 117-1831 | 1 | Cylinder-Lift, LH |
| 19 | 117-1832 | 1 | Cylinder-Lift, RH |
| 20 | 340-70 | 2 | Nut-Lock |
| 21 | 340-154 | 2 | Union-Bulkhead |
| 21:1 | 237-22 | 2 | O-Ring |
| 22 | 105-8395 | 1 | Bulkhead Nipple ASM |
| 22:1 | 237-65 | 1 | O-Ring |
| 22:2 | 100-6120 | 1 | Seal Kit ● |
| 23 | 100-8815 | 1 | Cap-Dust, Nipple |
| 24 | 100-8816 | 1 | Cap-Dust, Coupler |
| 25 | 105-8394 | 1 | Bulkhead Coupler ASM |
| 25:1 | 237-65 | 1 | O-Ring |
| 26 | 340-74 | 2 | Nut-Lock, Bulkhead |
| 27 | 98-0207 | 2 | HYD Hose ASM |

● Not illustrated

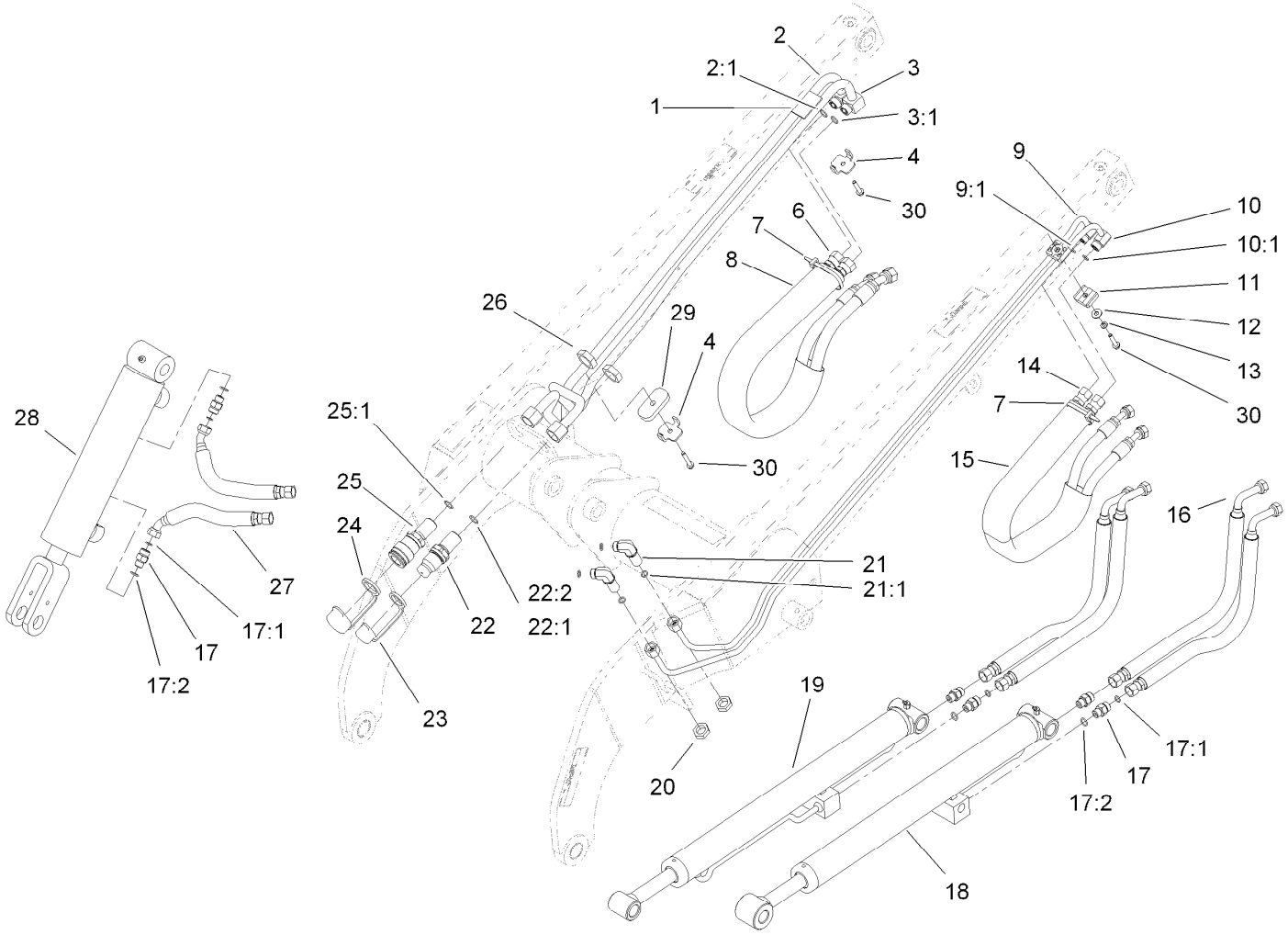


# Loader Arm Hydraulic Assembly (continued)

| Ref. | Part Number | Qty. | Description |
|---|---|---|---|
| 28 | 117-1833 | 1 | Cylinder-Tilt |
| 29 | 112-2565 | 1 | Plate-Hardline |
| 30 | 94-2691 | 3 | Screw-HWH |

● Not illustrated

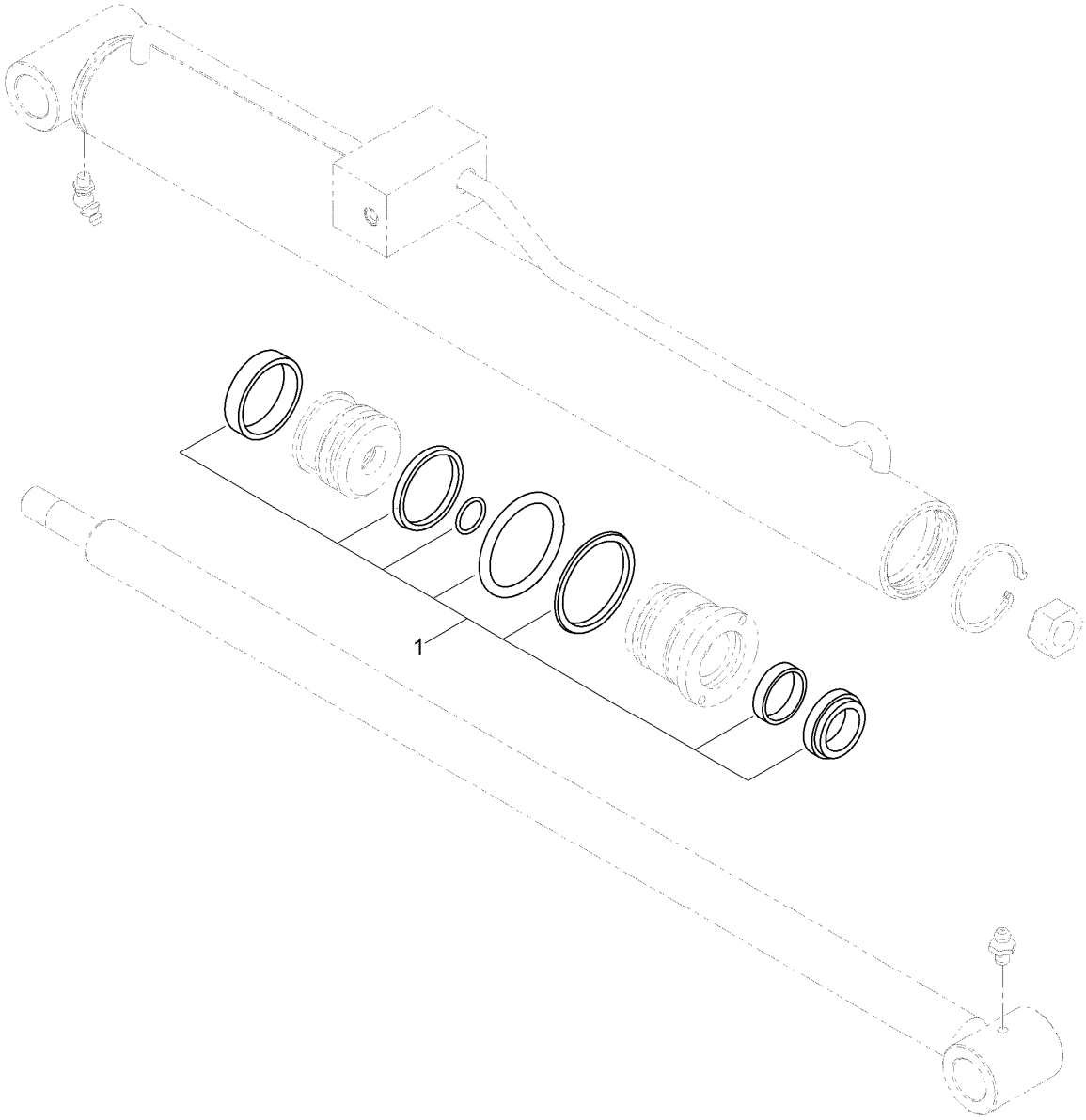


# Left Hand Hydraulic Lift Cylinder Assembly No. 117-1831

| *Ref.* | *Part Number* | *Qty.* | *Description* |
|---|---|---|---|
| 1 | 117-1841 | 1 | Seal Kit |

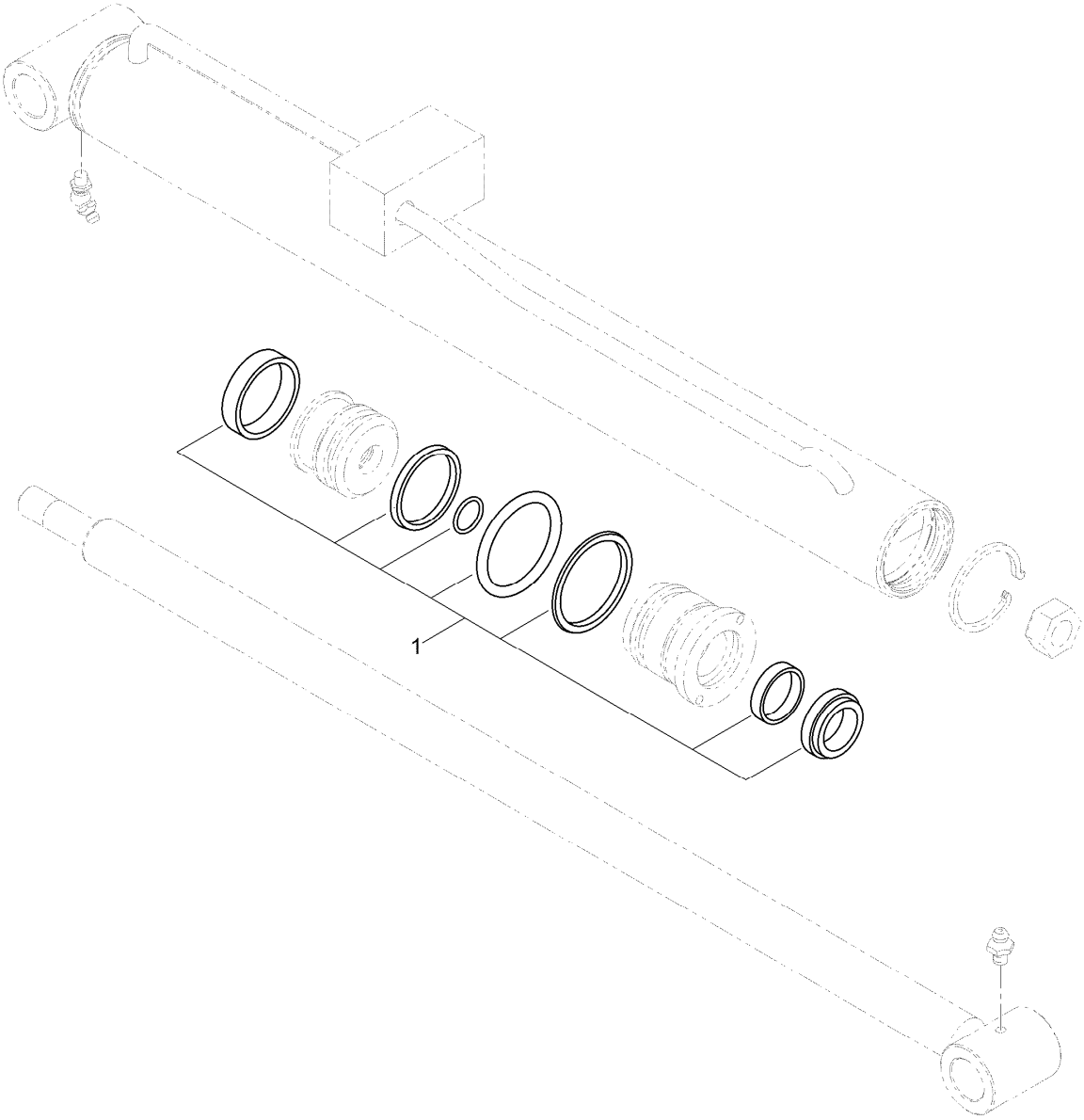


# Right Hand Hydraulic Lift Cylinder Assembly No. 117-1832

| *Ref.* | *Part Number* | *Qty.* | *Description* |
|---|---|---|---|
| 1 | 117-1841 | 1 | Seal Kit |

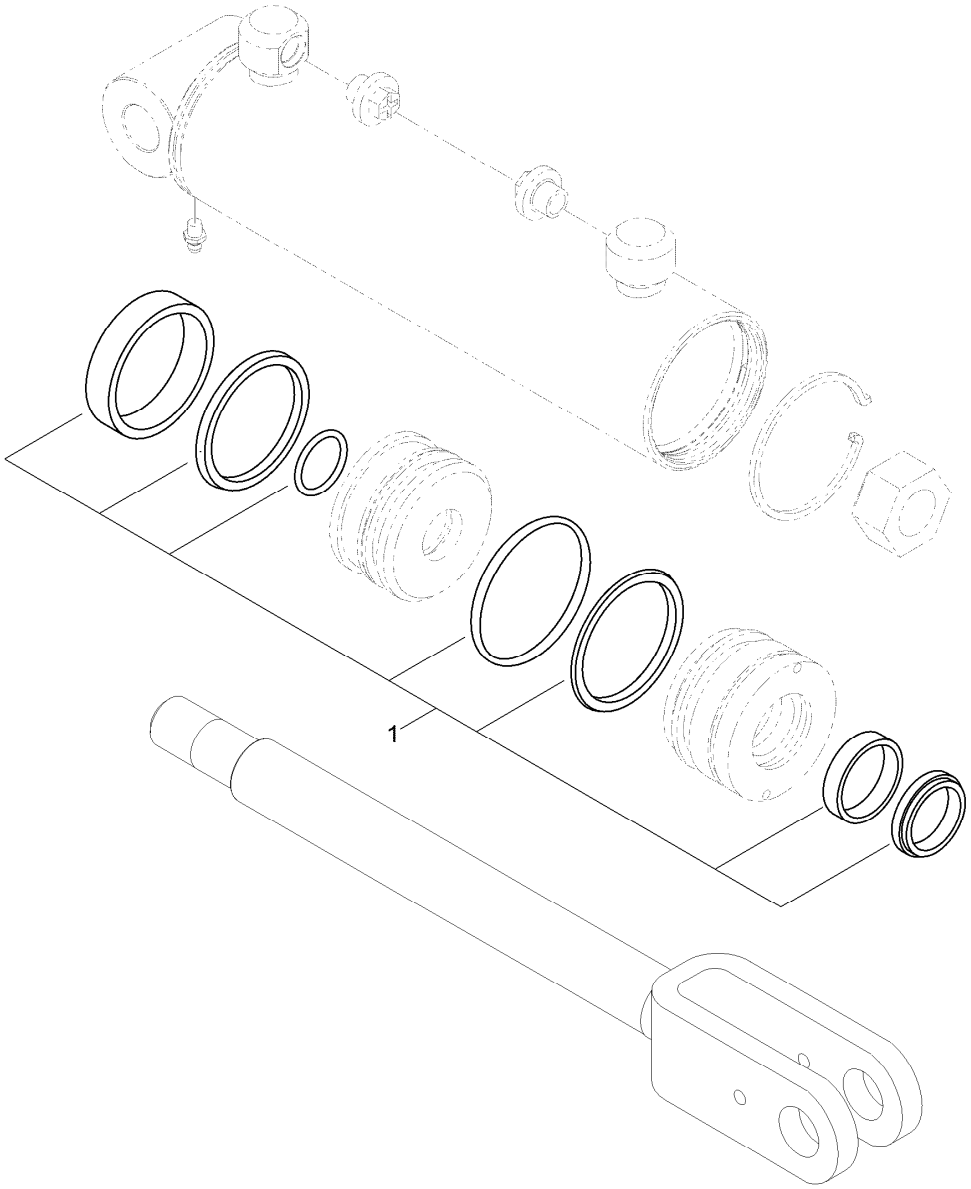


# Hydraulic Cylinder Assembly No. 117-1833

| *Ref.* | *Part Number* | *Qty.* | *Description* |
|---|---|---|---|
| 1 | 117-1838 | 1 | Seal Kit |

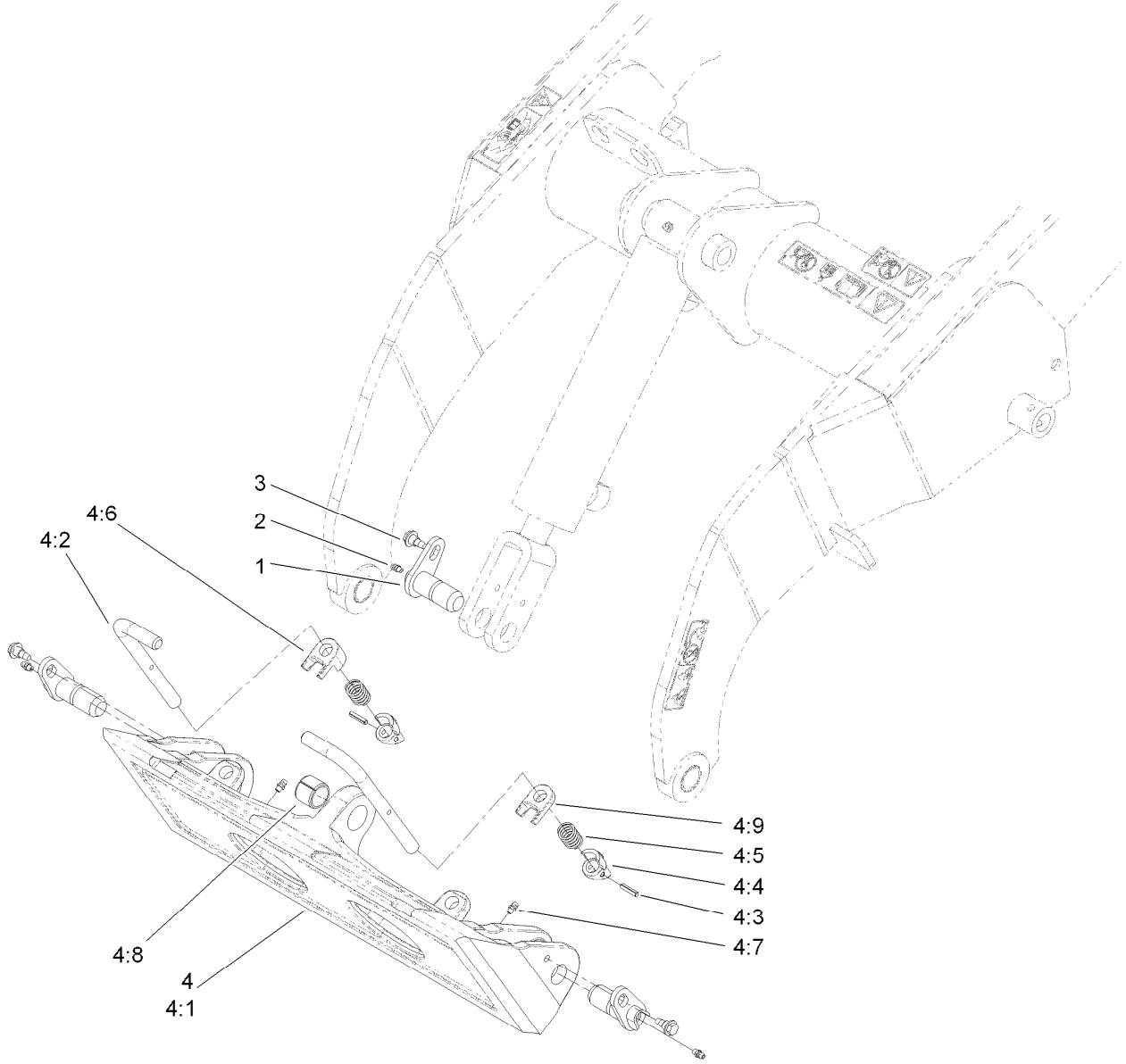


# Quick Attach Assembly

| *Ref.* | *Part Number* | *Qty.* | *Description* |
|---|---|---|---|
| 1 | 112-2609 | 3 | Pin-Pivot |
| 2 | 302-5 | 3 | Fitting-Grease |
| 3 | 99-5105 | 3 | Bolt-Shoulder |
| 4 | 115-0788 | 1 | Quick Attach ASM |
| 4:1 | 115-0774-03 | 1 | Mount-Qtach |
| 4:2 | 105-8367 | 2 | Pin-Locking |
| 4:3 | 3285-1 | 2 | Pin-Grooved |
| 4:4 | 105-0246 | 2 | Cam |
| 4:5 | 98-4694 | 2 | Spring-Compression |
| 4:6 | 104-5909 | 1 | Stop-RH |
| 4:7 | 302-5 | 2 | Fitting-Grease |
| 4:8 | 98-4871 | 1 | Bushing-Tension |
| 4:9 | 104-5903 | 1 | Stop-LH |

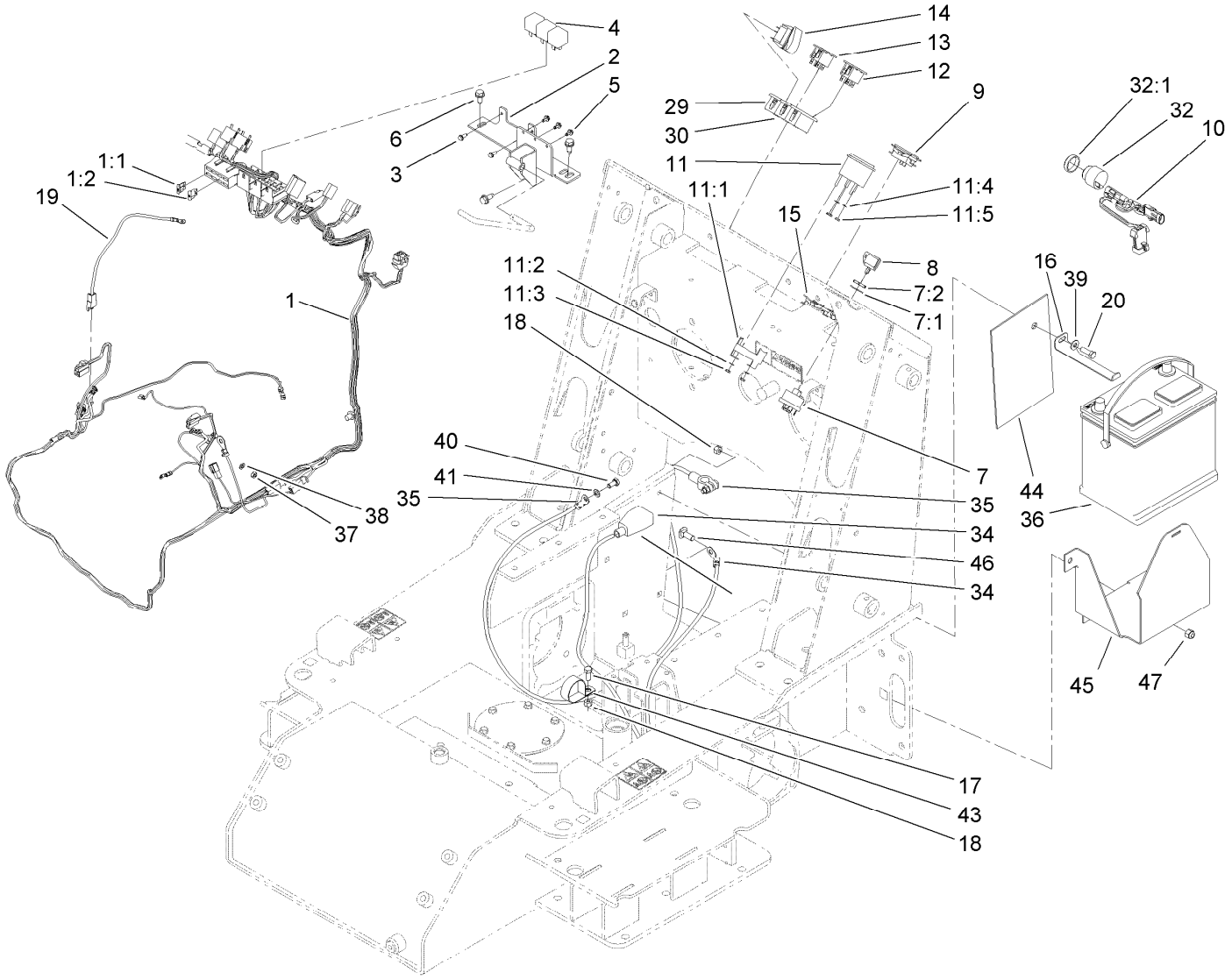


# Electrical System Assembly

| Ref. | Part Number | Qty. | Description |
|---|---|---|---|
| 1 | 117-1329 | 1 | Harness-Wire |
| 1:1 | 112-2463 | 1 | Harness-Fusible Link (18FI) |
| 1:2 | 108-6346 | 1 | Harness-Fusible Link (14FI) |
| 2 | 108-6360-03 | 1 | Relay Bracket ASM |
| 3 | 32104-4 | 2 | Screw |
| 4 | 98-7249 | 3 | Relay |
| 5 | 104-2065 | 3 | Screw-HWH |
| 6 | 32144-11 | 3 | Screw-HWHTF |
| 7 | 88-9830 | 1 | Key Switch ASM |
| 7:1 | 3254-5 | 1 | Washer-Tooth, Internal |
| 7:2 | 218-461 | 1 | Nut-HH |
| 8 | 63-8360 | 2 | Key-Ignition |
| 9 | 120-2244 | 1 | Hourmeter |
| 10 | 115-0730 | 1 | Harness-Wire, Neutral |
| 11 | 66-2940 | 1 | Gauge-Fuel |
| 11:1 | 100-6147 | 1 | Bracket-Mounting, Gauge |
| 11:2 | 3254-1 | 2 | Washer-Lock, Int |
| 11:3 | 3217-27 | 2 | Nut-Hex |
| 11:4 | 3255-24 | 3 | Washer-Lock / EXT |
| 11:5 | 3217-16 | 3 | Nut-Hex |
| 12 | 100-8070 | 1 | Lamp-Warning |

| Ref. | Part Number | Qty. | Description |
|---|---|---|---|
| 13 | 100-8071 | 1 | Lamp-Warning |
| 14 | 110-0811 | 1 | Switch-Rocker |
| 15 | 104-4234 | 1 | Clip-Mounting |
| 16 | 108-6275-03 | 1 | Clamp-Battery |
| 17 | 322-3 | 1 | Screw-HH |
| 18 | 3296-29 | 2 | Nut-Lock, NI |
| 19 | 108-6365 | 1 | Harness-Wire |
| 20 | 322-5 | 1 | Screw-HH |
| 29 | 108-6325 | 2 | Bracket-End |
| 30 | 108-6326 | 1 | Bracket-Middle |
| 32 | 80-9330 | 1 | Audio Alarm ASM |
| 32:1 | 104-5107 | 1 | Nut-Plastic, Knurled |
| 34 | 108-6327 | 1 | Cable-Battery, Positive |
| 35 | 108-6328 | 1 | Cable-Battery, Negative |
| 36 | 104-9979 | 1 | Battery-Dry |
| 37 | 43-2830 | 1 | Nut-Hex |
| 38 | 43-5930 | 1 | Washer-Lock, Spring |
| 39 | 3256-2 | 1 | Washer-Flat |
| 40 | 33104-016 | 1 | Screw-HHF |
| 41 | 3255-8 | 1 | Washer-Lock |
| 43 | 2412-147 | 1 | Clamp |

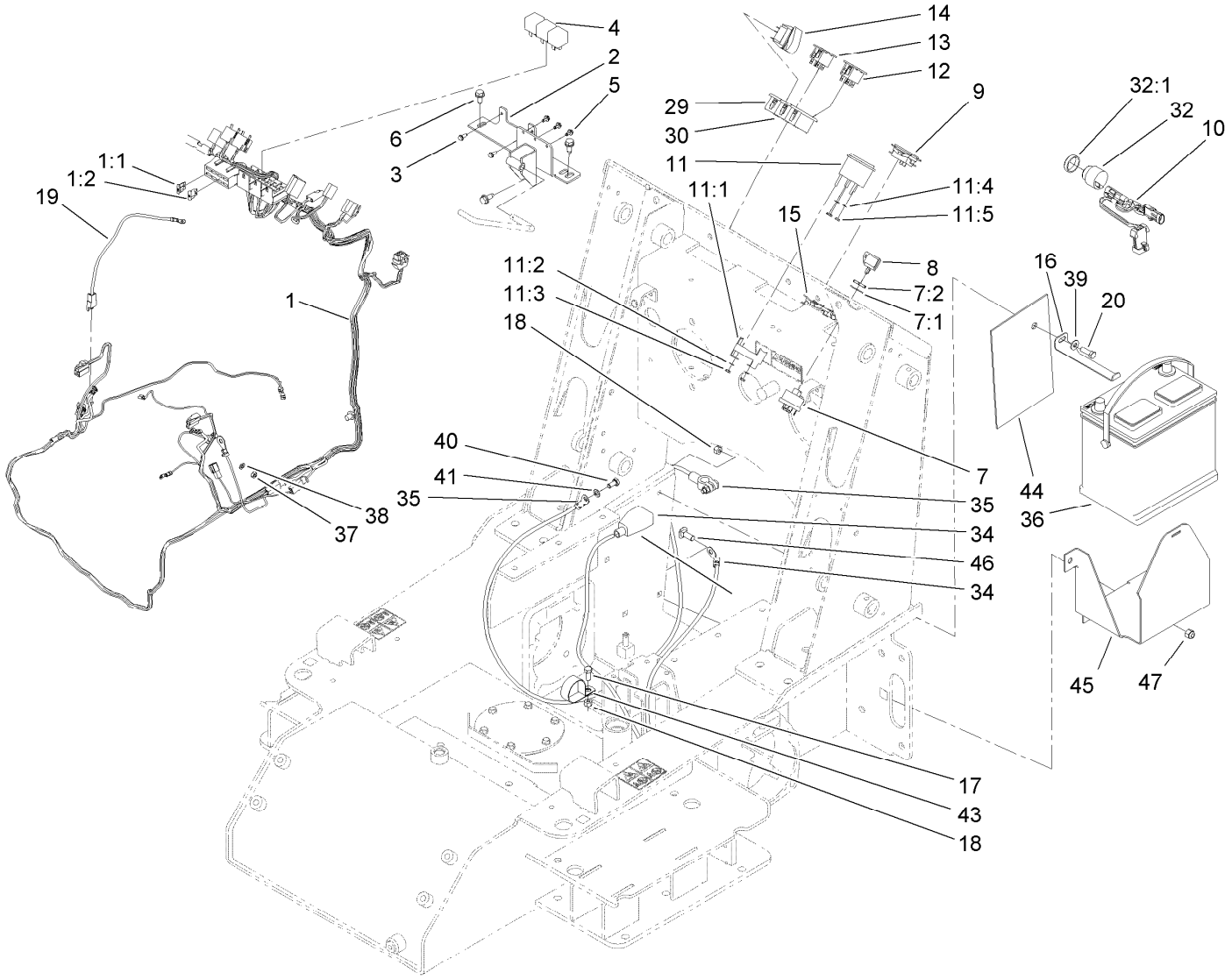


# Electrical System Assembly (continued)

| Ref. | Part Number | Qty. | Description |
|---|---|---|---|
| 44 | 108-6392 | 1 | Guard-Battery |
| 45 | 108-6274-03 | 1 | Mount-Battery |
| 46 | 3231-2 | 3 | Bolt-CARR |
| 47 | 3296-39 | 3 | Nut-Lock, NI |

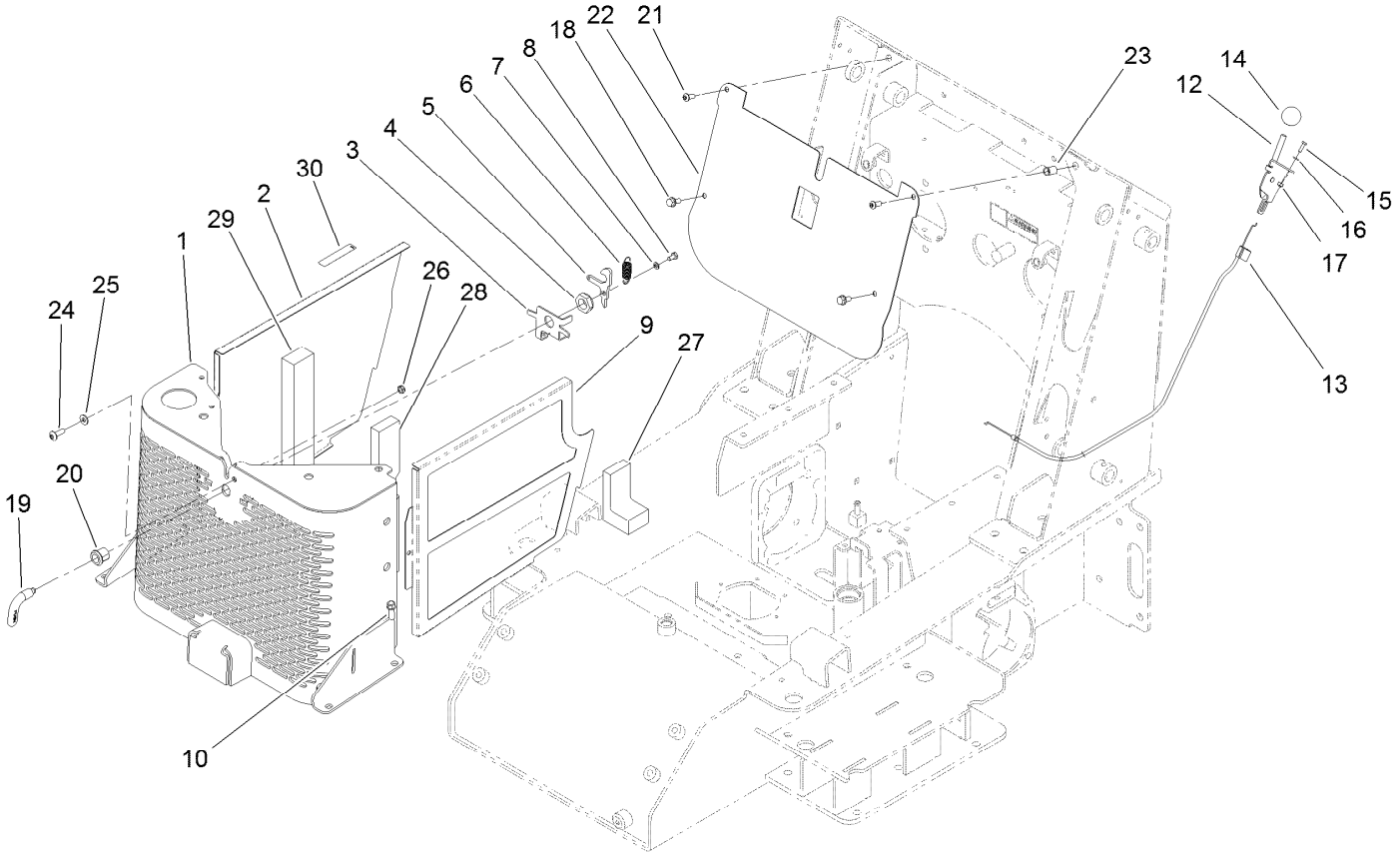


# Grill Assembly

| Ref. | Part Number | Qty. | Description |
|---|---|---|---|
| 1 | 117-1318-03 | 1 | Grill ASM |
| 2 | 117-9963-03 | 1 | RH Side Panel |
| 3 | 106-5729-03 | 1 | Bracket-Latch |
| 4 | 3296-60 | 1 | Nut-Lock, NI |
| 5 | 106-5728 | 1 | Cam-Latch |
| 6 | 104-0869 | 1 | Spring-Brake |
| 7 | 3253-3 | 1 | Washer-Lock |
| 8 | 321-2 | 1 | Screw-HH |
| 9 | 117-9964-03 | 1 | LH Side Panel |
| 10 | 95-1726 | 4 | Screw-Taptite |
| 12 | 108-9730 | 1 | Lever-Control |
| 13 | 108-6337 | 1 | Cable-Throttle |
| 14 | 233-42 | 1 | Knob |
| 15 | 3290-134 | 2 | Screw |
| 16 | 3256-51 | 2 | Washer-Flat |

| Ref. | Part Number | Qty. | Description |
|---|---|---|---|
| 17 | 32149-7 | 2 | Nut-Keps |
| 18 | 3234-5 | 2 | Screw-HHF |
| 19 | 108-5639 | 1 | Handle-Latch |
| 20 | 106-9335 | 1 | Housing-Latch |
| 21 | 3274-55 | 2 | Screw-HSBH |
| 22 | 108-6225 | 1 | Baffle-Electrical |
| 23 | 32148-8 | 2 | Insert-Threaded |
| 24 | 107-8021 | 1 | Screw-PTH |
| 25 | 3256-2 | 1 | Washer-Flat |
| 26 | 3296-47 | 1 | Nut-Lock, NI |
| 27 | 108-6375 | 2 | Seal-Foam |
| 28 | 108-6371 | 2 | Seal-Foam |
| 29 | 108-6369 | 1 | Seal-Foam |
| 30 | 93-6681 | 1 | Decal-Warning, Fan |

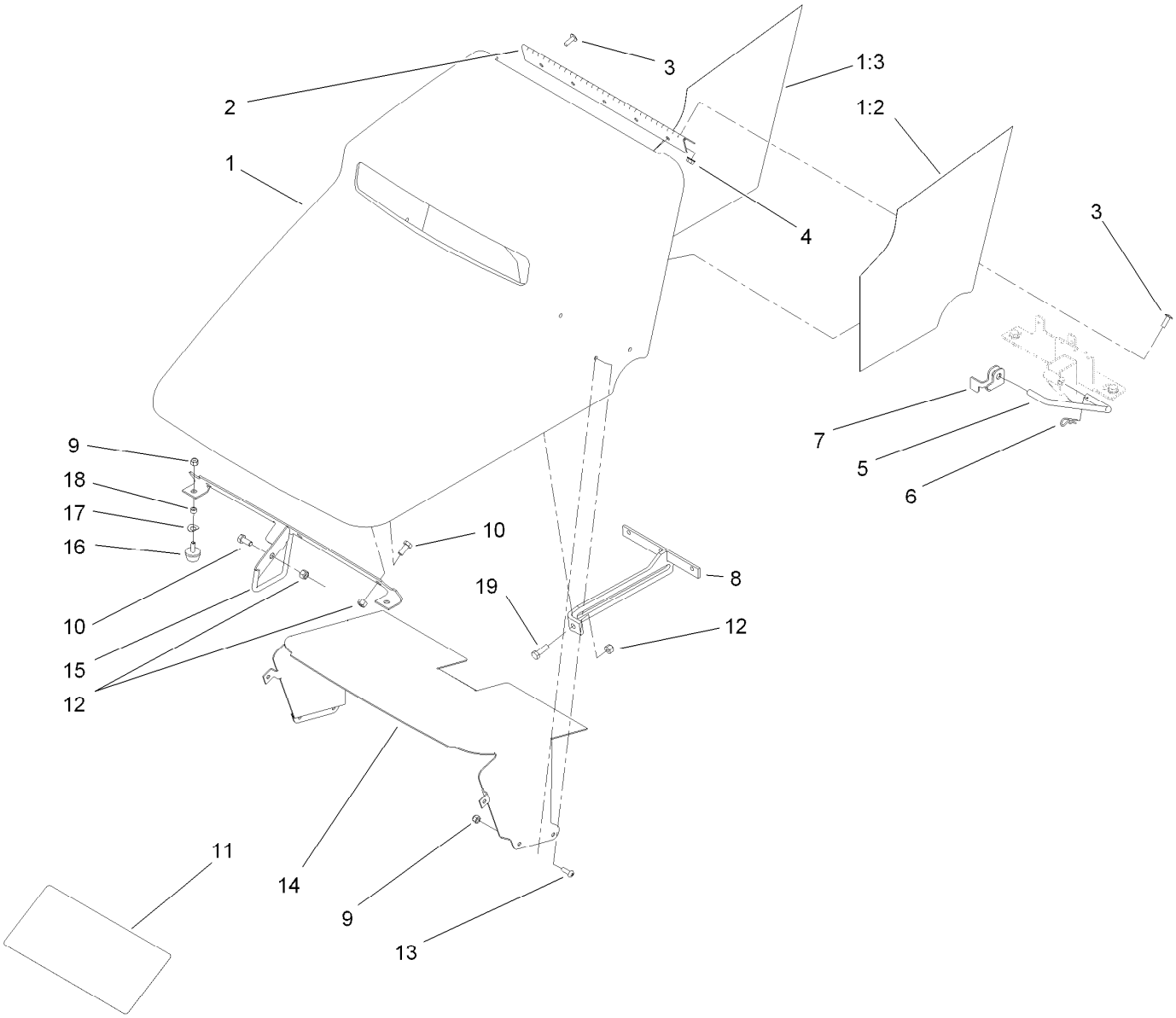


# Hood Assembly

| Ref. | Part Number | Qty. | Description |
|---|---|---|---|
| 1 | 112-2460 | 1 | Hood ASM |
| 1:2 | 112-2464 | 1 | Foiltape-LH |
| 1:3 | 112-2465 | 1 | Foiltape-RH |
| 2 | 100-1284 | 1 | Hinge-Hood |
| 3 | 9114604 | 9 | Screw-Head, Truss |
| 4 | 32128-33 | 4 | Nut-HF |
| 5 | 108-6357 | 1 | Rod-Support, Hood |
| 6 | 3290-250 | 1 | Pin-Hair |
| 7 | 115-0714 | 1 | Bracket-Latch, Locking |
| 8 | 112-2448-03 | 1 | Prop Rod Bracket ASM |
| 9 | 3296-42 | 13 | Nut-Lock, NI |

| Ref. | Part Number | Qty. | Description |
|---|---|---|---|
| 10 | 322-3 | 5 | Screw-HH |
| 11 | 117-1807 | 1 | Decal-Service |
| 12 | 3296-29 | 5 | Nut-Lock, NI |
| 13 | 3258-166 | 6 | Screw-PRH |
| 14 | 108-6286 | 1 | Baffle-Hood |
| 15 | 108-6287-03 | 1 | Rod Latch ASM |
| 16 | 1-523420 | 2 | Bumper |
| 17 | 3290-301 | 2 | Washer-Spring |
| 18 | 106-9308 | 2 | Spacer |
| 19 | 322-5 | 1 | Screw-HH |

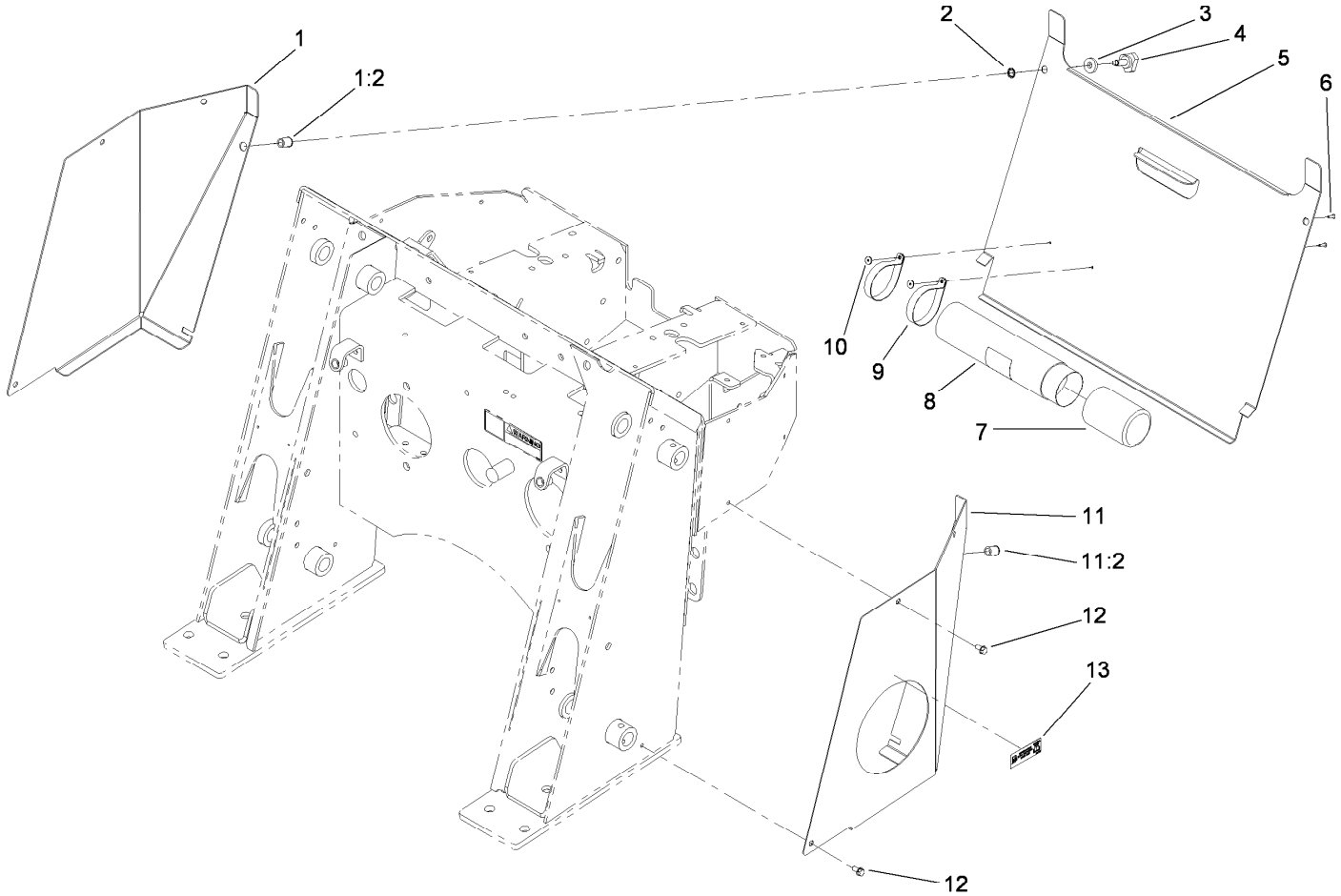


# Rear Access Cover Assembly

| *Ref.* | *Part Number* | *Qty.* | *Description* |
|---|---|---|---|
| 1 | 106-9342 | 1 | RH Rear Cover Support ASM |
| 1:2 | 32148-9 | 1 | Insert-Nut |
| 2 | 32151-72 | 2 | Ring-Retaining |
| 3 | 106-0565 | 2 | Washer-Rubber |
| 4 | 95-9648 | 2 | Knob |
| 5 | 106-9339-01 | 1 | Cover-Access, Rear |
| 6 | 3269-17 | 2 | Rivet-Pop |
| 7 | 104-7048 | 1 | Cap-Housing |
| 8 | 104-7050 | 1 | Tube-Manual |
| 9 | 2412-120 | 2 | Clamp-R |
| 10 | 3269-10 | 2 | Washer-Back |
| 11 | 106-9343 | 1 | LH Rear Cover Support ASM |
| 11:2 | 32148-9 | 1 | Insert-Nut |
| 12 | 9266714 | 6 | Screw-HWH |
| 13 | 114-9600 | 1 | Decal-Low Sulfur |

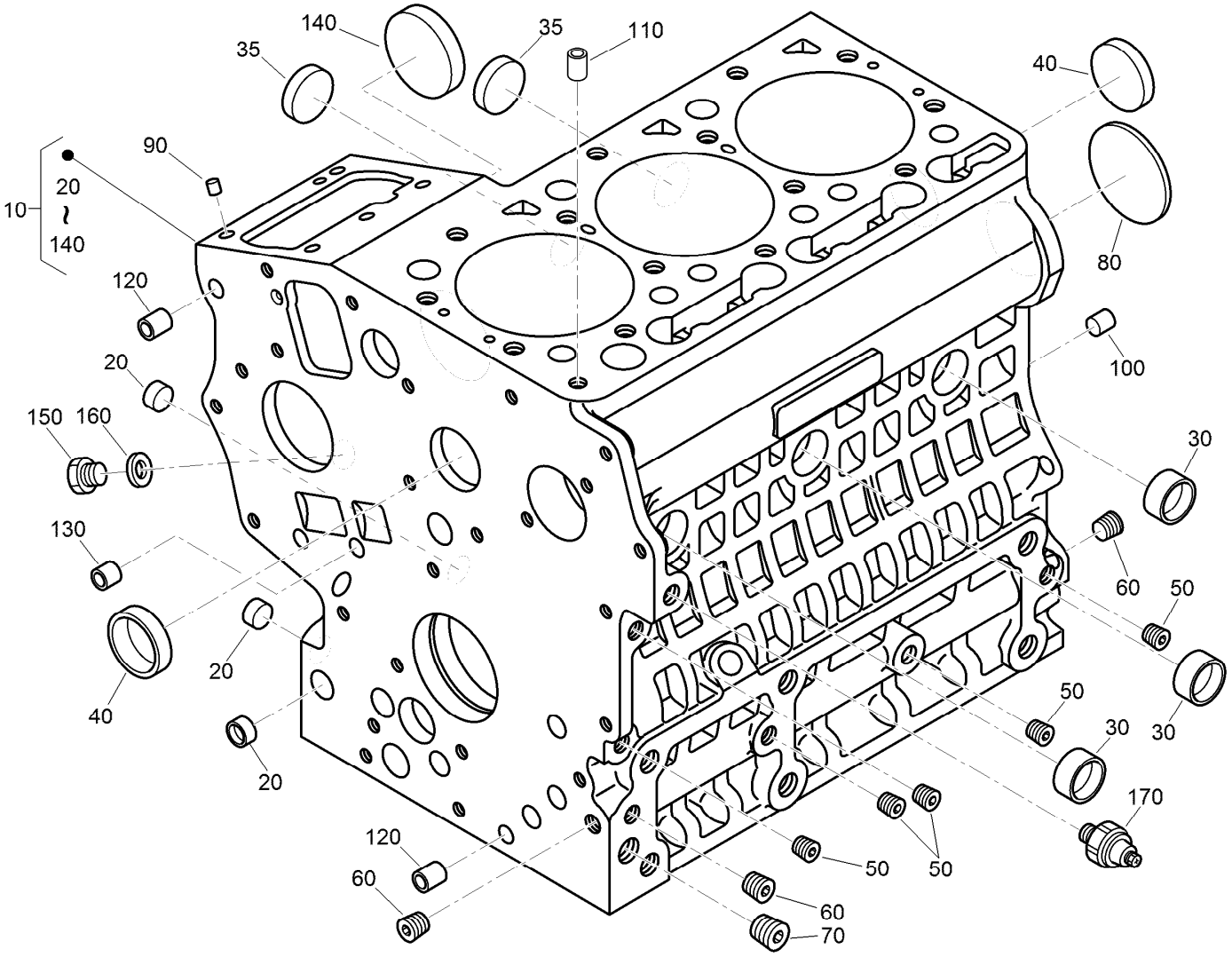


# Crankcase Assembly

| Ref. | Part Number | Qty. | Description |
|---|---|---|---|
| 10 | 130-1486 | 1 | Crankcase ASM |
| 20 | 100-2019 | 3 | Cap-Sealing |
| 30 | 100-2020 | 3 | Cap-Sealing |
| 35 | 110-3702 | 2 | Cap-Sealing |
| 40 | 98-9398 | 2 | Cap-Sealing |
| 50 | 98-9687 | 5 | Plug |
| 60 | 98-7487 | 3 | Plug |
| 70 | 98-7488 | 1 | Plug |
| 80 | 100-1851 | 1 | Plug-Expansion |

| Ref. | Part Number | Qty. | Description |
|---|---|---|---|
| 90 | 98-9375 | 2 | Pin-Straight |
| 100 | 98-9377 | 2 | Pin-Straight |
| 110 | 98-7506 | 1 | Pin-Pipe |
| 120 | 100-2051 | 2 | Pin-Pipe |
| 130 | 100-2051 | 2 | Pin-Pipe |
| 140 | 100-1991 | 1 | Cover-Fuel, Camshaft |
| 150 | 99-3447 | 1 | Plug |
| 160 | 112-8325 | 1 | Washer |
| 170 | 98-7764 | 1 | Switch-Oil |

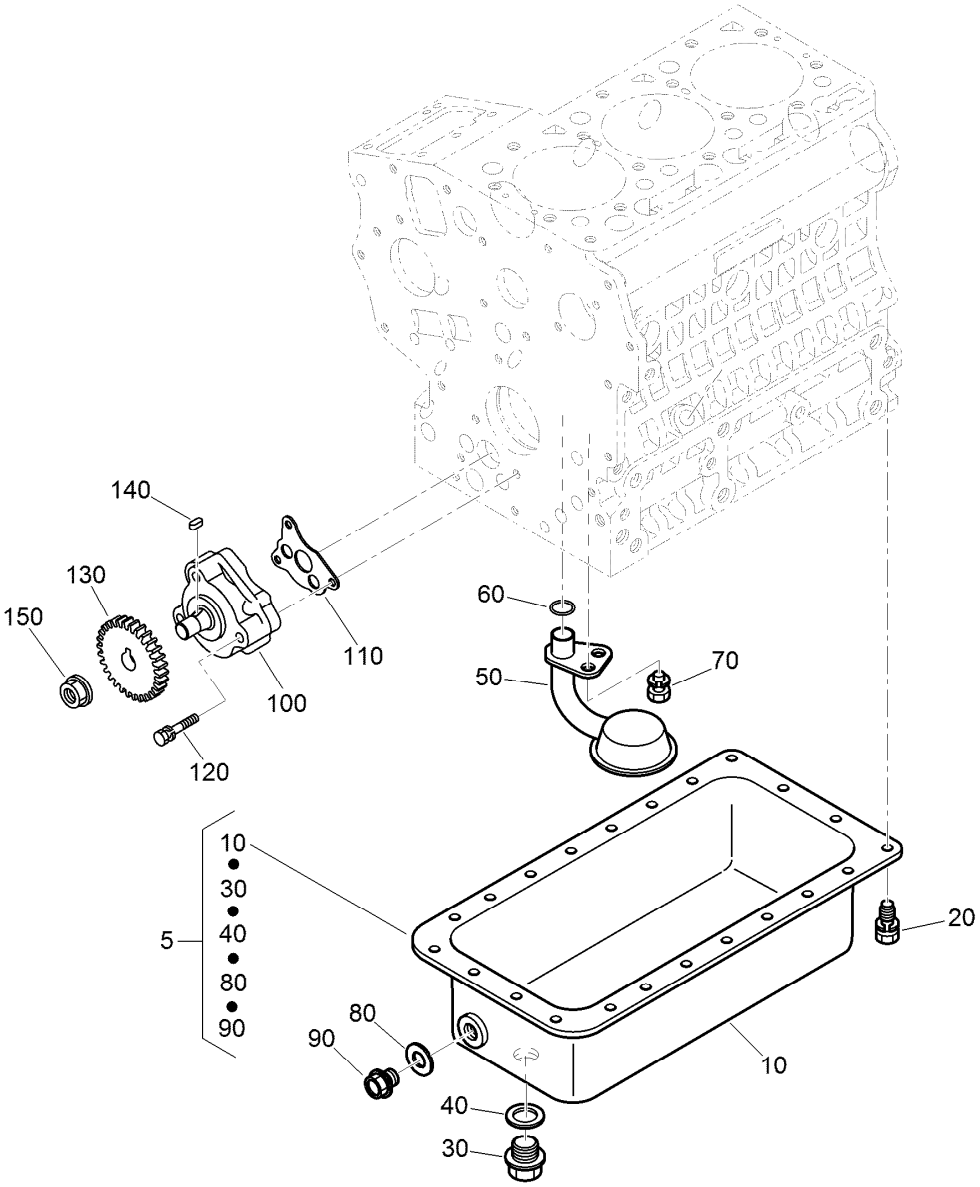


# Oil Pan and Oil Pump Assembly

| Ref. | Part Number | Qty. | Description |
|---|---|---|---|
| 5 | 112-8327 | 1 | Oil Pan Kit |
| 10 | 112-2523 | 1 | Pan-Oil |
| 20 | 98-9350 | 22 | Bolt |
| 30 | 114-8151 | 1 | Plug-Drain |
| 40 | 110-9715 | 1 | Gasket-Pan, Oil |
| 50 | 100-2001 | 1 | Strainer-Pickup, Oil |
| 60 | 105-3776 | 1 | O-Ring |
| 70 | 100-9195 | 1 | Bolt |

| Ref. | Part Number | Qty. | Description |
|---|---|---|---|
| 80 | 98-7524 | 1 | Gasket |
| 90 | 98-9686 | 1 | Plug-Drain |
| 100 | 100-2002 | 1 | Oil Pump ASM |
| 110 | 100-2003 | 1 | Gasket-Pump, Oil |
| 120 | 100-1923 | 3 | Bolt |
| 130 | 130-1419 | 1 | Gear-Drive, Oil Pump |
| 140 | 98-7658 | 1 | Key-Feather |
| 150 | 100-1779 | 1 | Nut-Flange |

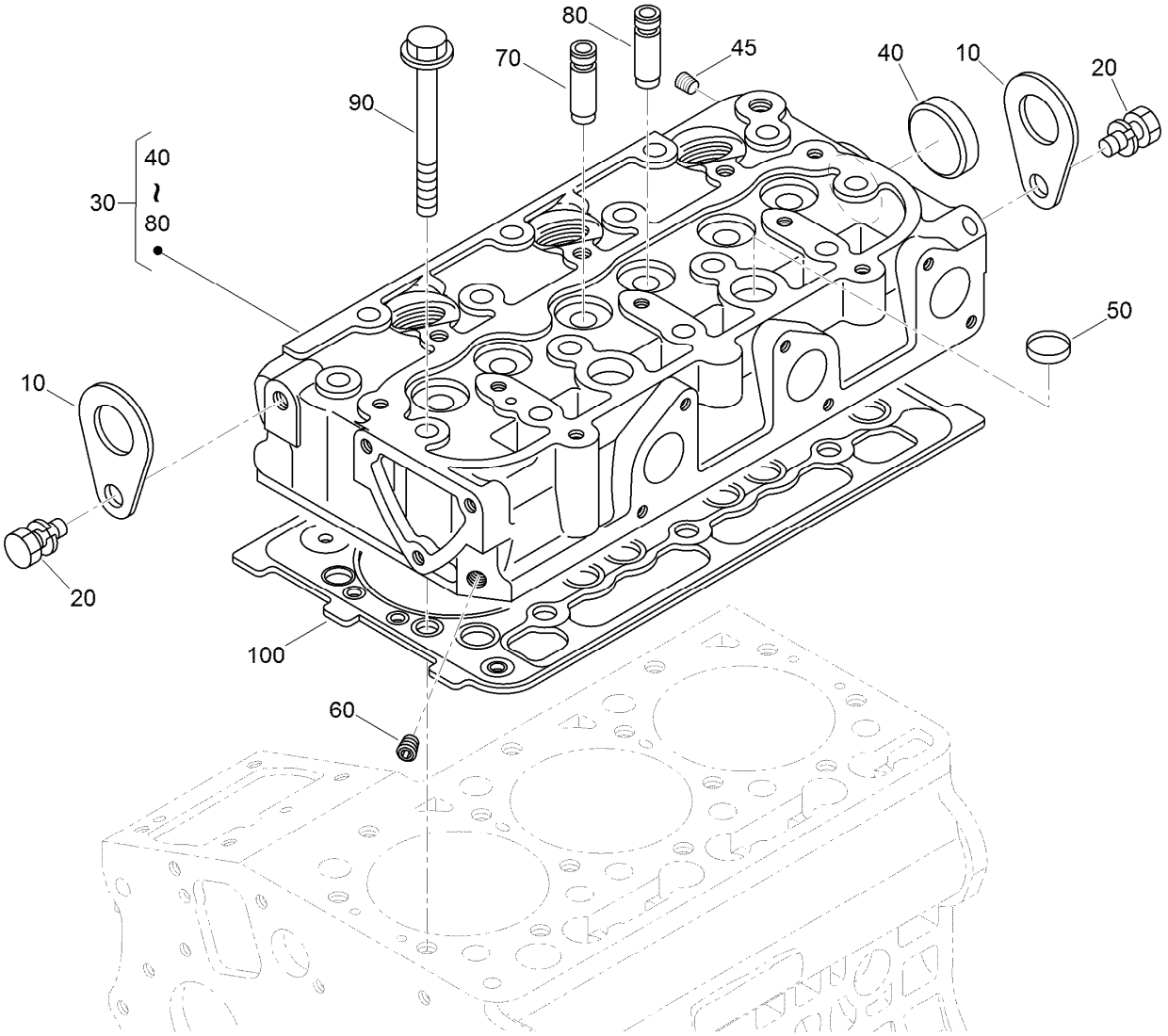


# Cylinder Head Assembly

| *Ref.* | *Part Number* | *Qty.* | *Description* |
|---|---|---|---|
| 10 | 98-7531 | 2 | Hook-Engine |
| 20 | 98-7526 | 2 | Bolt |
| 30 | 130-1533 | 1 | Cylinder Head ASM |
| 40 | 105-3705 | 1 | Cap-Sealing |
| 45 | 98-9444 | 1 | Plug |
| 50 | 98-9389 | 2 | Cap-Sealing |
| 60 | 98-9687 | 1 | Plug |
| 70 | 100-1882 | 3 | Guide-Valve, Inlet |
| 80 | 100-1883 | 3 | Guide-Valve, Exhaust |
| 90 | 100-1820 | 14 | Bolt-Head, Cylinder |
| 100 | 112-2520 | 1 | Gasket-Head, Cylinder |

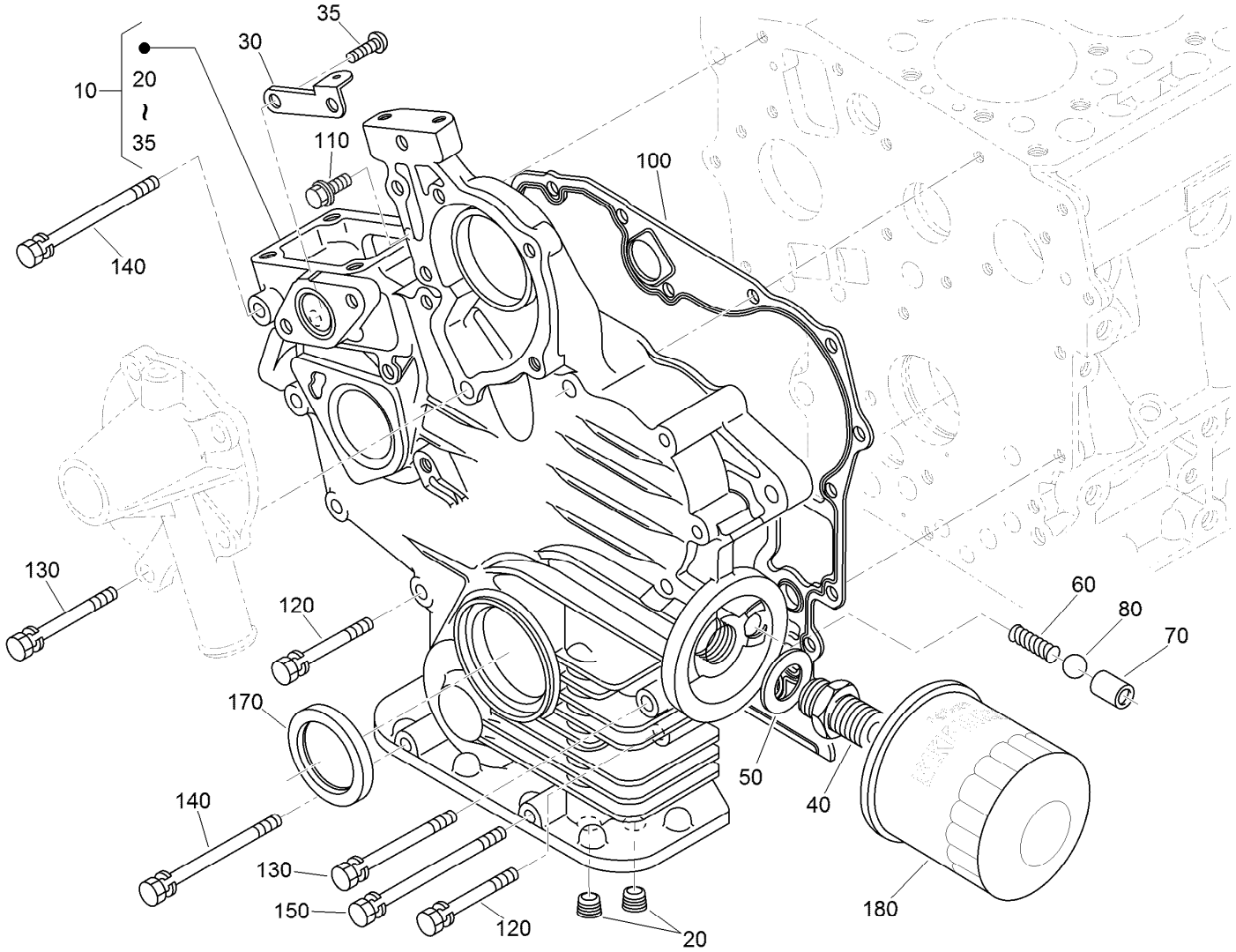


# Gear Case and Oil Filter Cartridge Assembly

| Ref. | Part Number | Qty. | Description |
|---|---|---|---|
| 10 | 117-1702 | 1 | Gear Case ASM |
| 20 | 98-7488 | 2 | Plug |
| 30 | 110-3708 | 1 | Stay-Spring, Start |
| 35 | 100-2040 | 2 | Screw |
| 40 | 98-9388 | 1 | Joint-Pipe |
| 50 | 100-1926 | 1 | Washer-Plain |
| 60 | 100-2004 | 1 | Spring |
| 70 | 100-1894 | 1 | Seat-Valve |
| 80 | 100-1792 | 1 | Ball |

| Ref. | Part Number | Qty. | Description |
|---|---|---|---|
| 100 | 117-0327 | 1 | Gasket-Case, Gear |
| 110 | 127-0403 | 1 | Bolt-Flange |
| 120 | 125-9063 | 9 | Bolt-Sems |
| 130 | 100-1922 | 2 | Bolt |
| 140 | 98-9357 | 2 | Bolt |
| 150 | 110-3710 | 1 | Bolt |
| 170 | 120-7852 | 1 | Seal-Oil |
| 180 | 115-8189 | 1 | Filter-Oil, Engine |

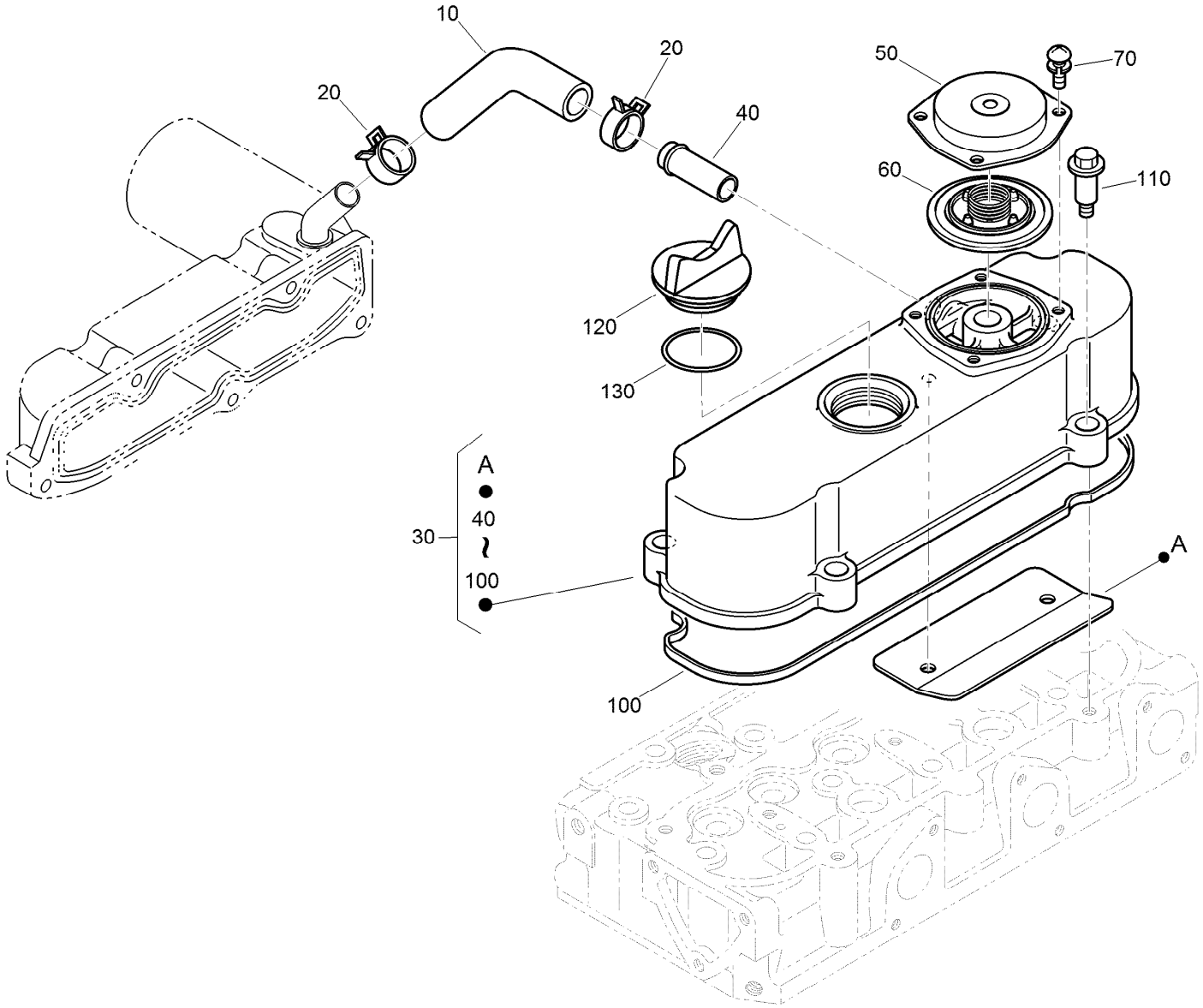


# Cylinder Head Cover Assembly

| Ref. | Part Number | Qty. | Description |
|---|---|---|---|
| 10 | 120-3139 | 1 | Tube-Breather |
| 20 | 110-3712 | 2 | Clamp-Hose |
| 30 | 112-8332 | 1 | Cylinder Head Cover ASM |
| 40 | 98-9580 | 1 | Pipe-Return, Water |
| 50 | 110-3714 | 1 | Cover-Breather |
| 60 | 110-3715 | 1 | Valve-Breather |
| 70 | 98-9364 | 4 | Screw (With Washer) |
| 100 | 112-2521 | 1 | Gasket-Cover, Head |
| 110 | 108-7063 | 4 | Bolt |
| 120 | 107-9075 | 1 | Plug-Filler, Oil |
| 130 | 99-3446 | 1 | O-Ring |

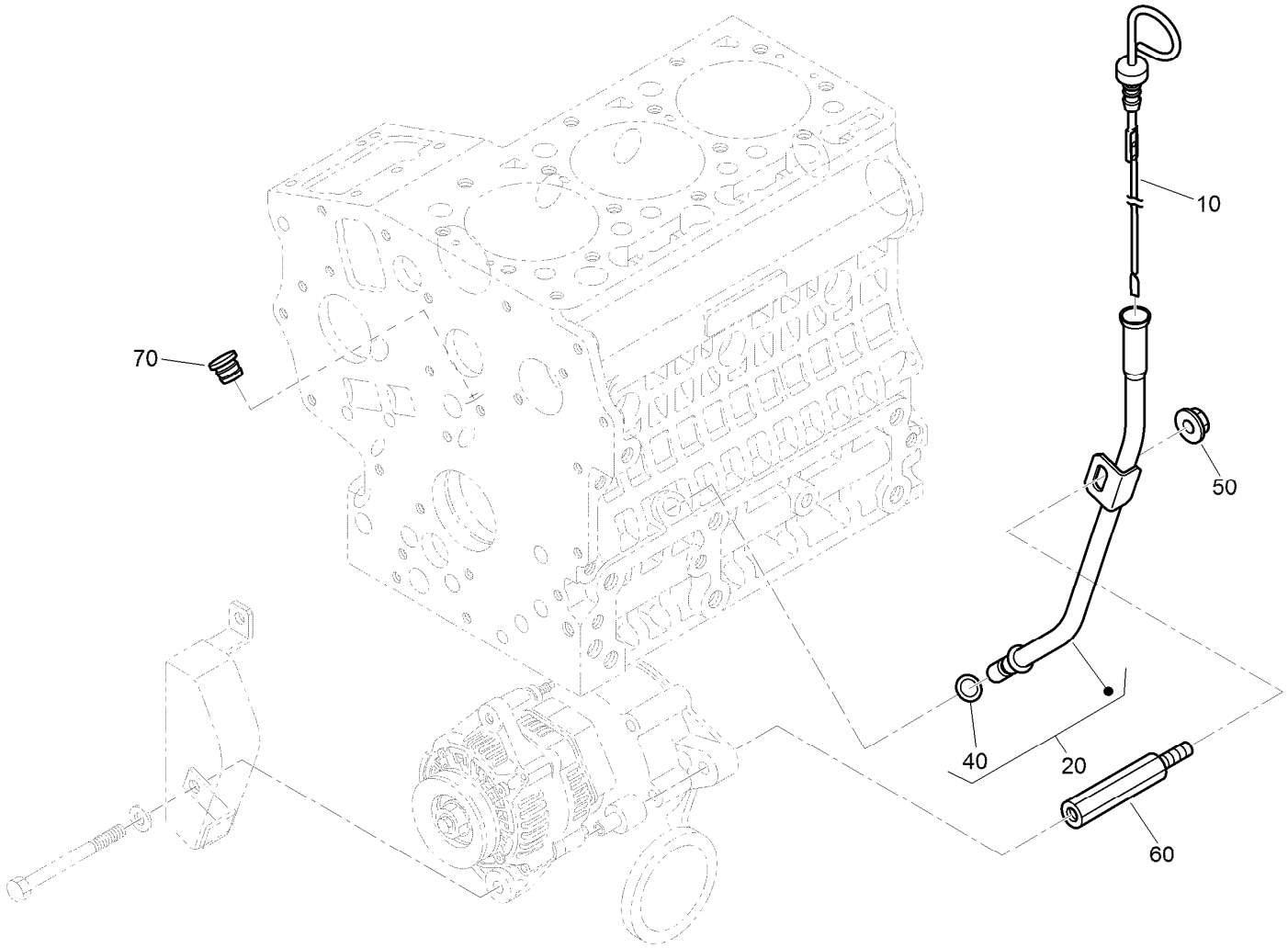


# Dipstick and Guide Assembly

| *Ref.* | *Part Number* | *Qty.* | *Description* |
|---|---|---|---|
| 10 | 112-2489 | 1 | Gauge-Oil |
| 20 | 112-2490 | 1 | Oil Gauge Guide ASM |
| 40 | 98-9722 | 1 | O-Ring |
| 50 | 112-2492 | 1 | Nut-Flange |
| 60 | 112-2493 | 1 | Support-Guide, Gauge |
| 70 | 110-3720 | 2 | Plug-Gauge, Oil |

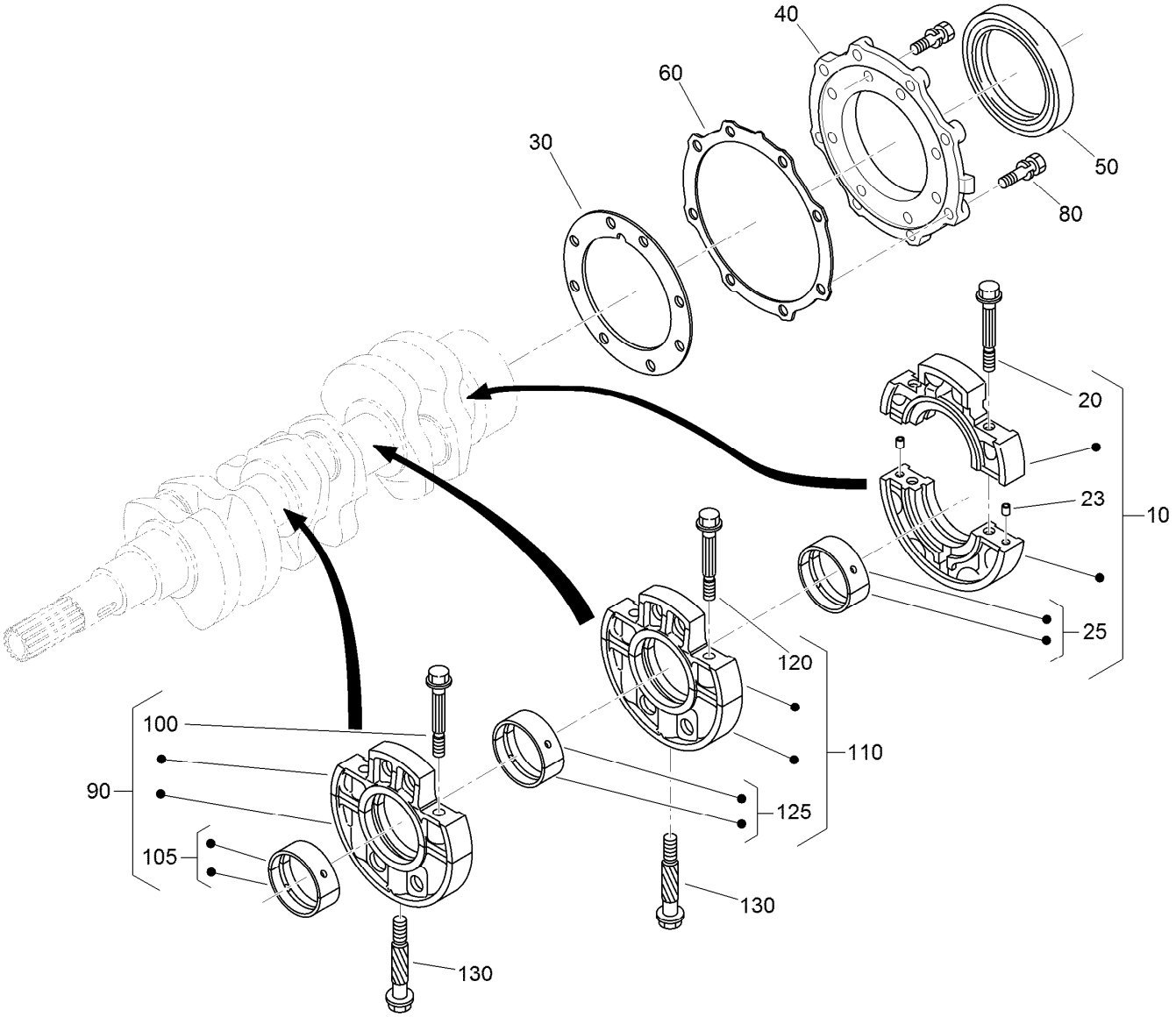


# Main Bearing Case Assembly

| Ref. | Part Number | Qty. | Description |
|---|---|---|---|
| 10 | 125-9064 | 1 | Wheel Bearing Case ASM |
| 20 | 125-9065 | 2 | Bolt-Flange |
| 23 | 125-9082 | 2 | Pin-Straight |
| 25 | 125-9066 | 1 | Crankshaft Metal ASM (STD) |
| 25 | 125-9067 | 1 | Crankshaft Metal ASM (-0.20Mm) |
| 25 | 125-9068 | 1 | Crankshaft Metal ASM (-0.40Mm) |
| 30 | 112-2812 | 1 | Gasket-Case, Bearing |
| 40 | 112-8334 | 1 | Cover-Case, Bearing |
| 50 | 110-3724 | 1 | Seal-Oil |
| 60 | 100-1876 | 1 | Gasket-Cover, Case |
| 80 | 100-1750 | 16 | Bolt |
| 90 | 130-1417 | 1 | Main Bearing Case ASM |
| 100 | 110-3723 | 2 | Bolt-Case, Bearing |

| Ref. | Part Number | Qty. | Description |
|---|---|---|---|
| 105 | 110-3741 | 1 | Crankshaft Metal ASM (STD) |
| 105 | 125-9083 | 1 | Crankshaft Metal ASM (-0.20Mm) |
| 105 | 110-3743 | 1 | Crankshaft Metal ASM (-0.40Mm) |
| 110 | 130-1418 | 1 | Main Bearing Case ASM |
| 120 | 110-3723 | 2 | Bolt-Case, Bearing |
| 125 | 110-3741 | 1 | Crankshaft Metal ASM (STD) |
| 125 | 125-9083 | 1 | Crankshaft Metal ASM (-0.20Mm) |
| 125 | 110-3743 | 1 | Crankshaft Metal ASM (-0.40Mm) |
| 130 | 100-1874 | 2 | Bolt-Case, Bearing |

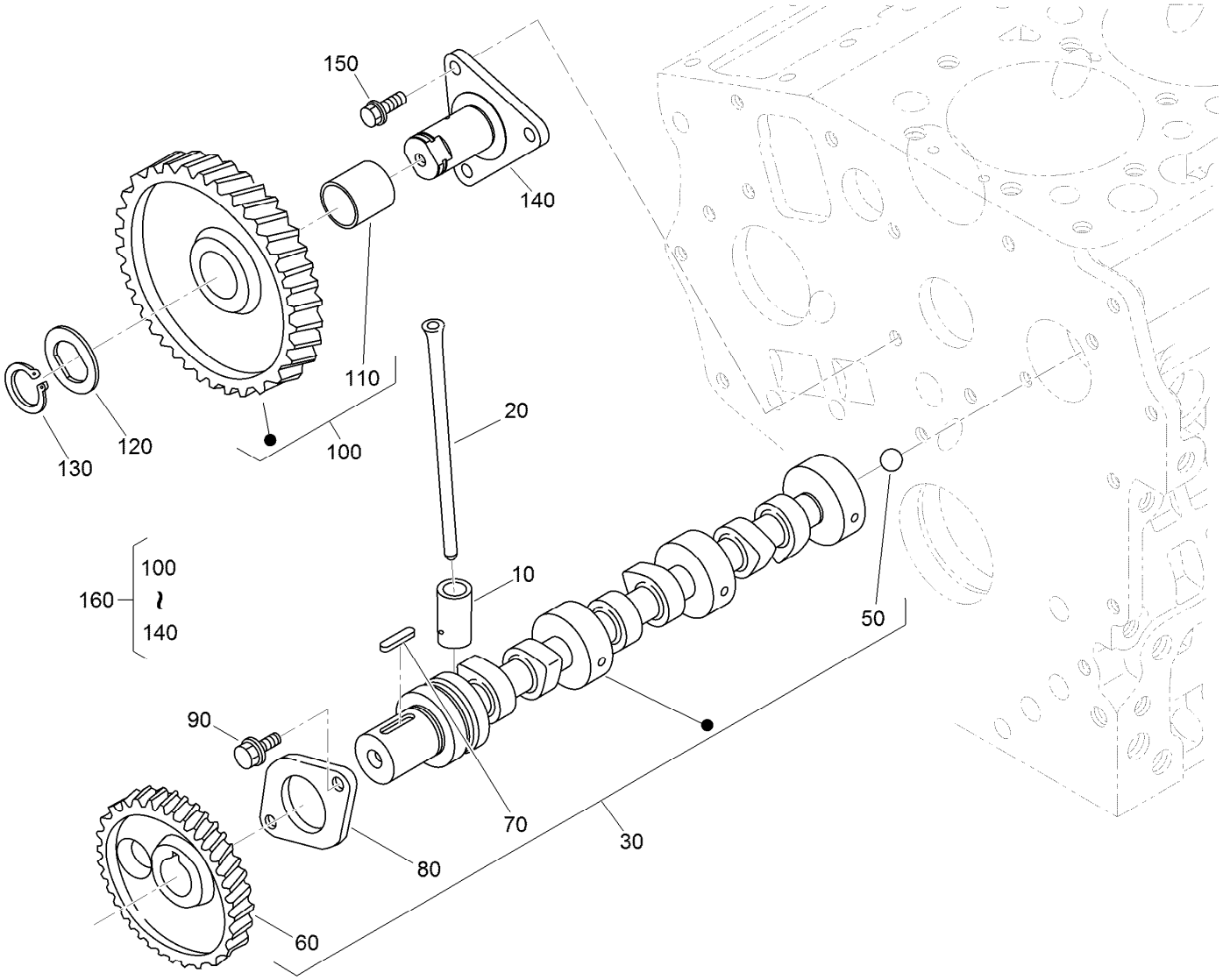


# Camshaft and Idle Gear Shaft Assembly

| Ref. | Part Number | Qty. | Description |
|---|---|---|---|
| 10 | 110-3727 | 6 | Tappet |
| 20 | 100-1989 | 6 | Rod-Push |
| 30 | 130-1492 | 1 | Camshaft ASM |
| 50 | 110-3729 | 1 | Ball |
| 60 | 130-1534 | 1 | Gear-Cam |
| 70 | 98-9378 | 1 | Key-Feather |
| 80 | 100-1887 | 1 | Stopper-Camshaft |
| 90 | 98-9350 | 2 | Bolt |
| 100 | 121-2421 | 1 | Idle Gear ASM |
| 110 | 121-2422 | 1 | Bushing |
| 120 | 100-1970 | 1 | Collar-Gear, Idle |
| 130 | 100-1969 | 1 | Ring-Snap |
| 140 | 100-1967 | 1 | Shaft-Gear, Idle |
| 150 | 100-1774 | 3 | Bolt-Flange |
| 160 | 100-2240 | 1 | Idle Gear ASM |

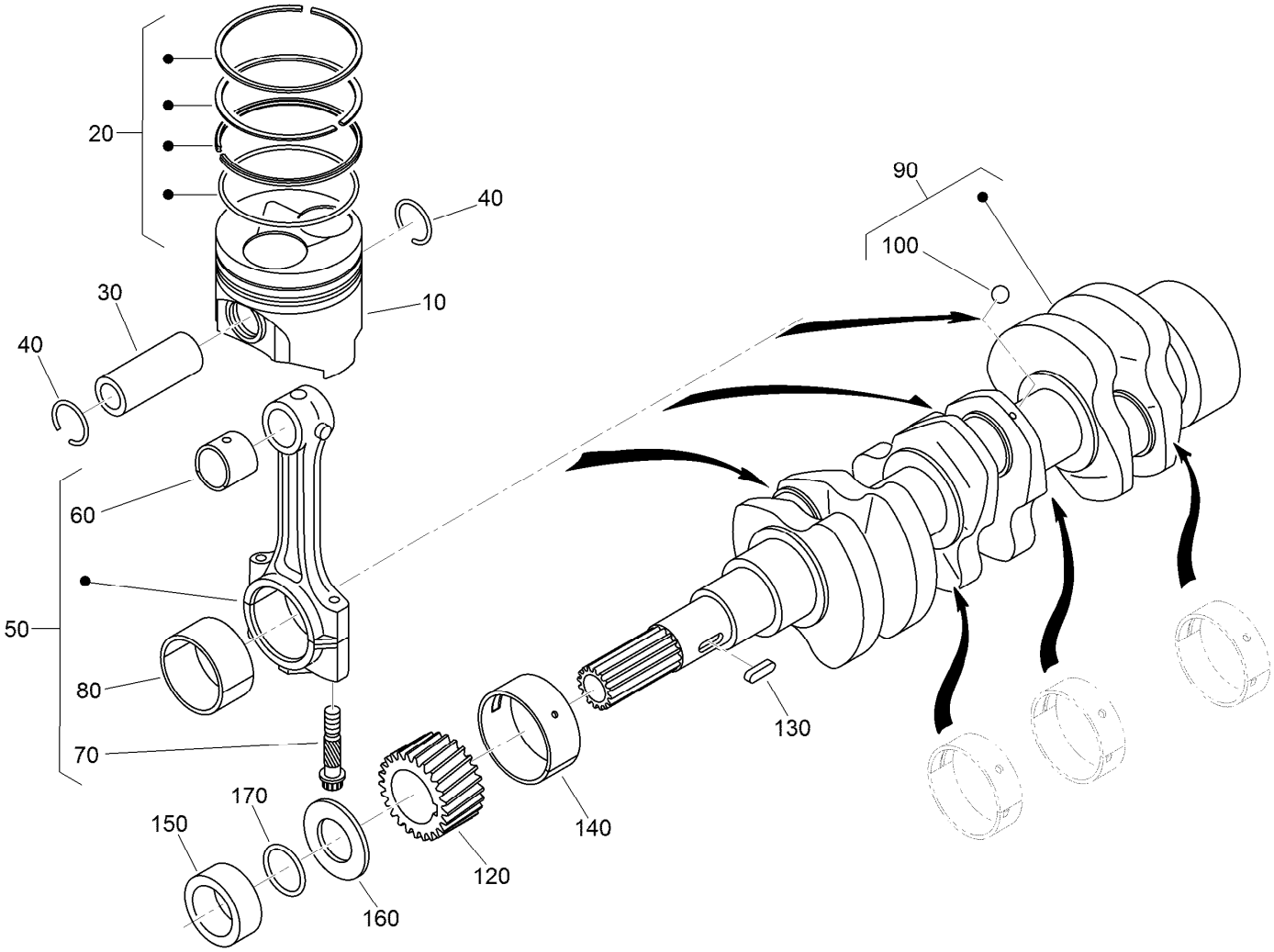


# Piston and Crankshaft Assembly

| Ref. | Part Number | Qty. | Description |
|---|---|---|---|
| 10 | 130-1537 | 3 | Piston |
| 10 | 130-1540 | 3 | Piston |
| 20 | 130-1535 | 3 | Piston Ring ASM |
| 20 | 130-1536 | 3 | Piston Ring ASM |
| 30 | 110-3734 | 3 | Pin-Piston |
| 40 | 100-1835 | 6 | Circlip-Internal |
| 50 | 125-9070 | 3 | Connecting Rod ASM |
| 60 | 110-3736 | 3 | Bushing-Pin, Piston |
| 70 | 100-1999 | 6 | Bolt-Rod, Connecting |
| 80 | 100-2000 | 3 | Metal-Crankpin (STD) |
| 80 | 121-3849 | 3 | Metal-Crankpin (-.20Mm) |

| Ref. | Part Number | Qty. | Description |
|---|---|---|---|
| 80 | 121-2420 | 3 | Metal-Crankpin (-.40Mm) |
| 90 | 117-0308 | 1 | Crankshaft |
| 100 | 100-1791 | 3 | Ball |
| 120 | 100-1891 | 1 | Gear-Crankshaft |
| 130 | 100-1752 | 1 | Key-Feather |
| 140 | 110-3738 | 1 | Metal-Crankshaft (STD) |
| 140 | 121-2424 | 1 | Metal-Crankshaft (-.20Mm) |
| 140 | 121-2425 | 1 | Metal-Crankshaft (-.40Mm) |
| 150 | 100-1890 | 1 | Collar-Crankshaft |
| 160 | 100-1974 | 1 | Slinger-Oil |
| 170 | 100-2209 | 1 | O-Ring |

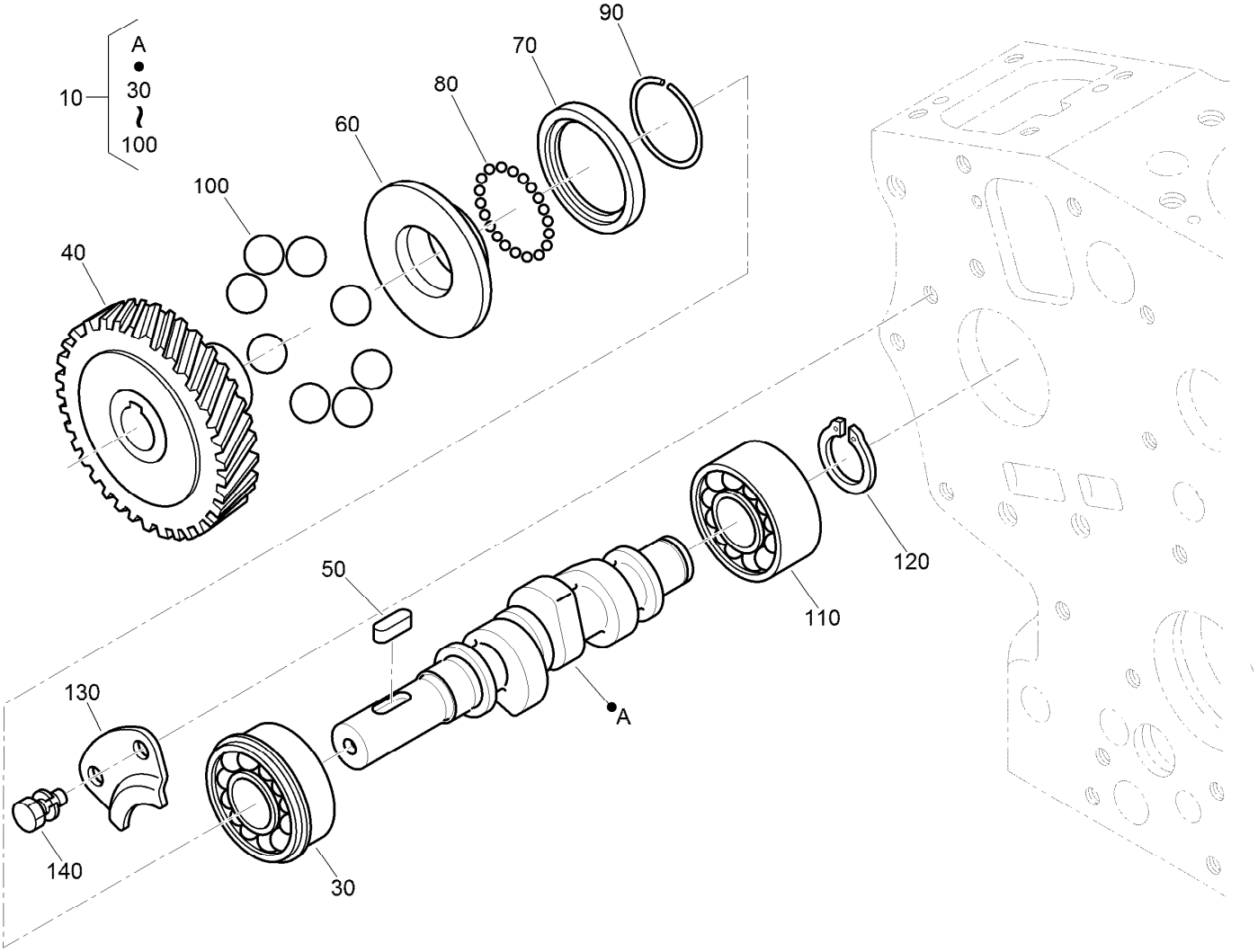


# Fuel Camshaft Assembly

| Ref. | Part Number | Qty. | Description |
|---|---|---|---|
| 10 | 125-9075 | 1 | Fuel Camshaft ASM |
| 30 | 100-1795 | 1 | Bearing-Ball |
| 40 | 100-2006 | 1 | Gear-Pump, Injection |
| 50 | 100-1752 | 1 | Key-Feather |
| 60 | 112-8336 | 1 | Sleeve-Governor |
| 70 | 100-1904 | 1 | Case-Ball, Governor |
| 80 | 100-1790 | 32 | Ball |
| 90 | 100-1843 | 1 | Circ-Clip |
| 100 | 100-1793 | 8 | Ball |
| 110 | 110-3757 | 1 | Bearing-Ball |
| 120 | 100-1784 | 1 | Circ-Clip, External |
| 130 | 100-1888 | 1 | Stopper-Fuel, Camshaft |
| 140 | 98-9350 | 2 | Bolt |

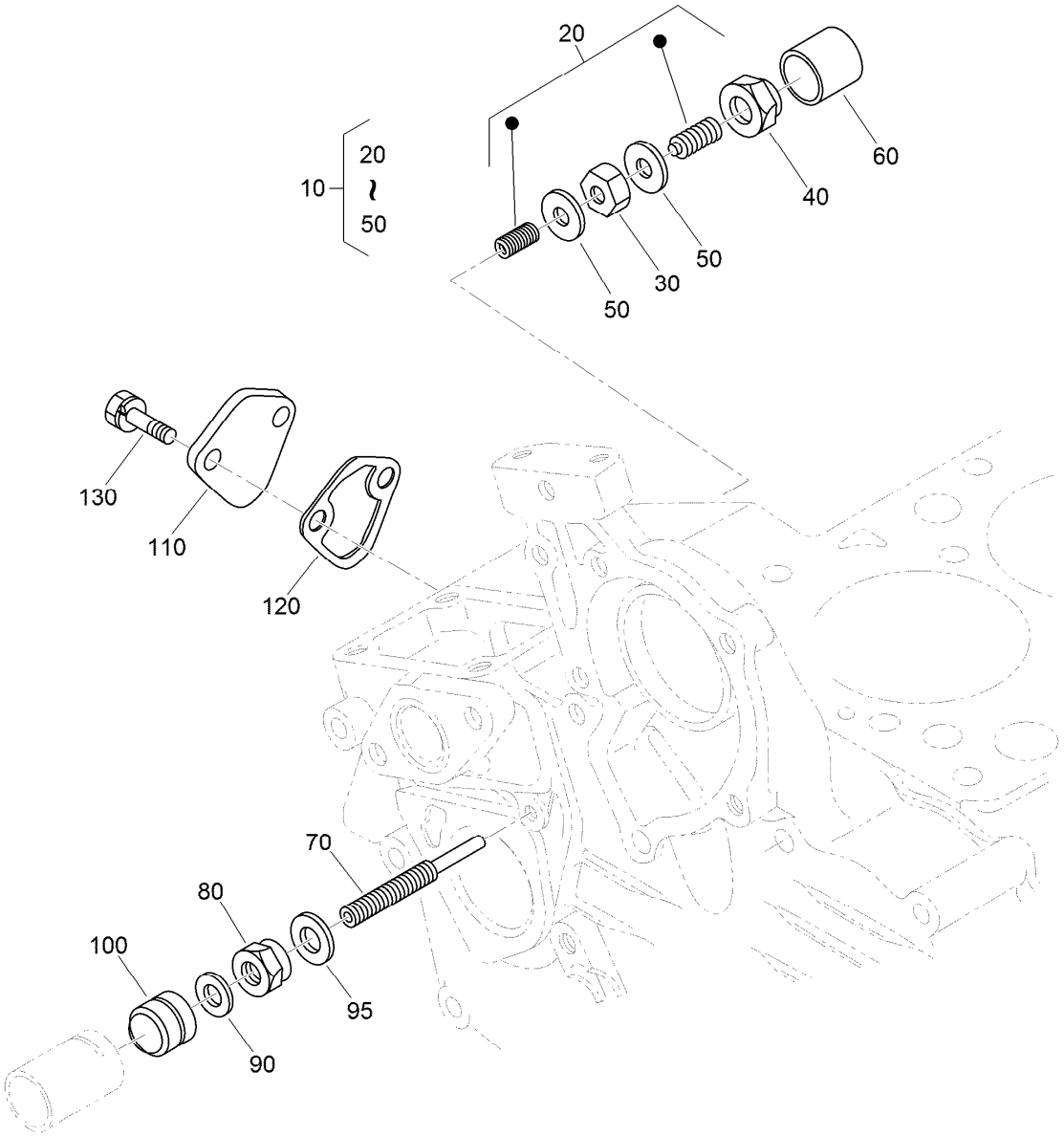


# Idle Apparatus and Fuel Pump Cover Assembly

| *Ref.* | *Part Number* | *Qty.* | *Description* |
|---|---|---|---|
| 10 | 100-1898 | 1 | Idle Apparatus ASM |
| 20 | 100-1899 | 1 | Adjusting Bolt ASM |
| 30 | 100-1846 | 1 | Nut |
| 40 | 100-1901 | 1 | Nut-Cap |
| 50 | 98-7428 | 2 | Gasket |
| 60 | 100-1902 | 1 | Cap |
| 70 | 110-3758 | 1 | Bolt-Adjusting |
| 80 | 100-2175 | 1 | Nut-Lock |
| 90 | 98-7654 | 1 | Gasket |
| 95 | 107-9081 | 1 | Gasket |
| 100 | 99-8387 | 1 | Nut-Cap |
| 110 | 99-3514 | 1 | Cover |
| 120 | 98-9636 | 1 | Gasket-Pump, Fuel |
| 130 | 98-7692 | 2 | Bolt |

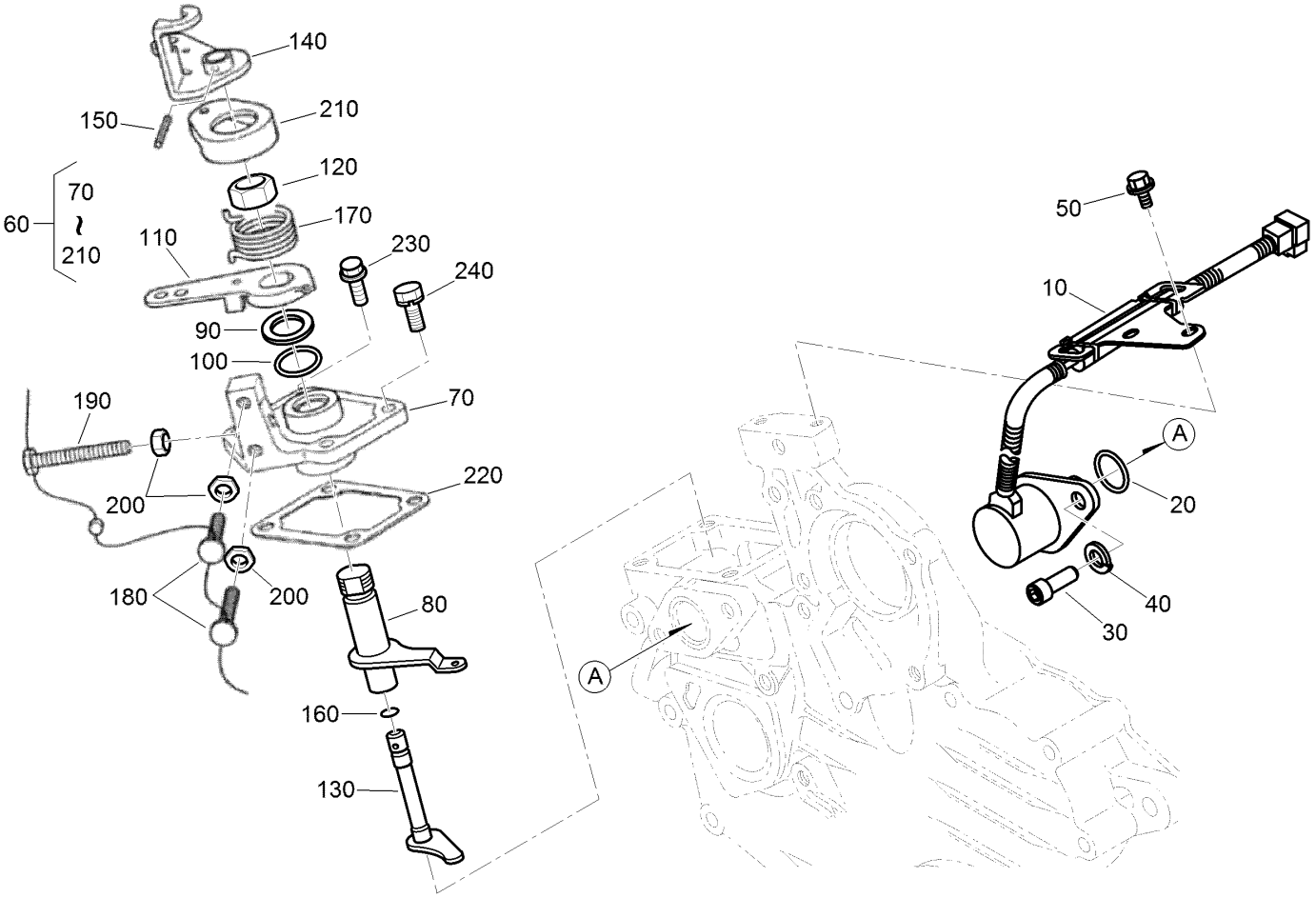


# Stop Solenoid and Speed Control Plate Assembly

| Ref. | Part Number | Qty. | Description |
|---|---|---|---|
| 10 | 117-2719 | 1 | Solenoid Stop ASM |
| 20 | 110-3762 | 1 | O-Ring |
| 30 | 110-3763 | 2 | Bolt-HSH |
| 40 | 98-7699 | 2 | Washer-Spring |
| 50 | 100-1774 | 2 | Bolt-Flange |
| 60 | 110-3769 | 1 | Speed Control Plate ASM |
| 70 | 110-3770 | 1 | Plate-Control, Speed |
| 80 | 110-3771 | 1 | Lever-Governor |
| 90 | 110-3772 | 1 | Collar |
| 100 | 100-2208 | 1 | O-Ring |
| 110 | 110-3773 | 1 | Lever-Control, Speed |
| 120 | 110-3774 | 1 | Nut-Control, Speed |

| Ref. | Part Number | Qty. | Description |
|---|---|---|---|
| 130 | 110-3775 | 1 | Shaft-Lever |
| 140 | 110-3776 | 1 | Lever-Stop, Engine |
| 150 | 110-3777 | 1 | Pin-Spring |
| 160 | 100-2207 | 1 | O-Ring |
| 170 | 110-3778 | 1 | Spring-Return |
| 180 | 120-3133 | 2 | Screw-Stopper |
| 190 | 120-3134 | 1 | Bolt |
| 200 | 98-7572 | 3 | Nut |
| 210 | 110-3779 | 1 | Cap |
| 220 | 100-1962 | 1 | Gasket-Plate, Control |
| 230 | 127-0403 | 2 | Bolt-Flange |
| 240 | 112-2507 | 2 | Bolt |

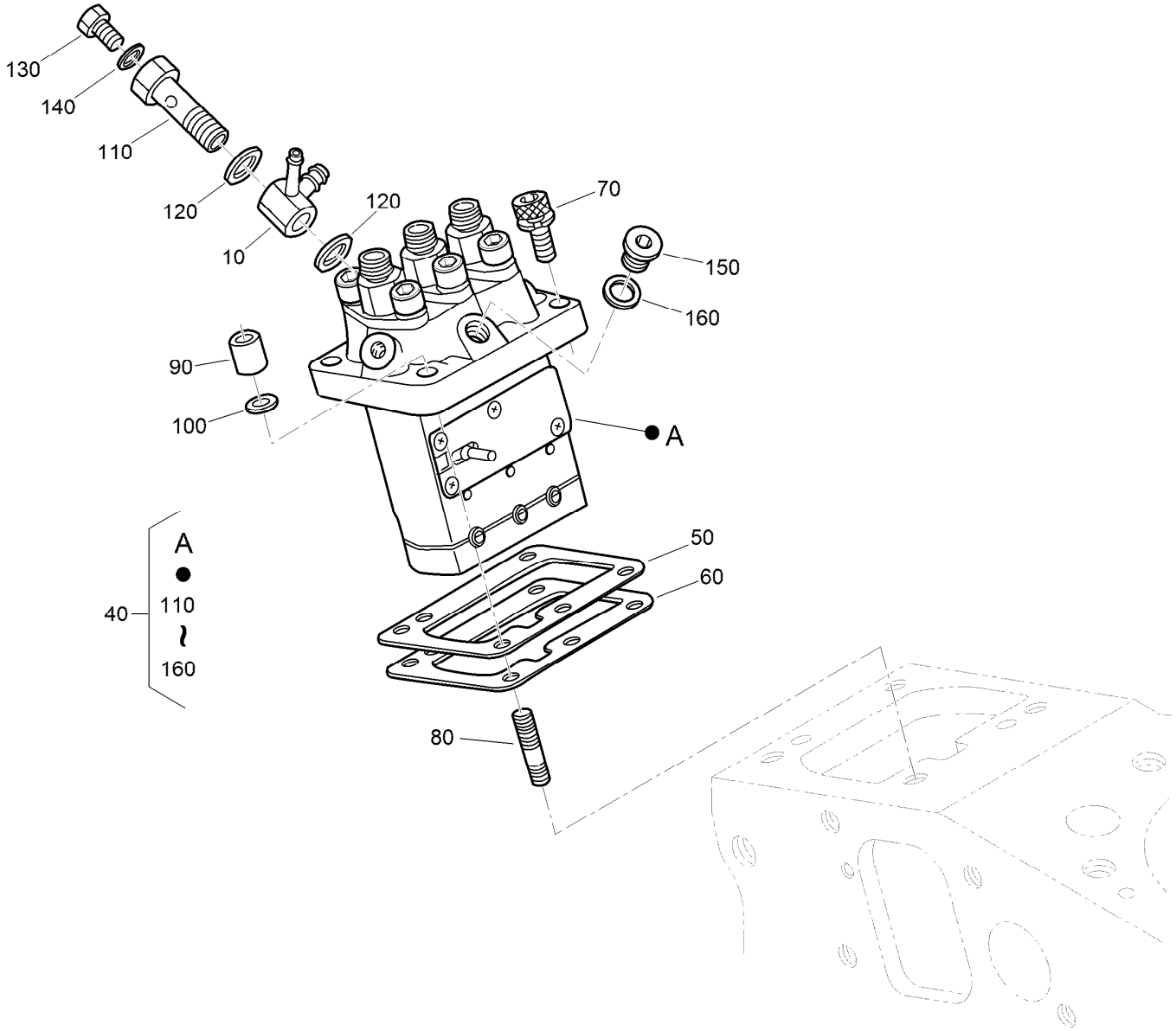


# Injection Pump Assembly

| Ref. | Part Number | Qty. | Description |
|---|---|---|---|
| 10 | 110-3764 | 1 | Joint |
| 40 | 110-3765 | 1 | Injection Pump ASM |
| 50 | 115-3045 | 1 | Shim-Injection (0.175Mm) |
| 50 | 98-9456 | 1 | Shim-Injection (0.20Mm) |
| 50 | 98-9457 | 1 | Shim-Injection (0.25Mm) |
| 60 | 98-9458 | 1 | Shim-Injection (0.30Mm) |
| 60 | 115-3046 | 1 | Shim-Injection (0.35Mm) |
| 70 | 117-7564 | 2 | Bolt-Hex Soc HD |
| 80 | 98-9438 | 2 | Stud |

| Ref. | Part Number | Qty. | Description |
|---|---|---|---|
| 90 | 98-9440 | 2 | Nut-Cap |
| 100 | 98-7699 | 2 | Washer-Spring |
| 110 | 100-1896 | 1 | Screw-Hollow |
| 120 | 98-9445 | 2 | Gasket |
| 130 | 98-9430 | 1 | Screw |
| 140 | 98-9446 | 1 | Gasket |
| 150 | 98-9466 | 1 | Plug |
| 160 | 98-9451 | 1 | Gasket |

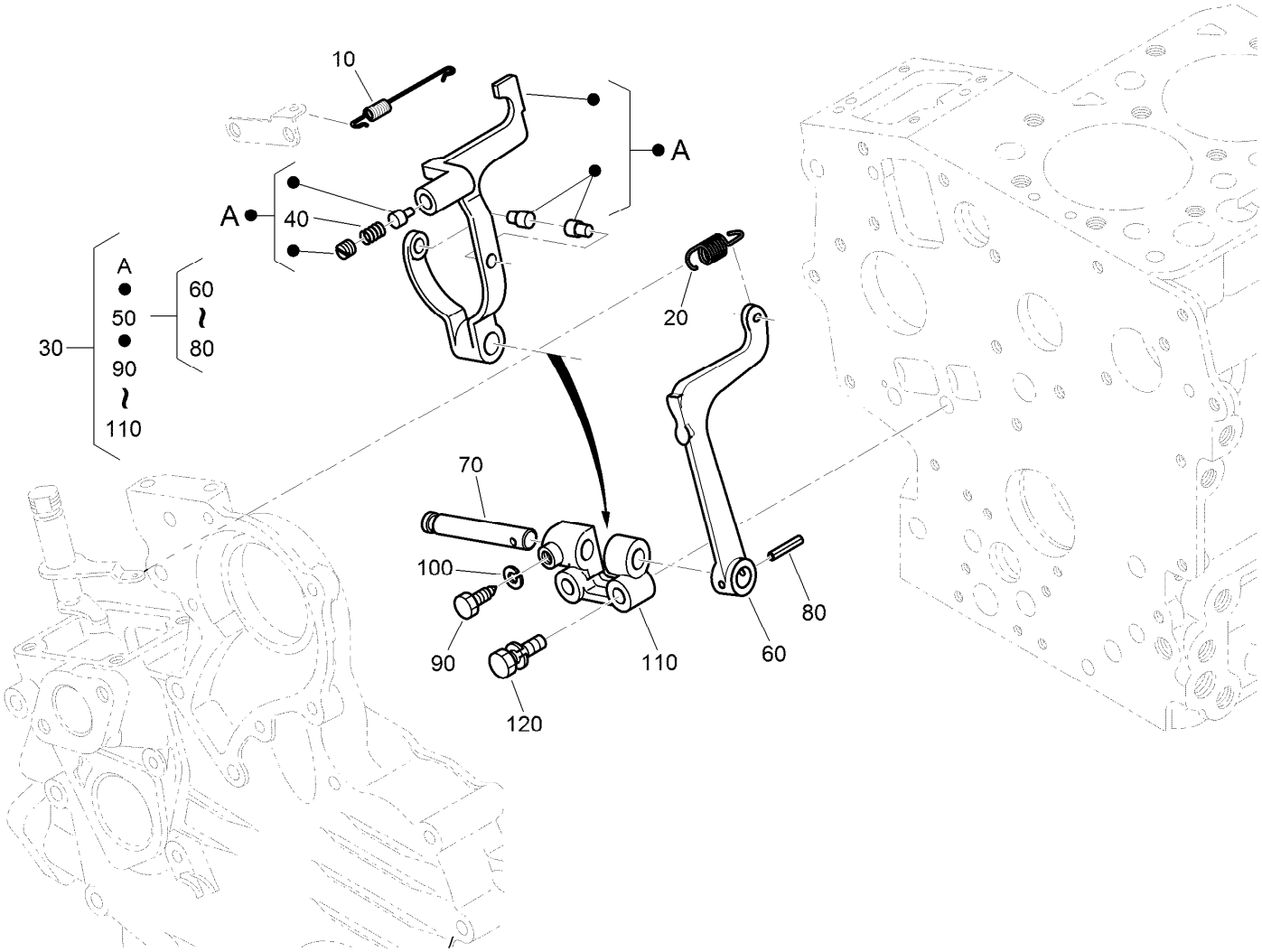


# Governor Assembly

| Ref. | Part Number | Qty. | Description |
|---|---|---|---|
| 10 | 110-3766 | 1 | Spring-Start |
| 20 | 110-3767 | 1 | Spring-Governor |
| 30 | 130-1368 | 1 | Fork Lever ASM |
| 40 | 117-0313 | 1 | Spring |
| 50 | 100-1905 | 1 | Fork Lever ASM |
| 60 | 100-1907 | 1 | Lever-Fork |
| 70 | 100-1908 | 1 | Shaft-Lever, Fork |
| 80 | 100-1751 | 1 | Pin-Spring |
| 90 | 100-1845 | 1 | Bolt |
| 100 | 100-2204 | 1 | Washer-Spring |
| 110 | 100-1909 | 1 | Holder-Lever, Fork |
| 120 | 100-1763 | 2 | Bolt |

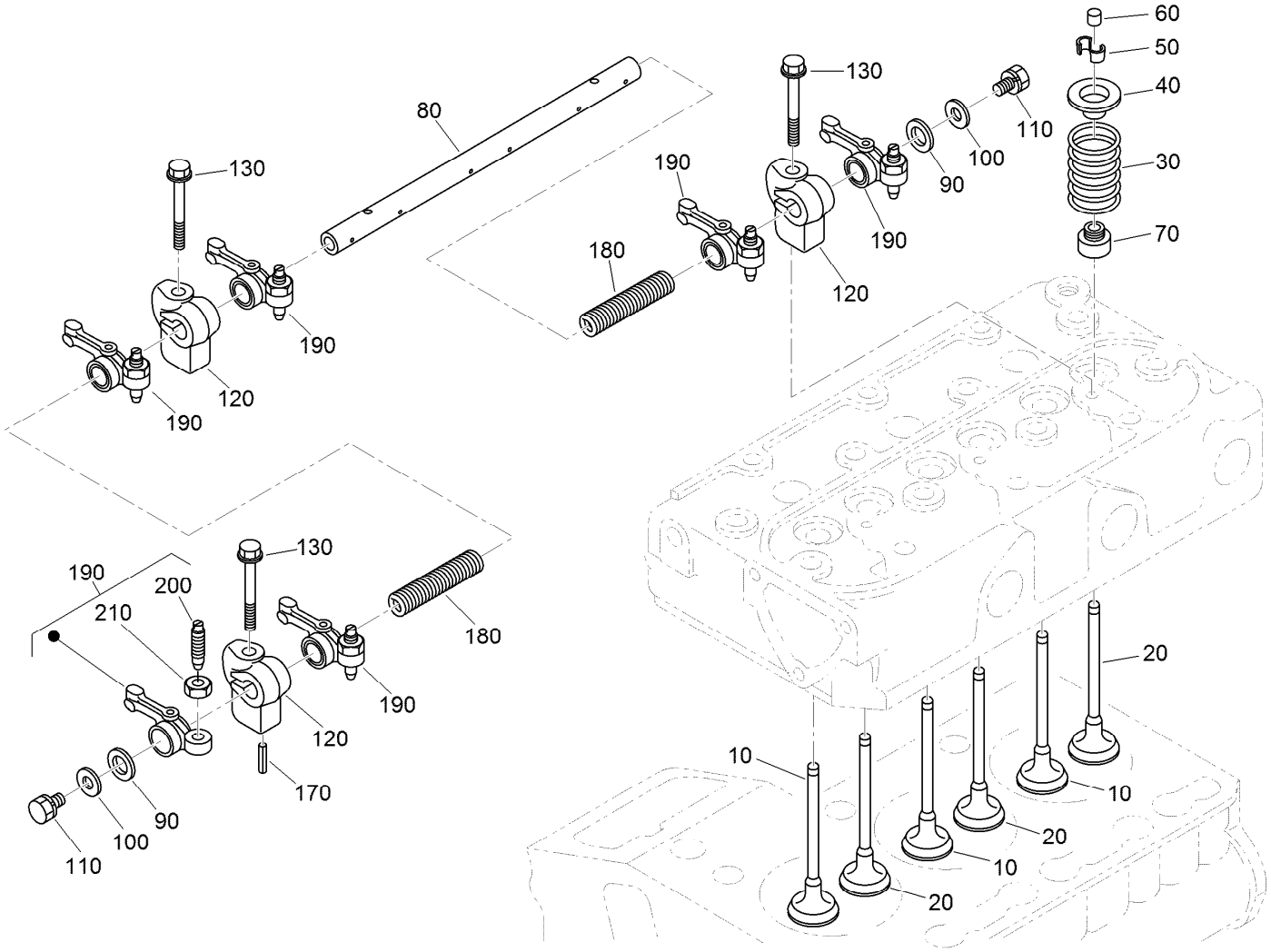


# Valve and Rocker Arm Assembly

| Ref. | Part Number | Qty. | Description |
|---|---|---|---|
| 10 | 112-2514 | 3 | Valve-Inlet |
| 20 | 112-2515 | 3 | Valve-Exhaust |
| 30 | 100-1823 | 6 | Spring-Valve |
| 40 | 100-1825 | 6 | Retainer-Spring, Valve |
| 50 | 120-3136 | 6 | Collet-Spring, Valve |
| 60 | 100-2155 | 6 | Cap-Valve |
| 70 | 100-1797 | 6 | Seal-Stem, Valve |
| 80 | 112-8341 | 1 | Shaft-Arm, Rocker |
| 90 | 100-2044 | 2 | Washer |

| Ref. | Part Number | Qty. | Description |
|---|---|---|---|
| 100 | 110-3832 | 2 | Washer-Plain |
| 110 | 100-1762 | 2 | Bolt |
| 120 | 110-3833 | 3 | Bracket-Arm, Rocker |
| 130 | 110-3834 | 3 | Bolt-Flange |
| 170 | 98-7602 | 1 | Pin-Spring |
| 180 | 112-8342 | 2 | Spring |
| 190 | 100-1884 | 6 | Rocker Arm ASM |
| 200 | 100-1885 | 6 | Screw-Adjusting |
| 210 | 100-1827 | 6 | Nut |

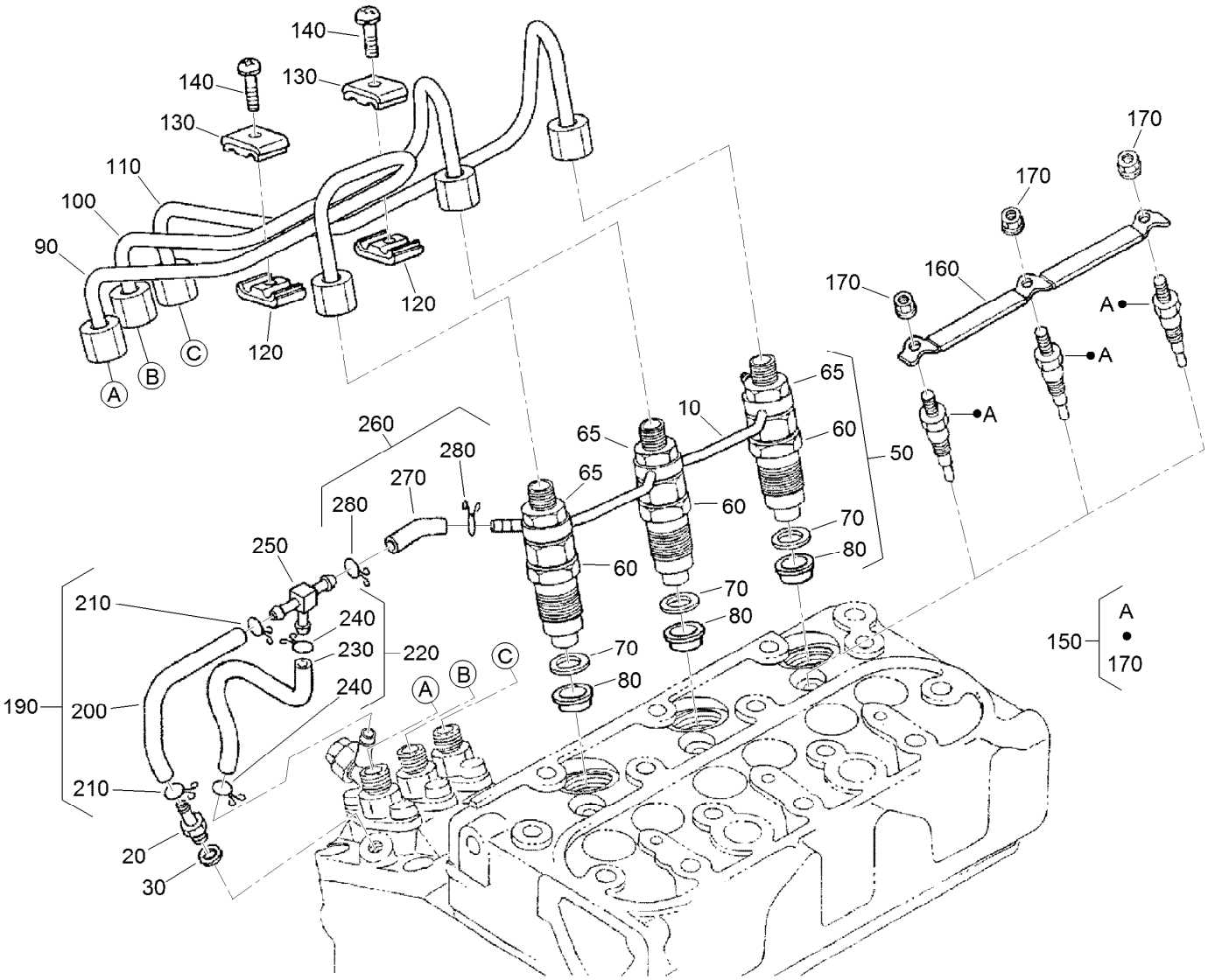


# Nozzle Holder and Glow Plug Assembly

| Ref. | Part Number | Qty. | Description |
|---|---|---|---|
| 10 | 110-3780 | 1 | Over Flow Pipe ASM |
| 20 | 98-9431 | 1 | Screw-Bleeder, Air |
| 30 | 98-7654 | 1 | Gasket |
| 50 | 130-1305 | 3 | Nozzle Holder Kit |
| 60 | 130-1303 | 3 | Nozzle Holder ASM |
| 65 | 121-2411 | 3 | Nut |
| 70 | 98-7676 | 3 | Gasket |
| 80 | 98-7677 | 3 | Seal-Heat |
| 90 | 130-1522 | 1 | Pipe-Injection |
| 100 | 130-1523 | 1 | Pipe-Injection |
| 110 | 130-1541 | 1 | Pipe-Injection |
| 120 | 98-7682 | 2 | Clamp-Pipe |
| 130 | 98-7683 | 2 | Clamp-Pipe |
| 140 | 98-7684 | 2 | Screw (W/Washer) |

| Ref. | Part Number | Qty. | Description |
|---|---|---|---|
| 150 | 130-1411 | 3 | Plug-Glow |
| 160 | 110-3784 | 1 | Cord-Plug, Glow |
| 170 | 99-8377 | 3 | Nut-Flange |
| 190 | 110-3785 | 1 | Fuel Tube ASM |
| 200 | 110-3786 | 1 | Tube-Fuel |
| 210 | 98-7671 | 2 | Clip-Pipe |
| 220 | 110-3787 | 1 | Fuel Tube ASM |
| 230 | 110-3788 | 1 | Tube-Fuel |
| 240 | 98-7671 | 2 | Clip-Pipe |
| 250 | 112-8338 | 1 | Pipe-Joint, T |
| 260 | 110-3790 | 1 | Fuel Tube ASM |
| 270 | 110-3791 | 1 | Tube-Fuel |
| 280 | 98-7671 | 2 | Clip-Pipe |

# Nozzle Holder Assembly

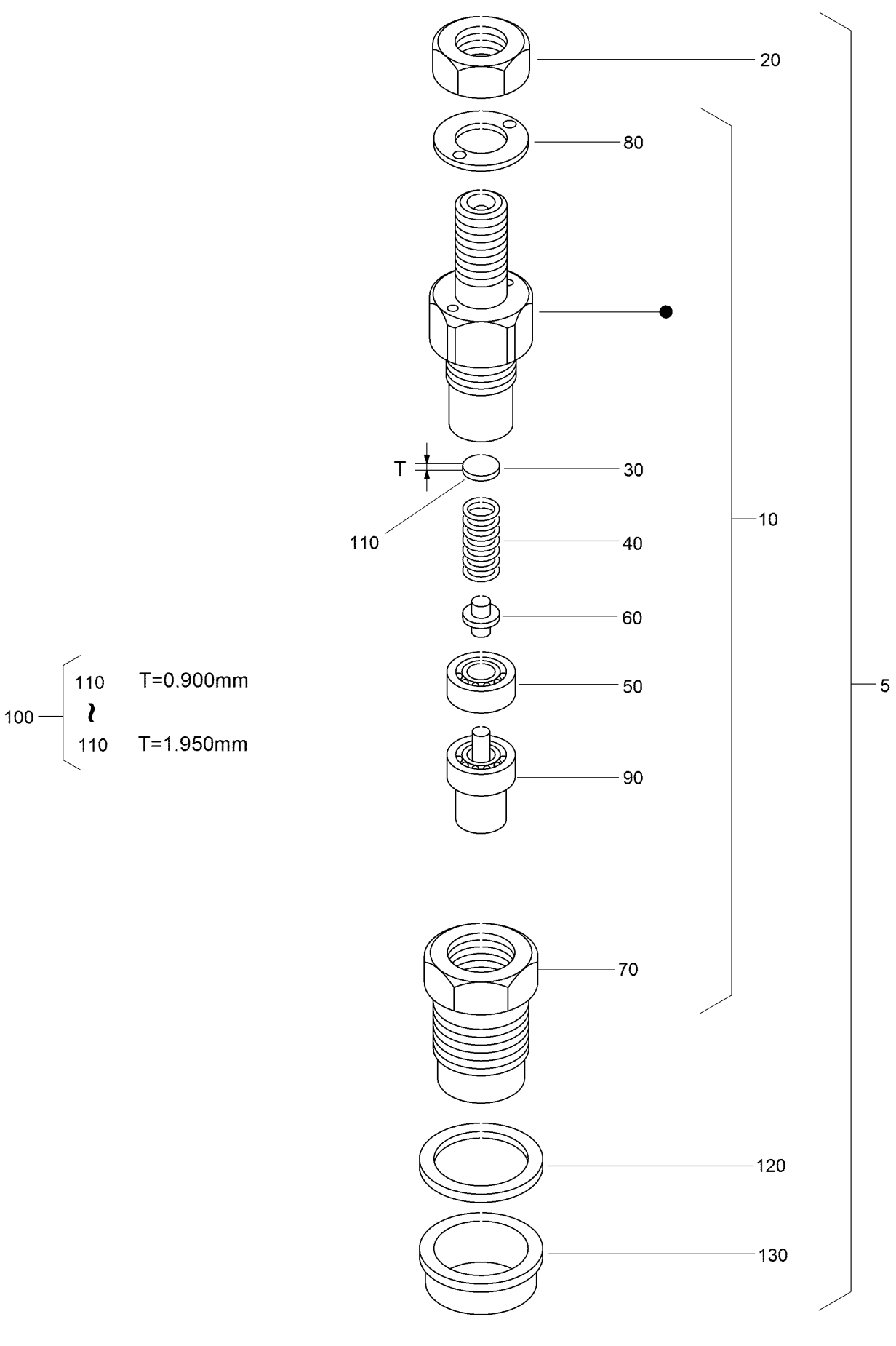

# Nozzle Holder Assembly (continued)

| Ref. | Part Number | Qty. | Description |
|---|---|---|---|
| 5 | 130-1305 | 3 | Nozzle Holder Kit |
| 10 | 130-1303 | 3 | Nozzle Holder ASM |
| 20 | 121-2411 | 3 | Nut |
| 30 | 99-8302 | 3 | Washer-Adjusting |
| 40 | 99-8303 | 3 | Spring-Nozzle |
| 50 | 99-8304 | 3 | Spacer-Distance |
| 60 | 99-8305 | 3 | Rod-Push |
| 70 | 130-1304 | 3 | Nut-Nozzle |
| 80 | 99-8307 | 3 | Washer-Plain |
| 90 | 130-1497 | 3 | Nozzle-Piece |
| 100 | 98-9448 | 3 | Adjusting Washer ASM |
| 110 | 98-7642 | 3 | Washer-Adjusting (0.900Mm) |
| 110 | 98-7841 | 3 | Washer-Adjusting (0.925Mm) |
| 110 | 98-7842 | 3 | Washer-Adjusting (0.950Mm) |
| 110 | 98-7843 | 3 | Washer-Adjusting (0.975Mm) |
| 110 | 98-7844 | 3 | Washer-Adjusting (1.000Mm) |
| 110 | 98-7845 | 3 | Washer-Adjusting (1.025Mm) |
| 110 | 98-7846 | 3 | Washer-Adjusting (1.050Mm) |
| 110 | 98-7847 | 3 | Washer-Adjusting (1.075Mm) |
| 110 | 98-7848 | 3 | Washer-Adjusting (1.100Mm) |
| 110 | 98-7849 | 3 | Washer-Adjusting (1.125Mm) |
| 110 | 98-7850 | 3 | Washer-Adjusting (1.150Mm) |
| 110 | 98-7851 | 3 | Washer-Adjusting (1.175Mm) |
| 110 | 98-7852 | 3 | Washer-Adjusting (1.200Mm) |
| 110 | 98-7853 | 3 | Washer-Adjusting (1.225Mm) |
| 110 | 98-7854 | 3 | Washer-Adjusting (1.250Mm) |
| 110 | 98-7855 | 3 | Washer-Adjusting (1.275Mm) |
| 110 | 98-7856 | 3 | Washer-Adjusting 1.300Mm) |
| 110 | 98-7857 | 3 | Washer-Adjusting (1.325Mm) |
| 110 | 98-7858 | 3 | Washer-Adjusting (1.350Mm) |
| 110 | 98-7859 | 3 | Washer-Adjusting (1.375Mm) |
| 110 | 98-7860 | 3 | Washer-Adjusting (1.400Mm) |
| 110 | 98-7861 | 3 | Washer-Adjusting (1.425Mm) |
| 110 | 98-7862 | 3 | Washer-Adjusting (1.450Mm) |
| 110 | 98-7863 | 3 | Washer-Adjusting (1.475Mm) |
| 110 | 98-7864 | 3 | Washer-Adjusting (1.500Mm) |
| 110 | 98-7865 | 3 | Washer-Adjusting (1.525Mm) |
| 110 | 98-7866 | 3 | Washer-Adjusting (1.550Mm) |
| 110 | 98-7867 | 3 | Washer-Adjusting (1.575Mm) |
| 110 | 98-7868 | 3 | Washer-Adjusting (1.600Mm) |
| 110 | 98-7869 | 3 | Washer-Adjusting (1.625Mm) |
| 110 | 98-7870 | 3 | Washer-Adjusting (1.650Mm) |
| 110 | 98-7871 | 3 | Washer-Adjusting (1.675Mm) |
| 110 | 98-7872 | 3 | Washer-Adjusting (1.700Mm) |
| 110 | 98-7873 | 3 | Washer-Adjusting (1.725Mm) |
| 110 | 98-7874 | 3 | Washer-Adjusting (1.750Mm) |
| 110 | 98-7875 | 3 | Washer-Adjusting (1.775Mm) |
| 110 | 98-7876 | 3 | Washer-Adjusting (1.800Mm) |
| 110 | 98-7877 | 3 | Washer-Adjusting (1.825Mm) |
| 110 | 98-7878 | 3 | Washer-Adjusting (1.850Mm) |
| 110 | 98-7879 | 3 | Washer-Adjusting (1.875Mm) |
| 110 | 98-7880 | 3 | Washer-Adjusting (1.900Mm) |
| 110 | 98-7881 | 3 | Washer-Adjusting (1.925Mm) |
| 110 | 98-7882 | 3 | Washer-Adjusting (1.950Mm) |
| 120 | 98-7676 | 3 | Gasket |
| 130 | 98-7677 | 3 | Seal-Heat |

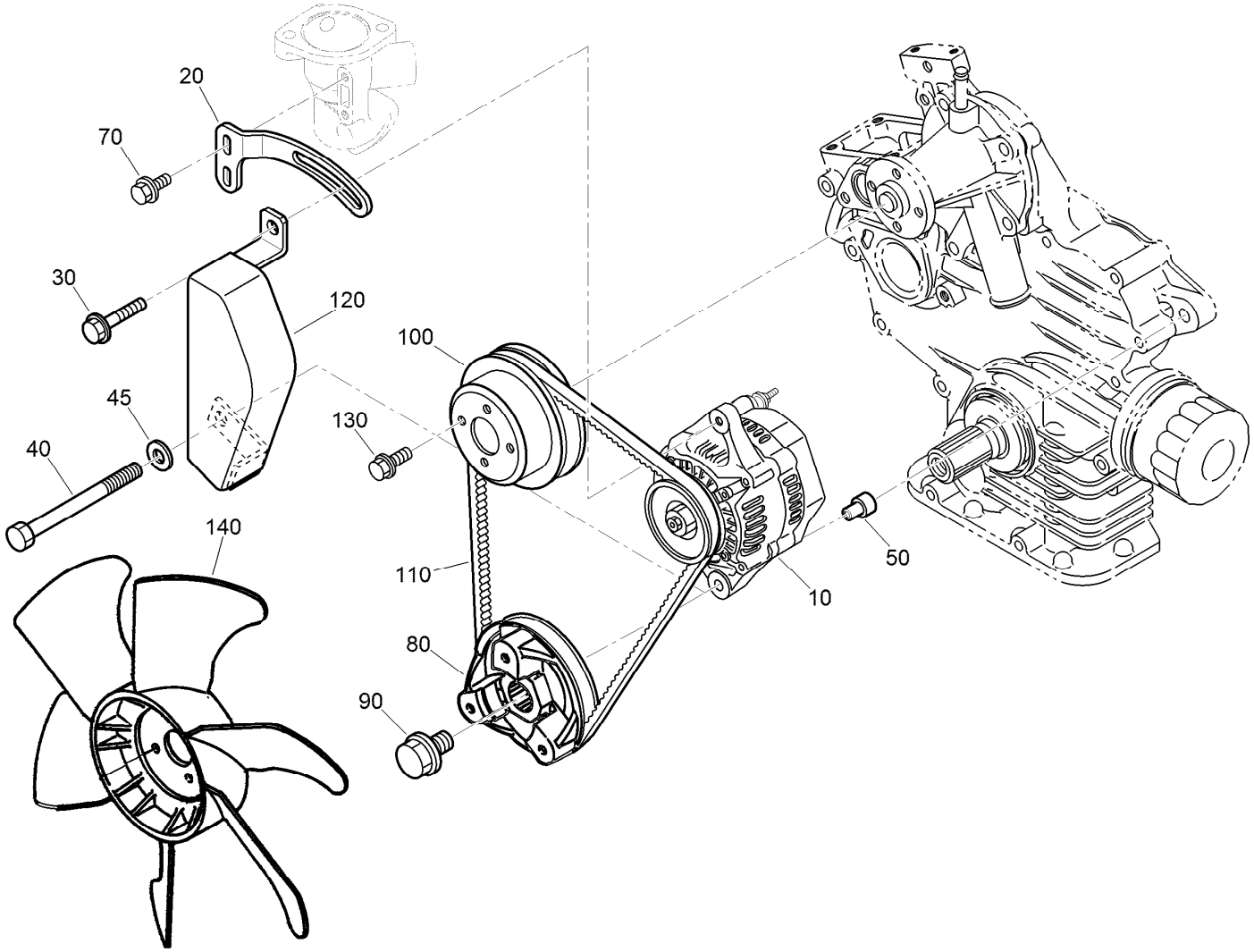


# Alternator, Pulley and Fan Assembly

| Ref. | Part Number | Qty. | Description |
|---|---|---|---|
| 10 | 98-9474 | 1 | Alternator ASM |
| 20 | 110-3792 | 1 | Stay-Alternator |
| 30 | 121-3800 | 1 | Bolt-Sems |
| 40 | 98-7556 | 1 | Bolt |
| 45 | 120-5832 | 1 | Washer-Plain |
| 50 | 110-3794 | 1 | Collar |
| 70 | 98-7692 | 2 | Bolt |
| 80 | 130-1487 | 1 | Pulley-Drive, Fan |
| 90 | 100-1978 | 1 | Bolt |
| 100 | 100-1921 | 1 | Pulley-Fan |
| 110 | 112-2511 | 1 | Belt |
| 120 | 110-3797 | 1 | Cover |
| 130 | 99-8363 | 4 | Bolt-Flange |
| 140 | 112-2513 | 1 | Fan |

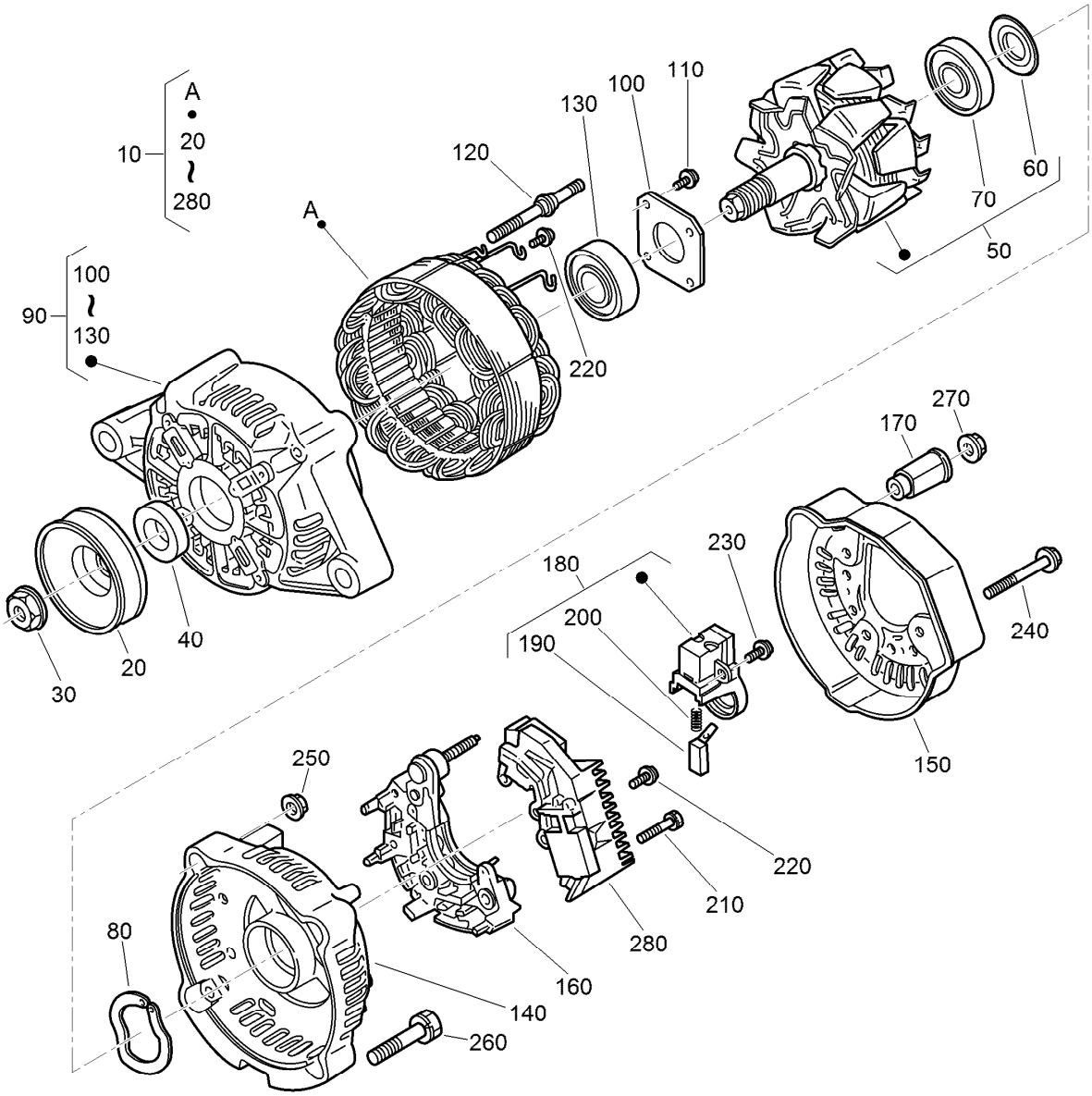


# Alternator Components Assembly

| Ref. | Part Number | Qty. | Description |
|---|---|---|---|
| 10 | 98-9474 | 1 | Alternator ASM |
| 20 | 98-9453 | 1 | Pulley-Dynamo |
| 30 | 98-7708 | 1 | Nut |
| 40 | 98-7709 | 1 | Collar |
| 50 | 107-0136 | 1 | Rotor ASM |
| 60 | 98-7711 | 1 | Cover-Bearing |
| 70 | 107-0138 | 1 | Bearing-Ball |
| 80 | 98-7713 | 1 | Washer-Thrust |
| 90 | 107-0139 | 1 | Drive End Frame ASM |
| 100 | 98-7715 | 1 | Plate-Retainer |
| 110 | 98-7716 | 4 | Screw-Head, Round |
| 120 | 98-7717 | 2 | Bolt-Through |
| 130 | 107-0137 | 1 | Bearing-Ball |
| 140 | 107-9087 | 1 | Frame-End |

| Ref. | Part Number | Qty. | Description |
|---|---|---|---|
| 150 | 107-0140 | 1 | Cover-End |
| 160 | 127-1612 | 1 | Rectifier ASM |
| 170 | 98-7722 | 1 | Bushing-Insulation |
| 180 | 107-0141 | 1 | Brush Holder ASM |
| 190 | 98-7724 | 2 | Brush |
| 200 | 98-7725 | 2 | Spring-Brush |
| 210 | 98-7726 | 2 | Screw-Head, Round |
| 220 | 98-7727 | 6 | Screw-Head, Round |
| 230 | 98-7728 | 1 | Screw-Head, Round |
| 240 | 98-7729 | 3 | Bolt |
| 250 | 98-7730 | 2 | Nut |
| 260 | 98-7731 | 2 | Bolt |
| 270 | 98-7732 | 1 | Nut |
| 280 | 110-3799 | 1 | Regulator ASM |

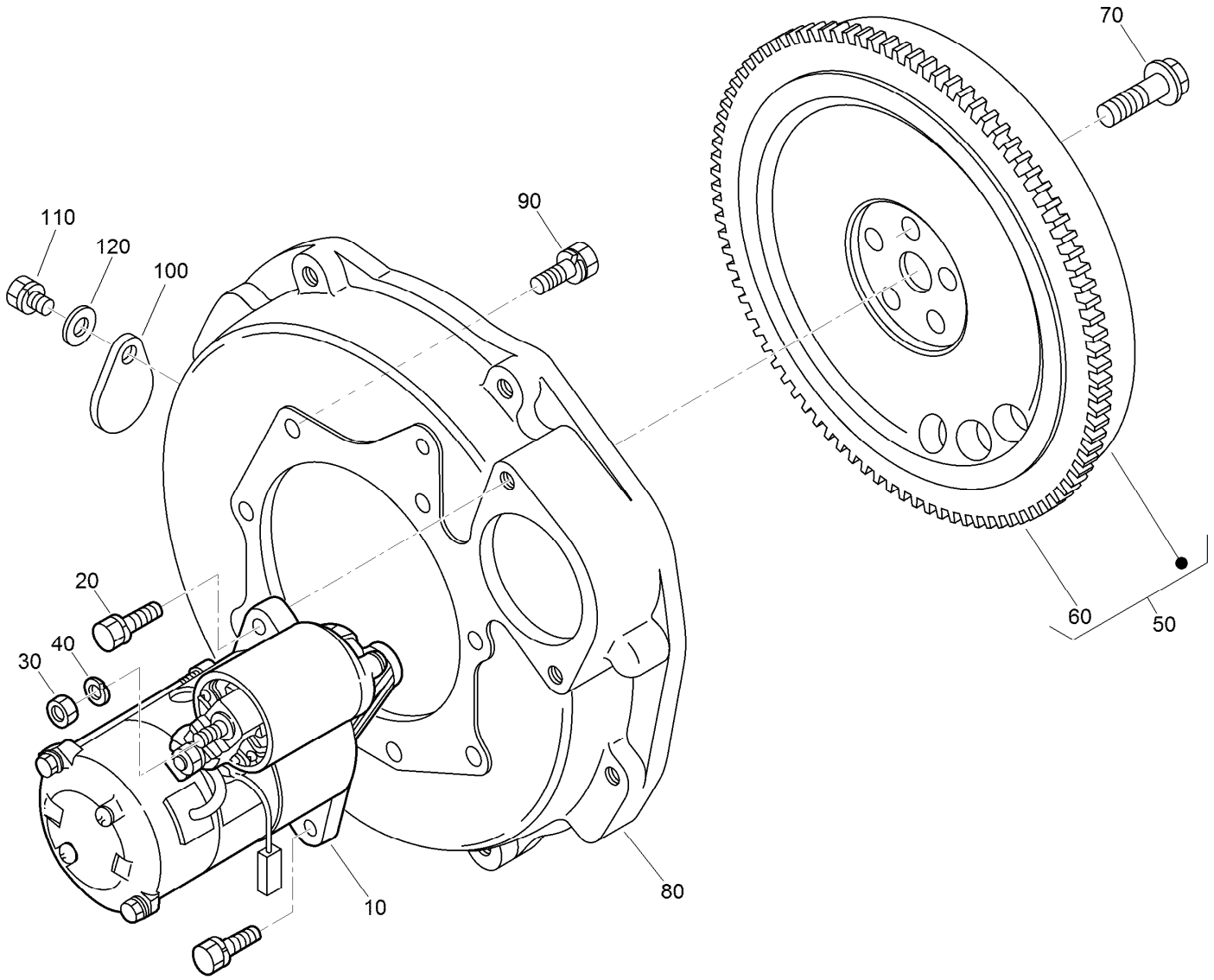


# Starter and Flywheel Assembly

| *Ref.* | *Part Number* | *Qty.* | *Description* |
|---|---|---|---|
| 10 | 100-2179 | 1 | Starter ASM |
| 20 | 98-7438 | 2 | Bolt |
| 30 | 98-7534 | 1 | Nut |
| 40 | 105-2893 | 1 | Washer-Spring |
| 50 | 130-1496 | 1 | Flywheel ASM |
| 60 | 127-1604 | 1 | Gear-Ring |
| 70 | 100-1930 | 5 | Bolt-Flywheel |
| 80 | 117-1703 | 1 | Housing-Flywheel |
| 90 | 98-9359 | 8 | Bolt |
| 100 | 100-2177 | 1 | Cover |
| 110 | 100-9195 | 1 | Bolt |
| 120 | 120-5832 | 1 | Washer-Plain |

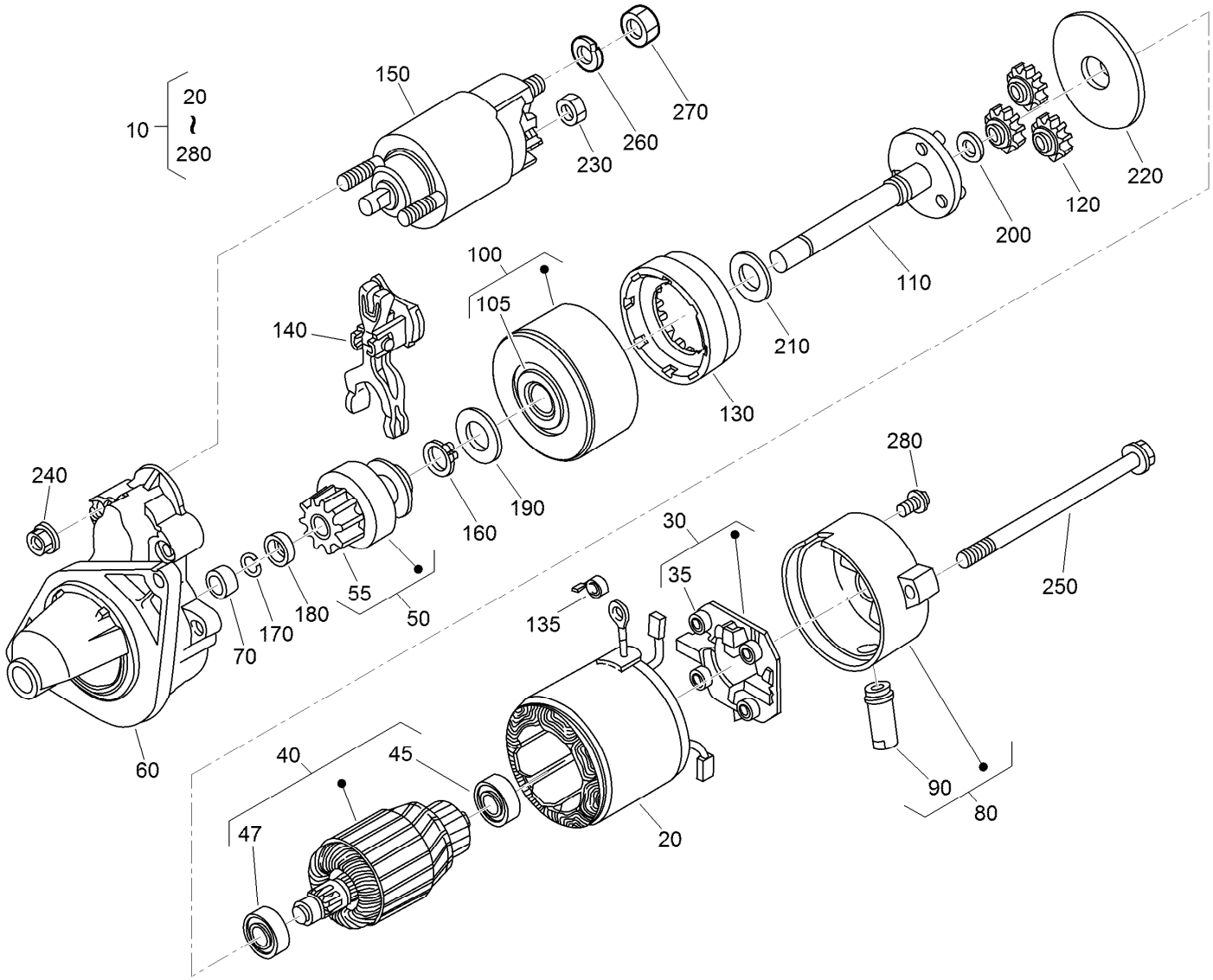


# Starter Component Assembly

| Ref. | Part Number | Qty. | Description |
|---|---|---|---|
| 10 | 100-2179 | 1 | Starter ASM |
| 20 | 100-2181 | 1 | Starter Yoke ASM |
| 30 | 100-2222 | 1 | Holder ASM |
| 35 | 127-0415 | 4 | Spring-Brush |
| 40 | 100-2182 | 1 | Armature ASM |
| 45 | 98-9412 | 1 | Bearing-Ball |
| 47 | 98-9411 | 1 | Bearing-Ball |
| 50 | 100-2185 | 1 | Starter Clutch ASM |
| 55 | 112-2833 | 1 | Gear-Pinion |
| 60 | 100-2180 | 1 | Starter Housing ASM |
| 70 | 100-2183 | 1 | Bearing |
| 80 | 100-2186 | 1 | Frame ASM |
| 90 | 100-2213 | 1 | Cover |
| 100 | 100-2223 | 1 | Bearing ASM |
| 105 | 127-0414 | 1 | Bearing |
| 110 | 100-2187 | 1 | Starter Shaft ASM |
| 120 | 100-2220 | 3 | Gear |

| Ref. | Part Number | Qty. | Description |
|---|---|---|---|
| 130 | 100-2221 | 1 | Gear |
| 135 | 98-7750 | 4 | Spring-Brush |
| 140 | 100-2218 | 1 | Lever |
| 150 | 100-2211 | 1 | Magnetic Switch ASM |
| 160 | 100-2219 | 1 | Ring-Snap |
| 170 | 100-2212 | 1 | Ring-Snap |
| 180 | 100-2216 | 1 | Collar |
| 190 | 100-2224 | 1 | Washer-Plain |
| 200 | 100-2225 | 1 | Washer-Plain |
| 210 | 100-2226 | 1 | Washer-Plain |
| 220 | 100-2227 | 1 | Plate |
| 230 | 99-8371 | 1 | Nut-Hex |
| 240 | 100-1813 | 2 | Nut |
| 250 | 100-2210 | 2 | Bolt-Through |
| 260 | 100-2215 | 1 | Washer-Spring |
| 270 | 100-2171 | 1 | Nut-Hex |
| 280 | 100-2188 | 2 | Screw |

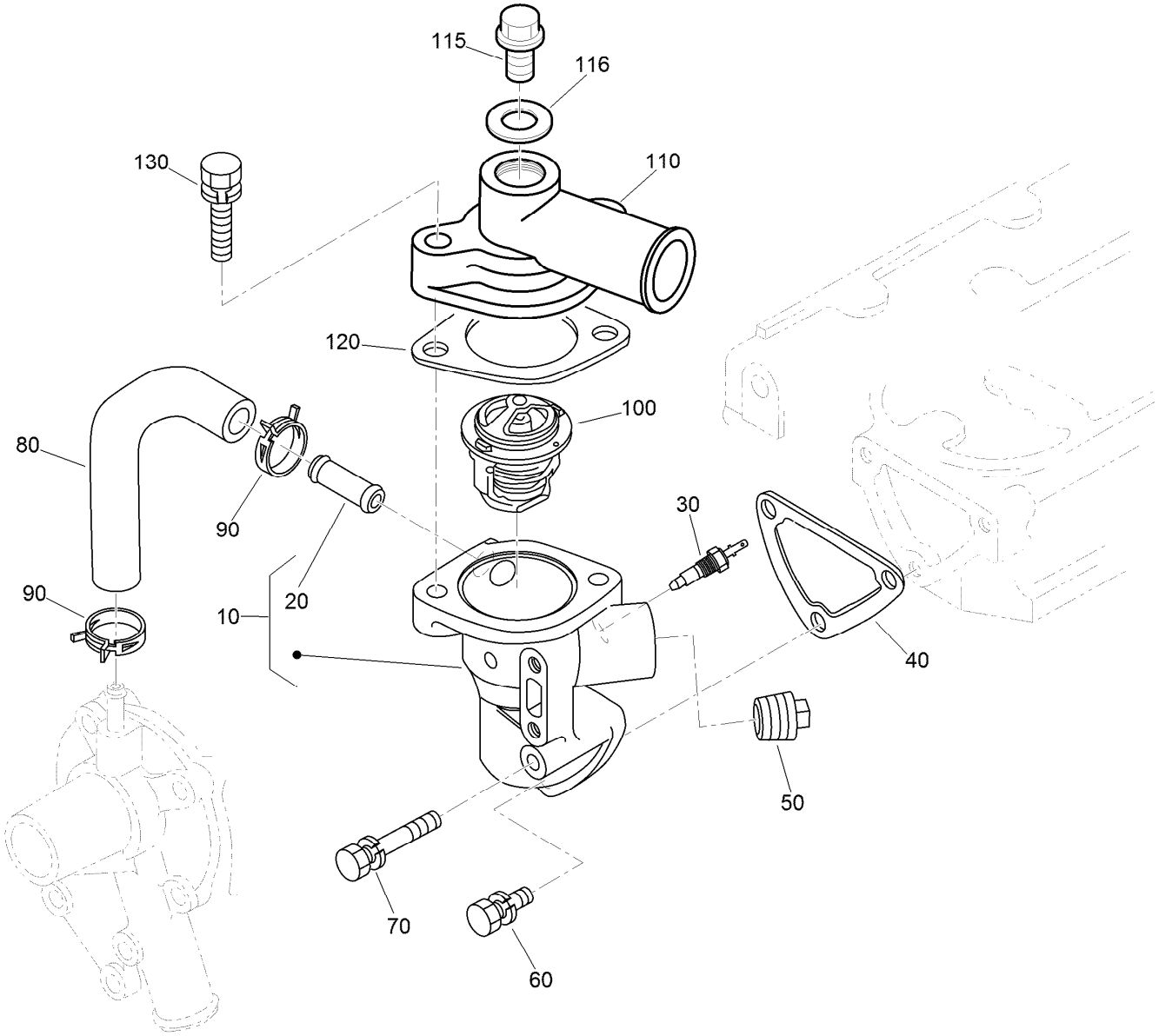


# Water Flange and Thermostat Assembly

| Ref. | Part Number | Qty. | Description |
|---|---|---|---|
| 10 | 110-3819 | 1 | Water Flange ASM |
| 20 | 98-9580 | 1 | Pipe-Return, Water |
| 30 | 99-3582 | 1 | Thermoswitch |
| 40 | 110-3820 | 1 | Gasket-Flange, Water |
| 50 | 110-3821 | 1 | Plug |
| 60 | 98-7692 | 2 | Bolt |
| 70 | 125-9063 | 1 | Bolt-Sems |
| 80 | 110-3822 | 1 | Pipe-Return, Water |
| 90 | 125-9078 | 2 | Clamp-Hose |
| 100 | 98-7778 | 1 | Thermostat ASM |
| 110 | 112-2512 | 1 | Cover-Thermostat |
| 115 | 105-3747 | 1 | Plug |
| 116 | 99-3583 | 1 | Gasket |
| 120 | 105-3748 | 1 | Gasket-Thermostat |
| 130 | 98-7777 | 2 | Bolt |

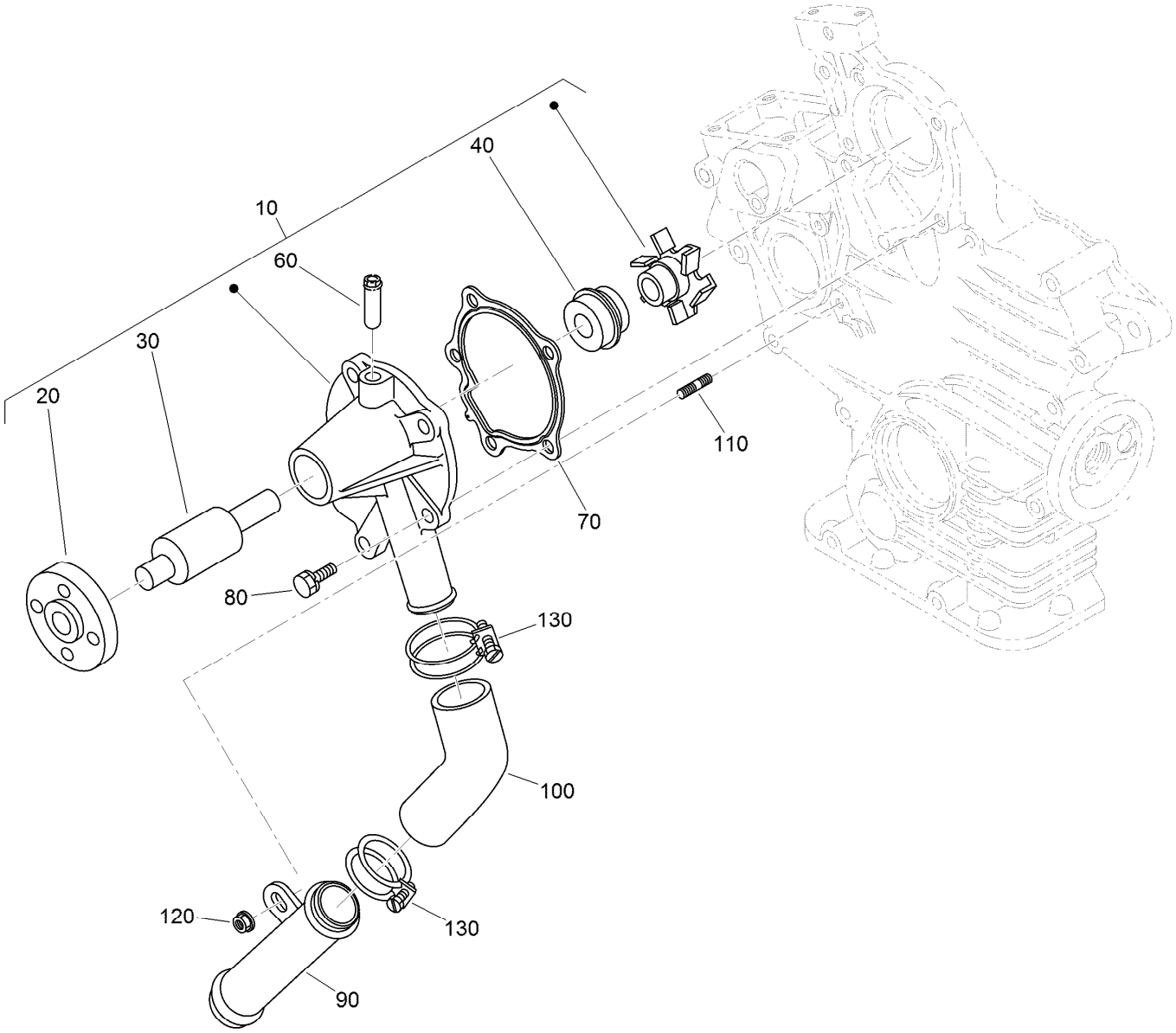


# Water Pump and Water Pipe Assembly

| Ref. | Part Number | Qty. | Description |
|---|---|---|---|
| 10 | 110-3824 | 1 | Water Pump ASM |
| 20 | 125-9081 | 1 | Flange-Pump, Water |
| 30 | 100-1934 | 1 | Bearing-Ball |
| 40 | 99-3518 | 1 | Water Pump Seal ASM |
| 60 | 100-1932 | 1 | Pipe-Return, Water |
| 70 | 117-0330 | 1 | Gasket-Pump, Water |
| 80 | 100-1750 | 4 | Bolt |
| 90 | 100-1918 | 1 | Pipe-Water |
| 100 | 110-3827 | 1 | Pipe-Water |
| 110 | 100-1924 | 1 | Stud |
| 120 | 100-2203 | 1 | Nut-Flange |
| 130 | 110-3828 | 2 | Band-Pipe |

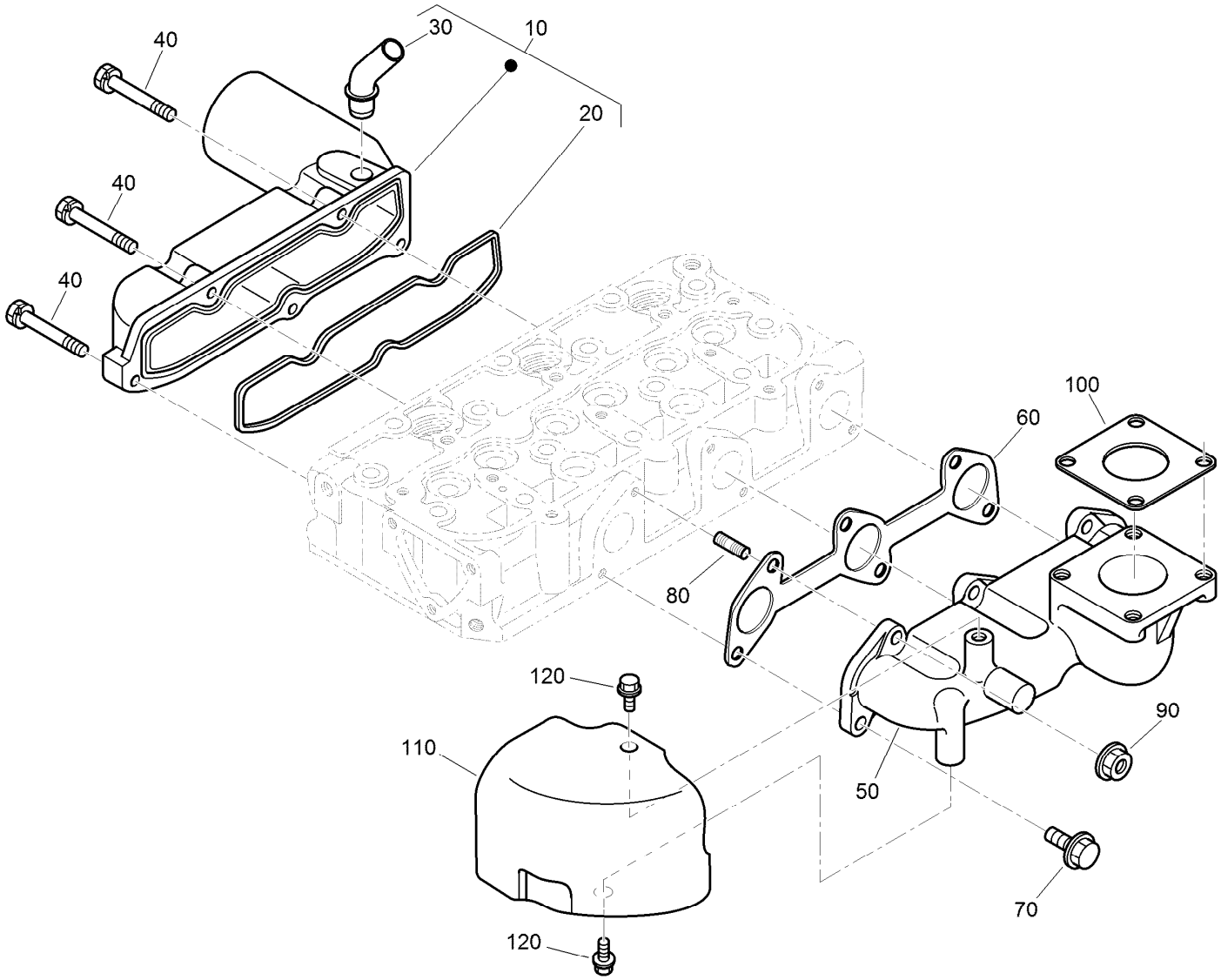


# Inlet and Exhaust Manifold Assembly

| *Ref.* | *Part Number* | *Qty.* | *Description* |
|---|---|---|---|
| 10 | 120-3141 | 1 | Intake Manifold ASM |
| 20 | 110-3838 | 1 | Gasket-Manifold, Intake |
| 30 | 121-2417 | 1 | Pipe-Breather |
| 40 | 98-9352 | 5 | Bolt |
| 50 | 112-2516 | 1 | Manifold-Exhaust |
| 60 | 110-3840 | 1 | Gasket-Manifold, Exhaust |
| 70 | 130-1514 | 3 | Bolt-Ubs |
| 80 | 130-1156 | 3 | Bolt-Stud |
| 90 | 100-1778 | 3 | Nut |
| 100 | 99-8343 | 1 | Gasket-Muffler |
| 110 | 112-2517 | 1 | Cover-Heat |
| 120 | 130-1173 | 2 | Screw-Flange HD |

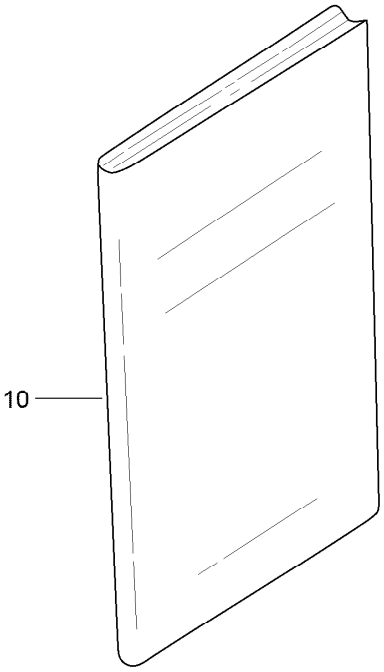


# Miscellaneous Engine Parts

| *Ref.* | *Part Number* | *Qty.* | *Description* |
|---|---|---|---|
| 10 | 130-1513 | 1 | Manual-Operator |

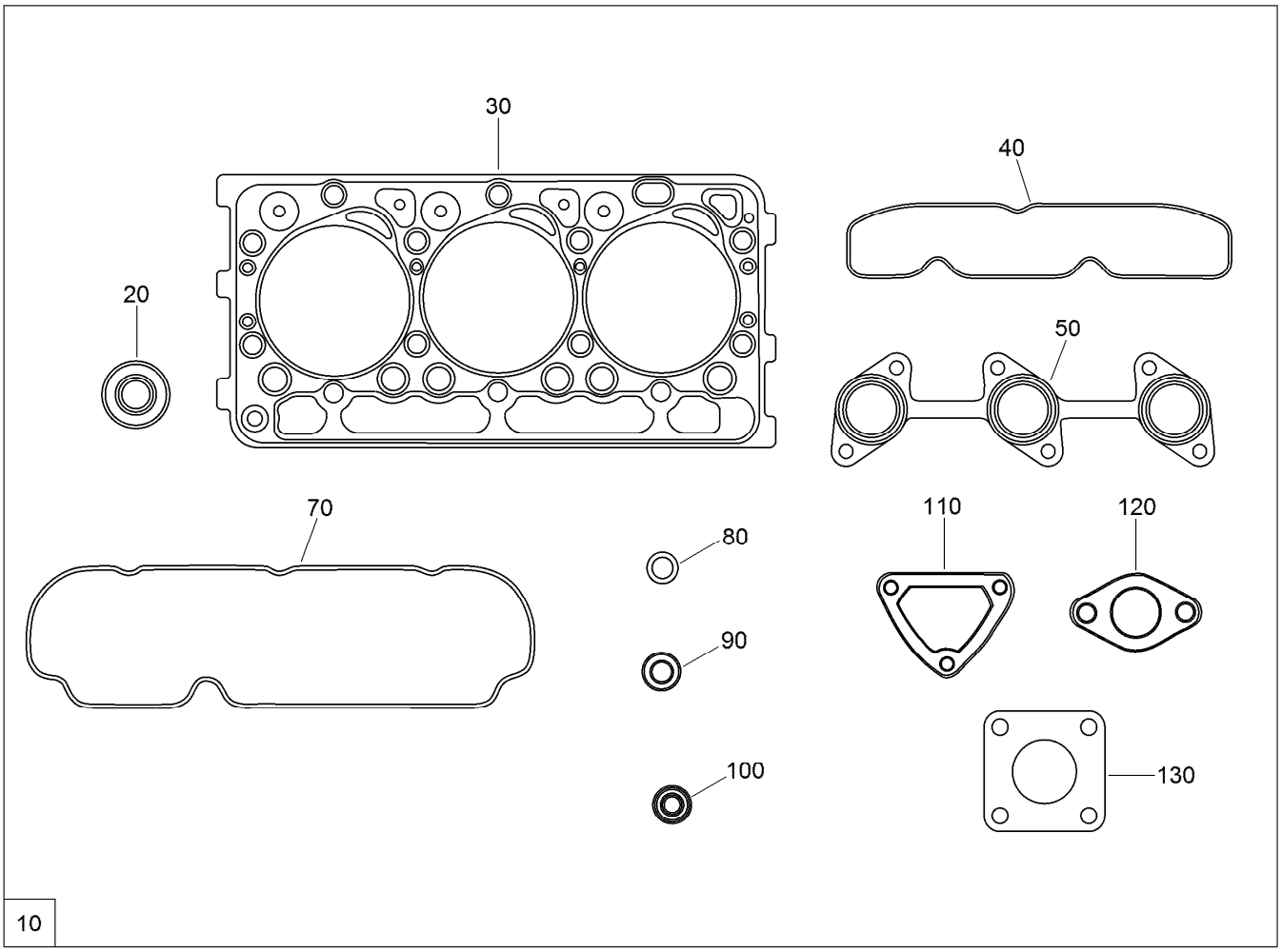


# Upper Engine Gasket Kit

| *Ref.* | *Part Number* | *Qty.* | *Description* |
|---|---|---|---|
| 10 | 130-1441 | 1 | Upper Gasket Kit |
| 20 | 100-1797 | 6 | Seal-Stem, Valve |
| 30 | 112-2520 | 1 | Gasket-Head, Cylinder |
| 40 | 110-3838 | 1 | Gasket-Manifold, Intake |
| 50 | 110-3840 | 1 | Gasket-Manifold, Exhaust |
| 70 | 112-2521 | 1 | Gasket-Cover, Head |
| 80 | 99-3446 | 1 | O-Ring |
| 90 | 98-7676 | 3 | Gasket |
| 100 | 98-7677 | 3 | Seal-Heat |
| 110 | 110-3820 | 1 | Gasket-Flange, Water |
| 120 | 105-3748 | 1 | Gasket-Thermostat |
| 130 | 99-8343 | 1 | Gasket-Muffler |

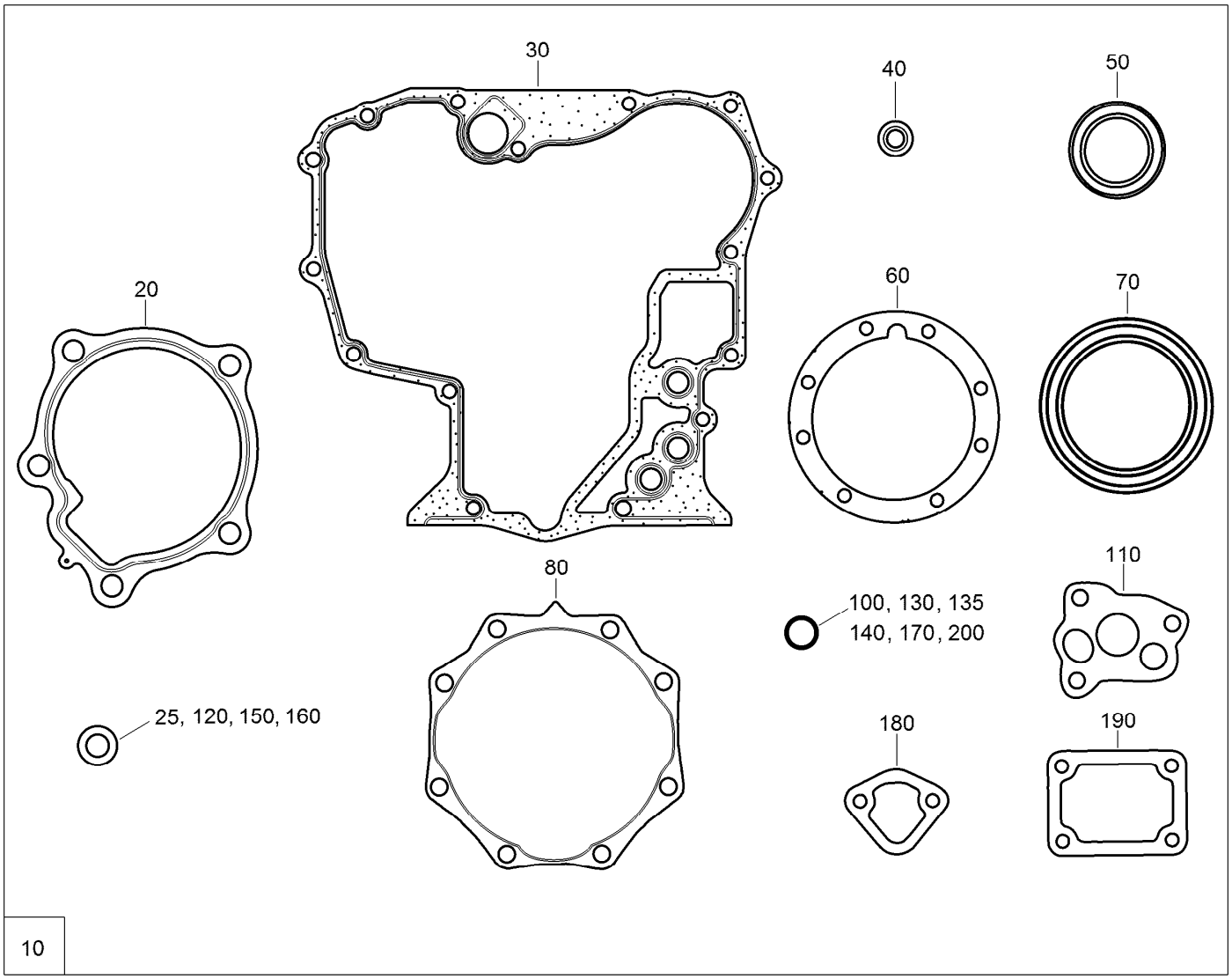


# Lower Engine Gasket Kit

| Ref. | Part Number | Qty. | Description |
|---|---|---|---|
| 10 | 117-1706 | 1 | Lower Gasket Kit |
| 20 | 117-0330 | 1 | Gasket-Pump, Water |
| 25 | 98-7524 | 1 | Gasket |
| 30 | 117-0327 | 1 | Gasket-Case, Gear |
| 40 | 112-8325 | 1 | Washer |
| 50 | 120-7852 | 1 | Seal-Oil |
| 60 | 112-2812 | 1 | Gasket-Case, Bearing |
| 70 | 110-3724 | 1 | Seal-Oil |
| 80 | 100-1876 | 1 | Gasket-Cover, Case |
| 100 | 100-2209 | 1 | O-Ring |
| 110 | 100-2003 | 1 | Gasket-Pump, Oil |

| Ref. | Part Number | Qty. | Description |
|---|---|---|---|
| 120 | 98-7654 | 1 | Gasket |
| 130 | 105-3776 | 1 | O-Ring |
| 135 | 98-9722 | 1 | O-Ring |
| 140 | 100-2207 | 1 | O-Ring |
| 150 | 98-7654 | 2 | Gasket |
| 160 | 110-9715 | 1 | Gasket-Pan, Oil |
| 170 | 100-2208 | 1 | O-Ring |
| 180 | 98-9636 | 1 | Gasket-Pump, Fuel |
| 190 | 100-1962 | 1 | Gasket-Plate, Control |
| 200 | 110-3762 | 1 | O-Ring |

# Attachments and Accessories

## For 22323G TX 525 Compact Utility Loader

| Product Name | Model/Part |
|---|---|
| Light Kit | 100-8840 |
| Track Kit | 104-6106 |
| Road Wheel Kit | 106-7620 |
| Reference Guide Kit | 107-9310 |
| Track-Aggressive Tread | 108-5640 |
| 4 Cubic Foot Standard Bucket | 22409 |
| Loose Materials Bucket | 22410 |
| 48in Hydraulic Blade | 22414 |
| Rotary Broom | 22415 |
| Bore Drive Head | 22420 |
| Rod And Reamer | 22421 |
| Multi-Purpose Tool | 22423 |
| Power Box Rake | 22425 |
| Stump Grinder | 22429 |
| Tree Forks | 22438 |
| Cement Bowl | 22442 |
| 40in Tiller | 22445 |
| Snowthrower | 22456 |
| Crumber Kit | 22464 |
| Trencher Head | 22470 |
| High-Speed Trencher Head | 22471 |
| Trench Filler | 22472 |
| TX Platform | 22476 |
| Narrow Bucket | 22520 |
| Grapple Rake | 22521 |
| Auger Head | 22805 |
| Universal Swivel Auger Head | 22806 |
| 6in Auger Bit | 22810 |
| 9in Auger Bit | 22811 |
| 12in Auger Bit | 22812 |
| 15in Auger Bit | 22813 |
| 18in Auger Bit | 22814 |
| 24in Auger Bit | 22815 |
| 30in Auger Bit | 22816 |
| 12in Auger Bit Extension | 22818 |
| 24in Auger Bit Extension | 22819 |
| Vibratory Plow | 22911 |
| Soil Cultivator | 23101 |
| Concrete Breaker | 23135 |
| TX Fit Up Kit | 23162 |
| Backhoe | 23163 |
| Adjustable Forks | 23164 |
| Leveler | 23165 |
| Spark Arrestor Screen | 75-6880 |

**Notes:**

TORO®

Count on it.