FORM NO. 3320-476

TORO

MODEL NO. 20626C-7900001 & UP
MODEL NO. 20629C-7900001 & UP

OPERATOR'S MANUAL

21" (0.53 m) REAR BAGGER

FINGERTIP START & KEY-LECTRIC® START

ONLY COPY
DO NOT REMOVE
Parts Dept.

⚠ SAFETY INSTRUCTIONS

BEFORE OPERATING

1. Read this manual carefully before operating the mower. Become familiar with the controls and proper use of the mower. Never allow children to operate the mower or adults to operate it without proper instructions.

2. Keep everyone, especially children and pets, away from the area of operation. Thoroughly inspect area where mower will be used and remove sticks, stones, wire and debris.

3. Wear long pants and substantial shoes. Do not operate mower while wearing open sandals or when barefoot.

4. Check fuel level before starting engine. Do not fill fuel tank indoors, when the engine is running, or until engine cools for several minutes after running. Wipe up spilled gasoline before starting engine.

5. Keep all guards, shields and safety devices in place. Repair or replace defective or damaged parts.

WHILE OPERATING

6. Do not run engine indoors.

7. Always maintain secure footing. Keep a firm grip on the handle and walk; never run. Never operate mower in wet grass. Mow only in daylight or good artificial light.

8. Mow across the face of slopes; never up and down. Use extreme caution when changing direction on slopes. Do not mow excessively steep slopes.

9. Keep face, hands and feet away from the mower housing and cutter blade when the engine is running. Stay behing the handle until the engine stops and keep clear of discharge opening at all times.

10. When mulching, keep grass bag in place and assure chute door is closed. When bagging grass, stop engine and assure chute door is closed before the bag is removed and emptied.

11. Shut engine off and wait for all moving parts to stop before unclogging chute.

12. Since the blade rotates for a few seconds after the throttle control is moved to OFF, stay behind the handle until all moving parts stop.

13. After striking a foreign object or if mower vibrates abnormally, stop engine and remove wire from spark plug. Check mower for damage and make all repairs before using mower again.

14. Stop the engine before adjusting the height-of-cut.

15. Stop the engine before crossing a gravel driveway, road or sidewalk.

16. Stop engine before leaving the operator's position – behind the handle. Disconnect high tension wire from spark plug if mower will be unattended.

17. Do not touch muffler or engine while it is running or shortly after it is stopped because muffler or engine will be hot enough to cause a burn.

MAINTENANCE

18. Perform only those maintenance instructions described in this manual. If major repairs are ever needed or if assistance is desired, contact an Authorized TORO Service Dealer.

19. Before mower is cleaned, inspected, serviced or adjusted, stop engine and disconnect high tension wire from spark plug. Keep wire away from plug to prevent accidental starting.

20. To assure the mower is in safe operating condition, frequently check and keep all nuts, bolts and screws tight. Assure blade bolt is tightened to proper specifications.

21. To reduce fire hazard, keep engine free of excessive grease, grass, leaves and accumulations of dirt.

22. Check grass catcher bag frequently for wear or deterioration. Replace with a new bag for your protection.

23. Allow engine to cool before storing mower in any enclosure. Do not store mower near any open flame or where gasoline fumes may be ignited by a spark.

24. Do not overspeed the engine by changing governor settings.

25. At the time of manufacture the mower conformed to the safety standards in effect for

©The Toro Company – 1986

rotary mowers. To assure optimum performance and continued safety certification of the mower, use genuine TORO replacement parts and accessories. Replacement parts and accessories made by other manufacturers may result in non-conformance with the safety standards, and that could be dangerous.

SYMBOL GLOSSARY



TABLE OF CONTENTS

	Page
Set-Up Instructions	3
Before Operating	4
Operating Instructions	4-7
Maintenance	7-11
Servicing Air Cleaner	7
Replacing Spark Plug	7
Draining Gasoline	8
Adjusting Throttle	8
Changing Crankcase Oil	8
Adjusting Wheel Drive	8
Inspecting/Removing/Sharpening Blade	9
Lubrication	10
Adjusting Ground Speed Control For Neutral	10
Charging Battery	10
Cleaning Mower Housing	10
Preparing Mower For Storage	11
Optional Spark Arrestor	11
Product Identification	11
Toro Service Support	11
Maintenance Record	12-14

SET-UP INSTRUCTIONS

INSTALL HANDLE, BAG AND BATTERY

1. Align handles and tighten handle knobs (Fig. 1). Bend handle latches slightly toward each other.

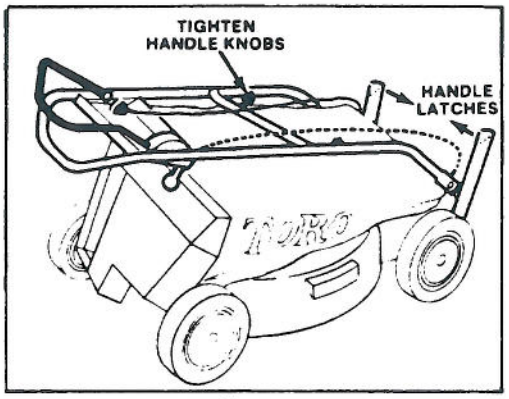

Figure 1

2. Pivot handle backward until handle stud snaps into center hole of handle latch (Fig. 2). Assure control cables are to the rear and inside of handles.

3. Install grass bag: refer to Using Grass Bag. page 6, steps 1-5.

4. Charge battery (Key Start model): refer to Charging Battery, Page 10. Slide battery, decal side up, between slots on back of control panel and connect wires (Fig. 3). Insert key into switch when ready to start engine.

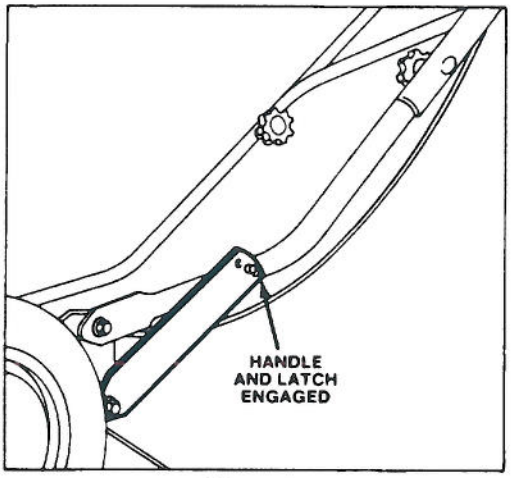

Figure 2

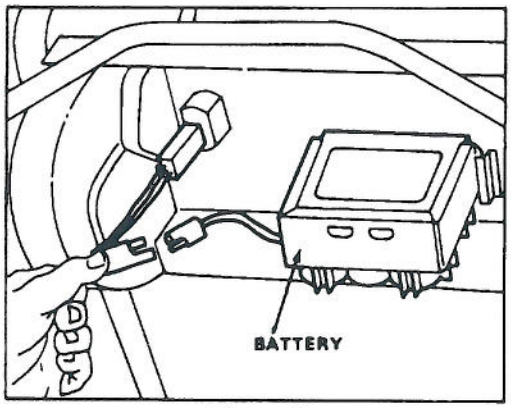

Figure 3

FILL CRANKCASE WITH OIL

Initially, crankcase must be filled with 18 ounces (0.532 l) of SAE 30 oil. Use any high quality detergent oil having the American Petroleum Institute – API – "service classification" MS, SC, SD, SE or SF.

Before each use, assure oil level is in SAFE range. Add oil if level is low.

1. Position mower on level surface and clean around oil dipstick.

2. Remove dipstick by rotating cap counter-clockwise 1/4 turn.

3. Wipe dipstick and insert it into filler neck. Rotate cap clockwise 1/4 turn. Then remove dipstick and check level of oil (Fig. 4). If level is low, add only enough oil to raise level to FULL mark on dipstick. DO NOT FILL ABOVE FULL MARK BECAUSE ENGINE COULD BE DAMAGED WHEN STARTED.

5. Insert dipstick into filler neck and rotate cap clockwise 1/4 turn to lock.

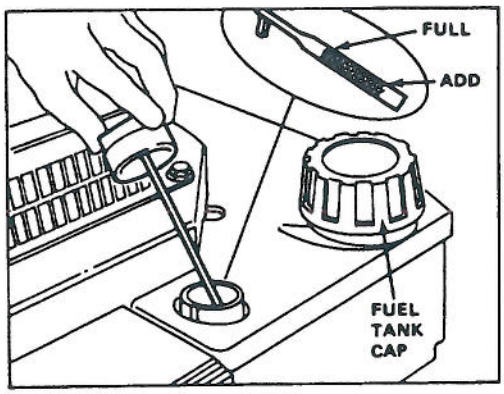

Figure 4

Note: Check oil level each time mower is used or after every 5 operating hours. Initially, change oil after the first 2 hours of operation; thereafter, change oil after every 25 hours of operation. More frequent oil changes are required in dusty or dirty conditions.

FILL FUEL TANK WITH GASOLINE

Note: The Toro Company strongly recommends the use of fresh, clean, UNLEADED regular grade gasoline in Toro gasoline powered products. Unleaded gasoline burns cleaner, extends engine life, and promotes good starting by reducing the build-up of combustion chamber deposits. Leaded gasoline can be used if unleaded is not available.

1. Clean around fuel tank cap and remove cap from tank (Fig. 4). Using unleaded gasoline, fill fuel tank to within 1/2 inch (13 mm) from top of tank.

2. Install fuel tank cap and wipe up any spilled gasoline.

IMPORTANT: Do not mix oil with the gasoline. Never use methanol, gasoline containing methanol, gasohol containing more than 10% ethanol, gasoline additives, premium gasoline, or white gas because engine fuel system damage could result.

⚠ DANGER

Gasoline is extremely flammable and explosive under certain conditions. Do not smoke when handling fuel and keep fuel far away from open flames and sparks. Never buy more than a 30 day supply of gasoline. Store gasoline in an approved container and keep it out of the reach of children.

Refuel outdoors, only when engine is cold. Fill tank to within 1/2" (13 mm) from its top. This space is for expansion of fuel. Use funnel or spout to prevent spilling. Wipe up any spilled gas.

OPERATING INSTRUCTIONS

5-in-1 MOWING VERSATILITY

REAR BAG – Bag lush grass in the spring to help keep your lawn free of thatch forming clippings.

MULCH – In summer, when grass grows slower and is drier, mulch by closing chute door (Fig. 5). For convenience and protection, keep grass bag on mower.

SIDE DISCHARGE – Disperse clippings with optional, rear-mounted side discharge chute which installs in seconds. Between the handle design lets you trim on bith sides (Fig. 6).

SHRED LEAVES – In fall, optional leaf shredder (Fig. 7) reduces leaves to a fraction of their original size while you bag. Minimizes emptying stops and number of trash bags used for disposal.

REMOVE THATCH – As spring tines on optional Toro Dethatcher scratch and vibrate through the grass, thatch is loosened and conveniently vacuumed into the bag (Fig. 8).

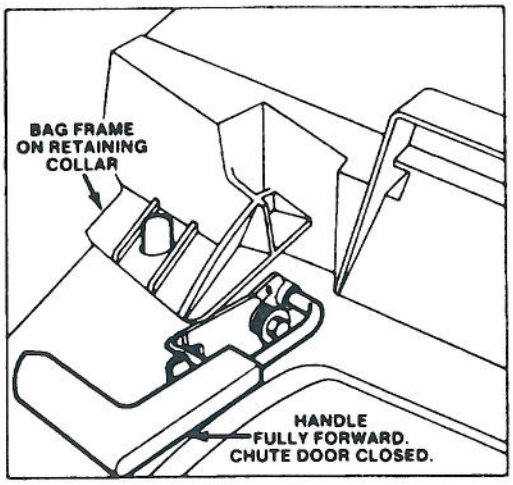

Figure 5

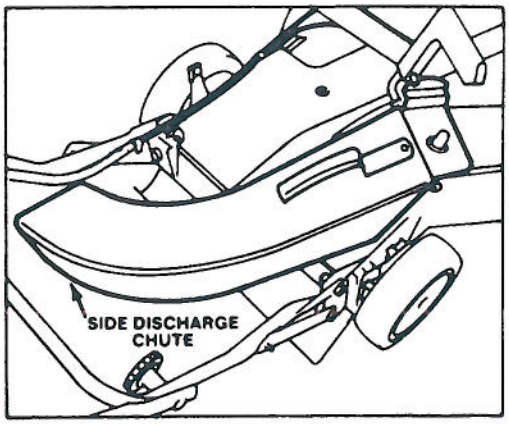

Figure 6

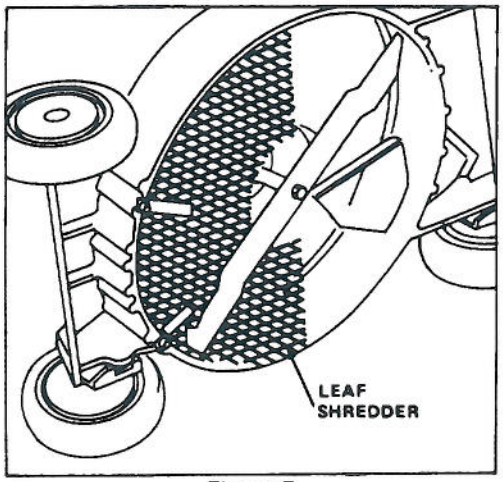

Figure 7

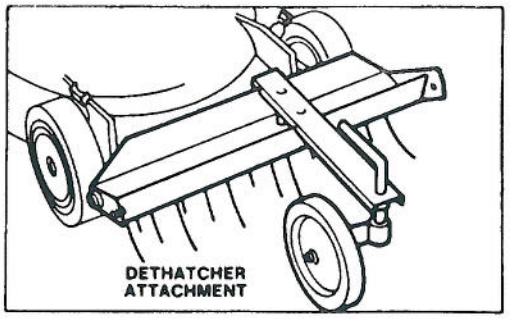

Figure 8

OPERATING TIPS

1. CHECK OIL LEVEL – Maintain oil level in SAFE range as shown on dipstick.

2. BEFORE EACH MOWING – Assure self-propelled drive and control bar function properly. When control bar is released, self-propelled drive is designed to stop.

3. CUTTING AND BAGGING – best results are achieved when engine is running at maximum speed and only about 1/3 of the grass blade is cut. If long grass must be cut, use highest height-of-cut setting for first mowing. Then recut the grass at a more normal setting. If too long of grass is cut, mower may plug and cause engine to stall.

4. SHARP BLADE – Begin each cutting season with a sharp blade. Periodically file down nicks.

STARTING, STOPPING AND SELF-PROPELLING

1. CONTROLS – Key switch (Key Start Models) throttle, ground speed control and self-propelled control bar are on upper handle (Fig. 9). Fingertip starter is on top of engine.

2. Push high tension wire onto spark plug and on self-propelled models move ground speed control to "N" (Fig. 9).

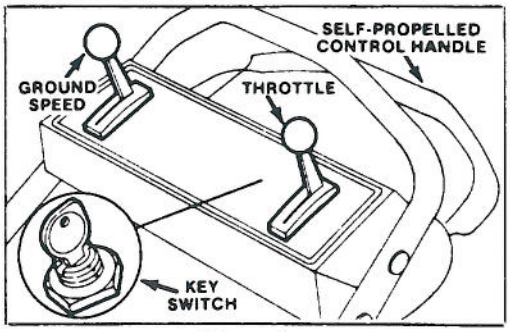

Figure 9

3. FINGERTIP STARTING – Move throttle to CHOKE. Pull engine mounted fingertip starter (Fig. 10) and regulate throttle as desired when engine starts.

4. KEY-LECTRIC STARTING - Move throttle (Fig. 9) to CHOKE. Turn Key (Fig. 9) to START and release when engine begins running. Regulate throttle as desired.

Note: If battery is discharged, engine can be started with the recoil starter (Fig. 10).

5. TRACTION OPERATION (Self-propelled model) – Move ground speed control to desired setting and squeeze control bar against handle to drive. Ground speed varies, depending on space between control bar and handle.(Fig. 9).

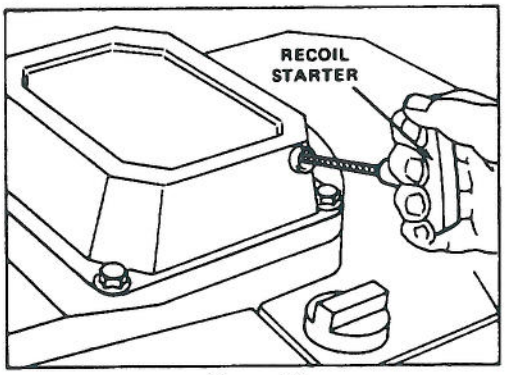

Figure 10

6. STOPPING (Fig. 9) – release control bar to stop traction drive. Move ground speed control to "N" on self-propelled models. To stop engine, move throttle to OFF. Remove key from switch or pull wire off spark plug if mower is unattended or not used.

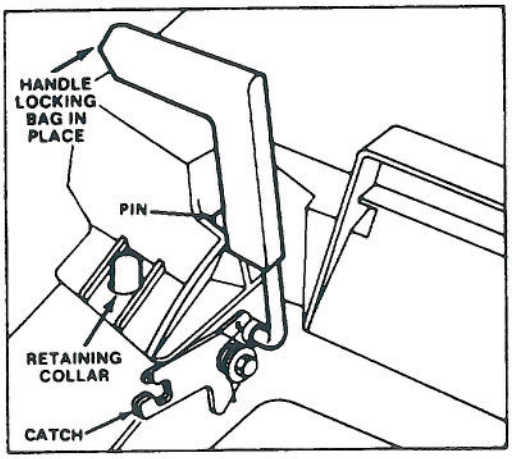

Figure 11

USING GRASS BAG

Keep bag installed when bagging or mulching.

1. Stop engine and wait for all parts to stop.

2. Assure chute door handle is fully forward and pin is engaged in catch.

3. INSTALLING BAG – Slide hole in bag frame onto retaining collar on housing (Fig. 11) and set rear of bag frame onto lower handle.

4. Pull chute door handle forward until pin clears catch and move handle rearward until pin locks in bag notch (Fig. 11). Chute door in mower housing is now open. It may be necessary to push down on top right of bag door to release handle locking pin from catch.

⚠ CAUTION

Except when side discharge attachment is used, never open chute door on mower when engine is running unless grass bag is properly installed, because grass clippings and other debris discharges with enough force to cause injury.

The grass bag material will catch and contain the majority of foreign objects, such as small stones and other similar debris. The bag material, however, is subject to normal wear and deterioration. So check the bag frequently, and if it is defective, install a new genuine TORO replacement bag that has this or similar warning.

5. EMPTYING BAG – Release control bar and wait for blade to stop. Move chute door handle forward to engage the locking pin with catch (Fig. 5). Grasp handle at front and rear of bag and lift bag off mower. For protection, always keep hands and feet away from mower housing because engine is running. Gradually tip bag forward to empty clippings.

⚠ CAUTION: If chute door cannot be closed because grass clippings clog discharge area, gently move chute door handle back and forth until door can be closed completely. Do not force chute door closed because door or handle may be damaged. If door still cannot be closed, stop engine and remove obstruction.

6. To reinstall bag, repeat steps 3 and 4.

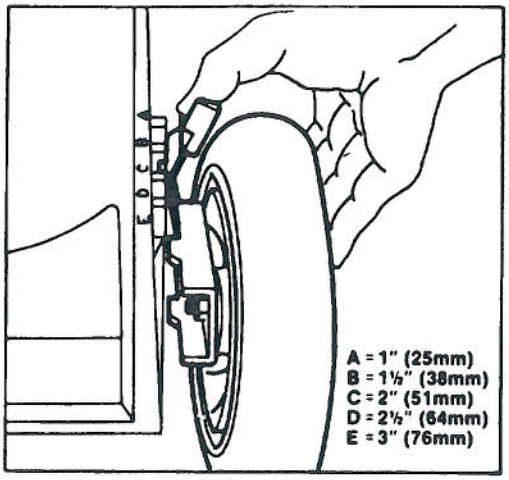

Figure 12

ADJUSTING HEIGHT-OF-CUT

Five letters cast into the housing represent each graduated increment (Fig. 12).

1. Stop the engine.
2. For easier adjustment, lift housing up so wheel is off ground. Squeeze adjusting lever toward wheel and move them to desired setting (Fig. 12). Assure pin on adjusting lever engages notch in housing. Adjust all wheels to the same setting.

Note: Front wheels can be adjusted to 1/2 inch. Move adjusting lever past "A" and release pin into hole in housing.

MAINTENANCE

⚠ CAUTION

Pull wire off spark plug before performing adjustments or maintenance.

SERVICING AIR CLEANER

Normally, clean air cleaner after every 25 operating hours. More frequent cleaning is required when mower is operated in dusty or dirty conditions.

1. Stop engine and remove key from switch or pull wire off spark plug.

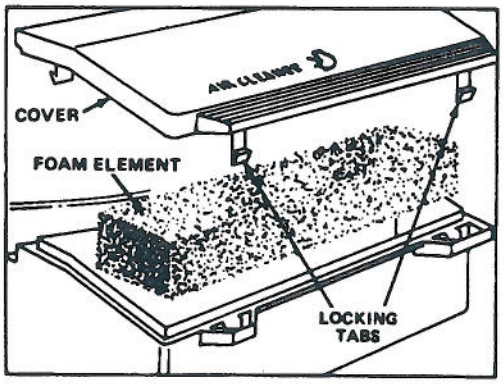

Figure 13

2. Push in locking tabs and lift off air cleaner cover. Clean cover thoroughly (Fig. 13).
3. If top of foam element is dirty, remove it from air cleaner body (Fig. 13). Clean thoroughly.
A. WASH foam element in a solution of liquid soap and warm water. Squeeze to remove dirt, but do not twist because foam may tear.
B. DRY by wrapping in a clean rag. Squeeze rag and foam element to dry.
C. SATURATE element with 5 teaspoons (25 ml) of SAE 30 engine oil. Squeeze element to remove excess oil and to distribute oil thoroughly. A damp element is desirable.
4. Reinstall foam element and air cleaner cover.

IMPORTANT: Do not operate engine without air cleaner element because extreme engine wear and damage will likely result.

REPLACING SPARK PLUG

Use an NGK BPR6ES spark plug or equivalent. Correct air gap is 0.032" (0.813 mm). Remove plug after every 25 operating hours and check its condition.

1. Stop engine and pull wire off spark plug.
2. Clean around spark plug and remove plug from cylinder head.

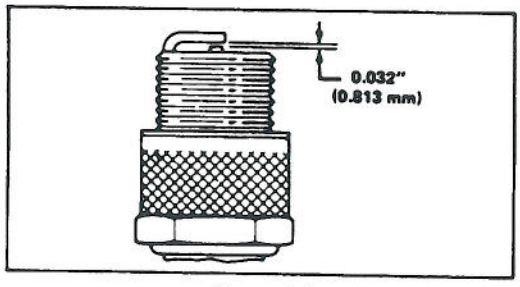

Figure 14

IMPORTANT: Replace a cracked, fouled or dirty spark plug. Do not sand blast, scrape or clean electrodes because engine damage could result from grit entering cylinder.

3. Set air gap at 0.032" (0.813 mm) (Fig. 14). Install correctly gapped spark plug and gasket seal. Tighten plug firmly to 15 ft-lb (20.4 N-m).

DRAINING GASOLINE

1. Stop engine. Remove key from switch or pull wire off spark plug.

2. Remove cap from fuel tank and use pump-type syphon to drain fuel into clean gas can. **Note:** This is the only procedure recommended for draining fuel.

ADJUSTING THROTTLE

Throttle control adjustment may be required if engine does not start or stop. Whenever a new throttle control cable is installed, throttle must be adjusted.

1. Stop engine and remove key from switch or pull wire off spark plug.

2. Close door on mower housing and remove grass bag.

3. Move throttle control to FAST .

4. Loosen cable clamp screw until throttle cable slides (Fig. 15). Align holes in throttle lever and throttle bracket. Pull throttle cable slightly to remove any slack and tighten cable clamp screw to lock adjustment in place.

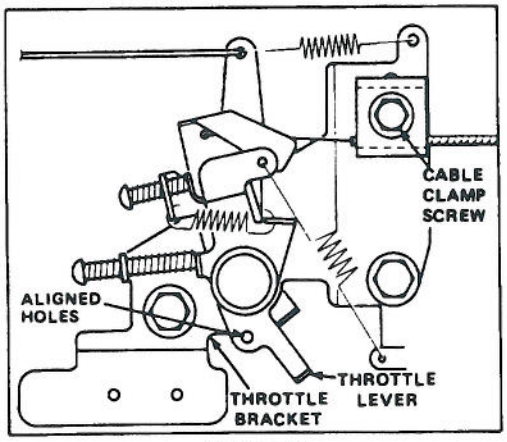

Figure 15

CHANGING CRANKCASE OIL

Change oil after the first 2 operating hours and after every 25 hours thereafter. Since warm oil drains better and carries more contaminants than cold oil, run engine for a minute or so before draining oil.

1. Stop engine and remove key from switch or pull wire off spark plug.

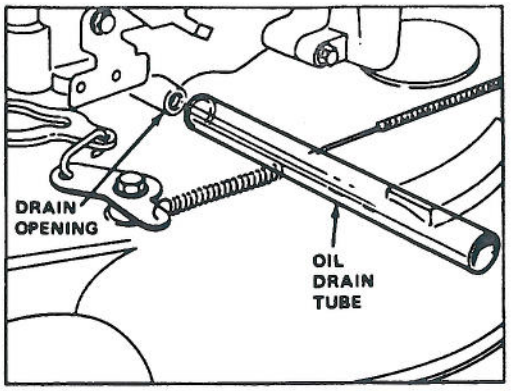

Figure 16

2. Remove grass bag. Drain gasoline from fuel tank; refer to Draining Gasoline, page 8.

3. Raise left side of mower at least 12 inches and remove drain plug.

4. Insert oil drain tube over drain opening and lower mower. Raise right side of mower until all oil has flowed into drain pan.

5. After draining, install drain plug and fill engine with fresh oil; refer to Fill Crankcase With Oil, page 4.

ADJUSTING WHEEL DRIVE (Self-propelled models)

If mower does not self-propel or has a tendency to creep forward when drive is not engaged, adjust wheel drive control knob on rear of gear box.

1. Close door in mower housing and remove bag.

2. ADJUSTMENT (Fig. 17) – Rotate control knob clockwise 1/2 turn if mower does not self-propel. If mower creeps forward, rotate knob 1/2 turn counterclockwise to loosen belt.

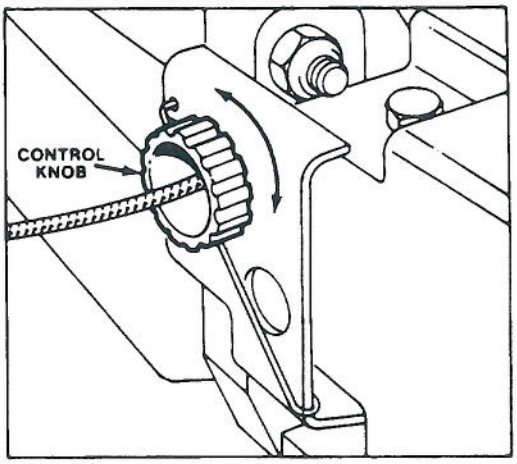

Figure 17

3. CHECK ADJUSTMENT – Slowly pull mower backward while control bar is gradually moved toward handle. Adjustment is correct when rear wheels stop turning and control bar is about 1-inch from handle (Fig. 18).
4. Repeat steps 2 and 3 until properly adjusted.

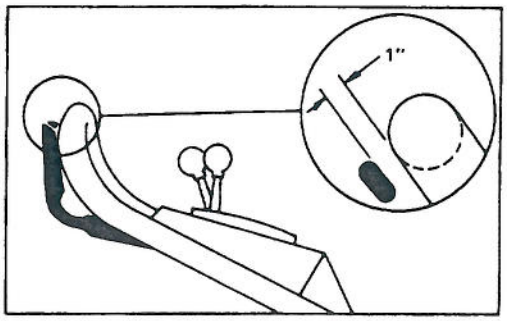

Figure 18

INSPECTING/REMOVING/SHARPENING BLADE

1. Stop engine and remove key from switch or pull wire off spark plug.

2. Drain gasoline from fuel tank: refer to Draining Gasoline, page 8.

3. Tip mower on its right side (Fig. 19). Avoid rotating blade. Starting problems may result.

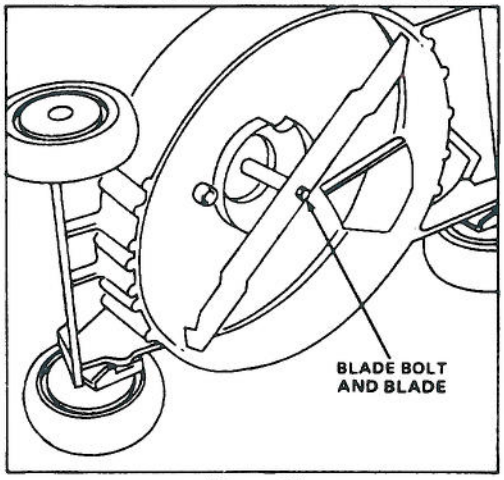

Figure 19

4. INSPECTING BLADE – Carefully examine blade for sharpness and wear, especially where flat and curved parts meet (Fig. 20A). Since sand and abrasive material can wear away the metal that connects the flat and curved parts of the blade, check blade before using the mower. If a slot or wear is noticed (Fig. 20B & C), replace blade. Refer to step 5.

5. REMOVING BLADE – Grasp end of blade using a rag or thickly padded glove. Remove blade bolt and blade (Fig. 19).

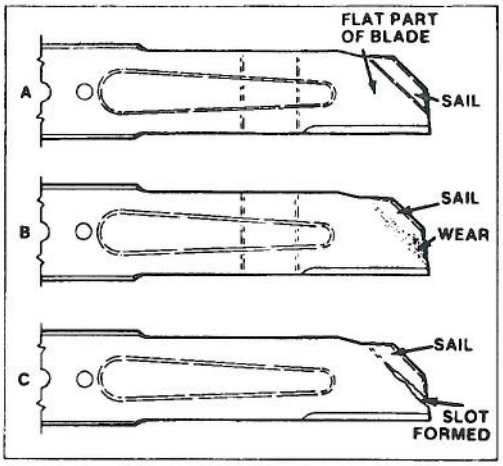

Figure 20

CAUTION

If blade is allowed to wear, a slot may form near the sail. Eventually a piece of blade may break off resulting in serious injury to yourself or a bystander.

Note: For optimum performance, install new blade before cutting season begins. During the year file down small nicks to maintain the cutting edge.

6. SHARPENING BLADE – Using a file, sharpen top side of blade and maintain original cutting angle (Fig. 21). The blade will remain balanced if same amount of material is removed from both cutting edges.

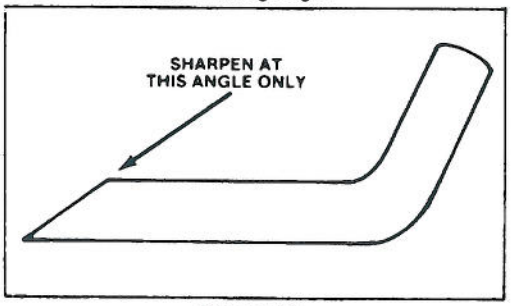

Figure 21

IMPORTANT: Check balance of blade by putting it on a blade balancer. An inexpensive balancer can be purchased at a hardware store. A balanced blade will stay in horizontal position and an unbalanced blade will settle to the heavy side. If blade is not balanced, file more metal off cutting edge on heavy end of blade.

7. Install sharp, balanced blade and blade bolt. Sail part of blade must point toward top of mower housing to assure correct installation. Tighten the blade bolt to 50 ft-lb (68 N-m).

LUBRICATION

After every 25 operating hours or when season ends, front and rear wheels must be lubricated.

1. Apply 2 or 3 drops of light oil on inside of front wheel bolts. Spin wheels to distribute oil into bushings. Wipe up excess oil.

2. On self-propelled models, move rear wheel height-of-cut levers to "C" setting. Wipe grease fittings with clean rag (Fig. 22). Install grease gun onto fitting and gently apply 1 pump of #2 Multi-Purpose Lithium Base Grease. Excess pressure may damage seals.

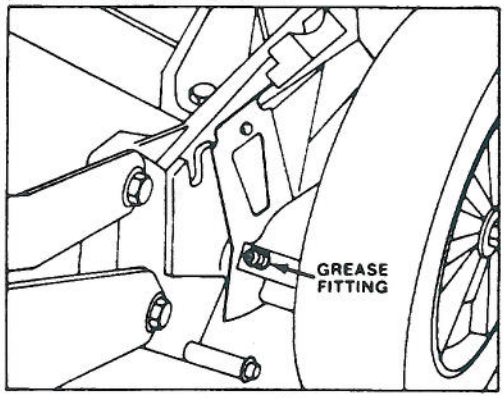

Figure 22

ADJUSTING GROUND SPEED CONTROL FOR NEUTRAL

Whenever a new ground speed control cable is installed or if mower drives when ground speed control is in "N", an adjustment is required.

1. Stop engine and remove grass bag.

2. Remove two cap screws and lift off transmission cover.

3. ADJUSTMENT (Fig. 23) – Loosen cable clamp screw until cable conduit slides. Push transmission control lever toward cable clamp screw and hold lever in place. Pull cable to remove slack and tighten clamp screw.

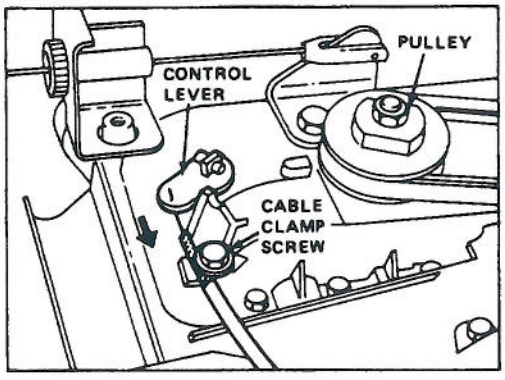

Figure 23

4. CHECK ADJUSTMENT – Assure ground speed control is in "N" and pull mower backward. Pulley (Fig. 23) should not rotate. If pulley does rotate, readjust for neutral: refer to step 3.

5. Install transmission cover and grass bag.

CHARGING BATTERY;

Although a new battery is not fully charged, a partial charge of 4 hours will provide enough energy for several starts. However, a new battery must be charged for 72 continuous hours to assure full charge. Also charge battery for 72 hours when mower is stored and in the spring. During normal operation, engine alternator keeps battery charged.

1. Stop engine and disconnect wire harness from battery terminal (Fig. 24).

2. If desired, battery can be removed by sliding it out of mounting slots. However, removal is not required if mower can be positioned near an electrical outlet.

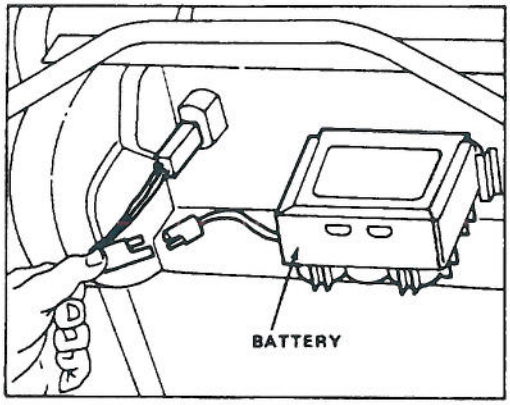

Figure 24

3. Connect TORO electro charger to battery and plug into power outlet. After charging battery for specified time, unplug charger and disconnect from battery.

4. Connect wiring harness to battery terminal.

IMPORTANT: Only the TORO electro charger is recommended because other chargers could damage the battery. Always use charger indoors and charge battery at room temperature (+70 F) whenever possible. Do not charge battery longer than 72 hours because damage could result.

CLEANING MOWER HOUSING

To assure optimum performance, keep underside of mower housing and inside of discharge area clean.

1. Drain gasoline from fuel tank: refer to Draining Gasoline, page 8.
2. Tip mower on its right side (Fig. 25). Avoid rotating blade because starting problems may result.

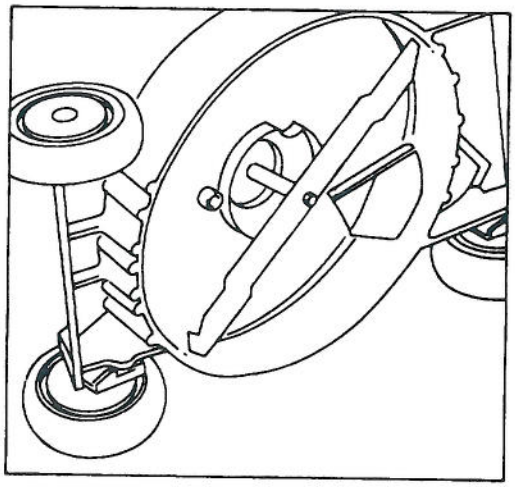

Figure 25

3. Remove dirt and grass clippings that stick to housing by spraying it with a garden hose. Scrape out remaining debris with hardwood scraper. Avoid burrs and sharp edges.

PREPARING MOWER FOR STORAGE

1. Drain gasoline: refer to Draining Gasoline. page 8. If gasoline is not drained, gum-like varnish deposits will form and cause poor engine operation, even starting problems.
2. Drain oil: refer to Changing Crankcase Oil, page 8. After oil is drained, do not fill crankcase with oil until the following steps (3-10) are completed.
3. Remove spark plug and pour 2 tablespoons of SAE 30 oil into hole in cylinder. Pull starter rope slowly to coat inside of cylinder. Install spark plug and tighten to 15 ft-lb (20.4 N-m). DO NOT INSTALL HIGH TENSION WIRE ON SPARK PLUG.
4. Clean underside of housing: refer to Cleaning Mower Housing, page 10.
5. Check condition of blade: refer to Inspecting/Removing/Sharpening Blade, page 9.
6. Tighten all nuts, bolts and screws.
7. Clean dirt and chaff from cylinder, cylinder head fins and blower housing. Also remove grass clippings, dirt and grime from external parts of the engine, shrouding and top of mower housing.
8. Clean air cleaner: refer to Servicing Air Cleaner, page 7.
9. Lubricate the wheels: refer to Lubrification, page 10.
10. Touch up all rusted or chipped paint surfaces. Toro Re-Kote paint is available from an Authorized TORO Service Dealer.
11. Fill crankcase with oil: refer to Fill Crankcase with Oil, page 4.
12. Charge battery for 72 hours: refer to Charging battery, page 10.
13. Store mower in a clean dry place. Cover mower to keep it clean and protected.

OPTIONAL SPARK ARRESTOR — PART #56-6730

If a spark arrestor is required because of local, state or federal regulations, it may be purchased at your local Authorized TORO Service Dealer. If mower is operated on any California forest, brush or grass covered land without a properly operating spark arrestor, the operator is violating state law, Section 4442 Public Resources Code.

PRODUCT IDENTIFICATION

A model number and a serial number decal is located at rear of mower housing, near the discharge door. Always refer to specific numbers on this decal in correspondence or when replacement parts are needed.

TORO SERVICE SUPPORT

If help — concerning safety, set-up, operation and maintenance or troubleshooting — is ever needed, contact the local Authorized TORO Service Dealer or Distributor. Refer to the "Yellow Pages" for assistance. In addition to skilled service technicians, the dealer and distributor have factory approved accessories and replacement parts. Keep your Toro all TORO. Buy genuine TORO replacement parts and accessories.

MAINTENANCE RECORD

Date	Hours Used						

MAINTENANCE RECORD

Date	Hours Used					

MAINTENANCE RECORD

Date	Hours Used					