Form No. 3390-164 Rev A

TORO®

Count on it.

Parts Catalog

Z Master® Professional 6000 Series Riding Mower

with 152cm TURBO FORCE® Side Discharge Mower

Model No. 74925TE—Serial No. 315000001 and Up

Register at www.Toro.com.
Original Instructions (EN)

CE

3390-164 A

Ordering Replacement Parts

To order replacement parts, please supply the part number, the quantity, and the description of each part desired.

Understanding Reference Numbers

Each identified part in an illustration has a reference number. The reference number for a part also appears in the parts list, along with other information about the part.

This catalog uses two special reference number formats, one to indicate parts in a service assembly and another to indicate the quantity of a given part in an illustration.

Service Assembly Reference Numbers

Parts in service assemblies have reference numbers in the form a:b. The a represents the reference number of the entire service assembly and the b represents a sequential number unique to each part within the service assembly.

For example, a wheel assembly might be identified by reference number 6, the tire by 6:1, the valve by 6:2, and the wheel by 6:3. When you order the assembly identified by reference number 6, you receive all parts identified by reference numbers 6:1,6:2, and 6:3. However, you may also order any part individually. Reference numbers of this type appear in illustration and in parts lists.

Reference Numbers Indicating Quantity

In an illustration, if a reference number indicates more than one part, the reference number has the form nX y. The n represents the quantity of the part, the X is the multiplication symbol, and the y represents the reference number.

For example, in an illustration, the reference number 2X 37 means that two of the parts identified by reference number 37 are indicated.

List of Abbreviations

AR: as required

ASM: assembly

BBC: blade brake control

BHTF: button head thread forming

CARR: carriage

CCW: counter clockwise

CW: clockwise

DEG: degrees

DPA: Dual Point Adjustment

ECM: electronic control module

EXT: external

FH: flat head

GA: gauge

HD: heavy-duty

HF: hex flange

HH: hex head

HHF: hex head flange

HHFTF: hex head flange thread forming

HJ: hex jam

HLH: hex lag head

HOC: height-of-cut

HP: high pressure

HSBH: hex socket button head

HSFH: hex socket flat head

HSH: hex socket head

HWH: hex washer head

HWHTF: hex washer head thread forming

HYD: hydraulic

LH: left hand

LP: low pressure

LPG: Liquefied Petroleum Gas

NI: nylon insert

NPTF: national pipe thread fine

PFH: phillips flat head

PPH: phillips pan head

PPHTF: phillips pan head thread forming

PRH: phillips round head

PTH: phillips truss head

PTO: power-take-off

RH: right hand

ROPS: roll-over protection system

RRB: rear roller brush

SFH: slotted fillister head

SHH: slotted hex head

SHWH: slotted hex washer head

SPH: slotted pan head

SQH: square head

SRH: slotted round head

STD: standard

TAP: self tapping

TTH: torx truss head

Contents

Frame, Caster and Z Stand Assembly 4
Roll-Over Protection System Assembly No. 116-0232 6
Caster Wheel and Fork Assembly 8
Z Stand Assembly 10
Hydraulic Pump, Idler and Belt Assembly 12
Pump Idler Assembly No. 116-1255 14
LH Hydro Assembly No. 126-1325 16
RH Hydro Assembly No. 126-1326 18
Parking Brake and Wheel Assembly 20
Fuel Tank Mounting Assembly 22
Fuel Tank Assembly No. 116-3979 24
Seat Mounting Assembly 26
Seat Assembly No. 125-3107 28
Motion Control Assembly 30
Fender, Console and Control Assembly 32
LH Console Assembly No. 115-7401 34
RH Console Assembly No. 115-7400 36
Electrical System Assembly 38
Deck Lift Assembly 40
Height-of-Cut Assembly No. 117-3842 42
Engine, Muffler and Clutch Assembly 44
Deck Assembly 46
Deck Decal Assembly No. 131-7683 48
Idler Assembly 50
Spindle Assembly No. 119-8560 52
Rubber Deflector Assembly No. 108-2792 54
Attachments and Accessories 56

© 2015—The Toro® Company
8111 Lyndale Avenue South
Bloomington, MN 55420

Contact us at www.Toro.com.
Printed in the USA.
All Rights Reserved

Frame, Caster and Z Stand Assembly

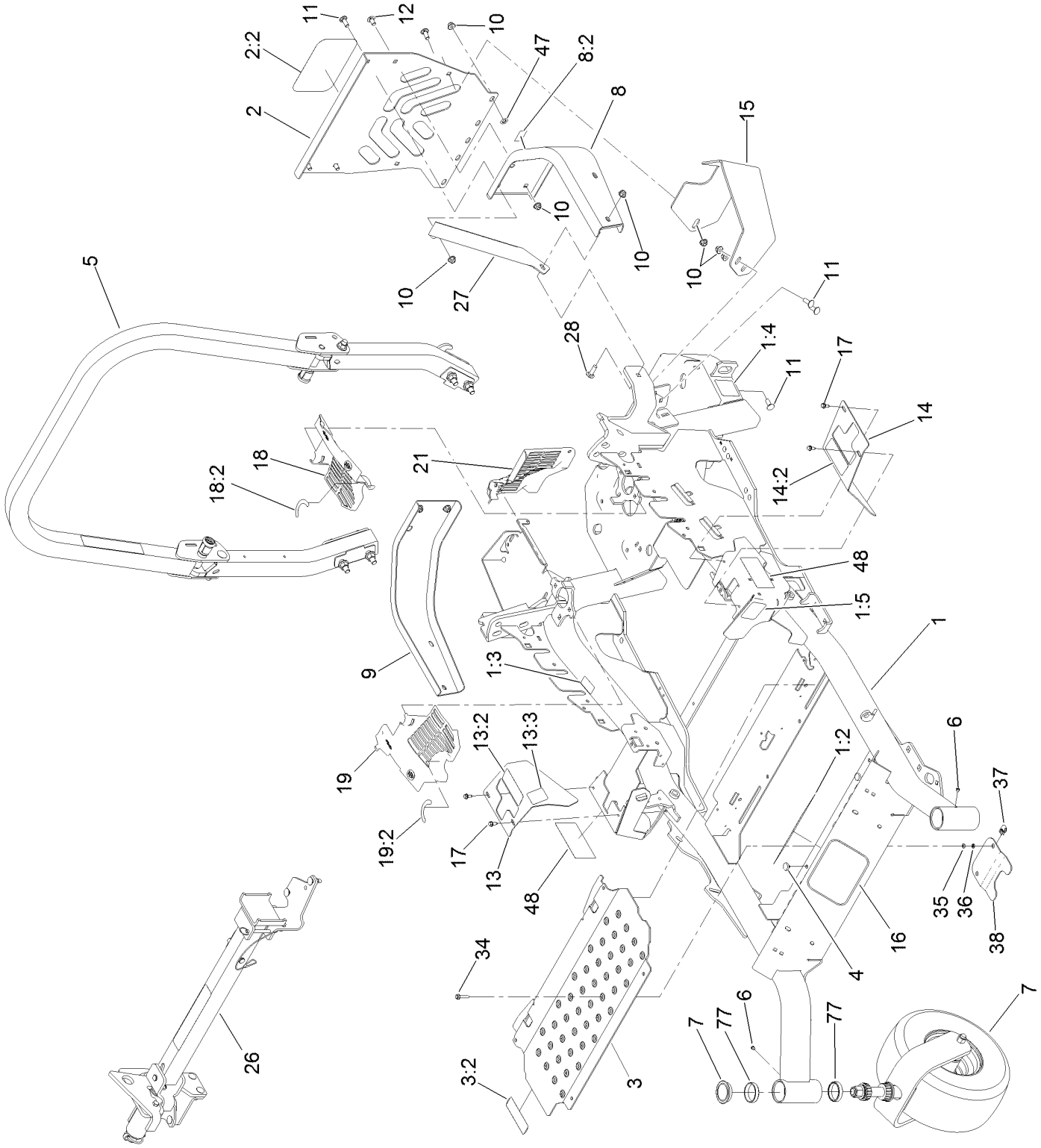

Frame, Caster and Z Stand Assembly (continued)

Ref.	Part Number	Qty.	Description
1	131-7681	1	Main Frame ASM
1:2	127-0335	1	Decal-Warning, Slope
1:3	106-5517	2	Decal-Warning, Hot Surface
1:4	106-2655	2	Decal-Hazard, Pinched Finger
1:5	117-3864	1	Decal-Fuel Fill, Ce
2	115-7410	1	Rear Guard ASM
2:2	67-7320	1	Decal
3	117-0915	1	Floorpan ASM
3:2	112-9028	1	Decal-Cover Missing
4	1-513658	2	Bumper
5	116-0232	1	ROPS ASM
6	1-811010	2	Plug
7		2	Caster Wheel ASM ●
8	117-3829	1	LH Rear Bumper ASM
8:2	106-5517	1	Decal-Warning, Hot Surface
9	116-0057-03	1	Bumper-RH
10	104-8301	11	Nut-Flange, NI
11	3231-22	7	Screw-CARR
12	3231-21	3	Screw-CARR
13	116-5898	1	RH Motion Control Cover ASM
13:2	99-8936	1	Decal-Control, Motion
13:3	116-5988	1	Decal-Park Brake, Ce
14	117-3831	1	LH Motion Control Cover ASM
14:2	99-8936	1	Decal-Control, Motion
15	117-0908-03	1	Guard-Muffler
16	68-3640	1	Decal
17	32144-10	4	Screw-HWH
18	117-3838	1	LH Hydro Guard ASM
18:2	117-3811	1	Decal-Hydro Oil
19	117-3839	1	RH Hydro Guard ASM
19:2	117-3811	1	Decal-Hydro Oil
21	109-9058	1	Guard-Hydro, Rear (RH)
26		1	Z Stand ASM ●
27	127-0324-03	1	Strap-Ce
28	3231-25	1	Bolt-CARR
34	3234-21	2	Screw-HHF
35	3256-60	2	Washer-Flat
36	106-8737	2	Nut-Retainer
37	107069	2	Clip
38	119-0395-03	1	Adapter-Captive
47	107-3154	2	Nut-Push
48	120-5895	2	Decal
77	1-543508	4	Cup-Bearing

● Not serviced separately

Roll-Over Protection System Assembly No. 116-0232

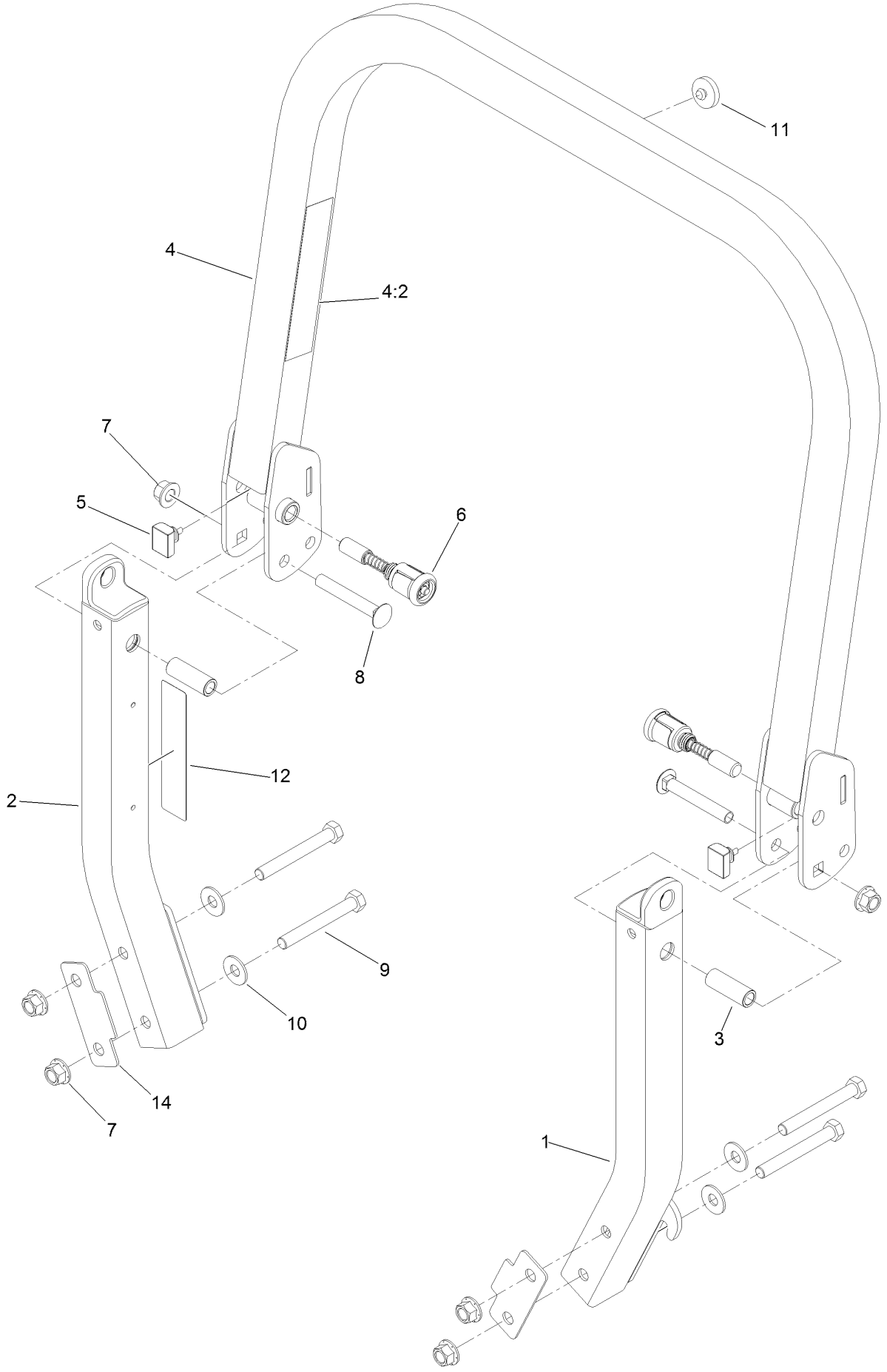

Roll-Over Protection System Assembly No. 116-0232 (continued)

Ref.	Part Number	Qty.	Description
1		1	Leg-ROPS, LH ●
2		1	Leg-ROPS, RH ●
3	109-6653	2	Spacer
4		1	Upper ROPS ASM ●
4:2	107-3069	1	Decal-Warning, Folding ROPS
5	109-5337	2	Bumper-ROPS
6	116-0104	2	Pin-Spring
7	99-5107	6	Nut-Lock
8	3233-10	2	Screw-CARR
9	325-35	4	Screw-HH
10	109-9505	4	Washer-Spring
11	109-9233	1	Bumper-Push-In, Rubber
12	117-0346	1	Decal-Caution, Fuel Vent
14	116-0960	2	Spacer

● Not serviced separately

Caster Wheel and Fork Assembly

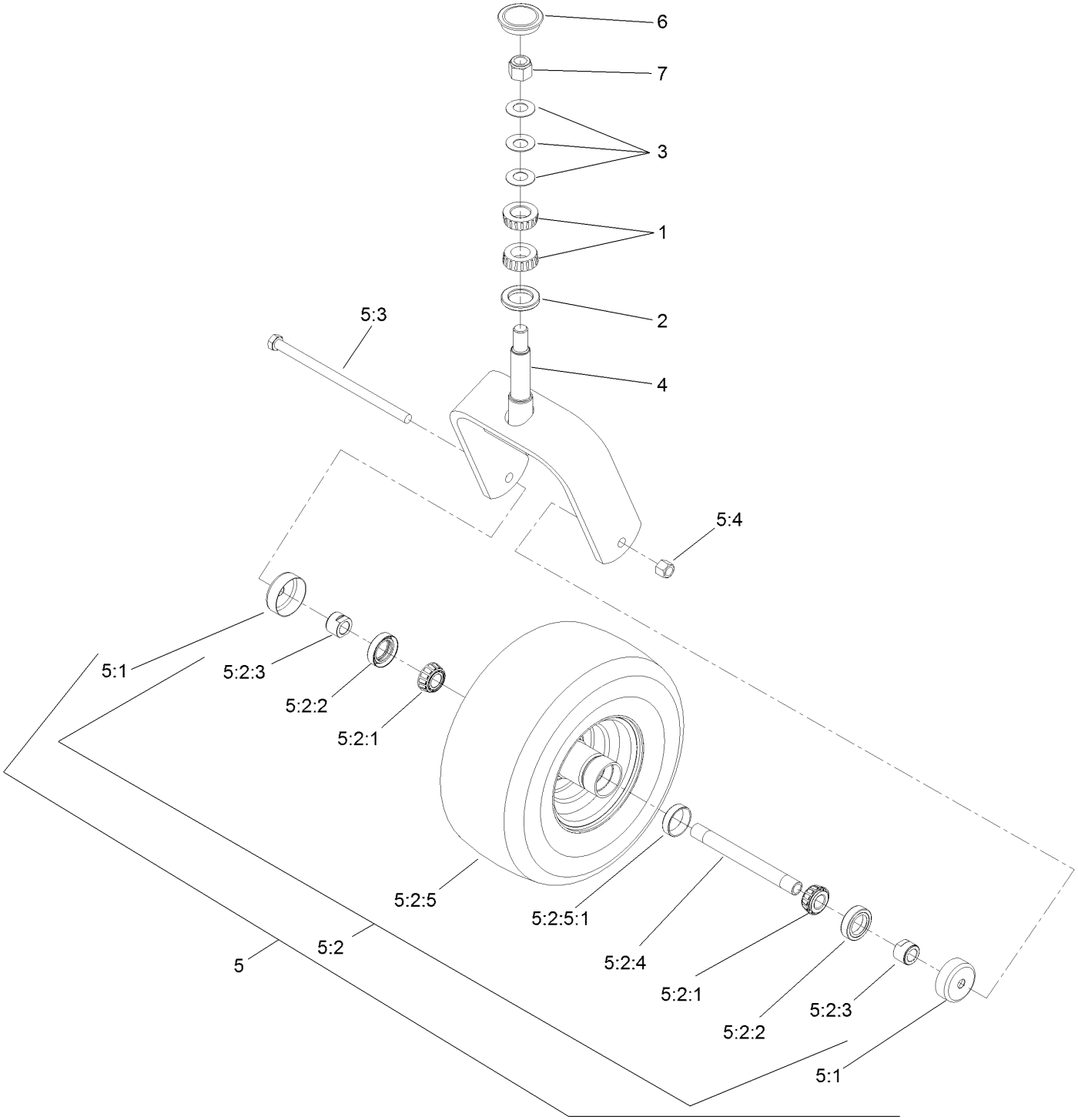

Caster Wheel and Fork Assembly (continued)

Ref.	Part Number	Qty.	Description
1	1-543509	2	Bearing-Roller, Tapered
2	116-5647	1	Seal-Grease
3	1-633508	3	Washer-Bellville
4	116-6707-01	1	Caster
5	109-9127	1	Wheel & Tire ASM
5:1	103-2768	2	Guard-Seal
5:2		1	Wheel And Tire ASM ●
5:2:1	1-633585	2	Bearing-Cone, Taper
5:2:2	103-0063	2	Seal-Caster
5:2:3	103-3051	2	Spacer-Nut ■
5:2:4	103-5156	1	Axle-Caster
5:2:5		1	Wheel And Tire ASM ●
5:2:5:1	1-633584	1	Bearing-Cup
5:3	325-39	1	Screw-HH
5:4	3296-23	1	Nut-Lock, NI
6	103-4882	1	Cap-Grease
7	3296-51	1	Nut-Lock, NI

● Not serviced separately
■ Use Pro-Lock, Nut Type (P/N 1-840022, .5ml tube) on threads.

Z Stand Assembly

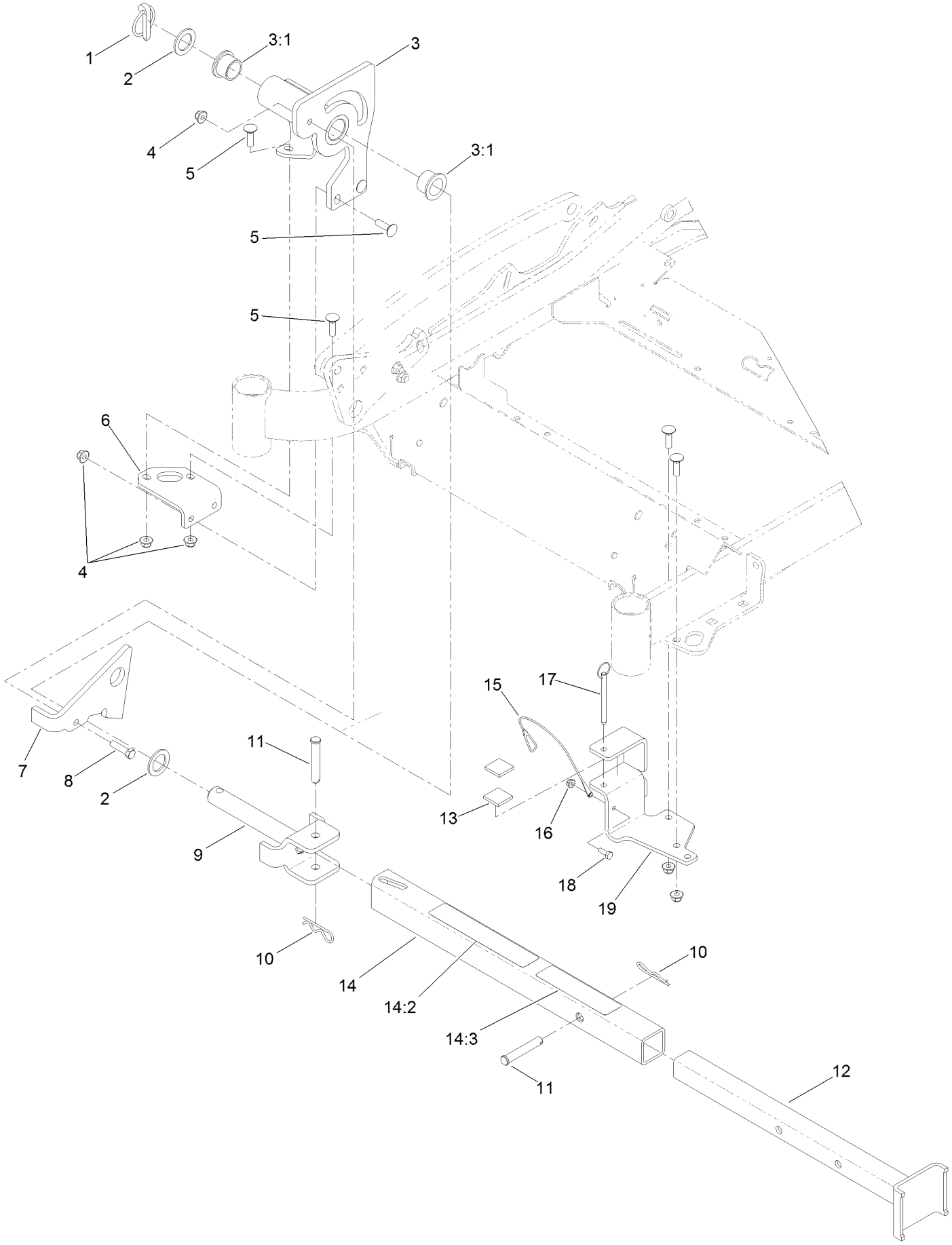

Z Stand Assembly (continued)

Ref.	Part Number	Qty.	Description
1	283-71	1	Pin-Lynch
2	3-6781	2	Washer-Thrust
3	115-3635	1	Z Stand Pivot ASM
3:1	94-1291	2	Bushing
4	104-8301	8	Nut-Flange, NI
5	3231-25	7	Bolt-CARR
6	115-3619-01	1	Bracket-Mount, Pivot
7	100-9686-01	1	Bracket-Latch
8	323-8	1	Screw-HH
9	100-9692-01	1	Pin-Pivot
10	3290-355	2	Pin-Hair
11	283-55	2	Pin-Clevis
12	115-3631-01	1	Tube-Inner
13	115-3613	2	Cushion-Rubber
14	115-3634	1	Outer Tube ASM
14:2	106-7464	1	Decal-Z Stand
14:3	107-3969	1	Decal-Warning
15	100-9385	1	Lanyard-Nylon
16	104-7201	1	Nut-Flange, NI
17	105-1647	1	Pin-Hitch, Cotterless
18	321-4	1	Screw-HH
19	115-3625-01	1	Cradle-Z Stand

Hydraulic Pump, Idler and Belt Assembly

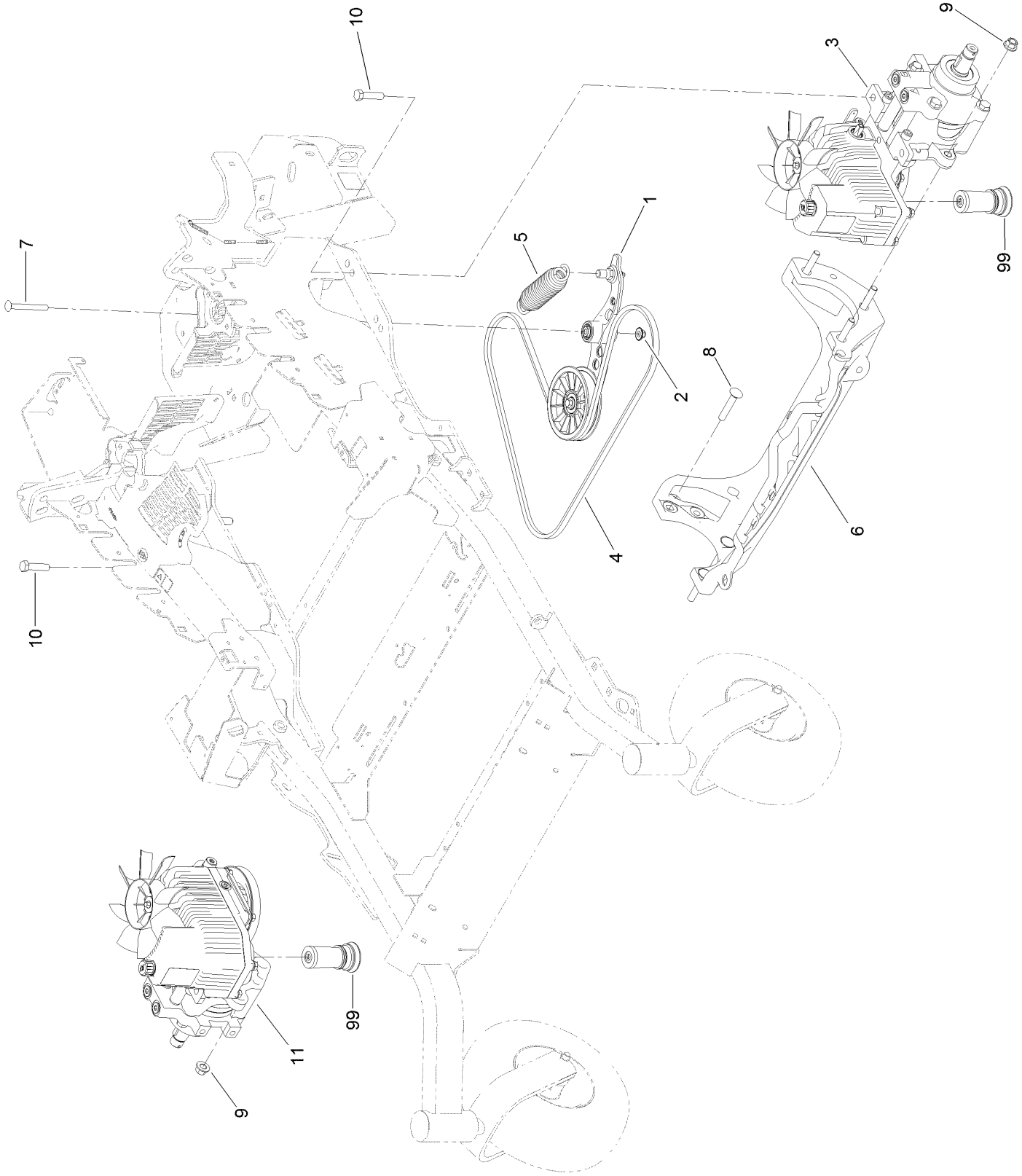

Hydraulic Pump, Idler and Belt Assembly (continued)

Ref.	Part Number	Qty.	Description
1	116-1255	1	Pump Idler ASM
2	109-6658	1	Nut-Flange, NI
3	126-1325	1	LH Hydro ASM (16Cc W/ Shock)
4	109-3388	1	Belt
5	116-6317	1	Spring-Extension
6	116-7558	1	Cradle-Hydro
7	116-1502	1	Bolt-Shoulder, Carriage
8	126-0095	6	Screw-CARR
9	99-5107	6	Nut-Lock
10	325-8	4	Screw-HH
11	126-1326	1	RH Hydro ASM (16Cc W/ Shock)
99	114-4713	1	Hypr-Oil 500 (Quart) ●
99	114-4714	1	Hypr-Oil 500 (Gallon) ●
99	114-4715	1	Hypr-Oil 500-5 (5 Gallon) ●
99	117-0390	1	Filter-Hydro

● Not illustrated

Pump Idler Assembly No. 116-1255

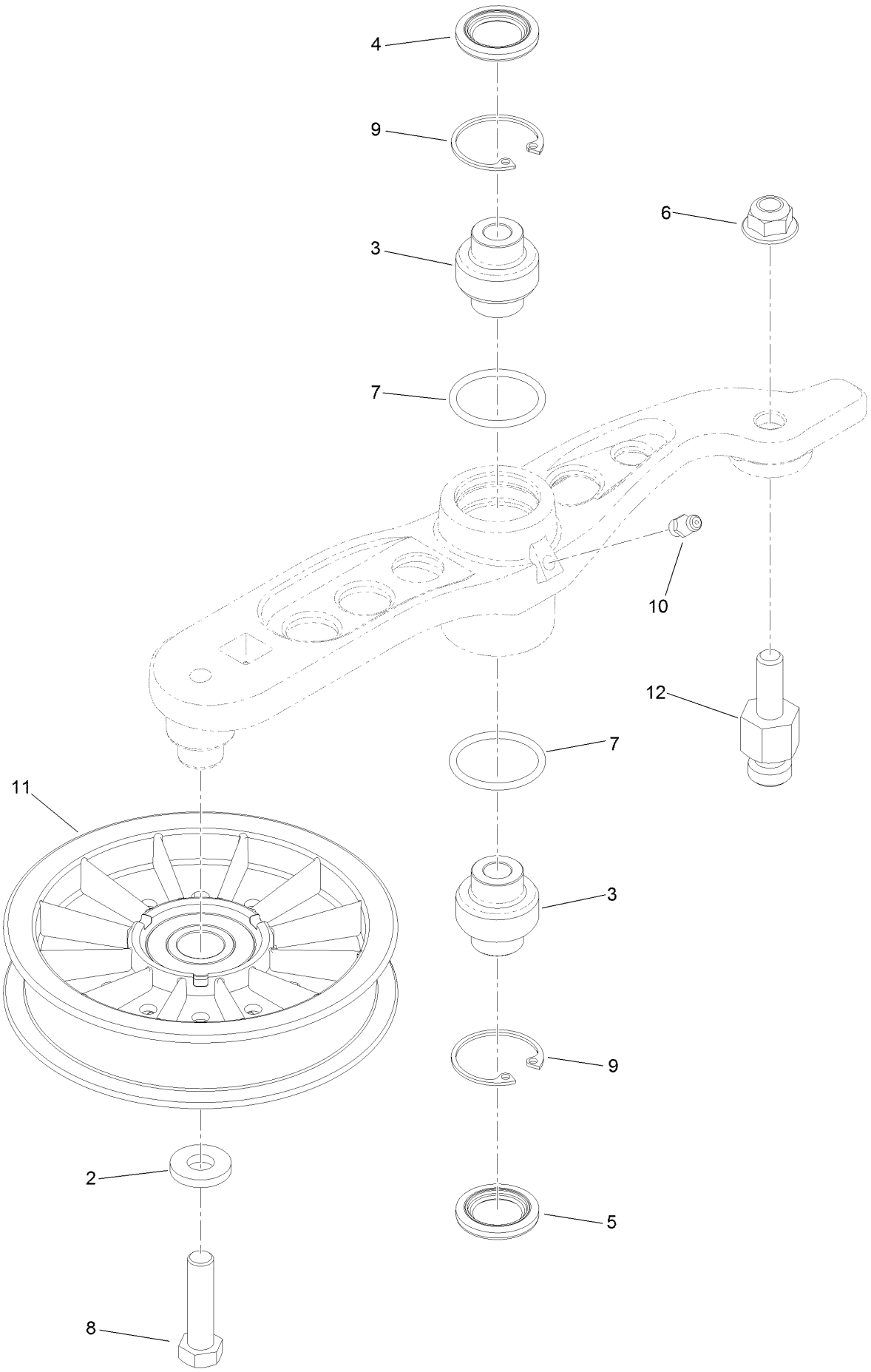

Pump Idler Assembly No. 116-1255 (continued)

Ref.	Part Number	Qty.	Description
2	43-0940	1	Spacer
3	103-3504	2	Bearing-Spherical
4	103-3505	1	Seal-Double Lip
5	103-3506	1	Seal-Lip, Single
6	109-6658	1	Nut-Flange, NI
7	106-7159	2	O-Ring
8	323-8	1	Screw-HH
9	32120-10	2	Ring-Snap
10	302-19	1	Fitting-Grease
11	109-8076	1	Pulley-Idler
12	116-3467	1	Pin-Spring, Anchor

LH Hydro Assembly No. 126-1325

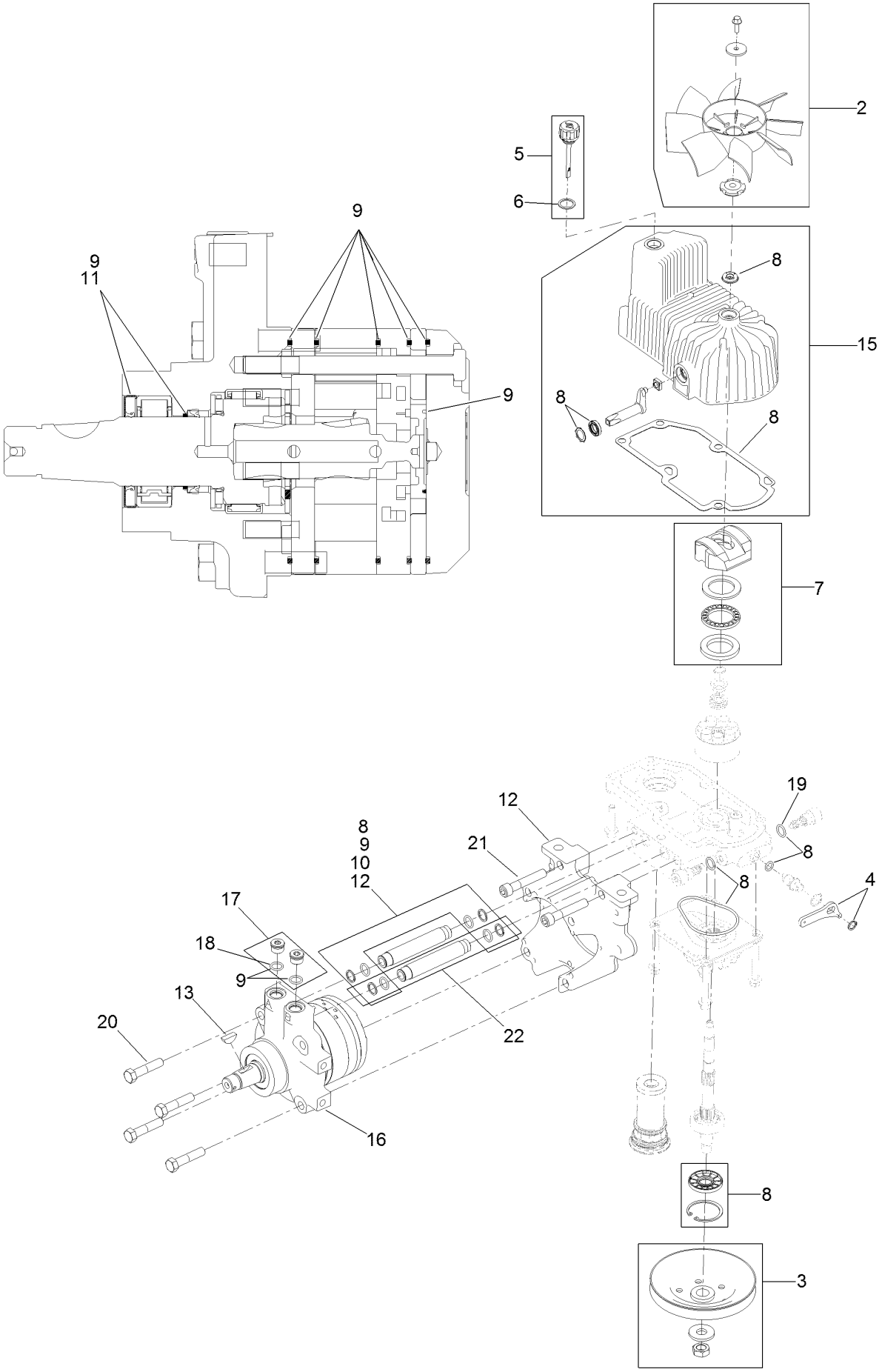

LH Hydro Assembly No. 126-1325 (continued)

Ref.	Part Number	Qty.	Description
2	116-0233	1	Fan Kit
3	116-0234	1	Pulley Kit
4	116-0235	1	Handle-Bypass Valve, Hydro
5	116-0236	1	Dipstick-Hydro W/Gasket
6	116-0237	1	Gasket-Dipstick, Hydro
7	116-1367	1	Swash Block Kit
8	116-1368	1	Pump Seal Kit
9	116-1369	1	Motor Seal Kit
10	116-1370	1	Tube Seal Kit
11	116-1371	1	Output Shaft Seal Kit
12	116-5469	1	Nose Cup-Uht
13	3257-42	1	Key-Woodruff
15	116-3287	1	Housing-LH
16	116-8917	1	Motor-Hydraulic, LH 280Cc
17	116-7901	1	Magnetic Plugs Service Kit
18	76-1900	2	O-Ring
19	116-8662	2	O-Ring-Check Valve
20	116-8974	4	Screw HH
21	116-8975	2	Screw-HSH
22	116-9922	2	Hydraulic Tube Kit
99	116-1373	1	Flow Test Kit ●

● Not illustrated

RH Hydro Assembly No. 126-1326

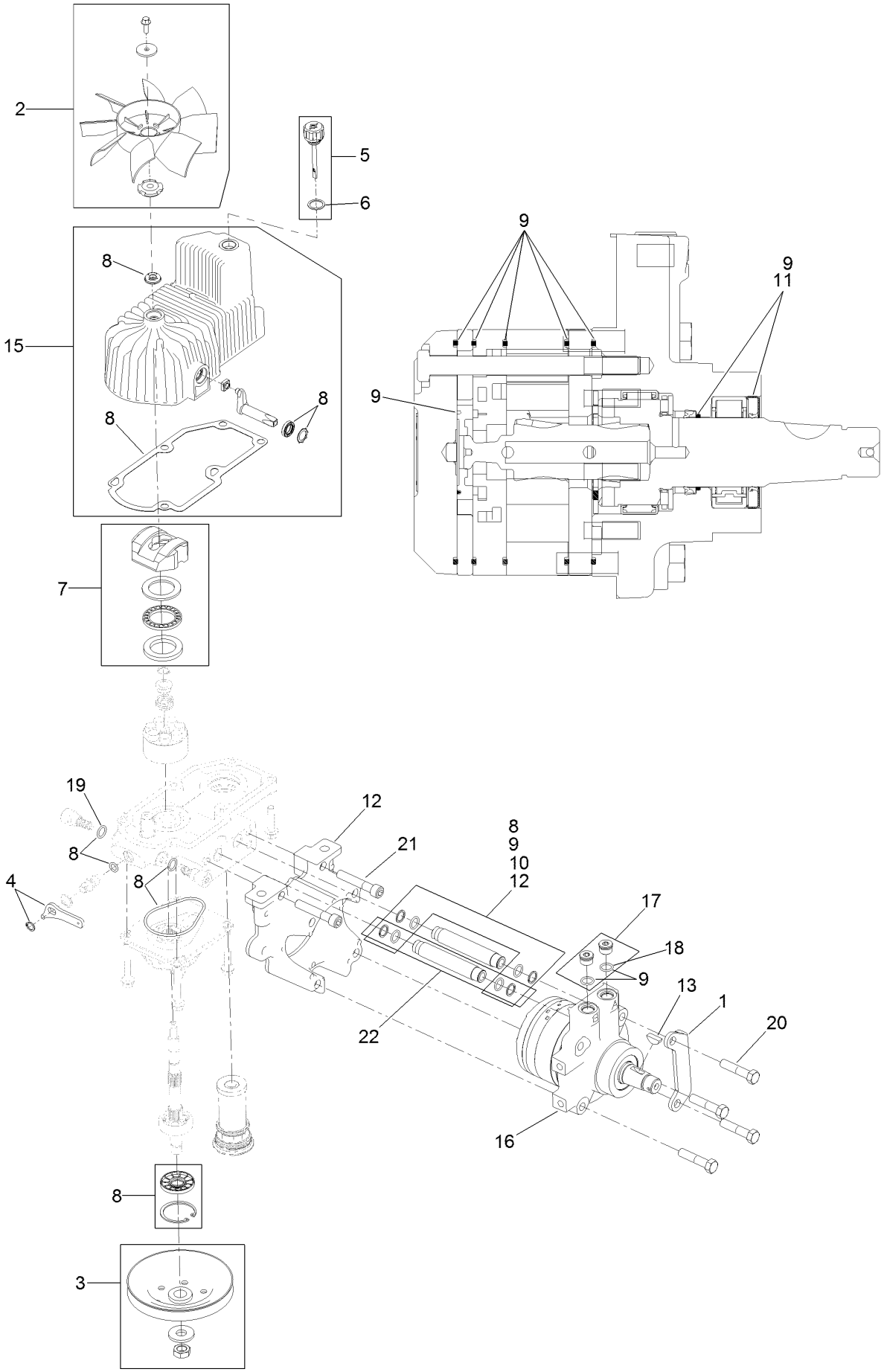

RH Hydro Assembly No. 126-1326 (continued)

Ref.	Part Number	Qty.	Description
1	116-9063	1	Mount-Shoe, Horse
2	116-0233	1	Fan Kit
3	116-0234	1	Pulley Kit
4	116-0235	1	Handle-Bypass Valve, Hydro
5	116-0236	1	Dipstick-Hydro W/Gasket
6	116-0237	1	Gasket-Dipstick, Hydro
7	116-1367	1	Swash Block Kit
8	116-1368	1	Pump Seal Kit
9	116-1369	1	Motor Seal Kit
10	116-1370	1	Tube Seal Kit
11	116-1371	1	Output Shaft Seal Kit
12	116-5469	1	Nose Cup-Uht
13	3257-42	1	Key-Woodruff
15	116-3288	1	Housing-RH
16	116-8918	1	Motor-Hydraulic, RH 280Cc
17	116-7901	1	Magnetic Plugs Service Kit
18	76-1900	2	O-Ring
19	116-8662	2	O-Ring-Check Valve
20	116-8974	4	Screw HH
21	116-8975	2	Screw-HSH
22	116-9922	2	Hydraulic Tube Kit
99	116-1373	1	Flow Test Kit ●

● Not illustrated

Parking Brake and Wheel Assembly

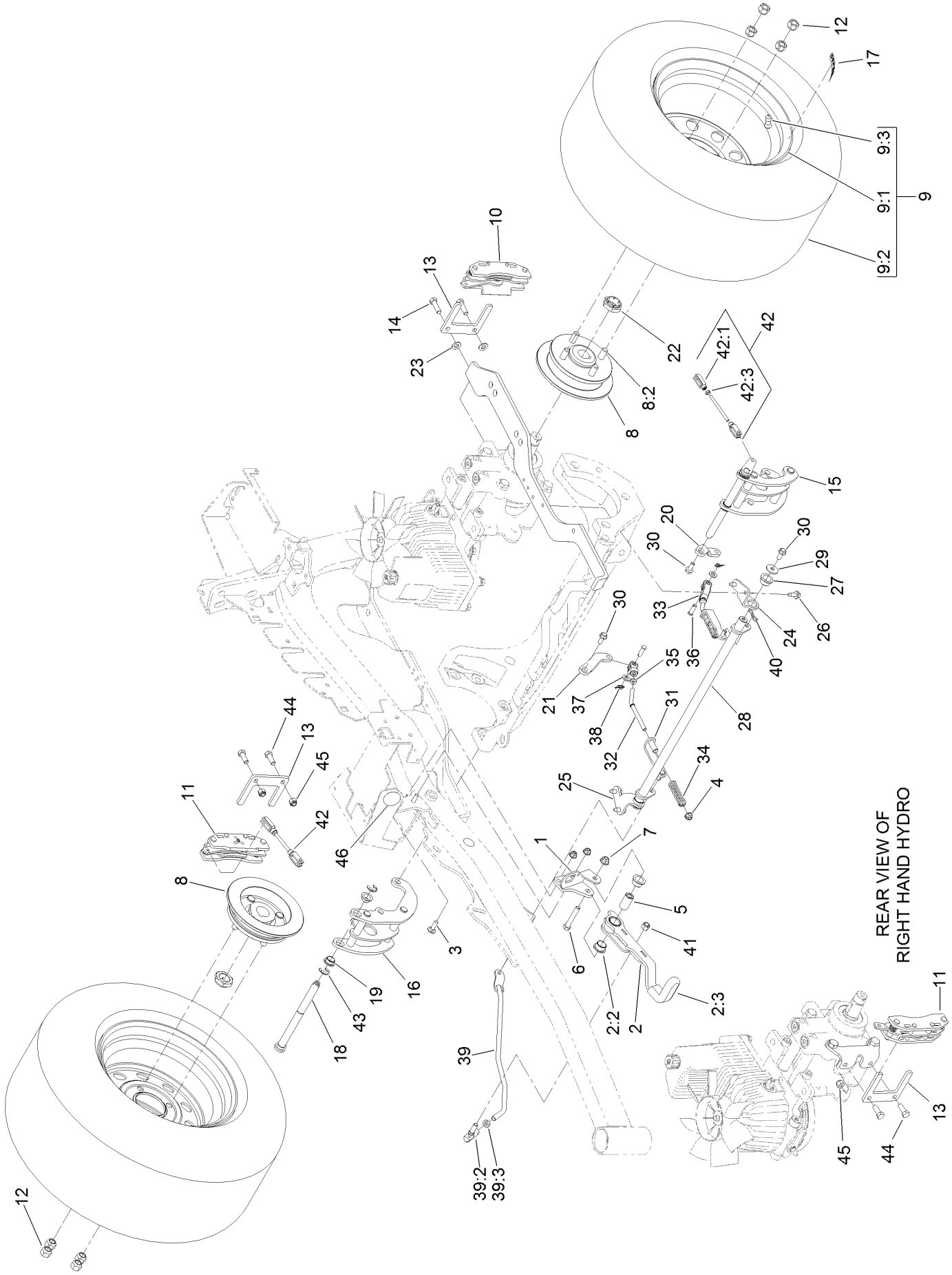

Parking Brake and Wheel Assembly (continued)

Ref.	Part Number	Qty.	Description
1	116-9096-01	1	Bracket-Mount
2	126-0970	1	Brake Lever ASM
2:2	109-8054	2	Bushing-Flange
2:3	1-633268	1	Grip-Lever
3	3230-2	2	Bolt-CARR
4	104-8300	4	Nut-Flange, NI
5	116-9117	1	Handle-Pivot, Brake
6	323-11	1	Screw-HH
7	104-8301	1	Nut-Flange, NI
8	116-1746	2	Wheel Hub ASM
8:2	116-1696	4	Stud-Wheel
9	115-3588	2	Wheel And Tire ASM
9:1	109-2871	1	Rim
9:2	1-633993	1	Tire
9:3	232-27	1	Stem-Valve
10	109-2889	1	Caliper-Brake
11	116-9103	1	Caliper-Brake, RH
12	242-50	8	Nut-Lug
13	109-0958	2	Plate-Mount, Brake
14	92-5727	2	Screw-Lock, Patch
15	116-9061	1	Mount-Bellcrank, LH
16	116-9062	1	Mount-Bellcrank, RH
17	126-2055	2	Decal-Torque Wheel Lug-Hub
18	116-9066	2	Bellcrank
19	116-9072	4	Bushing
20	126-3715	1	Arm-Inner, LH
21	126-3716	1	Arm-Inner, RH
22	116-1399	2	Locknut
23	3256-24	2	Washer-Flat
24	116-9681	1	Mount-Pivot, LH
25	116-9682	1	Mount-Pivot, RH
26	32144-70	4	Screw-HWHTF
27	109-8054	2	Bushing-Flange
28	116-9080	1	Shaft-Cross
29	115-7109	2	Washer-Flat
30	98-9940	4	Screw
31	116-9609	2	Bracket-L
32	116-9086	2	Linkage-Mid
33	126-3693	2	Yoke-Offset
34	116-9085	2	Spring-Compression
35	3220-2	2	Nut-Jam
36	1-808280	2	Pin-Clevis
37	3256-23	4	Washer-Flat
38	116-6639	2	Pin-Cotter, Locking
39	116-9102	1	Front Linkage ASM
39:2	94-7572	1	End-Tie Rod, RH
39:3	3220-3	1	Nut-HJ
40	119-1415	2	Pin-Cotter, Locking
41	3296-6	1	Nut-Lock
42	116-9071	2	Rear Linkage ASM
42:1	116-9070	2	Yoke
42:3	3220-1	1	Nut-Jam
43	32120-19	4	E-Ring
44	323-6	2	Screw-HH
45	3296-39	2	Nut-Lock, NI
46	126-4162	1	Decal-Cover

Fuel Tank Mounting Assembly

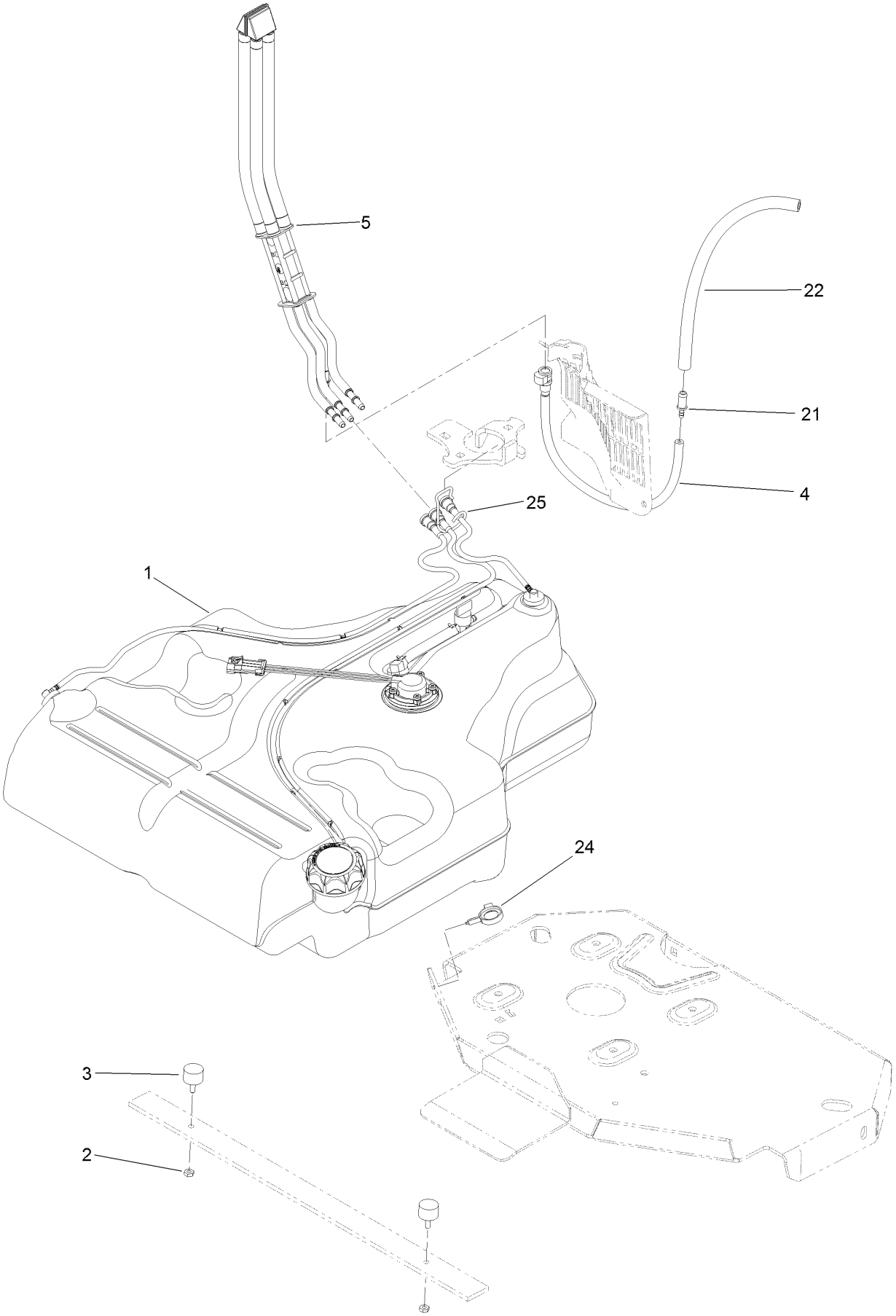

Fuel Tank Mounting Assembly (continued)

Ref.	Part Number	Qty.	Description
1	116-3979	1	Fuel Tank ASM
2	3218-1	2	Nut-Jam
3	116-6380	2	Bumper-Rubber (W/ Stud)
4	116-3977	1	Hose ASM
5	109-9491	1	Fuel Manifold Vent ASM

Ref.	Part Number	Qty.	Description
21	98-2952	1	Fitting-Straight
22	116-5087	1	Hose-Fuel
24	105-1853	1	Clamp-Hose
25	116-6005	1	Retainer-Line, Vapor

Fuel Tank Assembly No. 116-3979

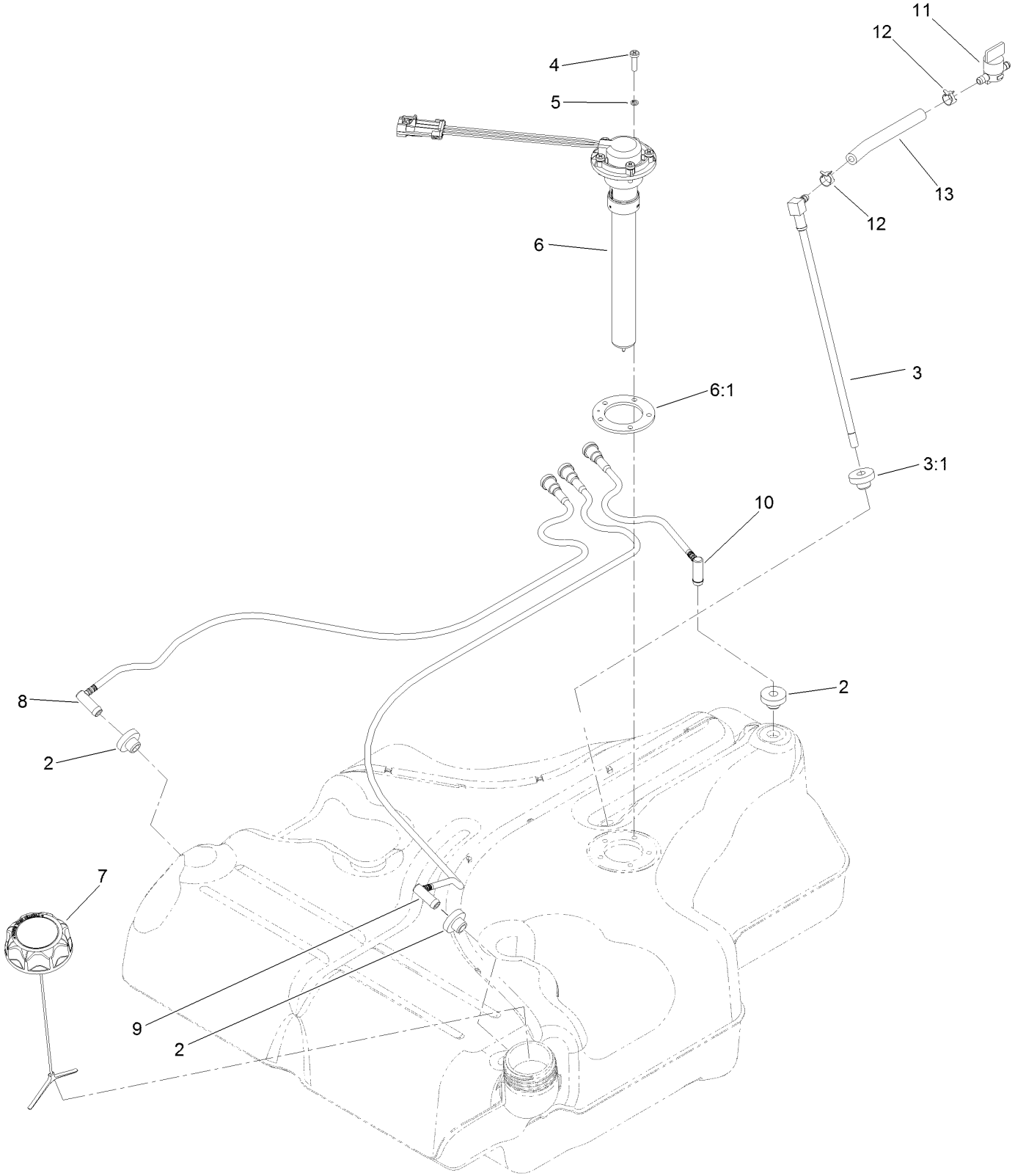

Fuel Tank Assembly No. 116-3979 (continued)

Ref.	Part Number	Qty.	Description
2	46-6560	4	Bushing
3	116-2459	1	Fuel Line Kit (With Grommet)
3:1	46-6560	1	Bushing
4	9107944	5	Screw-Pan
5	3253-17	5	Washer-Lock
6	116-0003	1	Sender-Level, Fuel
6:1	109-9620	1	Gasket-Sender, Fuel
7	126-1789	1	Cap-Fuel, Ratcheting
8	116-2460	1	RH Vent Line Kit (With Grommet)
9	116-2461	1	LH Vent Line Kit (With Grommet)
10	116-2462	1	Rear Vent Line Kit (With Grommet)
11	1-603770	1	Valve-Fuel
12	2412-98	2	Clamp-Hose
13	109-0650	1	Hose-Fuel

Seat Mounting Assembly

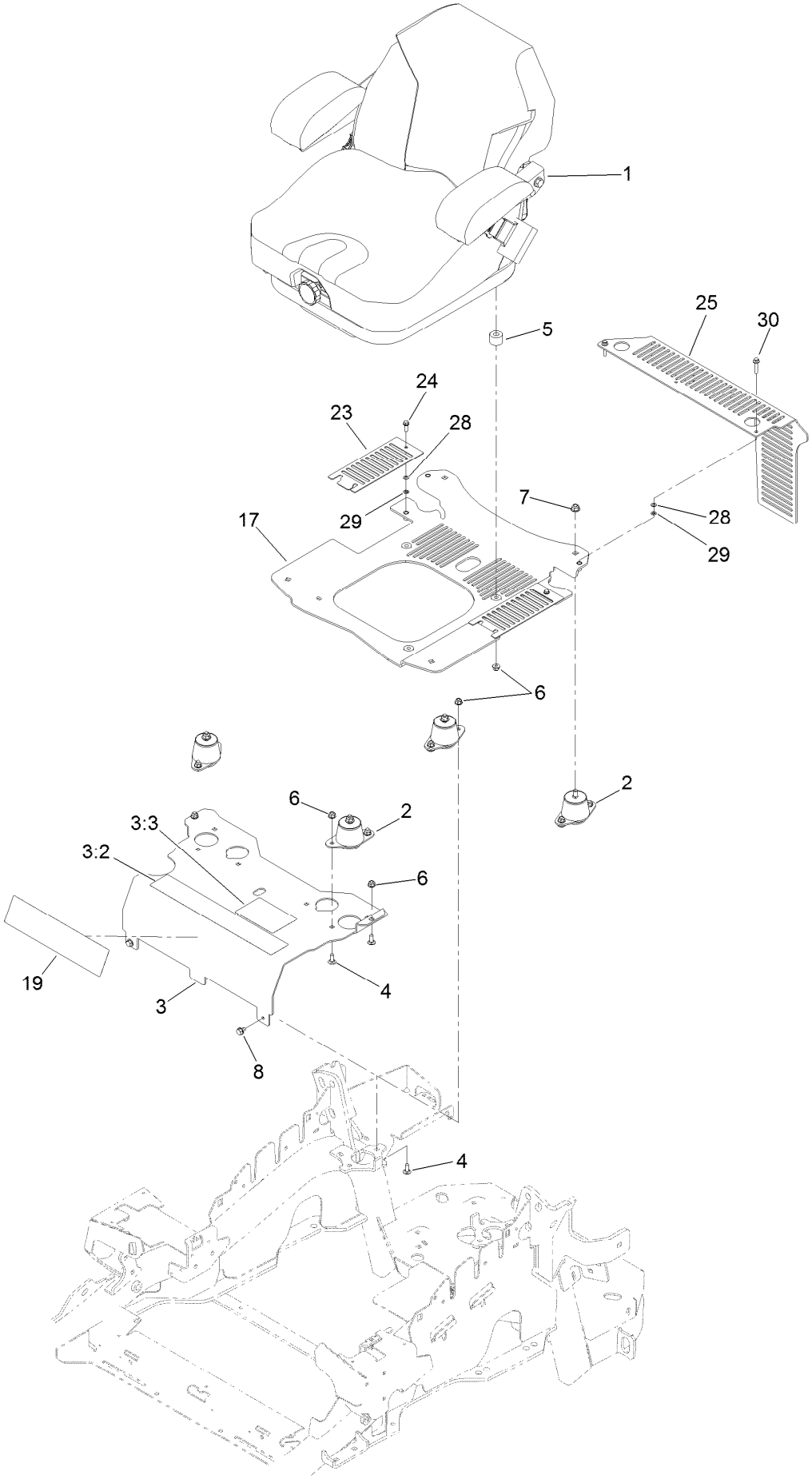

Seat Mounting Assembly (continued)

Ref.	Part Number	Qty.	Description
1	125-3107	1	Suspension Seat ASM
2	109-9034	4	Isolator-Seat
3	116-2324	1	Mount-Seat
3:2	114-4468	1	Decal-Console
3:3	125-9383	1	Decal-Service Aid
4	3230-23	11	Screw-CARR
5	116-9329	4	Spacer
6	104-8300	18	Nut-Flange, NI
7	104-8301	4	Nut-Flange, NI
8	9266934	2	Screw
17	117-0910	1	Seat Base ASM
19	120-5893	1	Decal
23	117-0901-03	2	Cover
24	32105-15	2	Screw-HWH
25	114-1548-03	1	Guard
28	3256-60	4	Washer-Flat
29	106-8737	4	Nut-Retainer
30	3234-21	2	Screw-HHF

Seat Assembly No. 125-3107

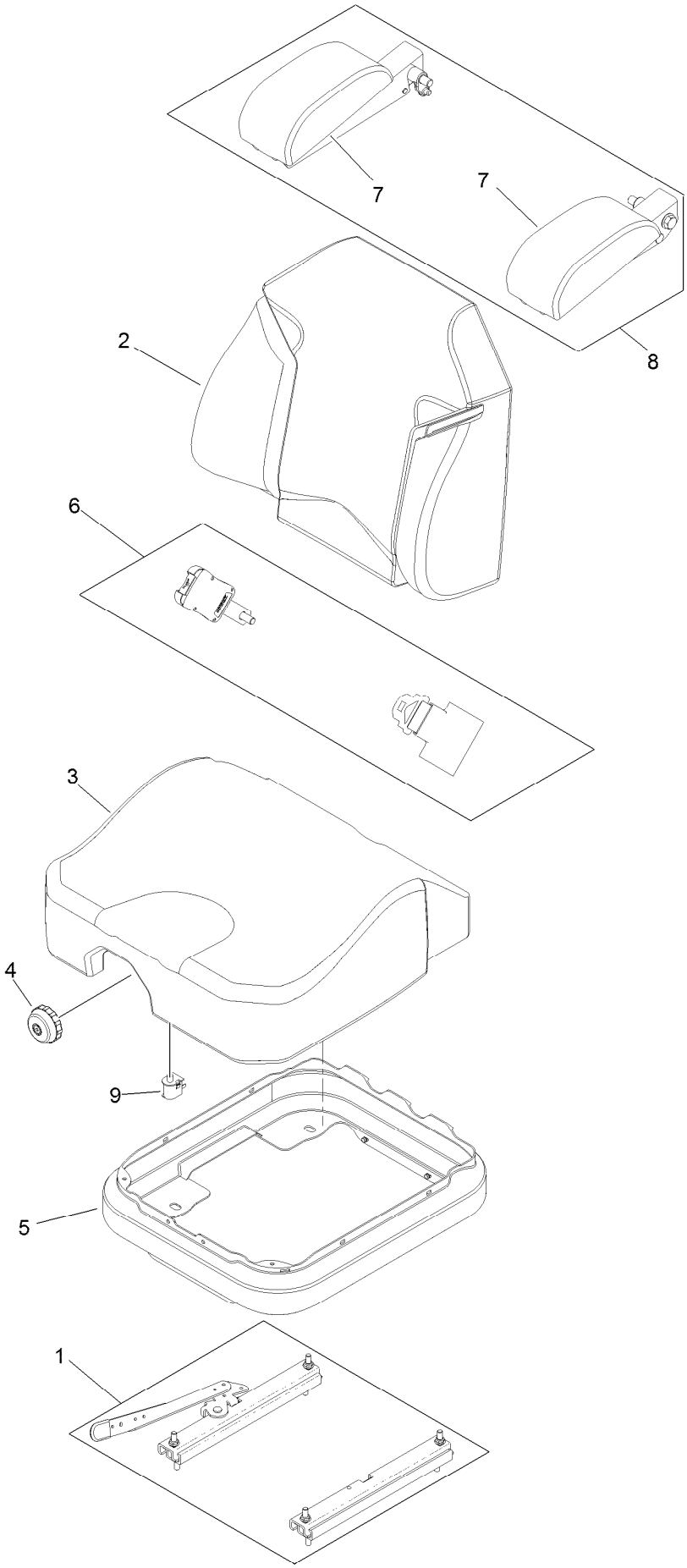

Seat Assembly No. 125-3107 (continued)

Ref.	Part Number	Qty.	Description
1	116-8910	1	Seat Track Set
2	125-3112	1	Cover-Back
3	125-3111	1	Cover-Cushion
4	116-8911	1	Knob-Adjuster
5	116-5659	1	Cover-Suspension Bellows
6	126-2061	1	Seat Belt Service Kit
7	109-9802	1	Arm Rest Pad Set
8	109-9803	1	Arm Rest Set
9	82-2190	1	Switch-Bail

Motion Control Assembly

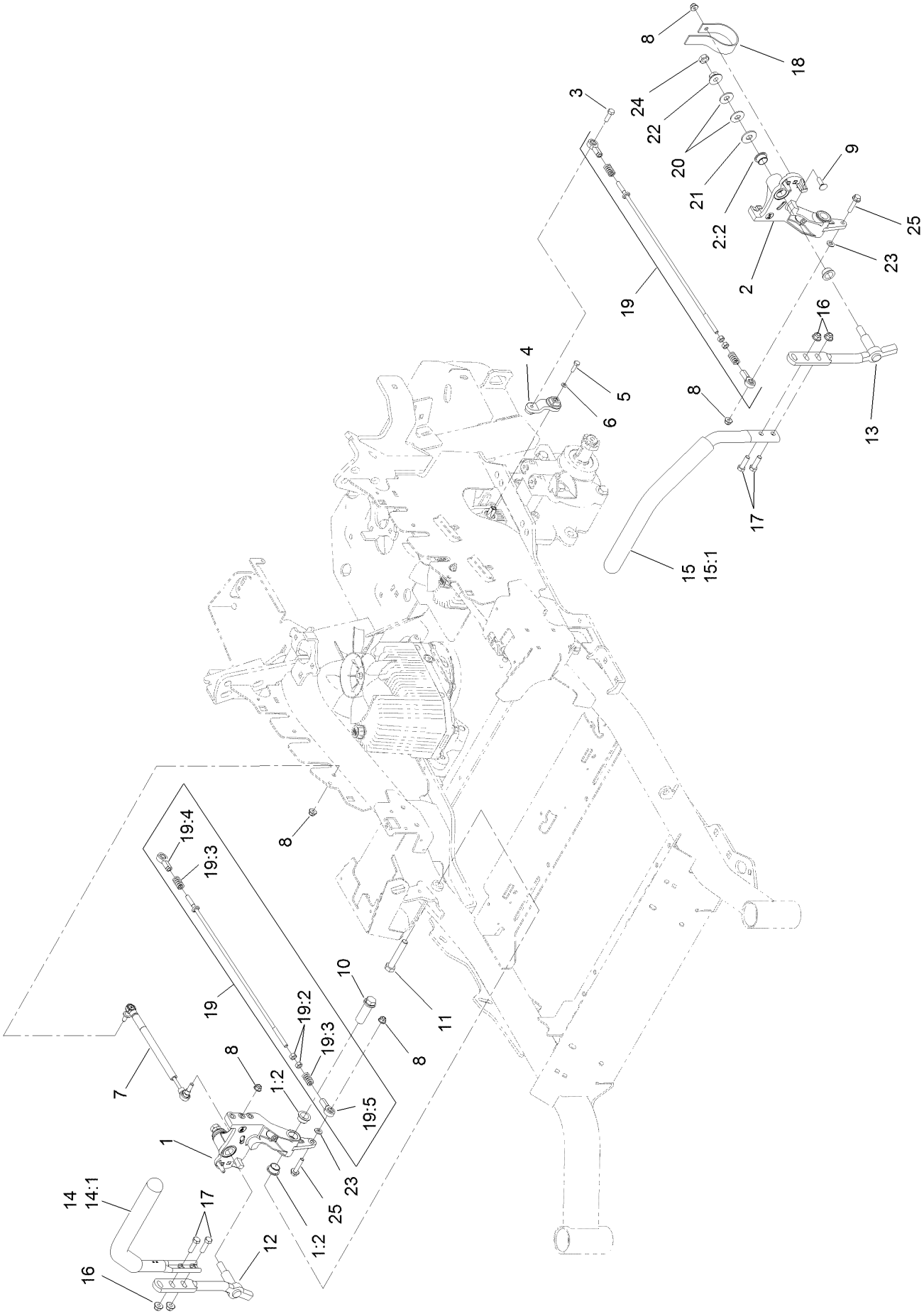

Motion Control Assembly (continued)

Ref.	Part Number	Qty.	Description
1	116-0880	1	RH Motion Control And Bushing ASM
1:2	109-8054	4	Bushing-Flange
2	116-0881	1	LH Motion Control And Bushing ASM
2:2	109-8054	4	Bushing-Flange
3	116-0648	2	Screw-HH, Thread Locking ●
4	109-4581	2	Arm-Control, Pump
5	9080046	2	Screw-HH ●
6	1-303435	2	Washer-Spring
7	116-0027	2	Damper-Control, Motion
8	104-8300	8	Nut-Flange, NI
9	3230-2	2	Bolt-CARR
10	109-5891	2	Hub-Threaded
11	325-12	2	Screw-HH
12	116-0039	1	Lever-Control Motion, RH
13	116-0040	1	Lever-Control Motion, LH

Ref.	Part Number	Qty.	Description
14	109-6589	1	RH Steering Handle ASM
14:1	109-5668	1	Grip-Control, Lever
15	109-6590	1	LH Steering Handle ASM
15:1	109-5668	1	Grip-Control, Lever
16	104-8301	4	Nut-Flange, NI
17	323-7	4	Screw-HH
18	109-5575	2	Spring-Leaf
19	109-8106	2	Front Pump Linkage ASM
19:2	3219-2	2	Nut-Hex
19:3	1-323245	2	Spring-Compression
19:4	1-633152	1	Balljoint-LH
19:5	1-543017	1	Balljoint-RH
20	109-9505	4	Washer-Spring
21	3256-6	2	Washer-Flat
22	32128-56	2	Nut-HF
23	3256-23	2	Washer-Flat
24	3218-5	2	Nut-Jam
25	115-1794	2	Screw-HHF

● Use Pro-Lock, Nut Type (P/N 1-840022, .5ml tube) on threads.

Fender, Console and Control Assembly

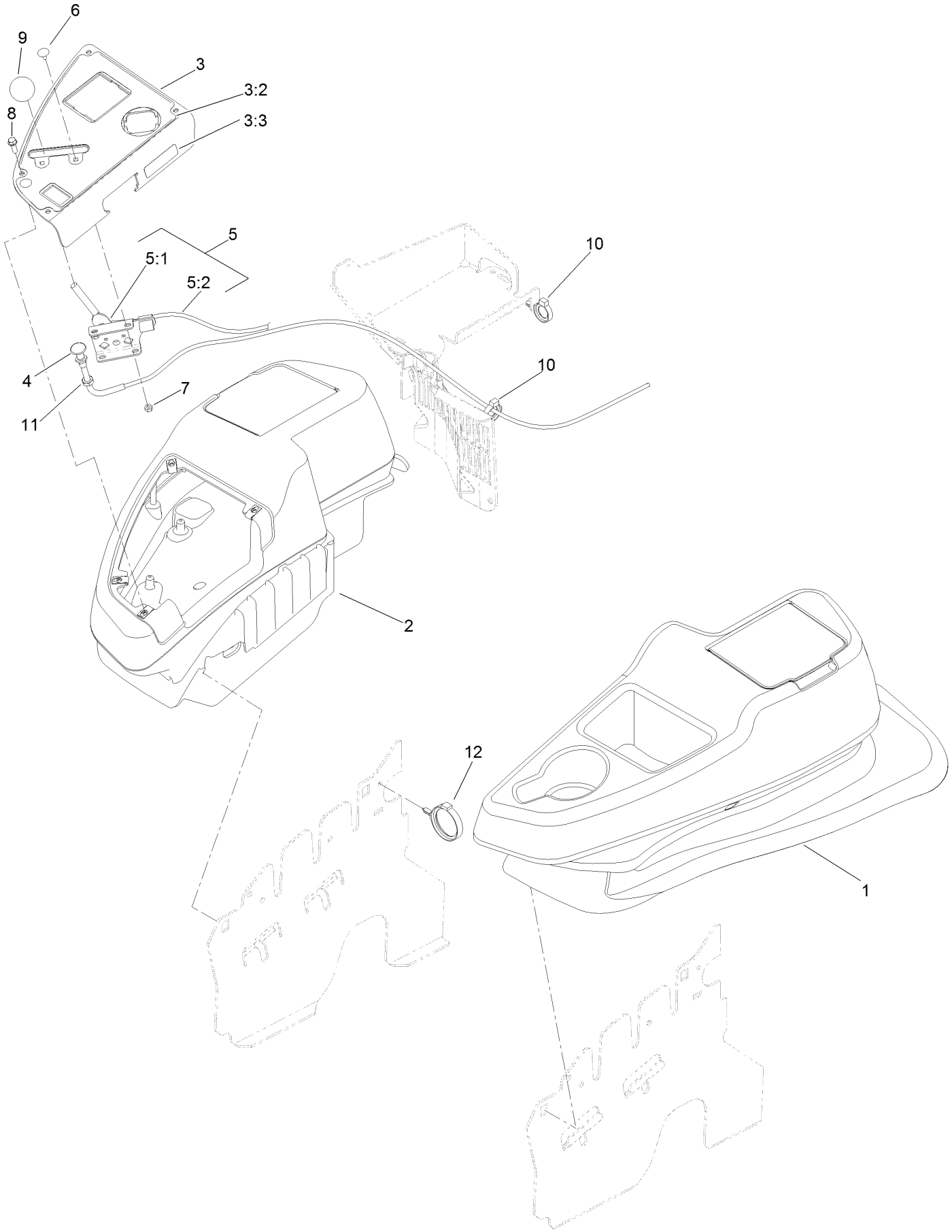

Fender, Console and Control Assembly (continued)

Ref.	Part Number	Qty.	Description
1	115-7401	1	LH Console ASM
2	115-7400	1	RH Console ASM
3	114-9836	1	Control Panel ASM
3:2	120-5897	1	Decal-Panel, Control
3:3	114-4466	1	Decal-Fuses
4	115-2753	1	Control-Choke
5	110-5727	1	Throttle Control ASM
5:1	112-2334	1	Lever-Throttle
5:2	110-5728	1	Cable-Throttle
6	1-807513	2	Bolt-CARR
7	3296-2	2	Nut-Lock, NI
8	32105-15	4	Screw-HWH
9	1-603175	1	Knob-Ball
10	105-1853	1	Clamp-Hose
11	3220-3	1	Nut-HJ
12	117-7817	1	Clamp-Harness

LH Console Assembly No. 115-7401

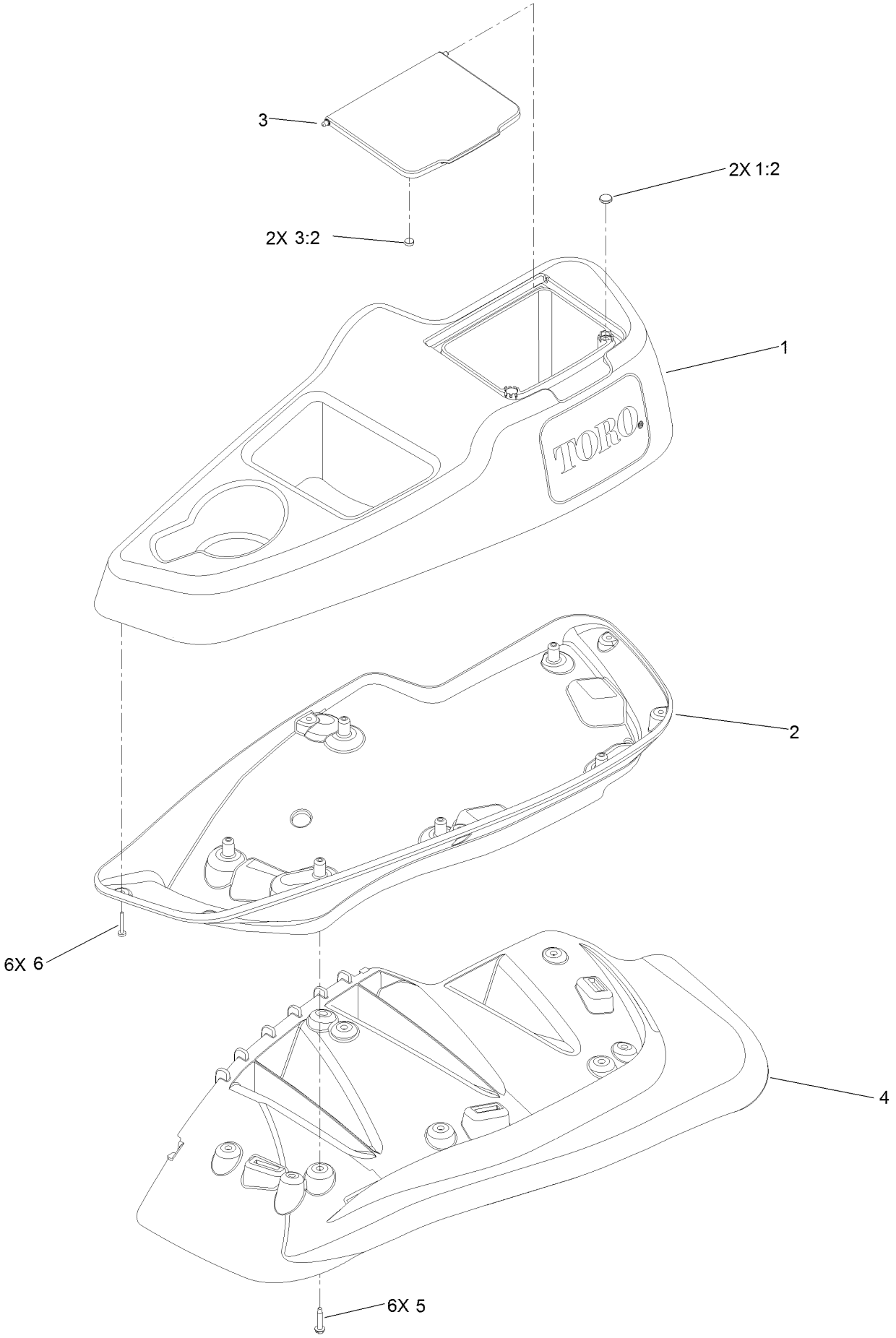

LH Console Assembly No. 115-7401 (continued)

Ref.	Part Number	Qty.	Description
1	114-1539	1	LH Wide Console Top ASM
1:2	117-0883	2	Puck
2	115-3641	1	Console-Lower, LH Wide
3	114-1537	1	Wide Lid ASM
3:2	114-5896	2	Magnet
4	109-9085	1	Fender-Wide, LH
5	32144-89	6	Screw-Thread Forming
6	117-0347	6	Screw-PPH

RH Console Assembly No. 115-7400

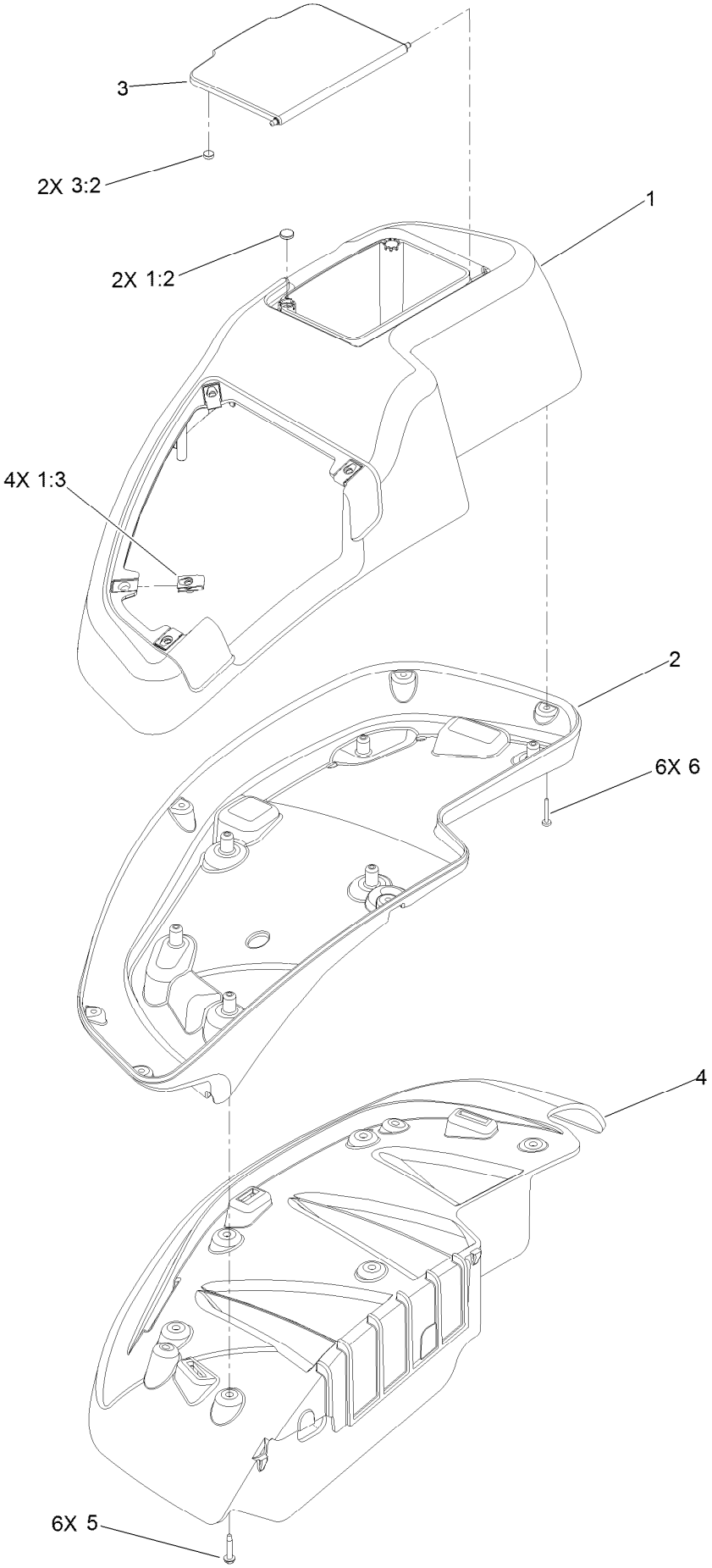

RH Console Assembly No. 115-7400 (continued)

Ref.	Part Number	Qty.	Description
1	114-1538	1	RH Wide Top Console ASM
1:2	117-0883	2	Puck
1:3	107069	4	Clip
2	115-3643	1	Console-Lower, RH Wide
3	114-1537	1	Wide Lid ASM
3:2	114-5896	2	Magnet
4	109-9083	1	Fender-Wide, RH
5	32144-89	6	Screw-Thread Forming
6	117-0347	6	Screw-PPH

Electrical System Assembly

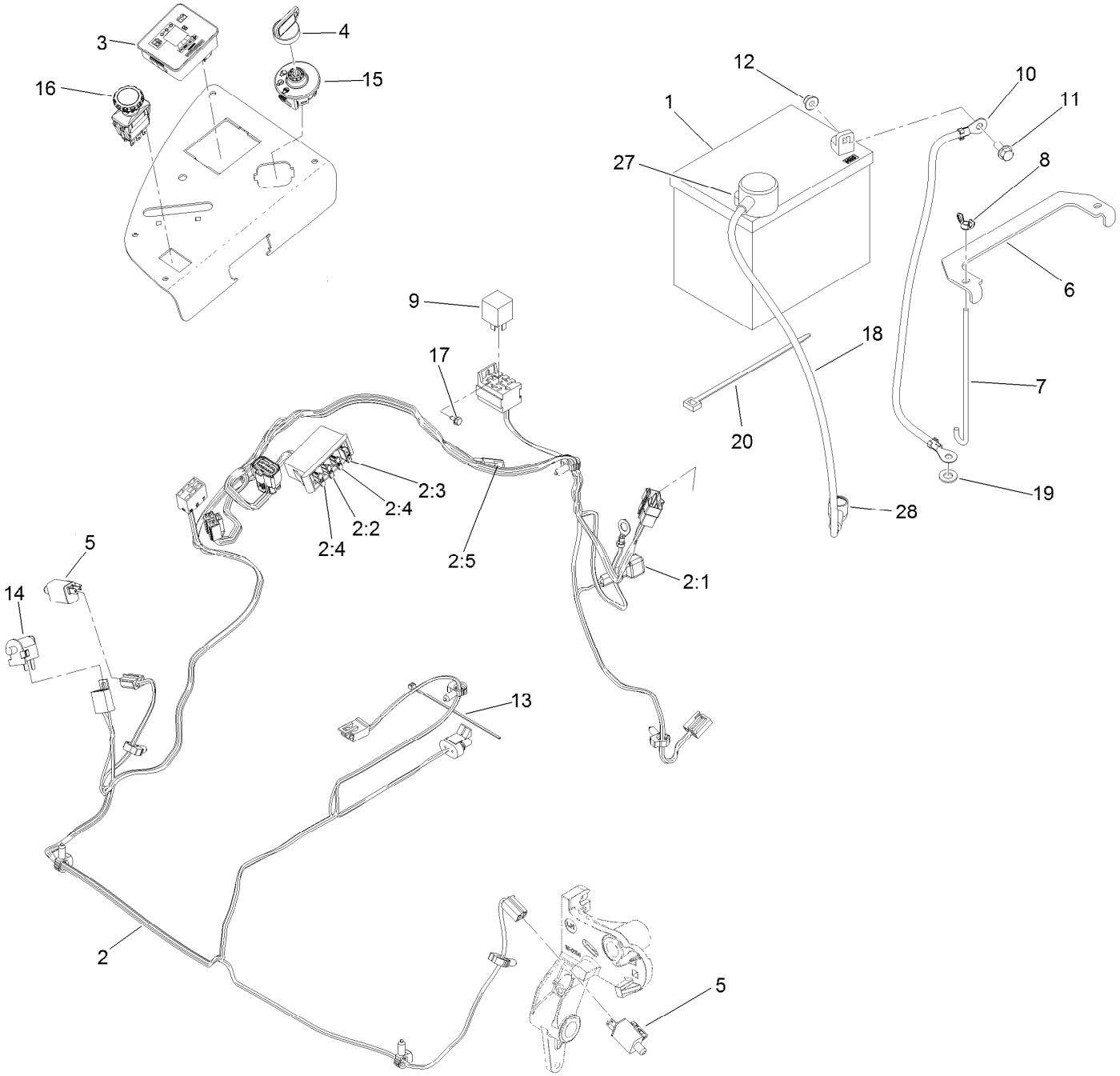

Electrical System Assembly (continued)

Ref.	Part Number	Qty.	Description
1	104-8162	1	Battery-Dry
2	116-6009	1	Harness-Wire, Main ●
2:1	103-3895	1	Diode-Tvs
2:2	218-578	1	Fuse-Blade, 10 Amp
2:3	109355	1	Fuse-Blade, 15 Amp
2:4	109102	2	Fuse-Blade, 25 Amp
2:5	116-0053	1	Cap-Plug
3	117-3882	1	Fuel/Hour Meter ASM
4	63-8360	1	Key-Ignition
5	110-6765	2	Switch
6	116-0042-03	1	Strap-Tie Down, Battery
7	1-633651	2	Bolt-Holddown
8	1-543792	2	Wingnut
9	1-643275	1	Relay
10	114-1218	1	Cable-Battery, Negative
11	3234-5	2	Screw-HHF
12	104-8300	2	Nut-Flange, NI
13	1-303287	3	Tie-Cable
14	82-2190	1	Switch-Bail
15	117-2221	1	Switch-Ignition
16	116-0124	1	Switch-PTO, 10A
17	104-2065	1	Screw-HWH
18	115-3864	1	Cable-Battery, Positive
19	3256-24	1	Washer-Flat
20	1-303335	1	Tie-Plastic
27	109-2407	1	Insulator-Battery
28	1-543393	1	Insulator-Solenoid

● Use dielectric grease on all unsealed connectors and terminals only. Do not apply in sealed connectors.

Deck Lift Assembly

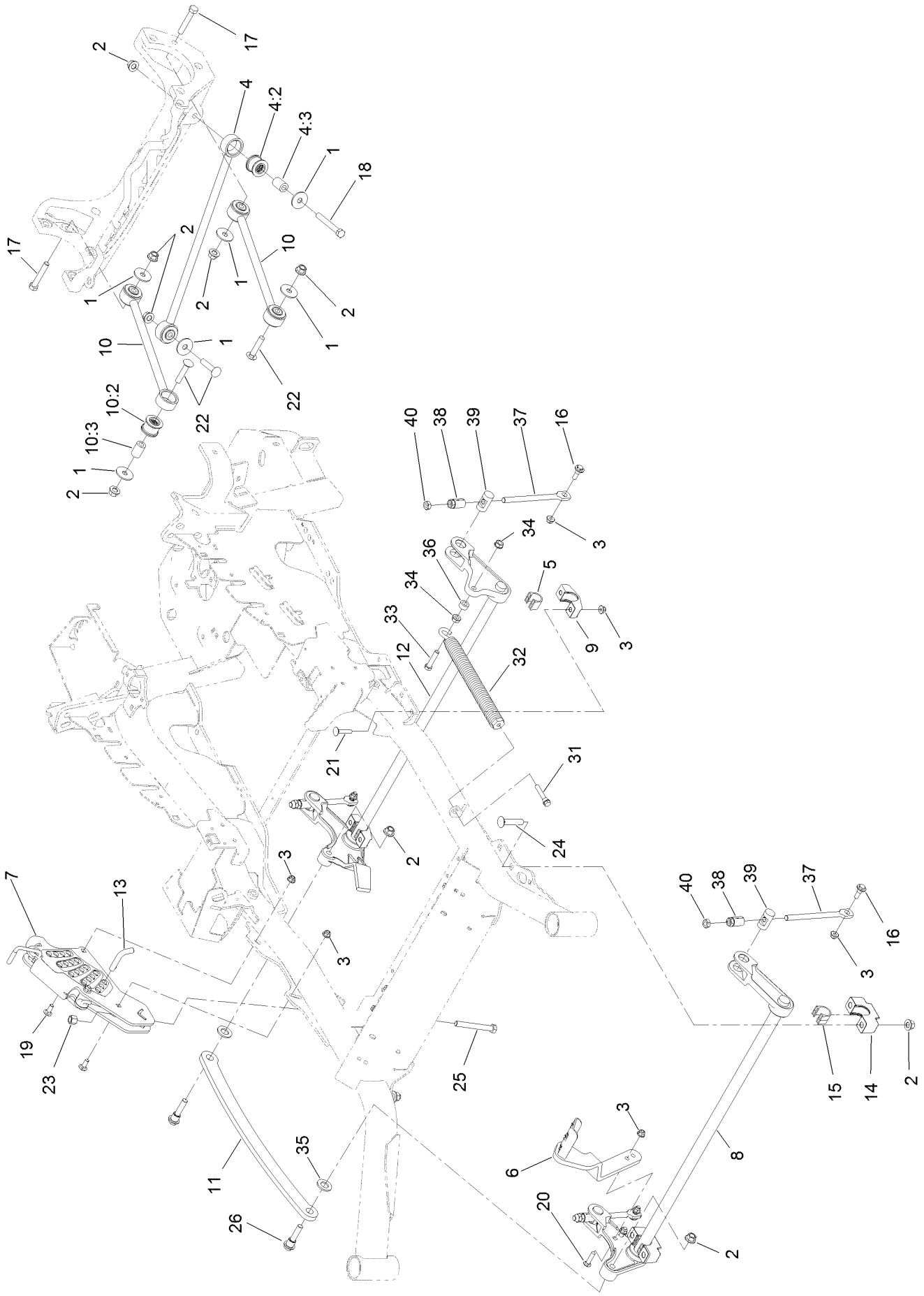

Deck Lift Assembly (continued)

Ref.	Part Number	Qty.	Description
1	86-1990	6	Washer-Thrust
2	99-5107	12	Nut-Lock
3	104-8301	12	Nut-Flange, NI
4	109-5013	1	Panhard Rod ASM
4:2	109-5009	2	Bushing-Suspension, Rubber
4:3	109-5010	2	Spacer
5	109-7173	2	Bearing-Cross Shaft, Rear
6	116-1919-01	1	Lever-Foot
7	117-3842	1	Height-Of-Cut ASM
8	126-2477-03	1	Decklift-Front
9	116-0818-03	2	Support-Cross Shaft, Rear Bearing
10	109-7952	2	Deck Strut ASM
10:2	109-5009	2	Bushing-Suspension, Rubber
10:3	109-5010	2	Spacer
11	116-0797-03	1	Link-Lift, Deck
12	116-2645-03	1	Lift-Deck, Rear
13	116-5584	1	Pin-HOC
14	109-9409	2	Support-Cross Shaft, Front Bearing
15	109-9410	2	Bearing-Cross Shaft, Front
16	109-9840	4	Screw-Shoulder, HHF
17	325-12	2	Screw-HH
18	325-17	1	Screw-HH
19	3231-2	2	Bolt-CARR
20	3231-4	2	Screw-CARR
21	3231-5	4	Screw-CARR
22	3233-34	3	Screw-CARR
23	3296-23	1	Nut-Lock, NI
24	116-1700	4	Bolt-CARR
25	116-0559	1	Bolt-TAP
26	116-2022	2	Screw-HHF, Shoulder
31	92-7674	1	Bolt-Shoulder
32	116-0000	1	Extension Spring ASM
33	109-9065	1	Screw-HH
34	32128-37	2	Nut-HF
35	3256-28	2	Washer-Flat
36	116-2695	1	Spacer
37	109-8007	4	Link-Adjuster, Deck Lift
38	109-7840	4	Adjuster-Lift, Deck
39	109-8353	4	Trunnion
40	3218-5	4	Nut-Jam

Height-of-Cut Assembly No. 117-3842

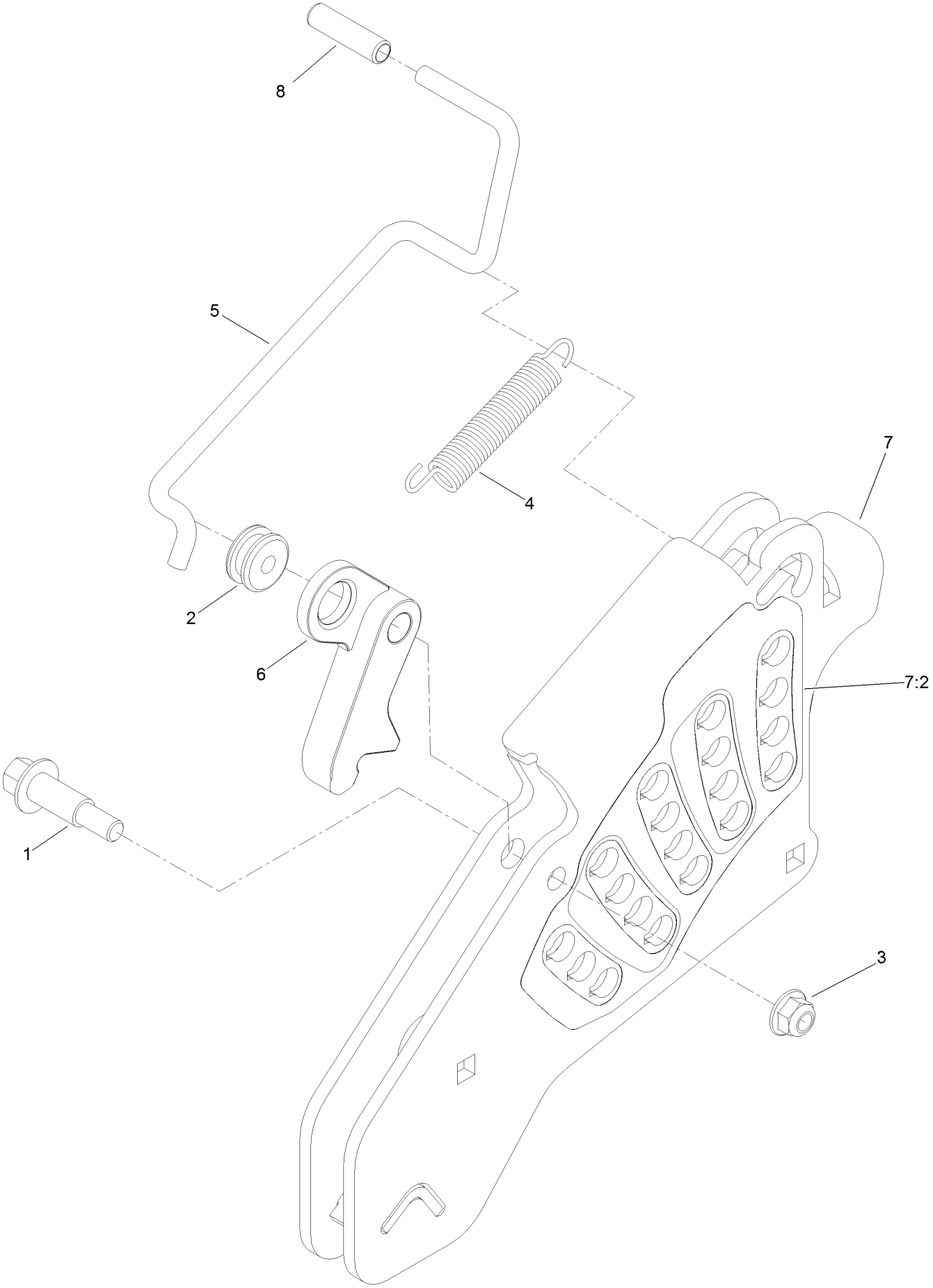

Height-of-Cut Assembly No. 117-3842 (continued)

Ref.	Part Number	Qty.	Description
1	62-1330	1	Bolt-Shoulder
2	109-7130	1	Grommet
3	104-8301	1	Nut-Flange, NI
4	109-7124	1	Spring-Extension
5	109-7128	1	Rod-Lock, Transport
6	116-0118	1	Pawl-Transport, HOC
7	117-3837	1	Plate-Height Adjuster
7:2	114-4470	1	Decal-HOC
8	109-8250	1	Grip-Lever

Engine, Muffler and Clutch Assembly

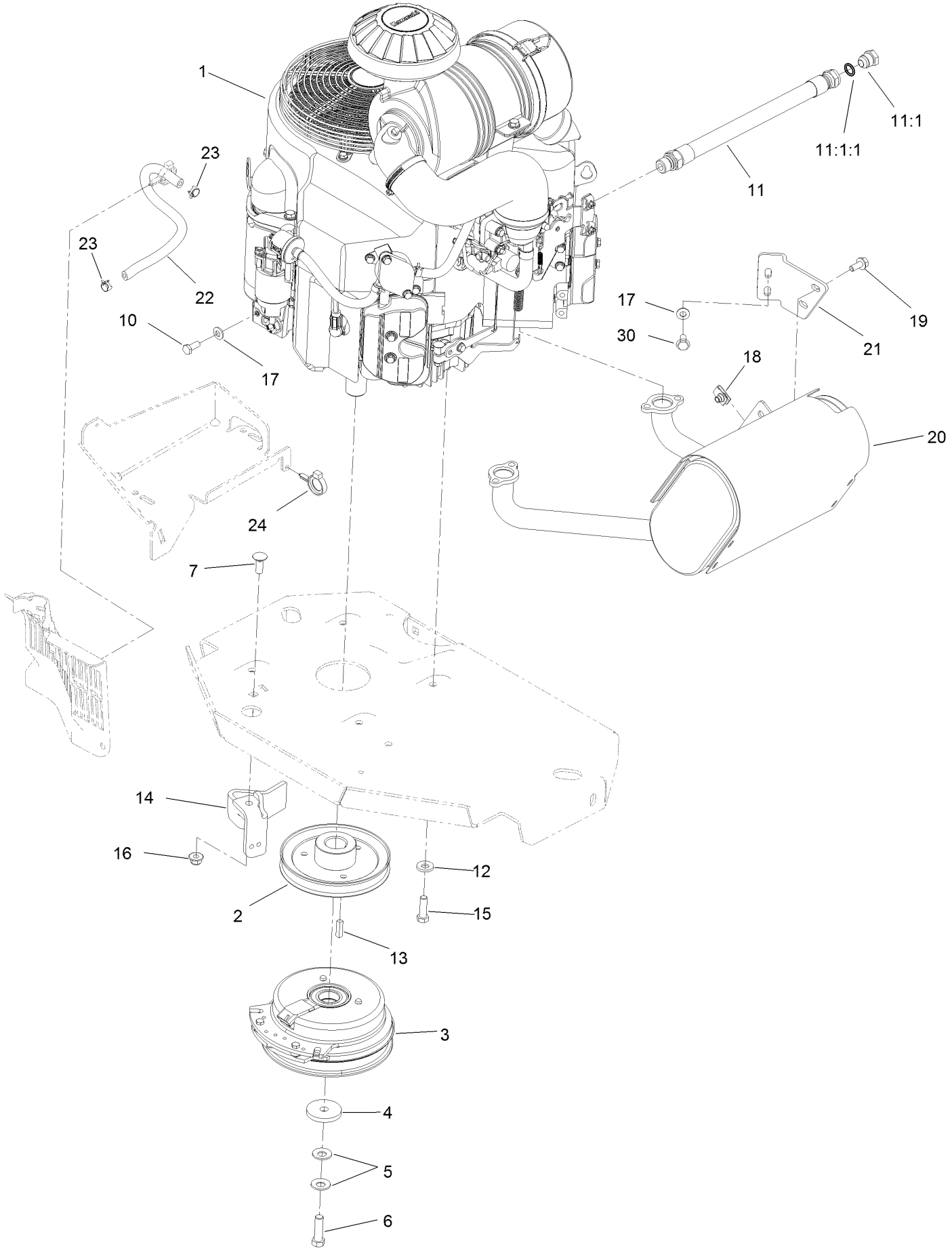

Engine, Muffler and Clutch Assembly (continued)

Ref.	Part Number	Qty.	Description
1		1	Engine-Kawasaki, Fx801V-S04-R ●■
2	109-9905	1	Sheave
3	116-1620	1	Clutch Kit
4	109-6919	1	Washer-Clutch
5	1-603610	2	Washer-Spring
6	109-9761	1	Screw-HH ▲
7	3231-22	1	Screw-CARR
10	33114-020	1	Screw-HH
11	116-4924	1	Engine Oil Drain Hose ASM
11:1	353-508	1	Plug-HH
11:1:1	237-42	1	O-Ring
12	98-5975	4	Washer-Belleville
13	1-807259	1	Key
14	116-2612-01	1	Clutch-Anchor
15	323-7	4	Screw-HH
16	104-8301	1	Nut-Flange, NI
17	1-303334	3	Washer-Spring
18	94-2413	2	U-Nut
19	3234-5	2	Screw-HHF
20	116-1712	1	Muffler
21	116-0203	1	Bracket-Muffler
22	109-0296	1	Hose-Fuel
23	2412-98	2	Clamp-Hose
24	105-1853	1	Clamp-Hose
30	95-4184	2	Screw-HHF

● Not serviced separately
▲ Use Pro-Lock, Nut Type (P/N 1-840022, .5ml tube) on threads.
■ Obtain parts from www.kawpowerepc.com

Deck Assembly

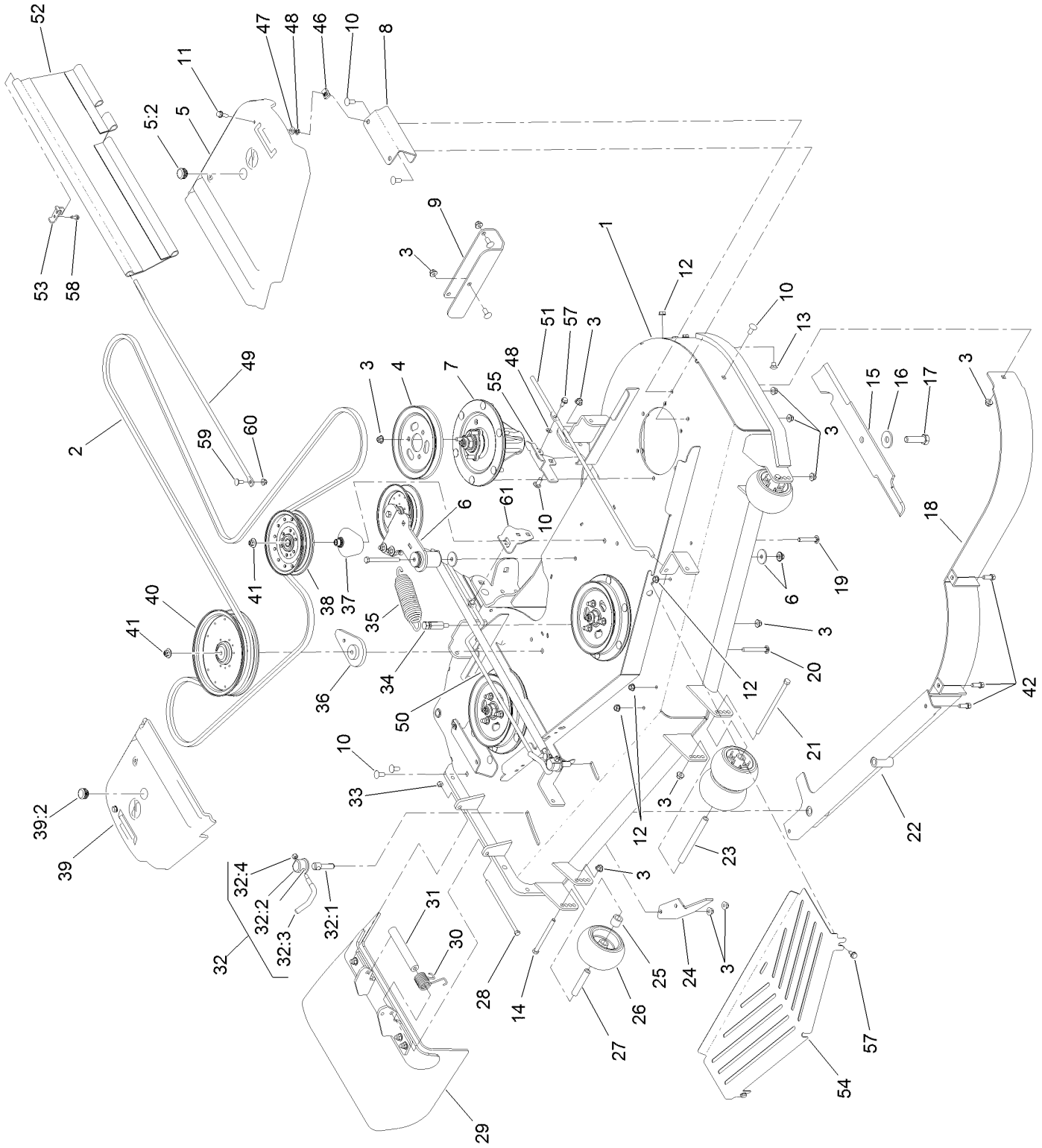

Deck Assembly (continued)

Ref.	Part Number	Qty.	Description
1	131-7683	1	Deck ASM
2	114-5858	1	Belt-V
3	104-8301	42	Nut-Flange, NI
4	105-7734	3	Pulley
5	117-7816	1	LH Belt Cover ASM
5:2	117-3824	1	Plug-Plastic
6		1	Idler Arm ASM ●
7	119-8560	3	Spindle ASM
8	114-5882-01	2	Bracket-Cover, Belt
9	121-8031-01	1	Plate-Skid
10	3231-27	13	Screw-CARR
11	3234-29	2	Screw-HHF
12	3290-357	6	Nut-HHF, Whiz
13	108-5387	3	Screw-CARR
14	323-23	2	Screw-HH
15	105-7718-03	3	Blade-Hi Flow
16	103-0865	3	Washer-Blade Bolt, Heavy
17	51-4060	3	Screw-Blade
18	114-5842-01	1	Baffle
19	3231-40	1	Bolt-CARR, Short Neck
20	3231-42	1	Screw-CARR
21	108-5388	1	Screw-HH
22	105-7669-01	1	Baffle
23	98-5967	1	Spacer-Wheel
24	106-3216-01	1	Baffle-Discharge
25	98-7913	2	Tube-Spacer
26	1-603299	4	Roller-Scalp, Anti
27	98-7912	2	Tube-Spanner
28	322-50	1	Screw-HH
29	108-2792	1	Rubber Deflector ASM
30	108-4052	1	Spring-Torsion
31	105-4622	1	Spacer
32	107-1664	2	Lever ASM
32:1	106-3239	1	Screw-Lock
32:2	107-1644	1	Cap-Lock
32:3	106-3241	1	Lever-Lock
32:4	3296-29	1	Nut-Lock, NI
33	3296-29	1	Nut-Lock, NI
34	114-5867	1	Anchor-Spring, Tall
35	116-6317	1	Spring-Extension
36	109-9416	1	Spacer-Idler
37	109-2872	1	Spacer-Pulley
38	116-4670	1	Pulley-Idler, Flat
39	117-7815	1	RH Belt Cover ASM
39:2	117-3824	1	Plug-Plastic
40	109-8590	1	Pulley-Idler
41	109-6658	2	Nut-Flange, NI
42	92-1624	3	Screw-HWH
46	94-2413	2	U-Nut
47	73-0041	2	Washer-Thrust
48	117-2749	4	Nut-Push
49	131-3987	2	Rod-Support, Upper
50	131-3990	1	Rod Support, RH Lower
51	131-3989	1	Rod Support, LH Lower
52	131-4009	2	Guard Side
53	131-4194-03	2	Bracket-Mounting, Upper
54	131-3981-03	1	Shield-Front
55	131-4196-03	1	Bracket-Mounting, LH Rear
57	32144-70	4	Screw-HWHTF
58	32144-10	2	Screw-HWH
59	3230-23	2	Screw-CARR
60	104-8300	2	Nut-Flange, NI
61	132-0920-03	1	Bracket-Mounting, RH Rear

● Not serviced separately

Deck Decal Assembly No. 131-7683

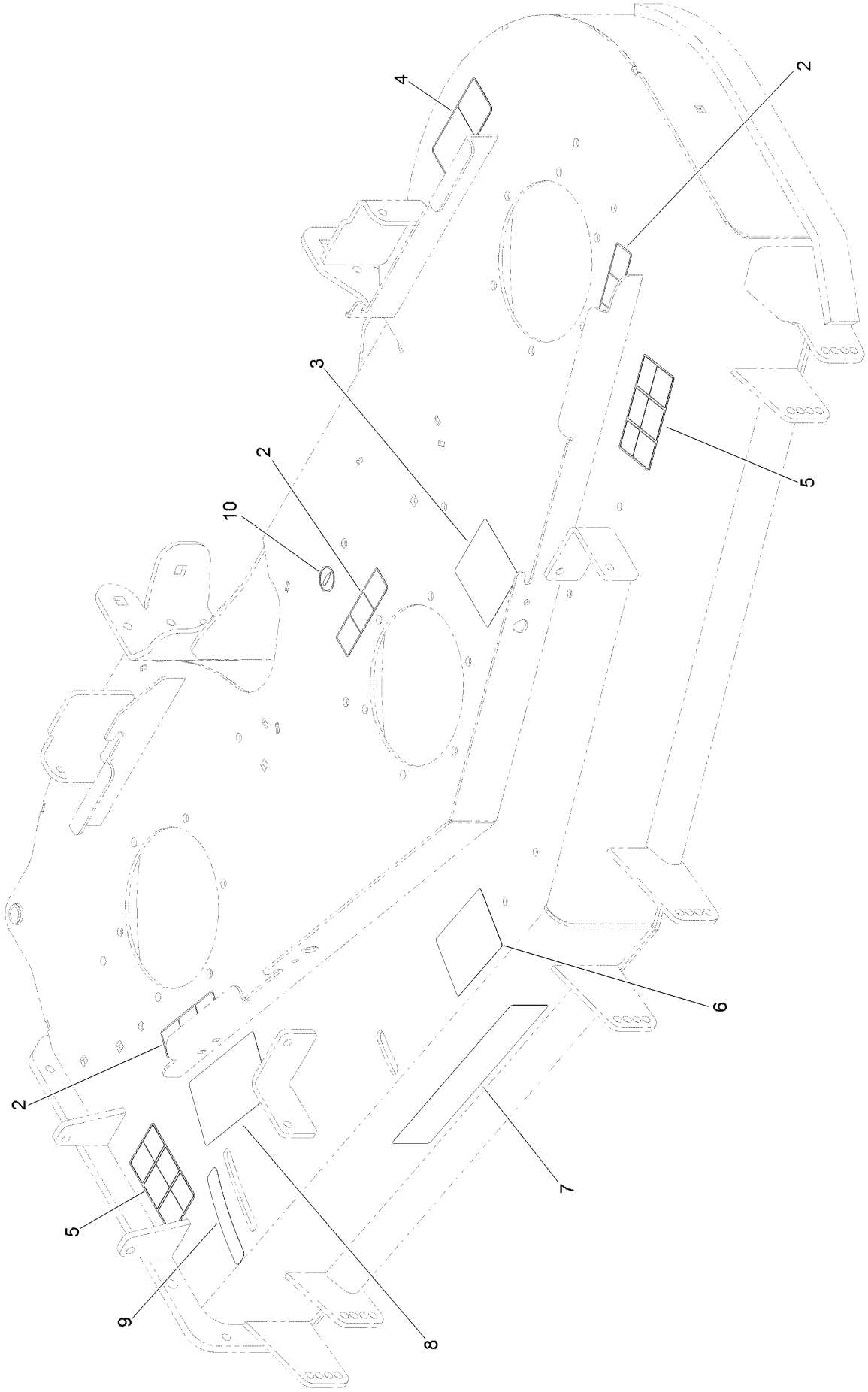

Deck Decal Assembly No. 131-7683 (continued)

Ref.	Part Number	Qty.	Description
2	112-9028	3	Decal-Cover Missing
3	115-7445	1	Decal-Routing, Deck Belt
4	93-7818	1	Decal-Torque, Blade Bolt
5	117-3848	2	Decal-Danger
6	127-0326	1	Decal-Anti Scalp
7	107-1619	1	Decal
8	110-2068	1	Decal-Adjustment, Baffle
9	110-2067	1	Decal-Setting, Baffle
10	58-6520	1	Decal-Grease

Idler Assembly

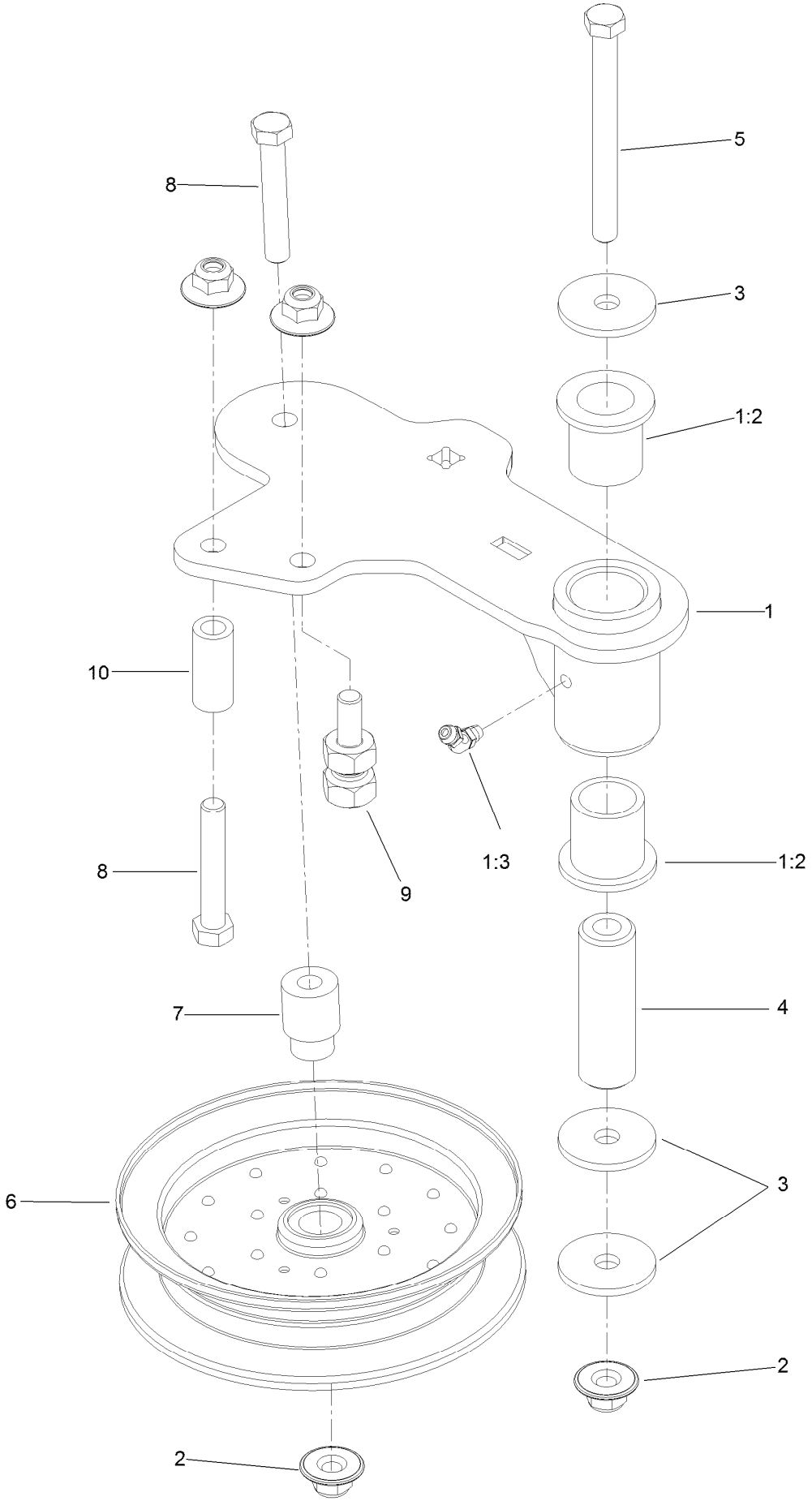

Idler Assembly (continued)

Ref.	Part Number	Qty.	Description
1	114-5870	1	Idler Arm ASM
1:2	1-303514	2	Bearing-Flanged
1:3	1481	1	Fitting-Grease
2	109-6658	4	Nut-Flange, NI
3	1-213069	3	Washer
4	114-5848	1	Spacer-Plain
5	98-5961	1	Screw-HH
6	116-4668	1	Idler-Pulley, Flanged
7	112-4212	1	Mount-Pulley
8	323-11	2	Screw-HH
9	114-5866	1	Anchor-Spring, Short
10	104-0151	1	Spacer

Spindle Assembly No. 119-8560

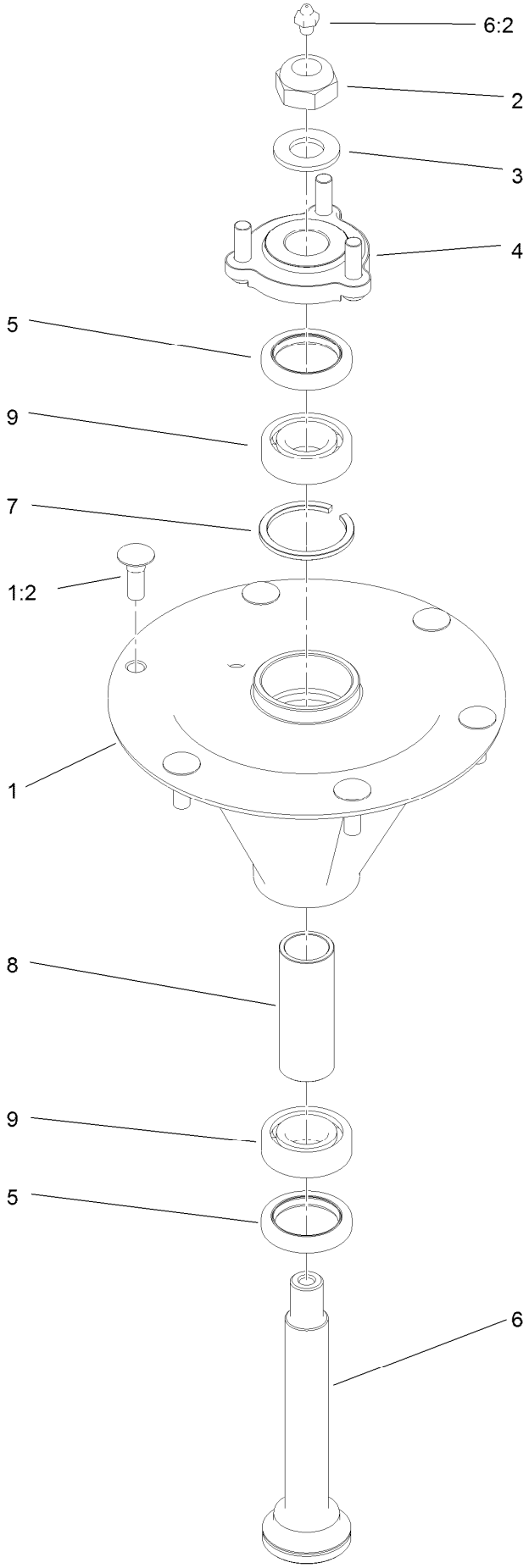

Spindle Assembly No. 119-8560 (continued)

Ref.	Part Number	Qty.	Description
1		1	Spindle Housing And Studs ASM ●
1:2	114-8195	6	Bolt-Ribbed Neck
2	3296-67	1	Nut-Lock, NI
3	92-5836	1	Washer
4	117-6172	1	Spindle Hub ASM
5	253-133	2	Seal-Oil
6	119-8527	1	Shaft-Spindle
6:2	302-2	1	Fitting-Grease
7	119-8532	1	Snap Ring
8	117-6184	1	Spacer
9	119-8558	2	Bearing-Noseal

● Not serviced separately

Rubber Deflector Assembly No. 108-2792

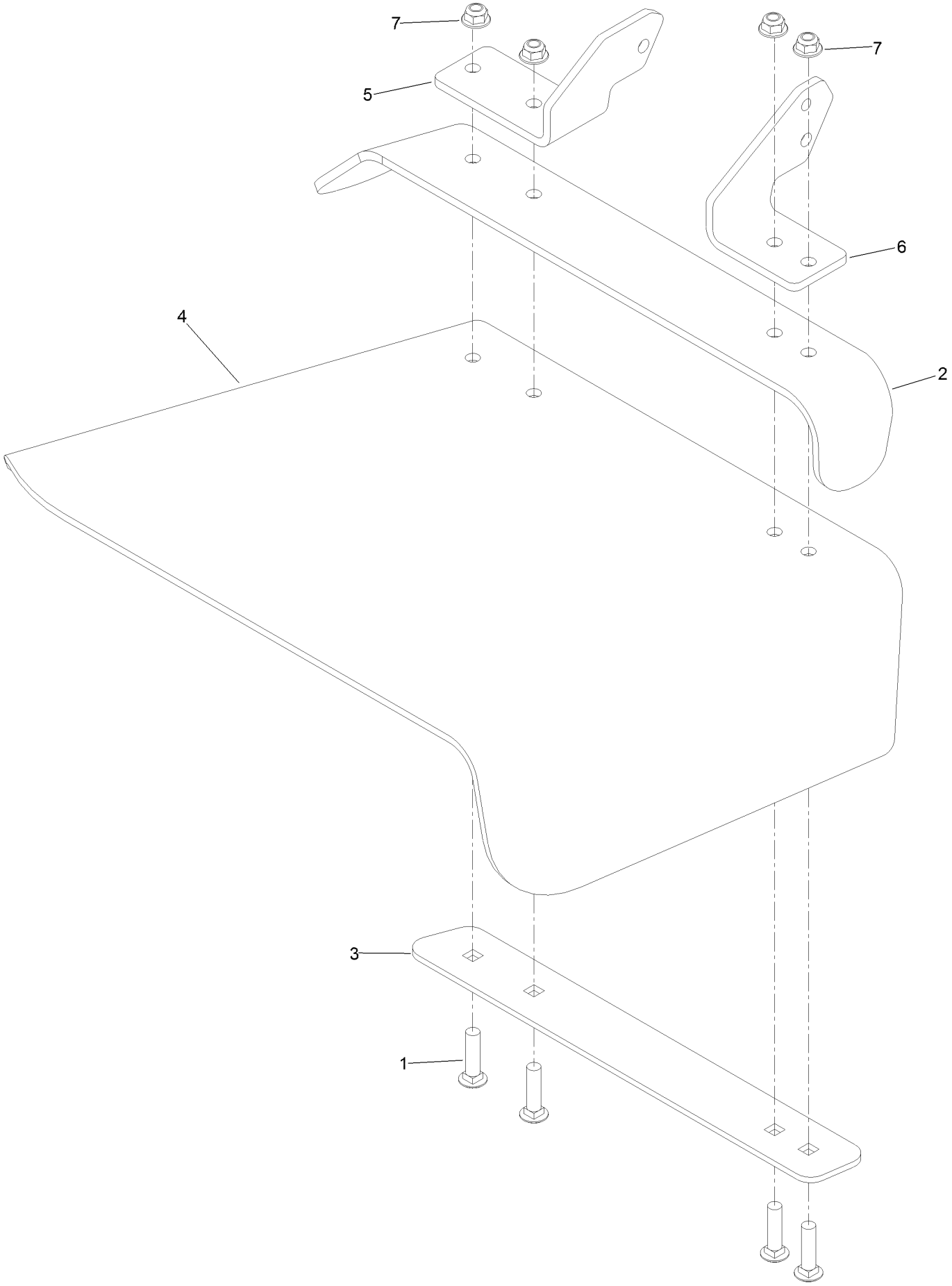

Rubber Deflector Assembly No. 108-2792 (continued)

Ref.	Part Number	Qty.	Description
1	3231-4	4	Screw-CARR
2	106-3246-01	1	Deflector
3	106-3248-03	1	Strap-Discharge
4	108-5029	1	Deflector-Rubber
5	108-4059-01	1	Plate-Hinge, Rear
6	106-3253-01	1	Plate-Hinge, Front
7	104-8301	4	Nut-Flange, NI

Attachments and Accessories

For 74925TE Z Master Professional 6000 Series Riding Mower with 152cm TURBO FORCE Side Discharge Mower

Product Name	Model/Part
Blower and Drive Kit	78553
E-Z Vac Triple Bagging System	78563
E-Z Vac DFS Collection System	78567
Deluxe Suspension Seat Kit	117-6174
Deluxe Seat Kit	121-7595
Recycler Kit	115-7468
Operator Controlled Discharge Chute Kit	117-3600
Bimini Folding Shade Assembly	115-4510
Z Stand Kit	121-4811
Light Kit	116-1154
Hitch Kit	109-9487
Trash Holder Kit	TC26
Hypr-Oil 500 (quart)	114-4713
Hypr-Oil 500 (gallon)	114-4714
Hypr-Oil 500-5 (5 gallon)	114-4715
Spark Arrestor Screen	75-6880
Blade-Hi Flow, 20.5in	105-7718-03
Blade-Mid Flow, 20.5in	105-7715-03
Blade-Lo Flow, 20.5in	105-7716-03
Blade-Atomic, 20.5in	105-8777-03
Blade-Recycler, 20.5in	105-7777-03
6 Pack Blade, 20.5in Hi-Flow	108-1114
6 Pack Blade, 20.5in Mid-Flow	108-1123
6 Pack-Blade, 20.5in Lo Flow	108-1128
6 Pack-Blade, 20.5in Atomic	108-1115
6 Pack-Blade, 20.5in Recycler	110-0405
Roller Striper Kit	115-7470
CE Bagger Compliance Kit	127-0338
Filter Minder Gauge	99-4664
Toro Deluxe Rider Cover	490-7319
Anti-Scalp Kit (Trim Side)	108-4140
Turbo Baffle Kit	107-1634
Seat Tilt Frame And Iso Mount Kit	121-7596

Notes:

Notes:

Notes:

TORO®

Count on it.