Form No. 3390-307 Rev A

TORO®

Count on it.

Parts Catalog

# TimeCutter® ZS 3200S

## Riding Mower

**Model No. 74650—Serial No. 315000001 and Up**

Register at www.Toro.com.
Original Instructions (EN)

CE

*3390-307* A

# Ordering Replacement Parts

To order replacement parts, please supply the part number, the quantity, and the description of each part desired.

**Understanding Reference Numbers**

Each identified part in an illustration has a reference number. The reference number for a part also appears in the parts list, along with other information about the part.

This catalog uses two special reference number formats, one to indicate parts in a service assembly and another to indicate the quantity of a given part in an illustration.

**Service Assembly Reference Numbers**

Parts in service assemblies have reference numbers in the form a:b. The a represents the reference number of the entire service assembly and the b represents a sequential number unique to each part within the service assembly.

For example, a wheel assembly might be identified by reference number 6, the tire by 6:1, the valve by 6:2, and the wheel by 6:3. When you order the assembly identified by reference number 6, you receive all parts identified by reference numbers 6:1,6:2, and 6:3. However, you may also order any part individually. Reference numbers of this type appear in illustration and in parts lists.

**Reference Numbers Indicating Quantity**

In an illustration, if a reference number indicates more than one part, the reference number has the form nX y. The n represents the quantity of the part, the X is the multiplication symbol, and the y represents the reference number.

For example, in an illustration, the reference number 2X 37 means that two of the parts identified by reference number 37 are indicated.

# List of Abbreviations

**AR:** as required

**ASM:** assembly

**BBC:** blade brake control

**BHTF:** button head thread forming

**CARR:** carriage

**CCW:** counter clockwise

**CW:** clockwise

**DEG:** degrees

**DPA:** Dual Point Adjustment

**ECM:** electronic control module

**EXT:** external

**FH:** flat head

**GA:** gauge

**HD:** heavy-duty

**HF:** hex flange

**HH:** hex head

**HHF:** hex head flange

**HHFTF:** hex head flange thread forming

**HJ:** hex jam

**HLH:** hex lag head

**HOC:** height-of-cut

**HP:** high pressure

**HSBH:** hex socket button head

**HSFH:** hex socket flat head

**HSH:** hex socket head

**HWH:** hex washer head

**HWHTF:** hex washer head thread forming

**HYD:** hydraulic

**LH:** left hand

**LP:** low pressure

**LPG:** Liquefied Petroleum Gas

**NI:** nylon insert

**NPTF:** national pipe thread fine

**PFH:** phillips flat head

**PPH:** phillips pan head

**PPHTF:** phillips pan head thread forming

**PRH:** phillips round head

**PTH:** phillips truss head

**PTO:** power-take-off

**RH:** right hand

**ROPS:** roll-over protection system

**RRB:** rear roller brush

**SFH:** slotted fillister head

**SHH:** slotted hex head

**SHWH:** slotted hex washer head

**SPH:** slotted pan head

**SQH:** square head

**SRH:** slotted round head

**STD:** standard

**TAP:** self tapping

**TTH:** torx truss head

# Contents

Frame, Front Axle and Caster Wheel Assembly . . . . . 4
Caster Wheel Assembly No. 130-0736. . . . . 6
Deck Lift Assembly. . . . . 8
Motion Control Assembly . . . . . 10
Brake Assembly . . . . . 12
Seat Assembly . . . . . 14
Belt and Idler Assembly. . . . . 16
Hydro Transaxle and Rear Wheel Assembly . . . . . 18
Right Hand Hydro Transaxle Assembly No. 119-3331 . . . . . 20
Left Hand Hydro Transaxle Assembly No. 119-3330 . . . . . 22
4 Ply Wheel and Tire Assembly No. 119-3422. . . . . 24
2 Ply Wheel and Tire Assembly No. 131-3670 . . . . . 26
Clutch Assembly. . . . . 28
Engine and Muffler Assembly. . . . . 30
Fuel System Assembly Engine Assembly No. 127-9358 . . . . . 32
Air Intake and Filtration Assembly Engine Assembly No. 127-9358. . . . . 34
Ignition and Electrical Assembly Engine Assembly No. 127-9358 . . . . . 36
Crankcase Assembly Engine Assembly No. 127-9358 . . . . . 38
Governor Control Assembly Engine Assembly No. 127-9358. . . . . 40
Piston and Cylinder Head Assembly Engine Assembly No. 127-9358. . . . . 42
Blower Housing Assembly Engine Assembly No. 127-9358 . . . . . 44
Gasket and Seal Kit Engine Assembly No. 127-9358. . . . . 46
Body Styling and Fuel Tank Assembly . . . . . 48
Fuel Delivery Assembly. . . . . 50
Battery and Electrical Assembly. . . . . 52
Fuse and Wire Harness Assembly. . . . . 54
32 Inch Deck Assembly. . . . . 56
32 Inch Deck Assembly No. 131-3602 . . . . . 58
32 Inch Deck, Belt and Blade Assembly . . . . . 60
Attachments and Accessories . . . . . 62

**© 2015—The Toro® Company**
**8111 Lyndale Avenue South**
**Bloomington, MN 55420**



**Contact us at www.Toro.com.**
**Printed in the USA.**
**All Rights Reserved**

# Frame, Front Axle and Caster Wheel Assembly

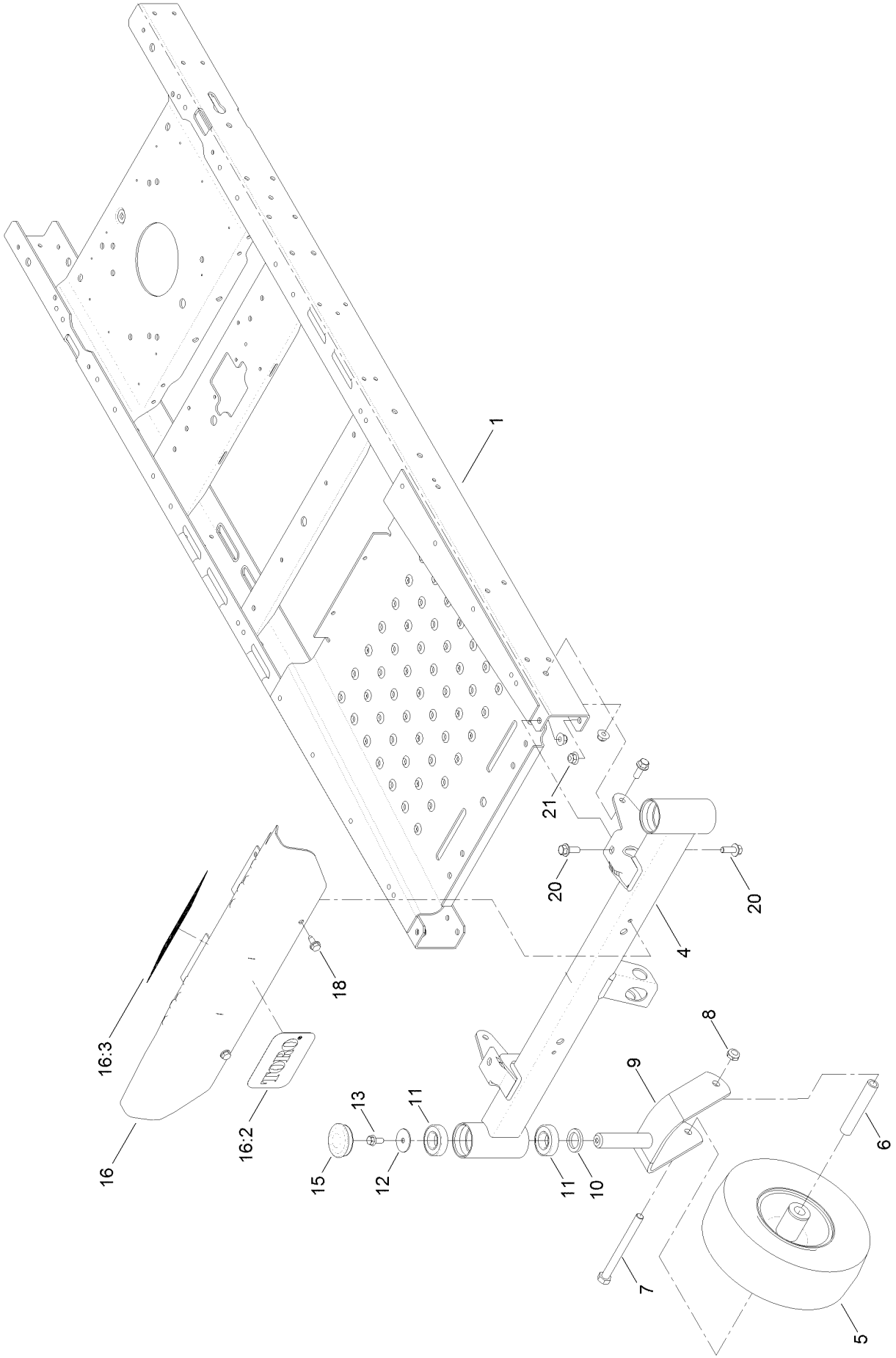

# Frame, Front Axle and Caster Wheel Assembly (continued)

| Ref. | Part Number | Qty. | Description |
|---|---|---|---|
| 1 | 127-3444-01 | 1 | Frame ASM |
| 4 | 125-1742-01 | 1 | Axle-Front, Narrow |
| 5 | 130-0736 | 2 | Caster Wheel ASM |
| 6 | 104-3667 | 2 | Spanner-Wheel |
| 7 | 325-22 | 2 | Screw-HH |
| 8 | 3296-45 | 2 | Nut-Lock, NI |
| 9 | 120-7964-01 | 2 | Caster Fork ASM |
| 10 | 117-7394 | 2 | Washer-Thrust |
| 11 | 109-3678 | 4 | Bearing-Ball |
| 12 | 3256-68 | 2 | Washer-Flat |
| 13 | 3234-47 | 2 | Screw-HHF |
| 15 | 116-4348 | 2 | Cap-Grease |
| 16 | 132-0890 | 1 | Footrest ASM |
| 16:2 | 105-8278 | 1 | Decal |
| 16:3 | 132-0869 | 1 | Decal-Danger |
| 18 | 32144-70 | 2 | Screw-HWHTF |
| 20 | 3234-42 | 6 | Screw-HHF |
| 21 | 104-8301 | 6 | Nut-Flange, NI |

# Caster Wheel Assembly No. 130-0736

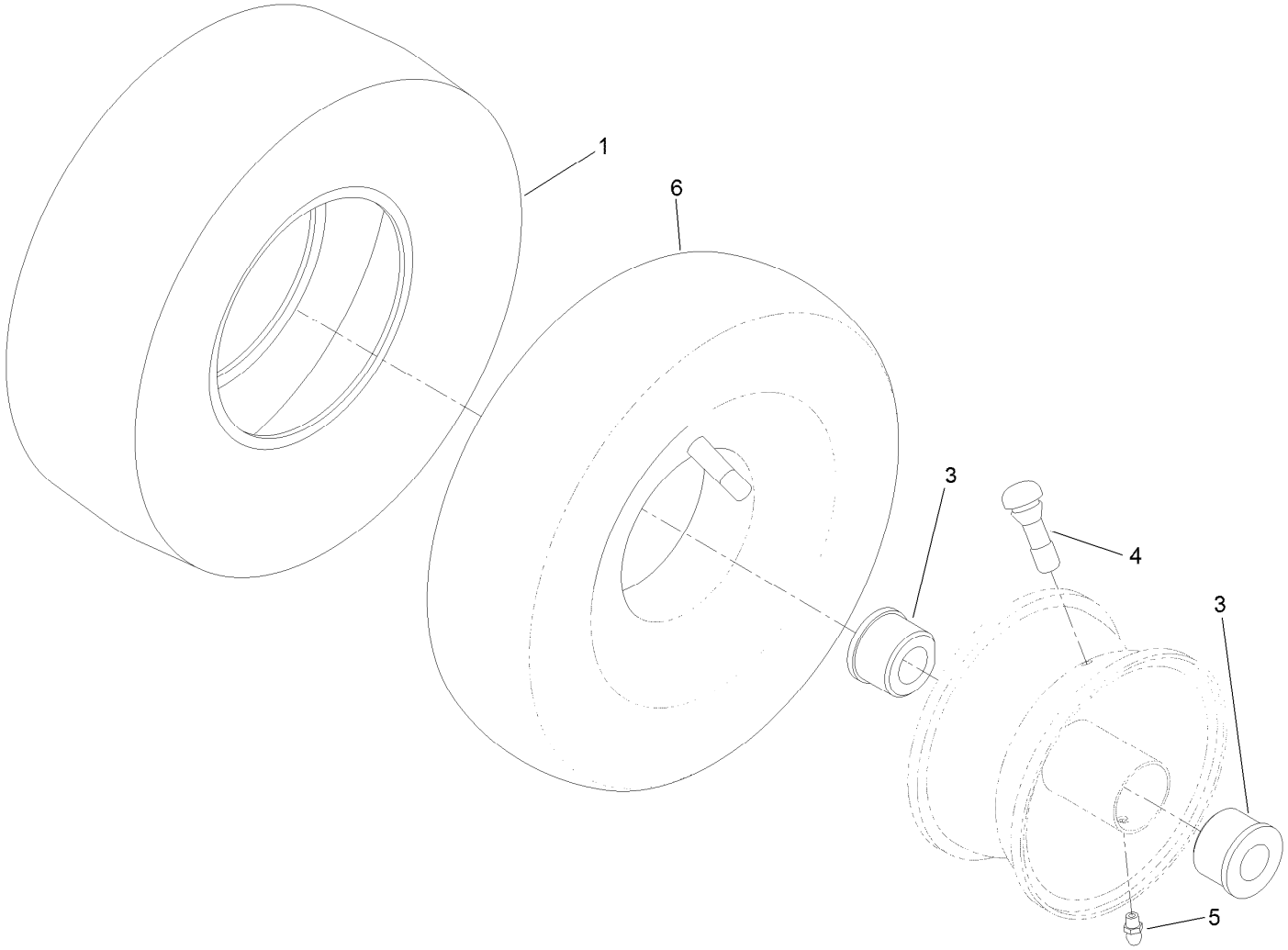

# Caster Wheel Assembly No. 130-0736 (continued)

| Ref. | Part Number | Qty. | Description |
|---|---|---|---|
| 1 | 130-0735 | 1 | Tire |
| 3 | 114-1640 | 2 | Bushing-Flange |
| 4 | 232-27 | 1 | Stem-Valve |
| 5 | 302-5 | 1 | Fitting-Grease |
| 6 | 105-0844 | 1 | Tube-Inner ● |

● Optional Equipment

# Deck Lift Assembly

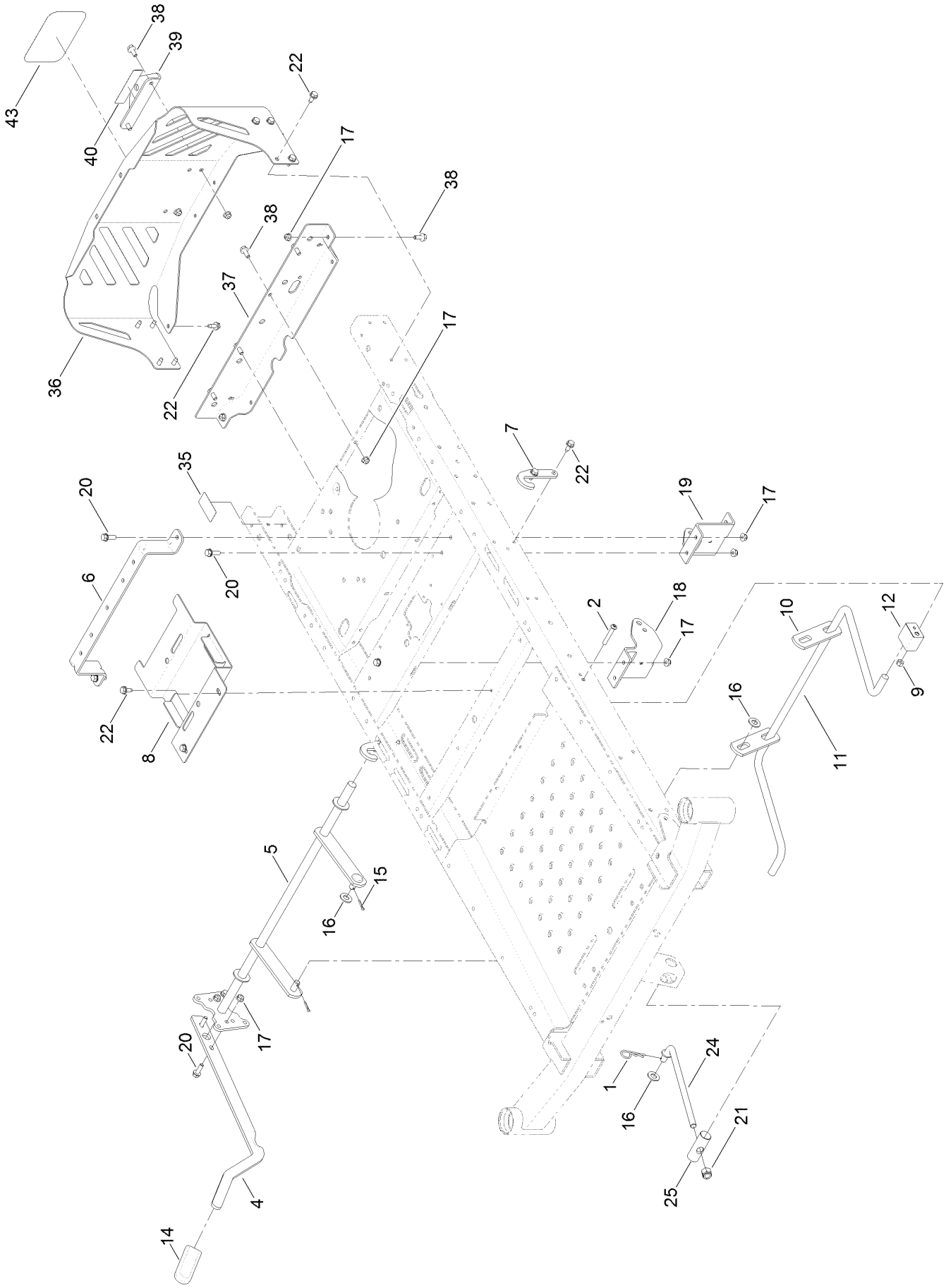

# Deck Lift Assembly (continued)

| Ref. | Part Number | Qty. | Description |
|---|---|---|---|
| 1 | 1-806005 | 1 | Pin-Cotter |
| 2 | 120-5499 | 2 | Screw-HSBH |
| 4 | 119-3427-03 | 1 | Lever-Lift |
| 5 | 117-7346-03 | 1 | Lift-Deck, Narrow |
| 6 | 119-3435-03 | 1 | Brace-Seat, Rear (Narrow) |
| 7 | 119-8875 | 2 | Bracket-Lift |
| 8 | 131-0914-03 | 1 | Bracket-Battery |
| 9 | 3296-29 | 2 | Nut-Lock, NI |
| 10 | 108-7840 | 2 | Link-Lift |
| 11 | 108-7839 | 1 | Arm-Lift, Rear |
| 12 | 108-7845 | 2 | Block-Pivot |
| 14 | 1-633268 | 1 | Grip-Lever |
| 15 | 3272-11 | 2 | Pin-Cotter |
| 16 | 3256-26 | 3 | Washer-Flat |
| 17 | 104-8300 | 14 | Nut-Flange, NI |
| 18 | 131-0901-01 | 1 | Mount-Hydro, Front Right |
| 19 | 131-0902-01 | 1 | Mount-Hydro, Front Left |
| 20 | 3234-29 | 6 | Screw-HHF |
| 21 | 3296-19 | 1 | Nut-Hex |
| 22 | 32144-70 | 16 | Screw-HWHTF |
| 24 | 131-3945 | 1 | Rod-Mount, Deck |
| 25 | 119-8810 | 1 | Pin-Pivot |
| 35 | 121-2989 | 2 | Decal-Bypass |
| 36 | 127-3353-03 | 1 | Guard-Engine, Narrow |
| 37 | 130-6950-01 | 1 | Crossmember-Rear, Narrow |
| 38 | 3234-47 | 8 | Screw-HHF |
| 39 | 117-1232-03 | 1 | Bracket-Hitch |
| 40 | 131-4036 | 1 | Decal |
| 43 | 99-4693 | 1 | Decal |

# Motion Control Assembly

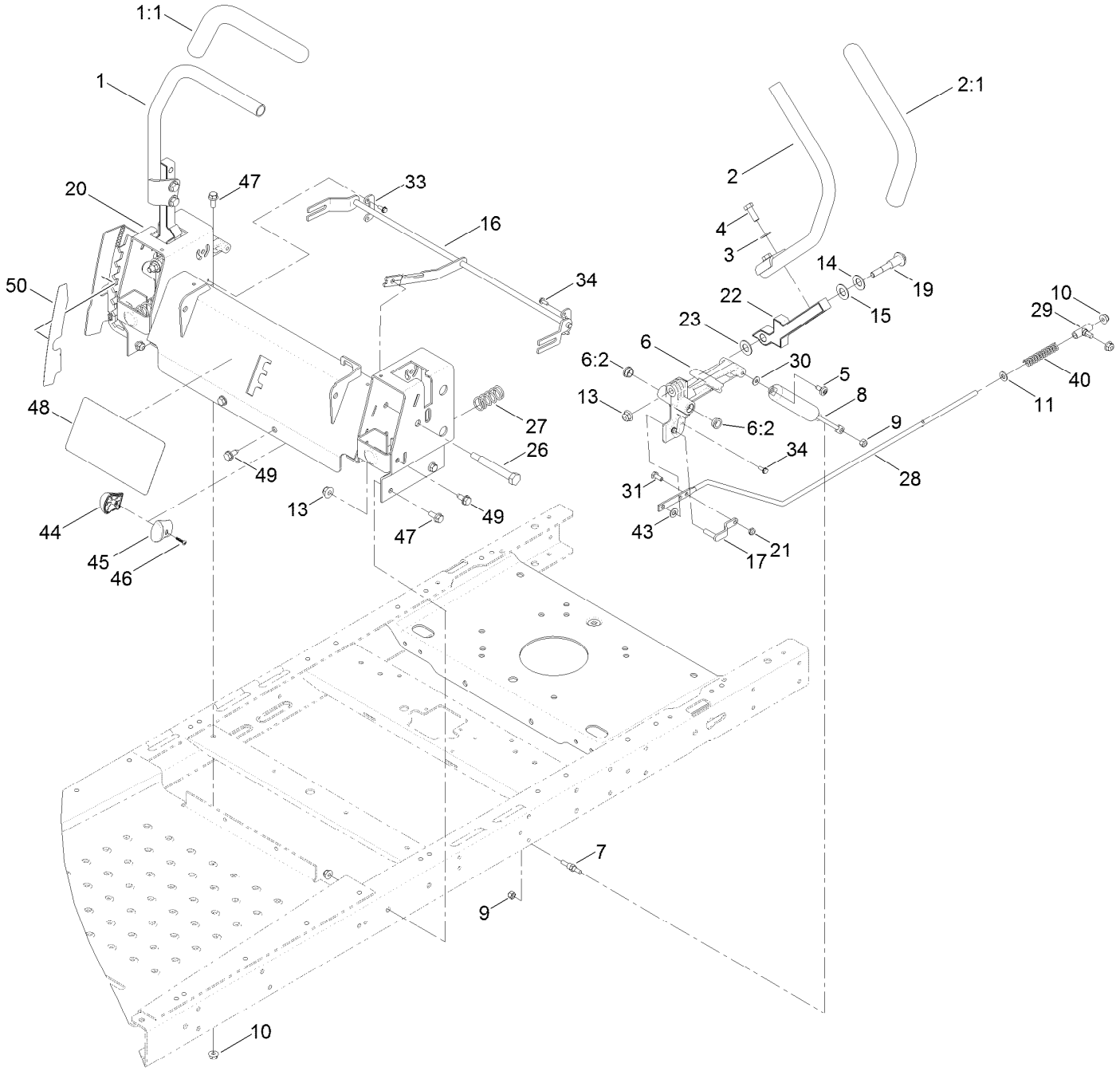

# Motion Control Assembly (continued)

| Ref. | Part Number | Qty. | Description |
|---|---|---|---|
| 1 | 121-0731 | 1 | Handle-Control, RH |
| 1:1 | 121-0726 | 1 | Grip |
| 2 | 121-0730 | 1 | Handle-Control, LH |
| 2:1 | 121-0726 | 1 | Grip |
| 3 | 3256-24 | 4 | Washer-Flat |
| 4 | 323-6 | 4 | Screw-HH |
| 5 | 120-7950 | 2 | Screw-Shoulder |
| 6 | 119-3470 | 2 | Actuator Arm ASM |
| 6:2 | 256-156 | 2 | Bushing-Flange |
| 7 | 110-6810 | 2 | Stud-Damper |
| 8 | 131-4132 | 2 | Damper |
| 9 | 3296-42 | 4 | Nut-Lock, NI |
| 10 | 104-8300 | 10 | Nut-Flange, NI |
| 11 | 3256-23 | 2 | Washer-Flat |
| 13 | 104-8301 | 4 | Nut-Flange, NI |
| 14 | 119-8925 | 2 | Washer-Belleville |
| 15 | 117-1240 | 2 | Washer |
| 16 | 131-1094 | 1 | Speed Control ASM |
| 17 | 119-3303 | 2 | Pin-Rod, Hydro |
| 19 | 117-1198 | 2 | Bolt-Pivot |
| 20 | 131-1093-03 | 1 | Control Box ASM |

| Ref. | Part Number | Qty. | Description |
|---|---|---|---|
| 21 | 3296-56 | 2 | Nut-Lock, NI |
| 22 | 115-5098-05 | 2 | Lever-Control |
| 23 | 120-2273 | 2 | Washer-Nylon |
| 26 | 115-5099 | 2 | Bolt-Pivot |
| 27 | 119-8876 | 2 | Spring-Return |
| 28 | 117-5388 | 2 | Rod-Hydro |
| 29 | 119-8842 | 2 | Mount-Rod, Hydro |
| 30 | 119-8952 | 2 | Washer |
| 31 | 321-3 | 2 | Screw-HH |
| 33 | 117-5385 | 2 | Retainer |
| 34 | 32144-1 | 4 | Screw-Taptite |
| 40 | 1-603807 | 2 | Spring-Return, Neutral |
| 43 | 93-6079 | 2 | Spacer-Nylon |
| 44 | 119-8935 | 1 | Knob-RH |
| 45 | 119-8936 | 1 | Knob-LH |
| 46 | 94-4496 | 1 | Screw-PPH |
| 47 | 3234-47 | 6 | Screw-HHF |
| 48 | 131-3948 | 1 | Decal-Speed Control |
| 49 | 32144-70 | 4 | Screw-HWHTF |
| 50 | 120-5469 | 1 | Decal |

# Brake Assembly

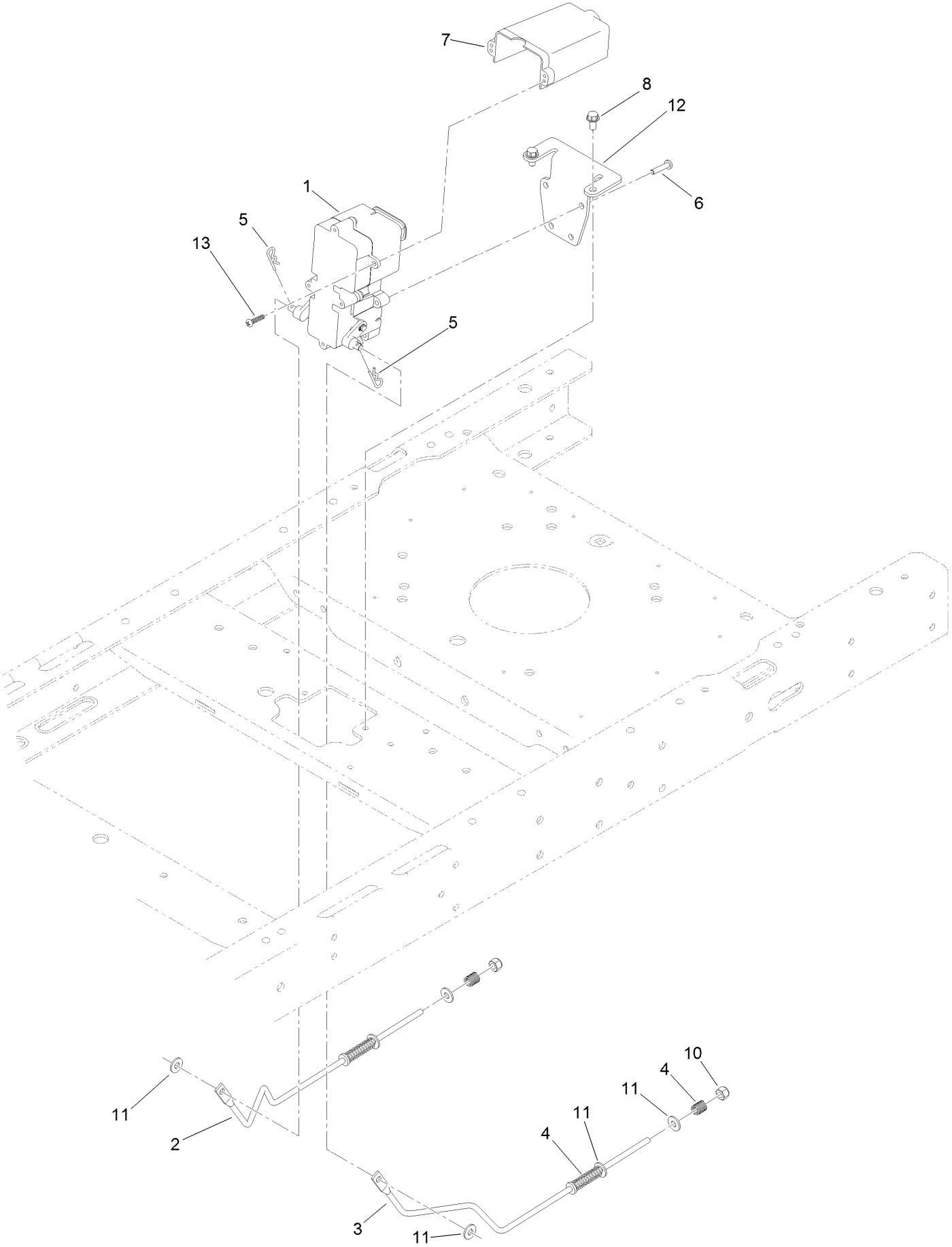

# Brake Assembly (continued)

| Ref. | Part Number | Qty. | Description |
|---|---|---|---|
| 1 | 130-6892 | 1 | Brake Box ASM |
| 2 | 121-2974 | 1 | Rod-Brake, RH |
| 3 | 121-2975 | 1 | Rod-Brake, LH |
| 4 | 117-1169 | 4 | Spring-Compression |
| 5 | 3290-307 | 2 | Pin-Cotter |
| 6 | 32144-36 | 4 | Screw-PPH |
| 7 | 130-6974 | 1 | Cover-Connector |
| 8 | 32144-4 | 2 | Screw-HWH |
| 10 | 3296-42 | 2 | Nut-Lock, NI |
| 11 | 119-8952 | 6 | Washer |
| 12 | 130-0790-03 | 1 | Bracket-Mount, Brake |
| 13 | 94-4496 | 2 | Screw-PPH |

# Seat Assembly

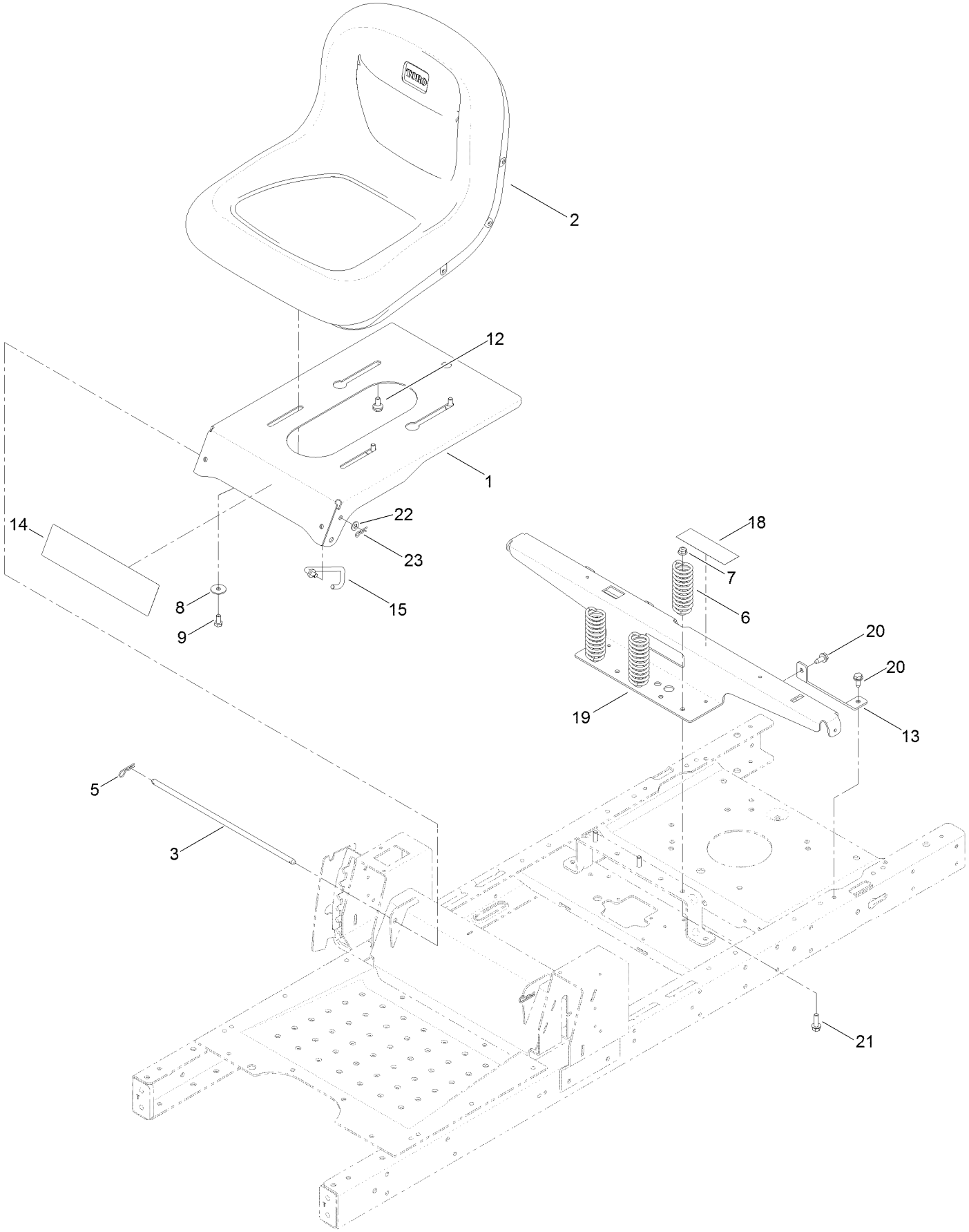

# Seat Assembly (continued)

| Ref. | Part Number | Qty. | Description |
|---|---|---|---|
| 1 | 119-3391-01 | 1 | Pan-Seat |
| 2 | 119-8828 | 1 | Seat-15 Inch |
| 3 | 119-3433 | 1 | Rod-Pivot, Narrow |
| 5 | 3290-250 | 2 | Pin-Cotter |
| 6 | 92-7054 | 3 | Spring-Compression |
| 7 | 104-8300 | 3 | Nut-Flange, NI |
| 8 | 5-4460 | 2 | Washer-Pivot |
| 9 | 322-2 | 2 | Screw-HH |
| 12 | 37-8771 | 2 | Bolt-Shoulder |
| 13 | 119-3431-03 | 2 | Support-Tank, Rear |
| 14 | 121-3032 | 1 | Decal-Timecutter |
| 15 | 119-8972 | 1 | Stop-Seat |
| 18 | 106-8717 | 1 | Decal-Service |
| 19 | 131-1040-03 | 1 | Support-Pod |
| 20 | 32144-70 | 4 | Screw-HWHTF |
| 21 | 3234-29 | 3 | Screw-HHF |
| 22 | 3256-23 | 1 | Washer-Flat |
| 23 | 3290-307 | 1 | Pin-Cotter |

# Belt and Idler Assembly

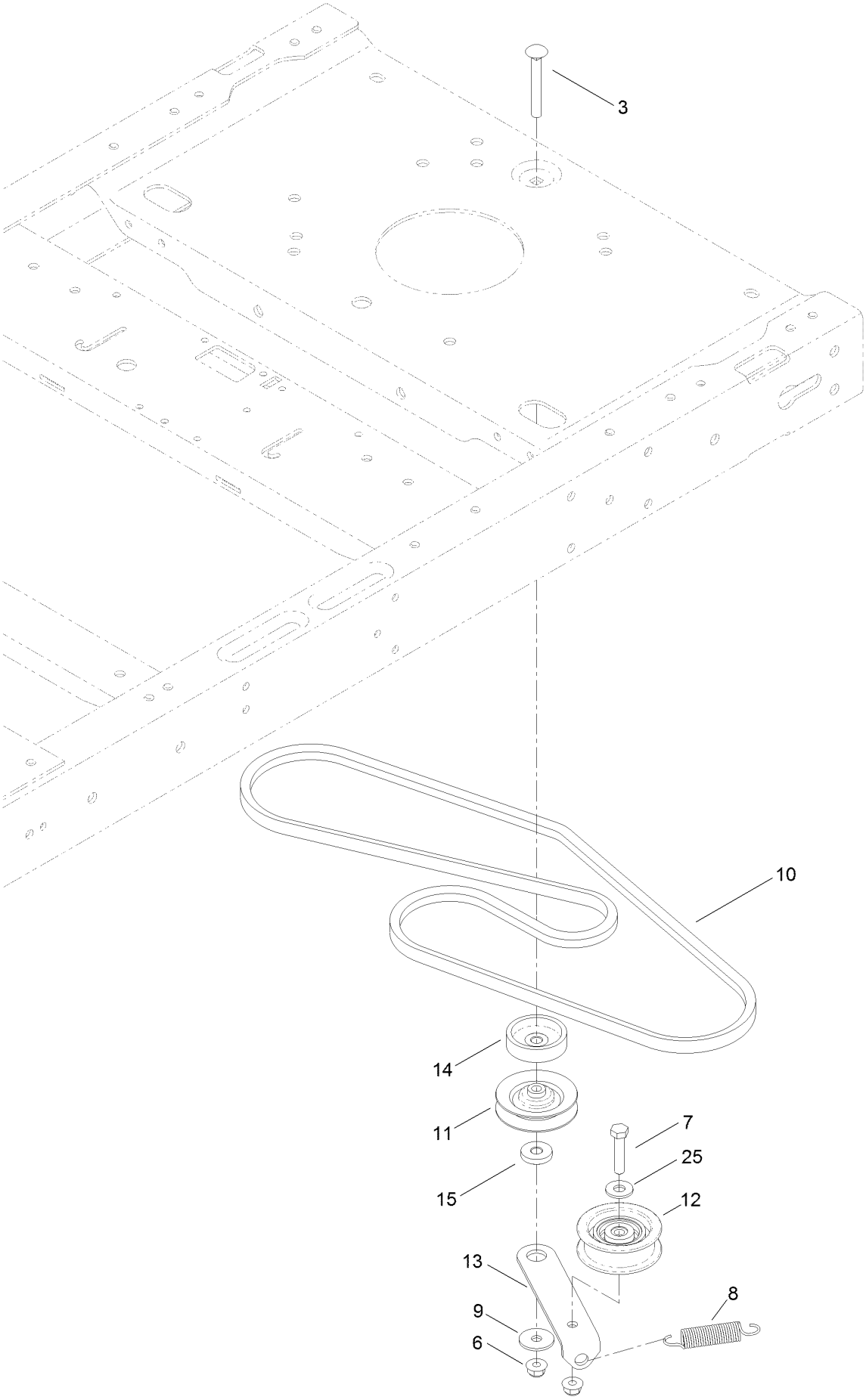

# Belt and Idler Assembly (continued)

| Ref. | Part Number | Qty. | Description |
|---|---|---|---|
| 3 | 3230-8 | 1 | Screw-CARR |
| 6 | 104-8300 | 2 | Nut-Flange, NI |
| 7 | 322-7 | 1 | Screw-HH |
| 8 | 104-6415 | 1 | Spring-Return, Pedal |
| 9 | 5-4460 | 1 | Washer-Pivot |
| 10 | 119-3309 | 1 | V-Belt |
| 11 | 119-8822 | 1 | Pulley-Idler |
| 12 | 106-2176 | 1 | Pulley-Idler |
| 13 | 119-3326 | 1 | Arm-Idler |
| 14 | 119-3353 | 1 | Spacer |
| 15 | 119-3327 | 1 | Spacer-Arm, Idler |
| 25 | 3256-3 | 1 | Washer-Flat |

# Hydro Transaxle and Rear Wheel Assembly

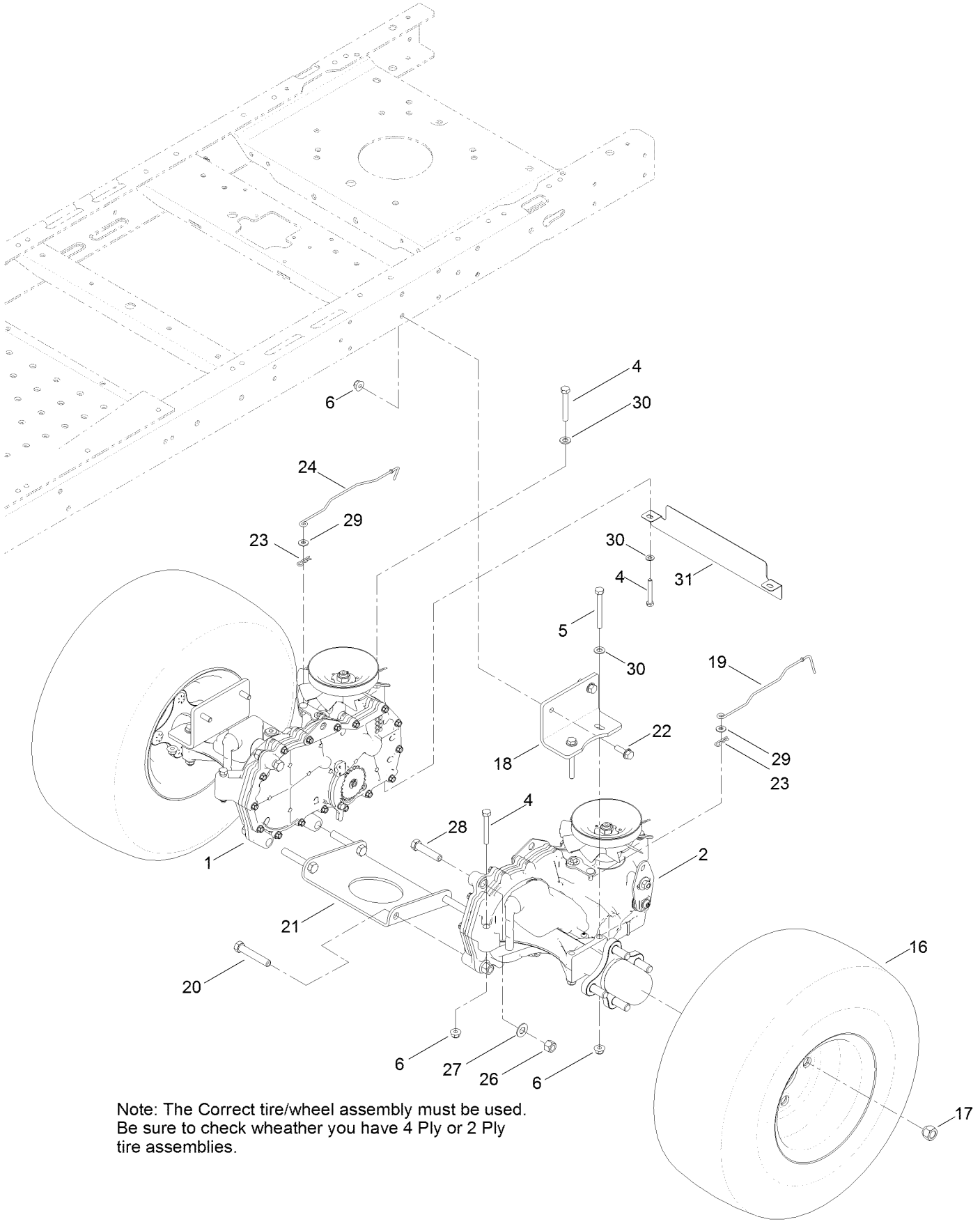


Note: The Correct tire/wheel assembly must be used.
Be sure to check wheather you have 4 Ply or 2 Ply
tire assemblies.

# Hydro Transaxle and Rear Wheel Assembly (continued)

| Ref. | Part Number | Qty. | Description |
|---|---|---|---|
| 1 | 119-3331 | 1 | RH Hydro Transaxle ASM |
| 2 | 119-3330 | 1 | LH Hydro Transaxle ASM |
| 4 | 322-11 | 4 | Screw-HH |
| 5 | 322-13 | 4 | Screw-HH |
| 6 | 104-8300 | 12 | Nut-Flange, NI |
| 16 | 119-3422 | 2 | 4 Ply Wheel And Tire ASM |
| 16 | 131-3670 | 2 | 2 Ply Tire And Wheel ASM |
| 17 | 242-50 | 8 | Nut-Lug |
| 18 | 117-7264-03 | 2 | Mount-Hydro |
| 19 | 131-0900 | 1 | Rod-Bypass, LH |
| 20 | 324-10 | 4 | Screw-HH |

| Ref. | Part Number | Qty. | Description |
|---|---|---|---|
| 21 | 119-3339-03 | 1 | Plate-Cross, Hydro |
| 22 | 3234-29 | 4 | Screw-HHF |
| 23 | 3290-307 | 2 | Pin-Cotter |
| 24 | 130-7049 | 1 | Rod-Bypass, RH |
| 26 | 3296-48 | 6 | Nut-Lock, NI |
| 27 | 3256-25 | 6 | Washer-Flat |
| 28 | 324-8 | 2 | Screw-HH |
| 29 | 119-8952 | 2 | Washer |
| 30 | 3256-23 | 6 | Washer-Flat |
| 31 | 131-3668-03 | 1 | Guard Rear, Narrow |

# Right Hand Hydro Transaxle Assembly No. 119-3331

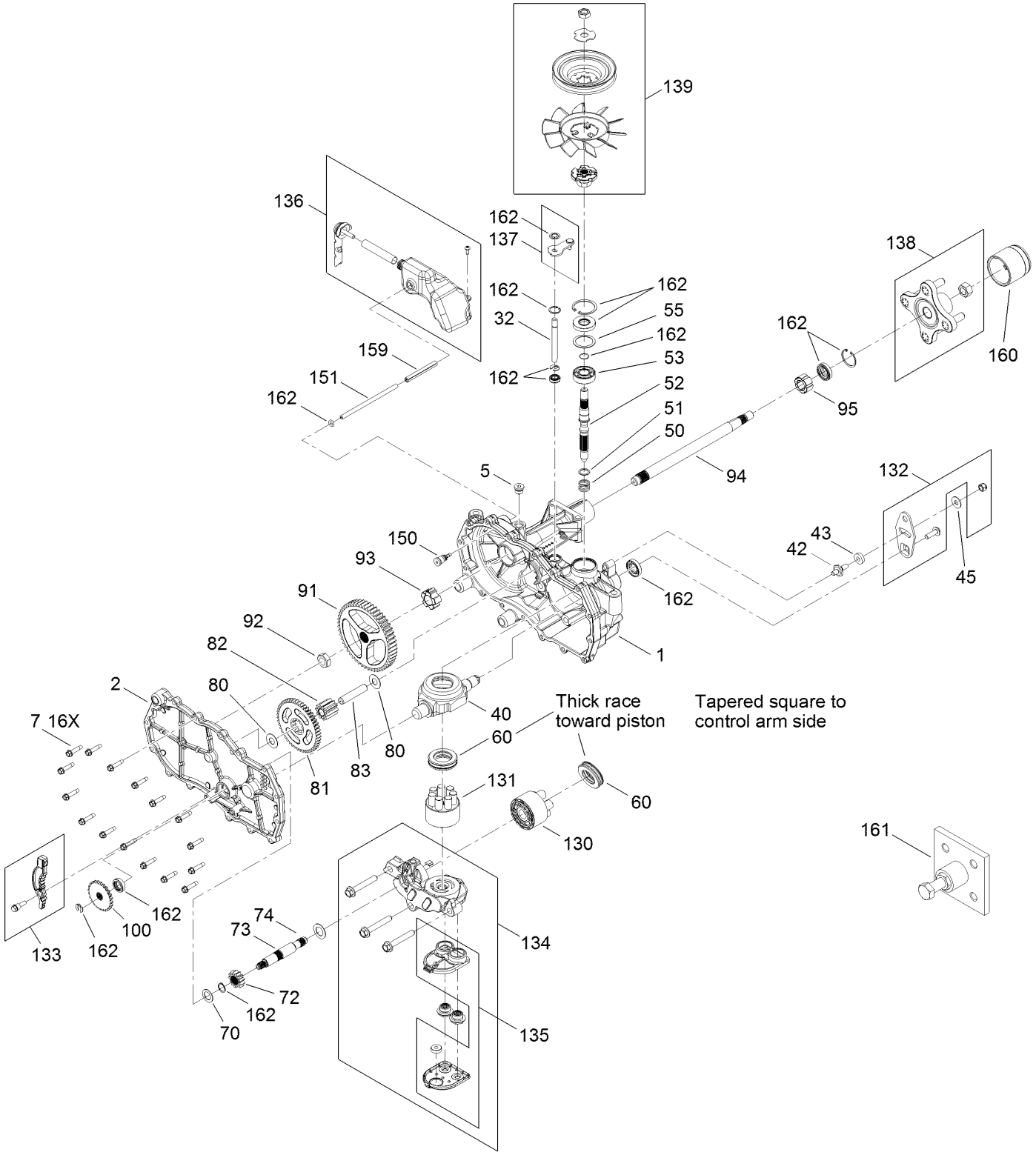

# Right Hand Hydro Transaxle Assembly No. 119-3331 (continued)

| Ref. | Part Number | Qty. | Description |
|---|---|---|---|
| 1 | 120-5531 | 1 | Main Housing ASM |
| 2 | 120-5533 | 1 | Housing Side Kit |
| 5 | 104-2189 | 1 | Plug-Thread, Straight |
| 7 | 117-5359 | 16 | Screw-HHF |
| 13 | 104-2147 | 1 | Sealant ● |
| 32 | 106-8678 | 2 | Rod-Bypass |
| 40 | 104-5304 | 1 | Swashplate-Trunnion |
| 42 | 104-2116 | 1 | Stud |
| 43 | 112-9853 | 1 | Puck-Friction |
| 45 | 114-8491 | 1 | Washer |
| 50 | 120-5537 | 1 | Spring-Compression |
| 51 | 120-5538 | 1 | Washer |
| 52 | 104-5306 | 1 | Shaft-Input |
| 53 | 104-5311 | 1 | Bearing-Ball |
| 55 | 104-5308 | 1 | Spacer |
| 60 | 94-6922 | 1 | Bearing-Thrust |
| 70 | 104-5339 | 1 | Washer-Flat |
| 72 | 104-5316 | 1 | Gear-Pinnion, 13T |
| 73 | 106-8683 | 1 | Shaft-Motor |
| 74 | 104-5360 | 1 | Washer |
| 80 | 119-5541 | 2 | Washer |
| 81 | 104-5317 | 1 | Gear-10T/48T |
| 82 | 104-5318 | 1 | Gear-Jackshaft, 10T |
| 83 | 104-5329 | 1 | Pin-Jackshaft |
| 91 | 120-5539 | 1 | Gear-Bull |
| 92 | 104-2142 | 1 | Nut-HJ |
| 93 | 115-8314 | 1 | Bushing-Inboard |
| 94 | 120-5540 | 1 | Shaft-Axle |
| 95 | 120-5541 | 1 | Bearing-Sleeve |
| 100 | 106-8694 | 1 | Disc-Brake, Cog |
| 130 | 103-2666 | 1 | Cylinder Block Kit |
| 131 | 110-8561 | 1 | Pump Block ASM |
| 132 | 117-5362 | 1 | Arm Control Kit |
| 133 | 106-8688 | 1 | Brake Arm Kit |
| 134 | 112-9862 | 1 | Center Section Filter Kit |
| 135 | 114-1634 | 1 | Filter Kit |
| 136 | 121-5735 | 1 | LH Expansion Tank Kit |
| 137 | 107-2489 | 1 | Bypass Arm Kit |
| 138 | 121-5731 | 1 | Hub Kit |
| 139 | 121-5729 | 1 | Fan Pulley Kit |
| 150 | 104-5349 | 1 | Fitting-Sae |
| 151 | 115-8302 | 1 | Hose |
| 159 | 121-5728 | 1 | Case-Tube |
| 160 | 125-0041 | 1 | Cap-Axle |
| 161 | 114-8467 | 1 | Hub-Puller, 4 Bolt |
| 162 | 120-7103 | 1 | Seal And Ring Kit |

● Not illustrated

# Left Hand Hydro Transaxle Assembly No. 119-3330

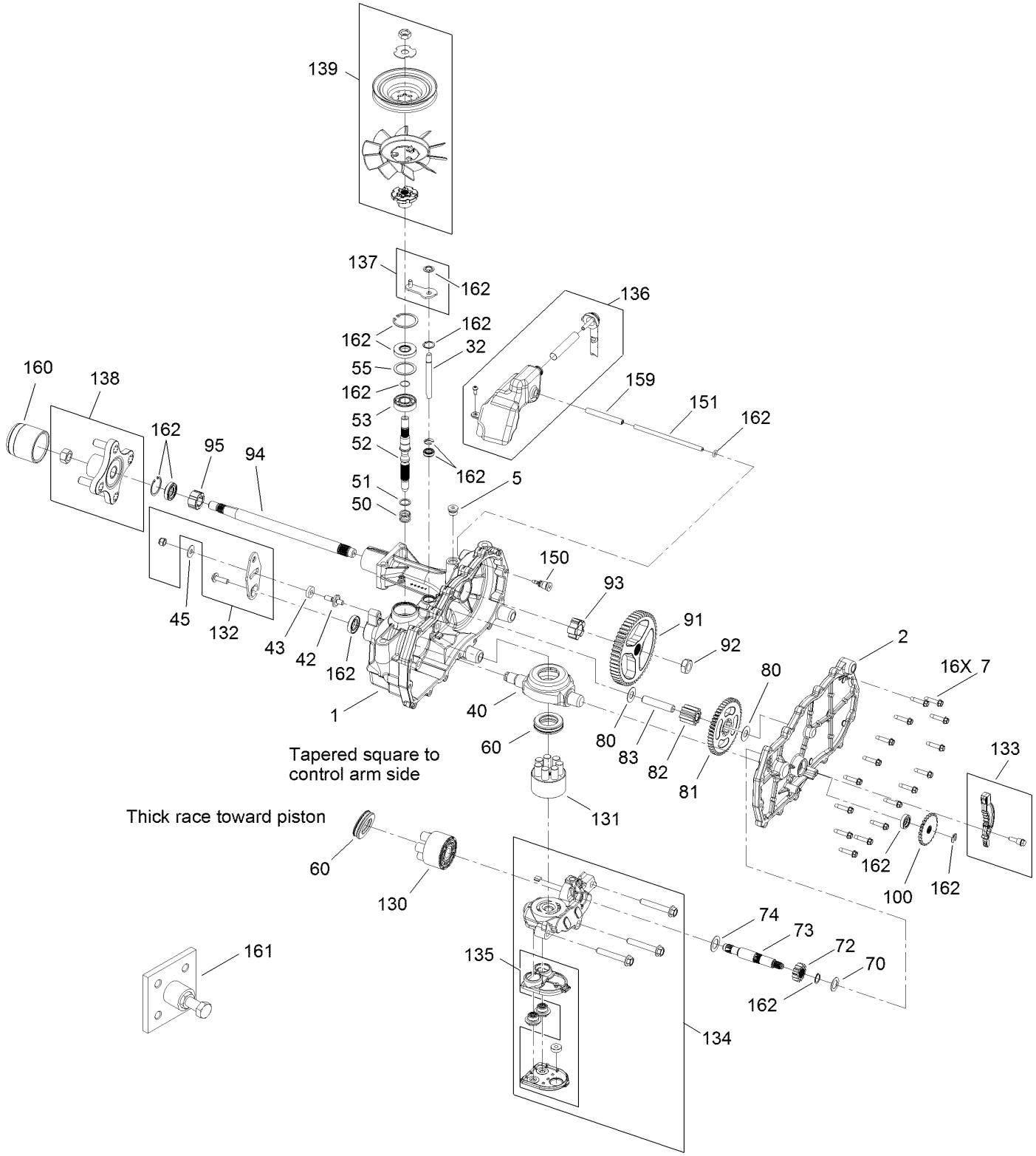

# Left Hand Hydro Transaxle Assembly No. 119-3330 (continued)

| Ref. | Part Number | Qty. | Description |
|---|---|---|---|
| 1 | 120-5532 | 1 | Main Housing ASM |
| 2 | 120-5534 | 1 | Housing Side Kit |
| 5 | 104-2189 | 1 | Plug-Thread, Straight |
| 7 | 117-5359 | 16 | Screw-HHF |
| 13 | 104-2147 | 1 | Sealant ● |
| 32 | 106-8678 | 2 | Rod-Bypass |
| 40 | 104-5304 | 1 | Swashplate-Trunnion |
| 42 | 104-2116 | 1 | Stud |
| 43 | 112-9853 | 1 | Puck-Friction |
| 45 | 114-8491 | 1 | Washer |
| 50 | 120-5537 | 1 | Spring-Compression |
| 51 | 120-5538 | 1 | Washer |
| 52 | 104-5306 | 1 | Shaft-Input |
| 53 | 104-5311 | 1 | Bearing-Ball |
| 55 | 104-5308 | 1 | Spacer |
| 60 | 94-6922 | 1 | Bearing-Thrust |
| 70 | 104-5339 | 1 | Washer-Flat |
| 72 | 104-5316 | 1 | Gear-Pinnion, 13T |
| 73 | 106-8683 | 1 | Shaft-Motor |
| 74 | 104-5360 | 1 | Washer |
| 80 | 119-5541 | 2 | Washer |
| 81 | 104-5317 | 1 | Gear-10T/48T |
| 82 | 104-5318 | 1 | Gear-Jackshaft, 10T |
| 83 | 104-5329 | 1 | Pin-Jackshaft |
| 91 | 120-5539 | 1 | Gear-Bull |
| 92 | 104-2142 | 1 | Nut-HJ |
| 93 | 115-8314 | 1 | Bushing-Inboard |
| 94 | 120-5540 | 1 | Shaft-Axle |
| 95 | 120-5541 | 1 | Bearing-Sleeve |
| 100 | 106-8694 | 1 | Disc-Brake, Cog |
| 130 | 103-2666 | 1 | Cylinder Block Kit |
| 131 | 110-8561 | 1 | Pump Block ASM |
| 132 | 117-5362 | 1 | Arm Control Kit |
| 133 | 106-8688 | 1 | Brake Arm Kit |
| 134 | 112-9861 | 1 | Center Section Filter Kit |
| 135 | 114-1634 | 1 | Filter Kit |
| 136 | 121-5730 | 1 | RH Expansion Tank Kit |
| 137 | 120-5549 | 1 | Bypass Kit |
| 138 | 121-5731 | 1 | Hub Kit |
| 139 | 121-5729 | 1 | Fan Pulley Kit |
| 150 | 104-5349 | 1 | Fitting-Sae |
| 151 | 115-8302 | 1 | Hose |
| 159 | 121-5728 | 1 | Case-Tube |
| 160 | 125-0041 | 1 | Cap-Axle |
| 161 | 114-8467 | 1 | Hub-Puller, 4 Bolt |
| 162 | 120-7103 | 1 | Seal And Ring Kit |

● Not illustrated

# 4 Ply Wheel and Tire Assembly No. 119-3422

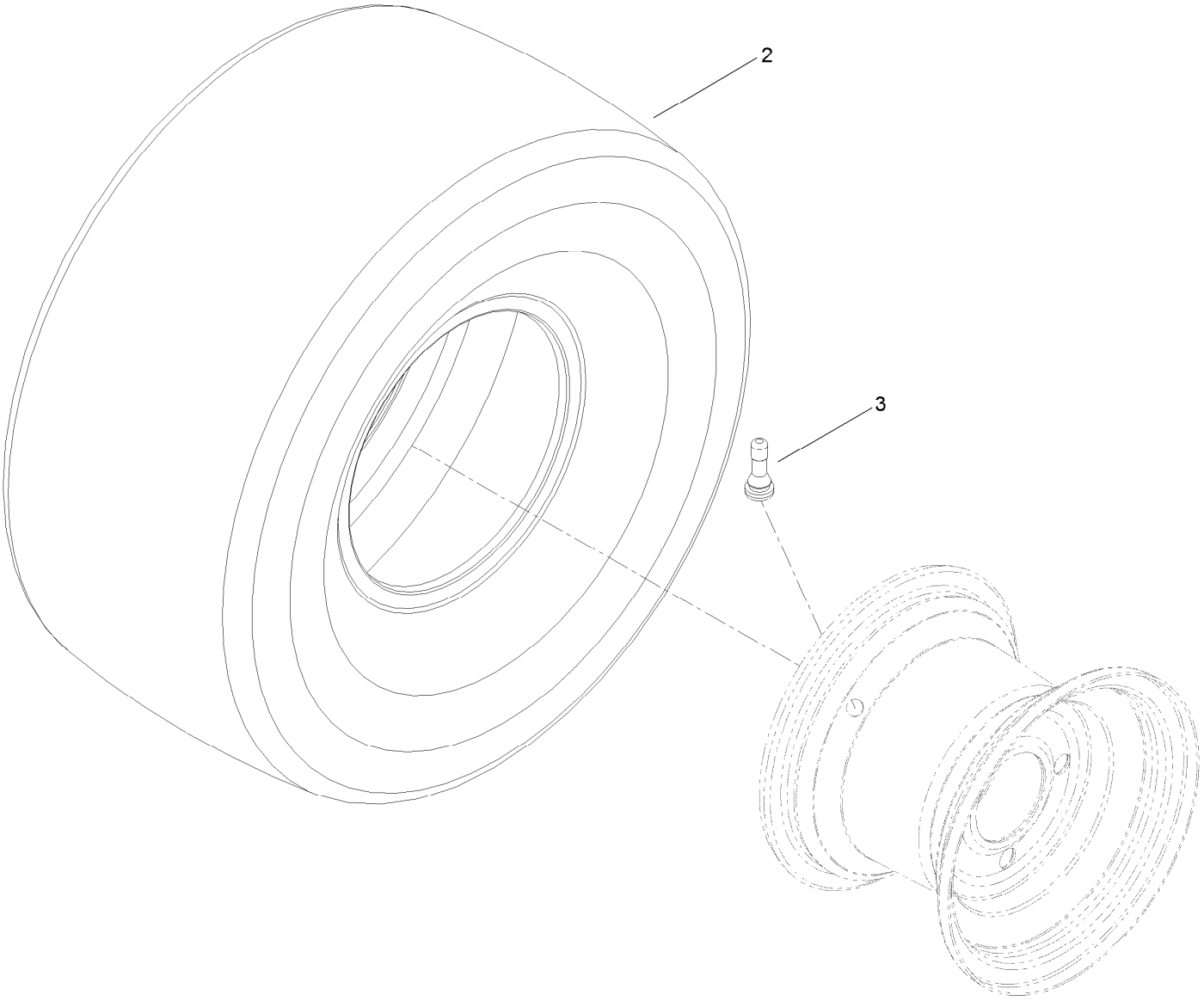

# 4 Ply Wheel and Tire Assembly No. 119-3422 (continued)

| Ref. | Part Number | Qty. | Description |
|---|---|---|---|
| 2 | 119-3421 | 1 | Tire-4 Ply |
| 3 | 232-27 | 1 | Stem-Valve |

# 2 Ply Wheel and Tire Assembly No. 131-3670

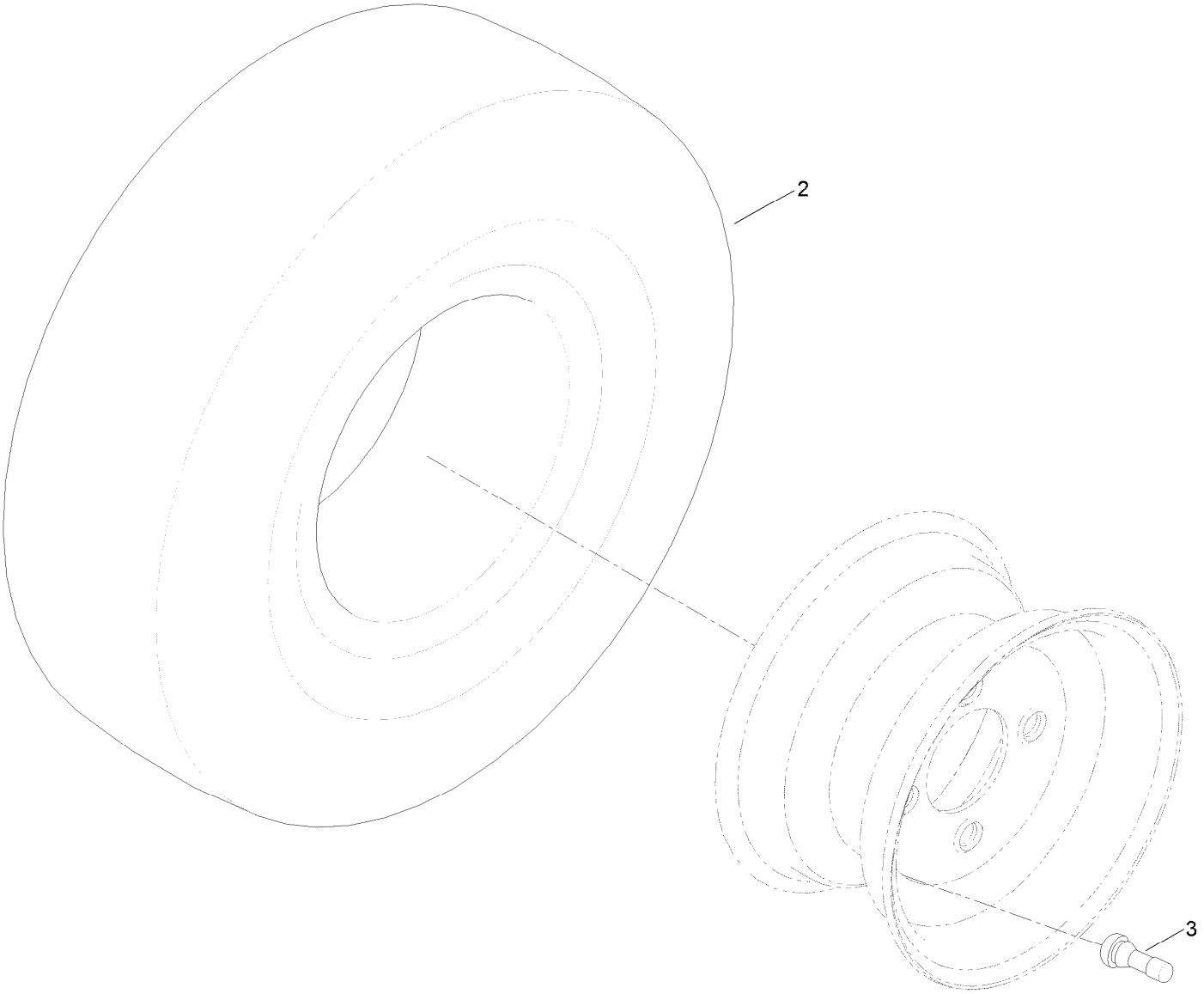

# 2 Ply Wheel and Tire Assembly No. 131-3670 (continued)

| Ref. | Part Number | Qty. | Description |
|---|---|---|---|
| 2 | 131-3677 | 1 | Tire-2 Ply |
| 3 | 232-27 | 1 | Stem-Valve |

# Clutch Assembly

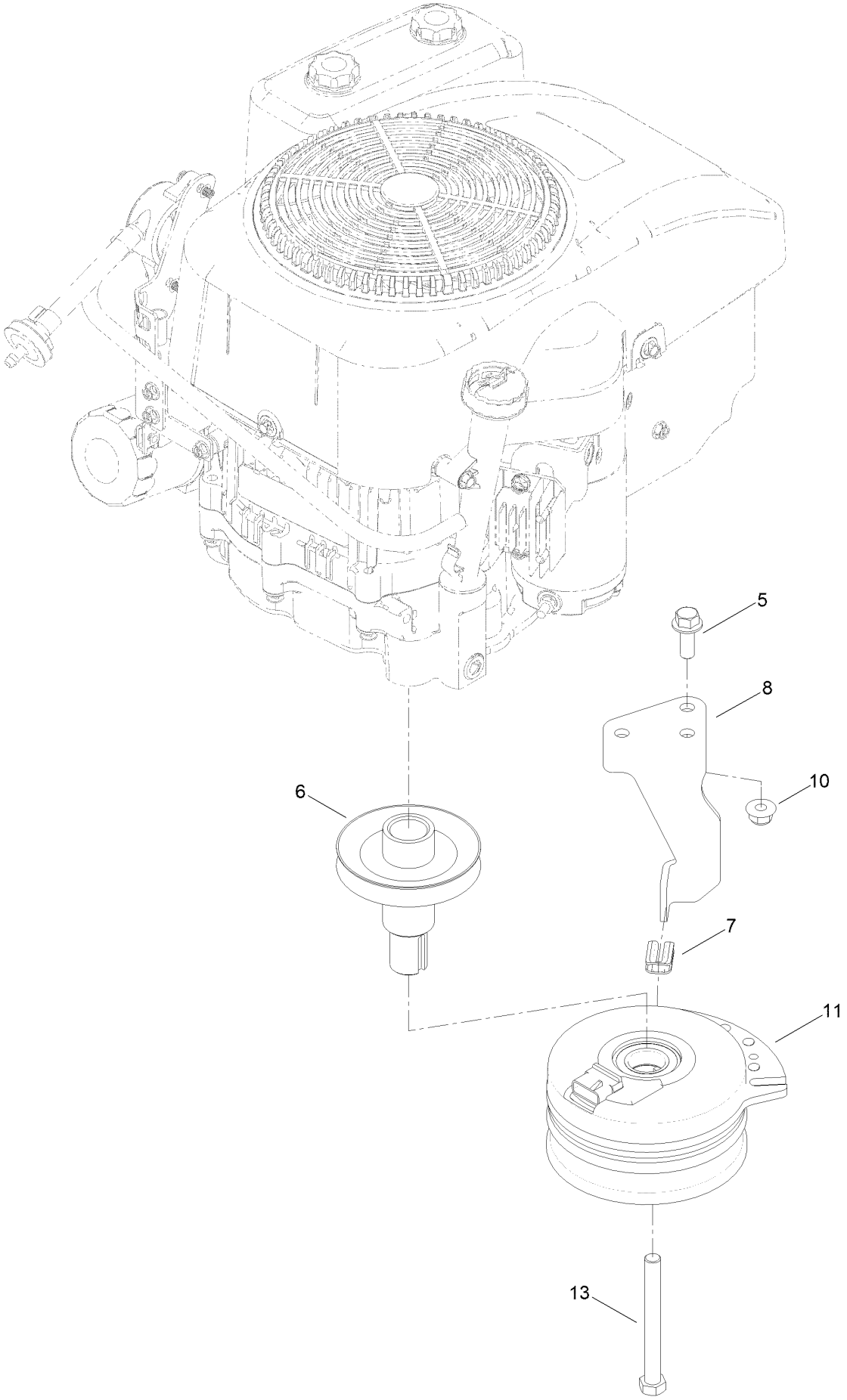

# Clutch Assembly (continued)

| Ref. | Part Number | Qty. | Description |
|---|---|---|---|
| 5 | 3234-42 | 1 | Screw-HHF |
| 6 | 119-3318 | 1 | Pulley-Engine |
| 7 | 120-2217 | 1 | Isolator-Clutch |
| 8 | 119-8884 | 1 | Stop-Clutch |
| 10 | 104-8301 | 1 | Nut-Flange, NI |
| 11 | 125-0038 | 1 | Clutch-Electric |
| 13 | 3212-16 | 1 | Screw-HH |

# Engine and Muffler Assembly

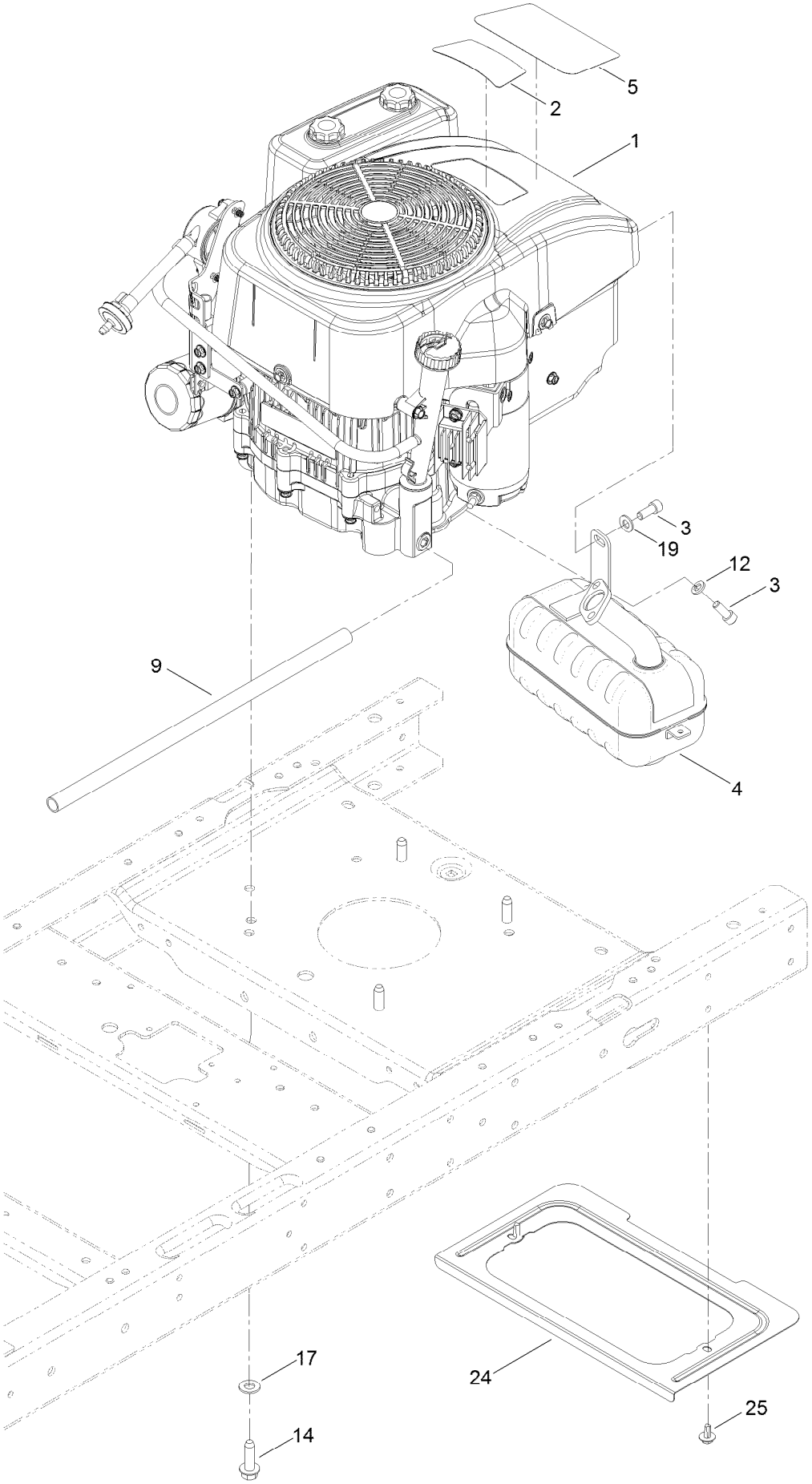

# Engine and Muffler Assembly (continued)

| Ref. | Part Number | Qty. | Description |
|---|---|---|---|
| 1 | 127-9358 | 1 | Engine-1P92F-1 |
| 2 | 125-1700 | 1 | Decal-Engine |
| 3 | 3274-10 | 3 | Screw-HSH |
| 4 | 117-7412 | 1 | Muffler |
| 5 | 130-0682 | 1 | Decal-Engine Displacement |
| 9 | 106-7022 | 1 | Tube-Drain, Oil |
| 12 | 3253-4 | 2 | Washer-Lock |
| 14 | 32144-109 | 4 | Screw-Taptite |
| 17 | 3256-24 | 3 | Washer-Flat |
| 19 | 3256-23 | 1 | Washer-Flat |
| 24 | 131-1071-03 | 1 | Shield-Heat |
| 25 | 46-8560 | 2 | Screw-HHFTF |

# Fuel System Assembly
# Engine Assembly No. 127-9358

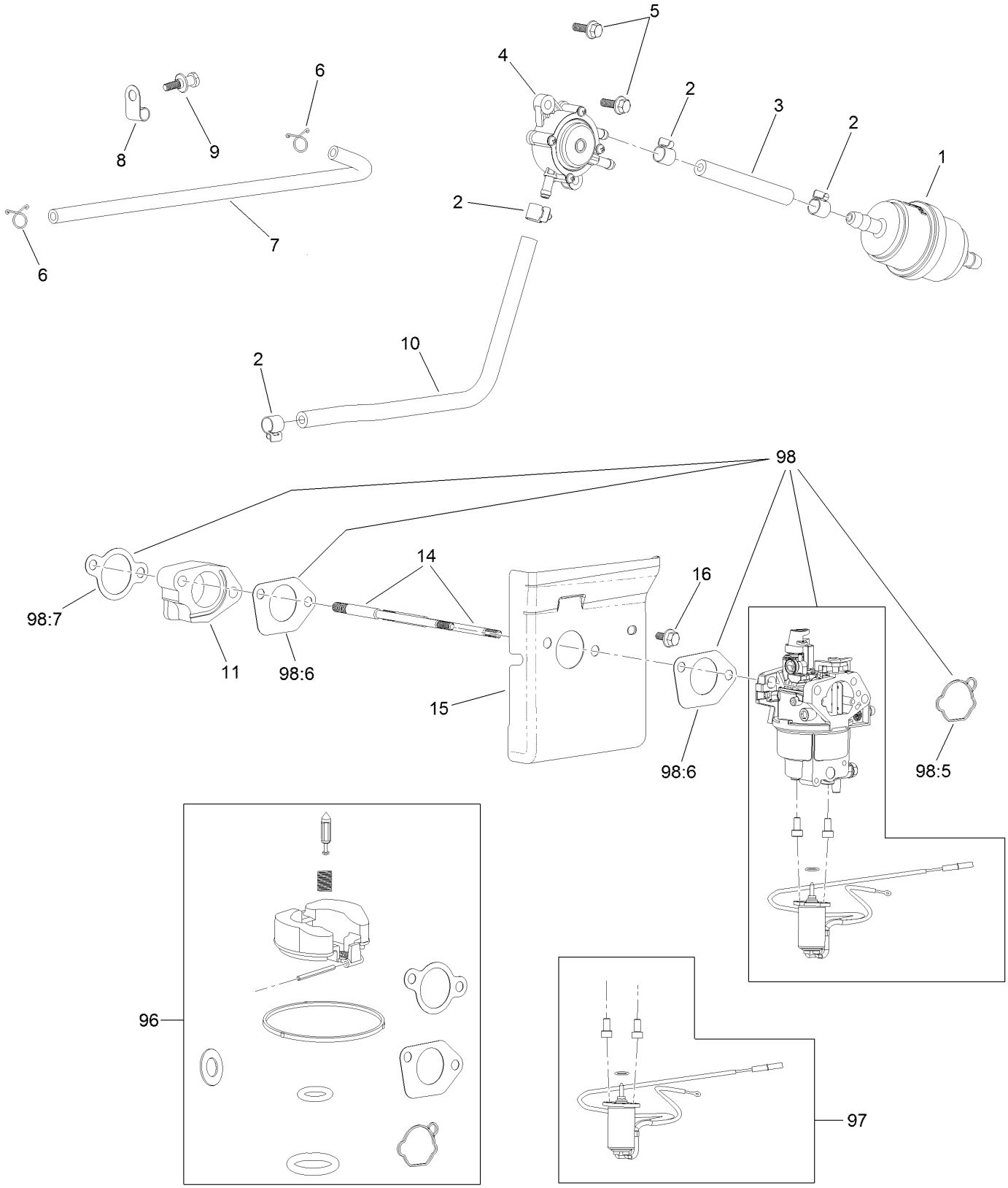

# Fuel System Assembly
# Engine Assembly No. 127-9358 (continued)

| Ref. | Part Number | Qty. | Description |
|---|---|---|---|
| 1 | 127-9204 | 1 | Filter-Fuel |
| 2 | 120-4251 | 4 | Clamp-Fuel Line |
| 3 | 120-4371 | 1 | Line-Fuel |
| 4 | 120-4353 | 1 | Pump-Pulse, Fuel |
| 5 | 120-4232 | 2 | Screw-HHF |
| 6 | 121-0114 | 2 | Clamp-Hose |
| 7 | 120-4372 | 1 | Line-Pulse |
| 8 | 120-4287 | 1 | Clamp-J |
| 9 | 120-4217 | 1 | Screw-Shoulder, HH |
| 10 | 120-4370 | 1 | Line-Fuel |
| 11 | 120-4249 | 1 | Insulator-Carburetor |
| 14 | 120-4202 | 2 | Stud-Mount, Carburetor |
| 15 | 120-4248 | 1 | Shield-Heat |
| 16 | 120-4216 | 1 | Screw-HHF |
| 96 | 127-9194 | 1 | Carb Repair Kit With Gaskets |
| 97 | 127-9190 | 1 | Solenoid Kit |
| 98 | 127-9183 | 1 | Carburetor Kit |
| 98:5 | 127-9185 | 1 | Gasket-Carburetor |
| 98:6 | 120-4247 | 2 | Gasket-Carburetor |
| 98:7 | 120-4250 | 1 | Gasket-Carburetor |
| 99 | 121-4243 | 1 | High Altitude Kit-1P92 ● |

● Not illustrated

# Air Intake and Filtration Assembly
# Engine Assembly No. 127-9358

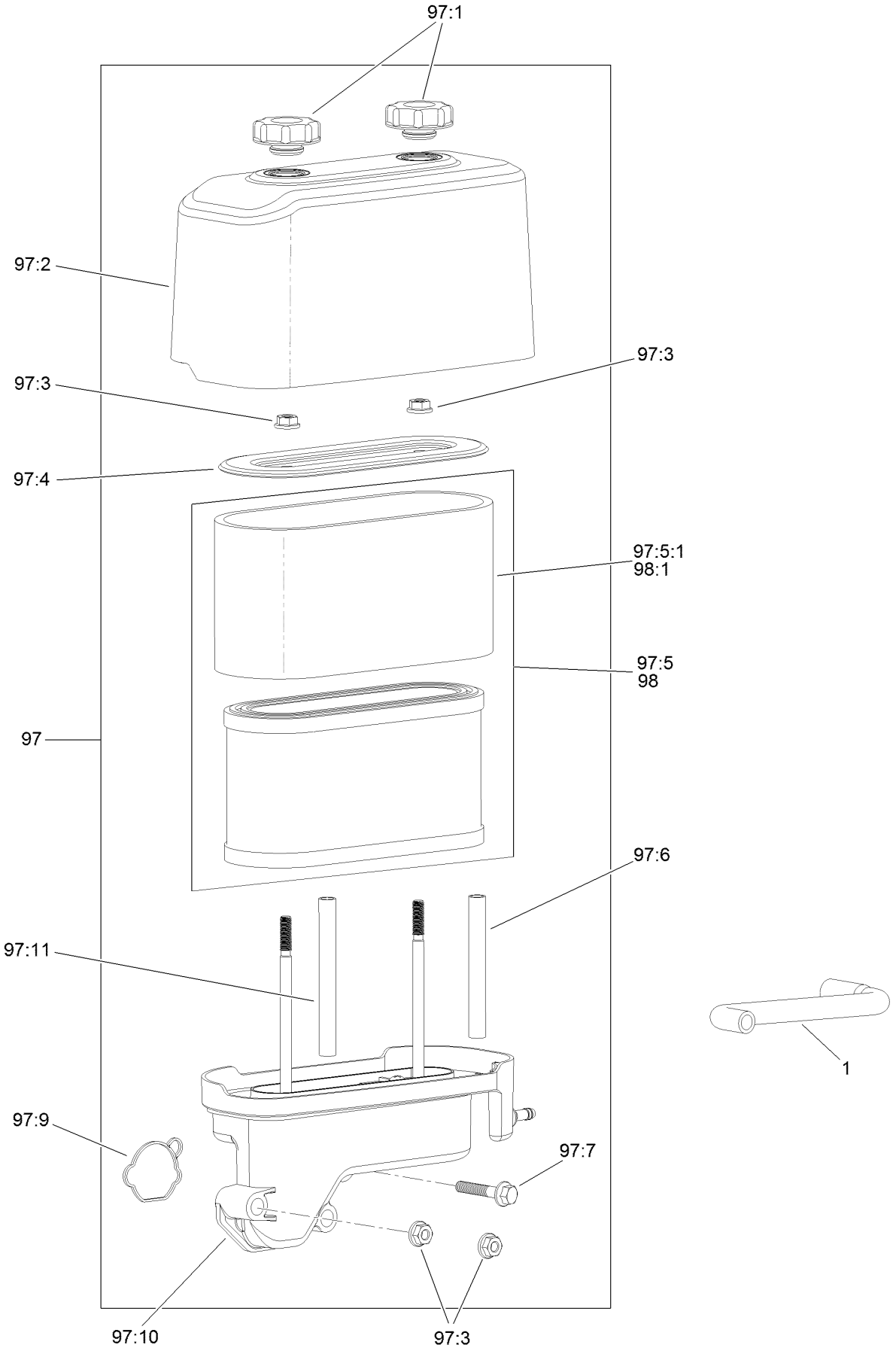

# Air Intake and Filtration Assembly
# Engine Assembly No. 127-9358 (continued)

| Ref. | Part Number | Qty. | Description |
|---|---|---|---|
| 1 | 120-4255 | 1 | Tube-Breather |
| 97 | 127-9186 | 1 | Air Cleaner Kit |
| 97:1 | 120-4312 | 2 | Nut-Speed |
| 97:2 | 120-4311 | 1 | Cover-Filter, Air |
| 97:3 | 120-4236 | 4 | Nut-Flange |
| 97:4 | 120-4310 | 1 | Retainer-Air Filter |
| 97:5 | 127-9193 | 1 | Air Filter Kit |
| 97:5:1 | 120-4309 | 1 | Prefilter |

| Ref. | Part Number | Qty. | Description |
|---|---|---|---|
| 97:6 | 120-4333 | 1 | Spacer-Filter, Air |
| 97:7 | 120-4284 | 1 | Screw-HHF |
| 97:9 | 127-9185 | 1 | Gasket-Carburetor |
| 97:10 | 127-9191 | 1 | Base-Filter, Air |
| 97:11 | 120-4334 | 1 | Spacer-Filter, Air |
| 98 | 127-9193 | 1 | Air Filter Kit |
| 98:1 | 120-4309 | 1 | Prefilter |

# Ignition and Electrical Assembly
# Engine Assembly No. 127-9358

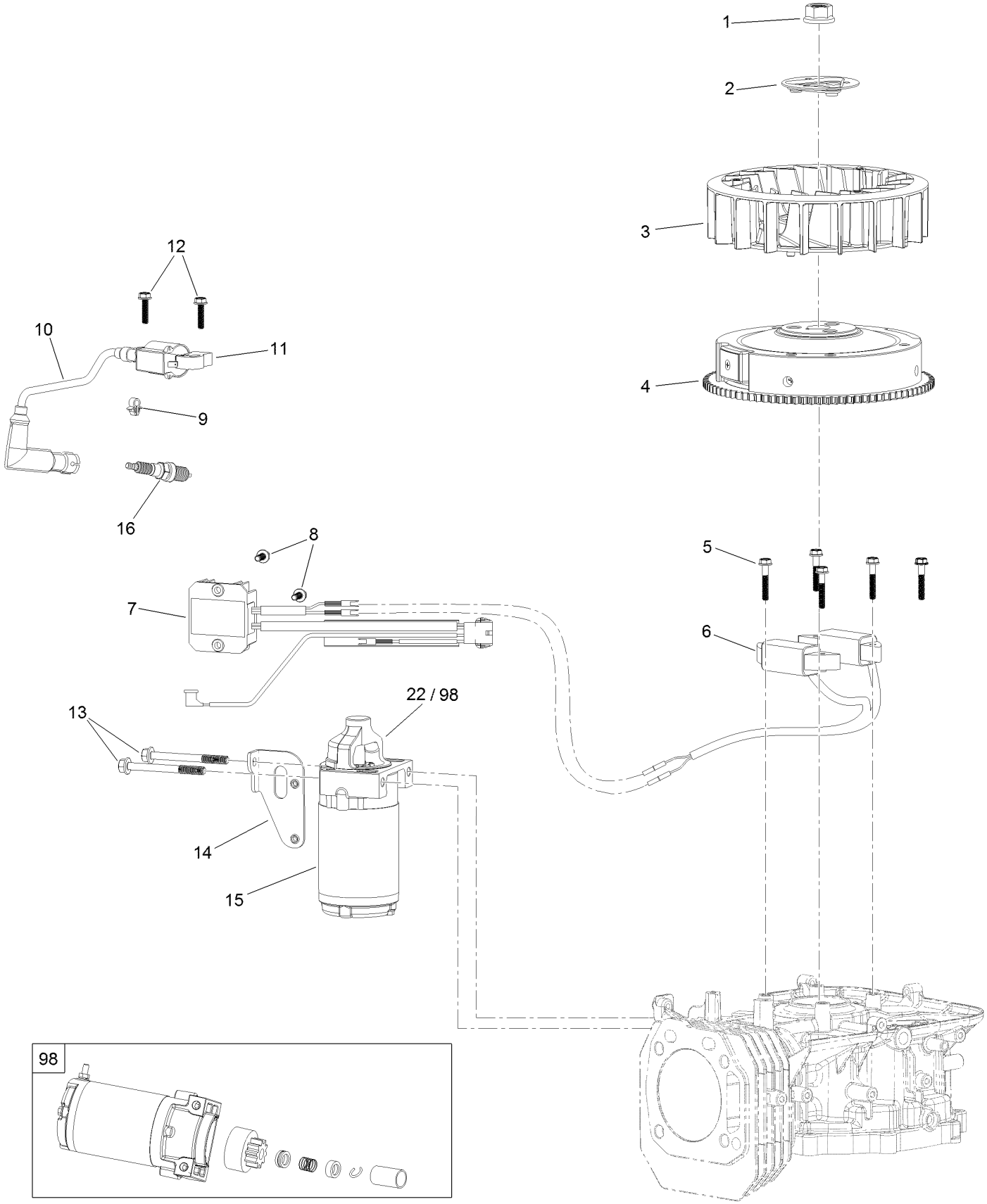

# Ignition and Electrical Assembly
# Engine Assembly No. 127-9358 (continued)

| Ref. | Part Number | Qty. | Description |
|---|---|---|---|
| 1 | 120-4213 | 1 | Nut-Flange |
| 2 | 120-4212 | 1 | Pulley-Starter |
| 3 | 120-4211 | 1 | Fan-Cooling |
| 4 | 120-4399 | 1 | Flywheel |
| 5 | 120-4223 | 4 | Screw-HHF |
| 6 | 127-9176 | 1 | Alternator |
| 7 | 127-9178 | 1 | Voltage Regulator |
| 8 | 120-4216 | 3 | Screw-HHF |
| 9 | 120-4316 | 1 | Clamp-Wire |
| 10 | 120-4226 | 1 | Boot-Plug, Spark |
| 11 | 127-9177 | 1 | Ignition Coil ASM |
| 12 | 120-4225 | 2 | Screw-HHF |
| 13 | 120-4231 | 2 | Screw-HHF |
| 14 | 120-4230 | 1 | Bracket-Starter |
| 15 | 120-4339 | 1 | Starter-Electric |
| 16 | 77-7330 | 1 | Plug-Spark |
| 22 | 120-4398 | 1 | Pinion |
| 98 | 120-4392 | 1 | Starter Repair Kit |

# Crankcase Assembly
# Engine Assembly No. 127-9358

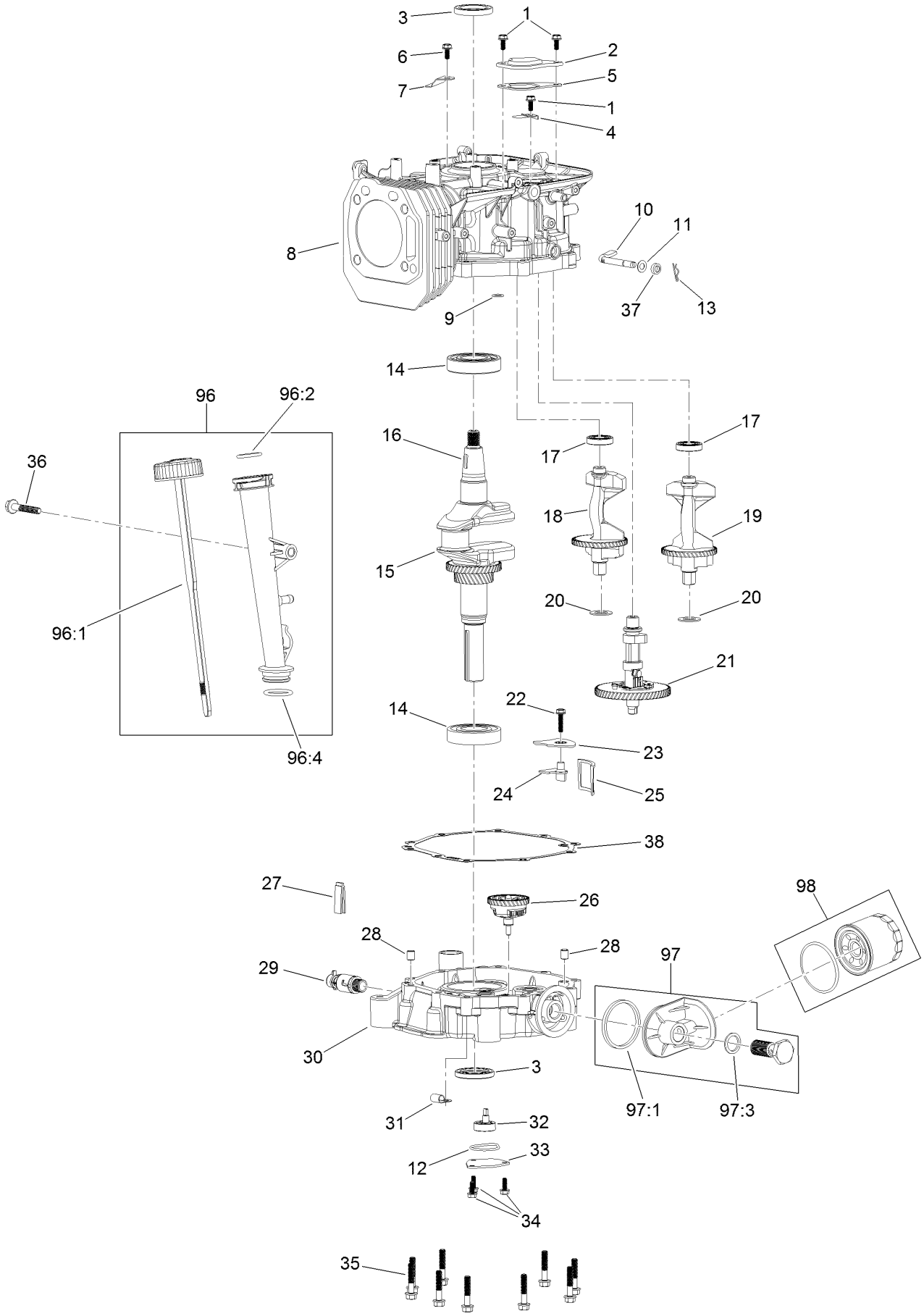

# Crankcase Assembly
# Engine Assembly No. 127-9358 (continued)

| Ref. | Part Number | Qty. | Description |
|---|---|---|---|
| 1 | 120-4216 | 3 | Screw-HHF |
| 2 | 120-4265 | 1 | Plate-Breather |
| 3 | 120-4267 | 2 | Seal-Oil |
| 4 | 120-4263 | 1 | Valve-Reed |
| 5 | 120-4264 | 1 | Gasket-Breather |
| 6 | 120-4234 | 1 | Screw-HHF |
| 7 | 120-4268 | 1 | Retainer |
| 8 | 120-4336 | 1 | Crankcase |
| 9 | 120-4262 | 1 | O-Ring |
| 10 | 120-4382 | 1 | Shaft-Governor |
| 11 | 120-4258 | 1 | Washer-Plain |
| 12 | 120-4343 | 1 | Seal-Pump, Oil |
| 13 | 120-4256 | 1 | Pin-Hair |
| 14 | 120-4261 | 2 | Bearing-Ball |
| 15 | 120-4293 | 1 | Crankshaft |
| 16 | 120-4320 | 1 | Key-Woodruff |
| 17 | 120-4266 | 2 | Bearing-Ball |
| 18 | 127-9179 | 1 | Shaft-Balance, R |
| 19 | 127-9180 | 1 | Shaft-Balance, L |
| 20 | 120-4295 | 2 | Washer |
| 21 | 120-4297 | 1 | Camshaft |
| 22 | 120-4225 | 1 | Screw-HHF |
| 23 | 120-4342 | 1 | Cover-Strainer, Oil |
| 24 | 120-4279 | 1 | Plate-Baffle, Oil |
| 25 | 120-4341 | 1 | Strainer-Oil |
| 26 | 120-4338 | 1 | Gear-Governor |
| 27 | 120-4275 | 1 | Deflector-Oil, Rubber |
| 28 | 120-4274 | 2 | Pin-Dowel |
| 29 | 120-4321 | 1 | Valve-Drain, Oil |
| 30 | 120-4327 | 1 | Cover-Crankcase |
| 31 | 127-9188 | 1 | Clamp-Hose |
| 32 | 120-4344 | 1 | Oil Pump ASM |
| 33 | 120-4270 | 1 | Cover-Pump, Oil |
| 34 | 120-4232 | 3 | Screw-HHF |
| 35 | 120-4273 | 10 | Screw-HHF |
| 36 | 120-4284 | 1 | Screw-HHF |
| 37 | 120-4257 | 1 | Seal-Oil |
| 38 | 120-4260 | 1 | Gasket-Crankcase |
| 96 | 120-4355 | 1 | Dipstick And Tube Kit |
| 96:1 | 120-4350 | 1 | Dipstick ASM |
| 96:2 | 120-4348 | 1 | O-Ring |
| 96:4 | 120-4282 | 1 | O-Ring |
| 97 | 120-4363 | 1 | Oil Adaptor Kit |
| 97:1 | 120-4362 | 1 | Seal-Adaptor, Oil |
| 97:3 | 120-4360 | 1 | Washer-Filter, Oil |
| 98 | 120-4276 | 1 | Filter-Oil |

# Governor Control Assembly
# Engine Assembly No. 127-9358

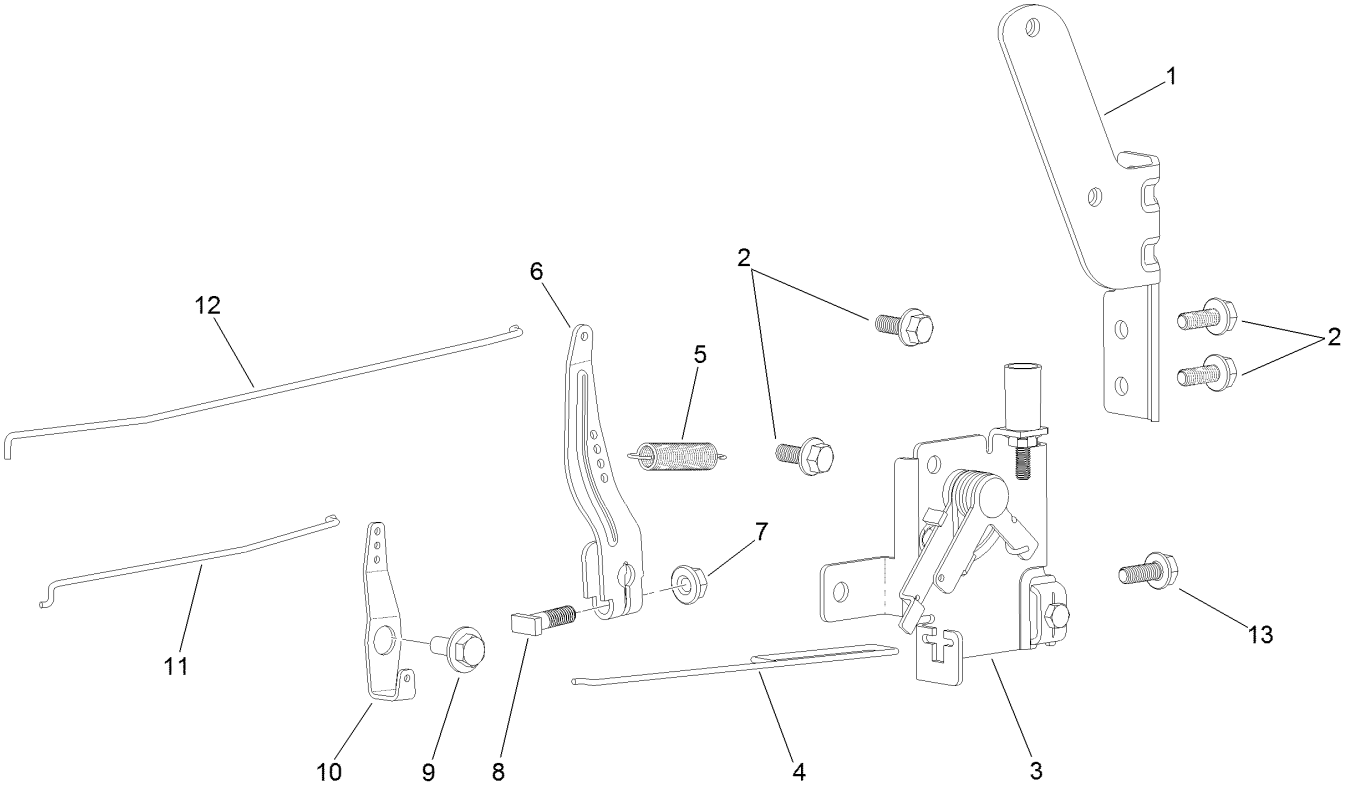

# Governor Control Assembly
# Engine Assembly No. 127-9358 (continued)

| Ref. | Part Number | Qty. | Description |
|---|---|---|---|
| 1 | 120-4357 | 1 | Bracket-Pump, Fuel |
| 2 | 120-4234 | 4 | Screw-HHF |
| 3 | 120-4358 | 1 | Control-Throttle |
| 4 | 120-4243 | 1 | Rod-Throttle |
| 5 | 120-4337 | 1 | Spring-Governor |
| 6 | 120-4237 | 1 | Arm-Governor |
| 7 | 120-4236 | 1 | Nut-Flange |
| 8 | 120-4238 | 1 | Bolt-Arm, Governor |
| 9 | 120-4241 | 1 | Screw-Shoulder, HHF |
| 10 | 120-4242 | 1 | Bellcrank-Choke |
| 11 | 120-4240 | 1 | Rod-Choke |
| 12 | 120-4239 | 1 | Rod-Governor |
| 13 | 120-4232 | 1 | Screw-HHF |

# Piston and Cylinder Head Assembly
# Engine Assembly No. 127-9358

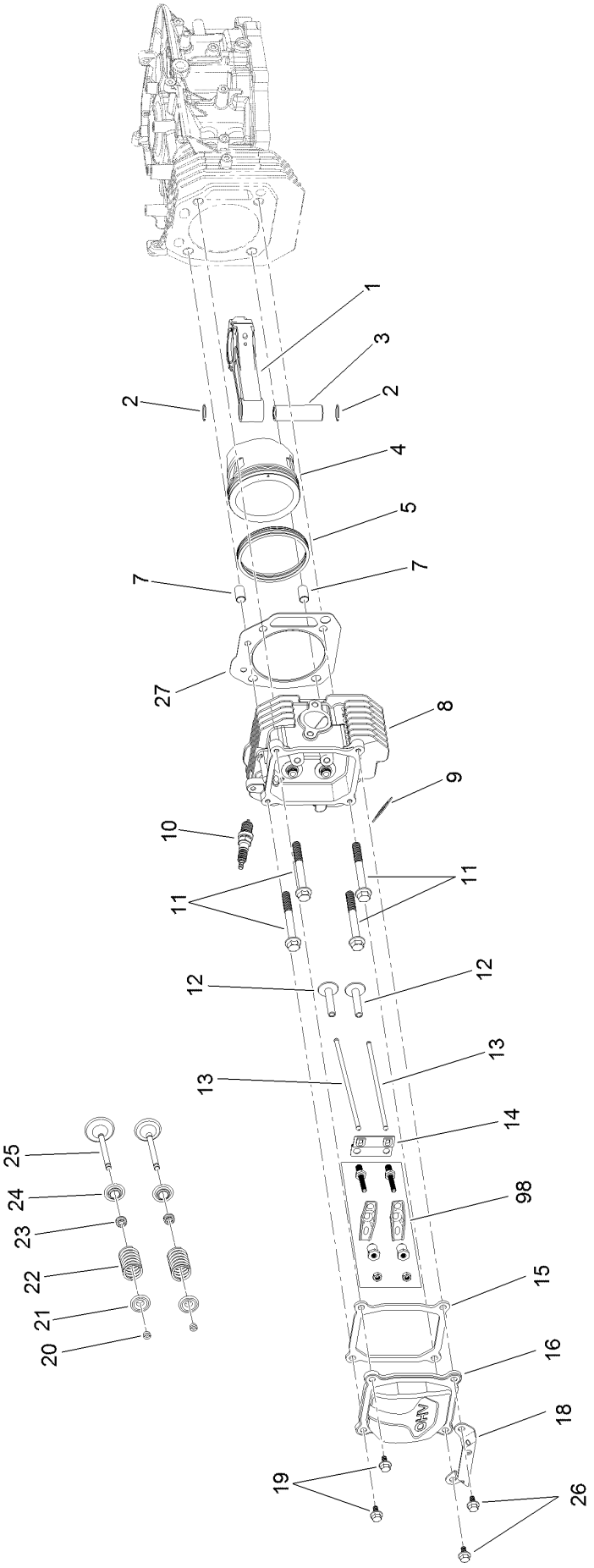

# Piston and Cylinder Head Assembly
# Engine Assembly No. 127-9358 (continued)

| Ref. | Part Number | Qty. | Description |
|---|---|---|---|
| 1 | 120-4292 | 1 | Connecting Rod ASM |
| 2 | 120-4288 | 2 | Ring-Retaining, Piston Pin |
| 3 | 120-4291 | 1 | Pin-Piston |
| 4 | 120-4290 | 1 | Piston |
| 5 | 120-4289 | 1 | Ring Set |
| 7 | 120-4200 | 2 | Pin-Dowel |
| 8 | 120-4203 | 1 | Head-Cylinder |
| 9 | 120-4317 | 1 | Gasket-Exhaust |
| 10 | 120-4204 | 1 | Plug-Spark |
| 11 | 120-4205 | 4 | Screw-HHF |
| 12 | 120-4298 | 2 | Lifter-Valve |
| 13 | 120-4340 | 2 | Rod-Push |
| 14 | 120-4300 | 1 | Plate |
| 15 | 120-4206 | 1 | Gasket-Cover, Valve |
| 16 | 120-4207 | 1 | Cover-Valve |
| 18 | 120-4345 | 1 | Bracket-Muffler |
| 19 | 120-4209 | 2 | Screw-Shoulder, HHF |
| 20 | 120-4307 | 2 | Keeper-Valve |
| 21 | 120-4306 | 2 | Retainer-Spring, Valve |
| 22 | 120-4305 | 2 | Spring-Valve |
| 23 | 120-4304 | 2 | Seal-Stem, Valve |
| 24 | 120-4303 | 2 | Seat-Spring, Valve |
| 25 | 120-4302 | 2 | Valve Set |
| 26 | 120-4210 | 2 | Screw-Shoulder, HHF |
| 27 | 120-4201 | 1 | Gasket-Cyclinder |
| 98 | 120-4301 | 1 | Rocker Arm Kit |

# Blower Housing Assembly
# Engine Assembly No. 127-9358

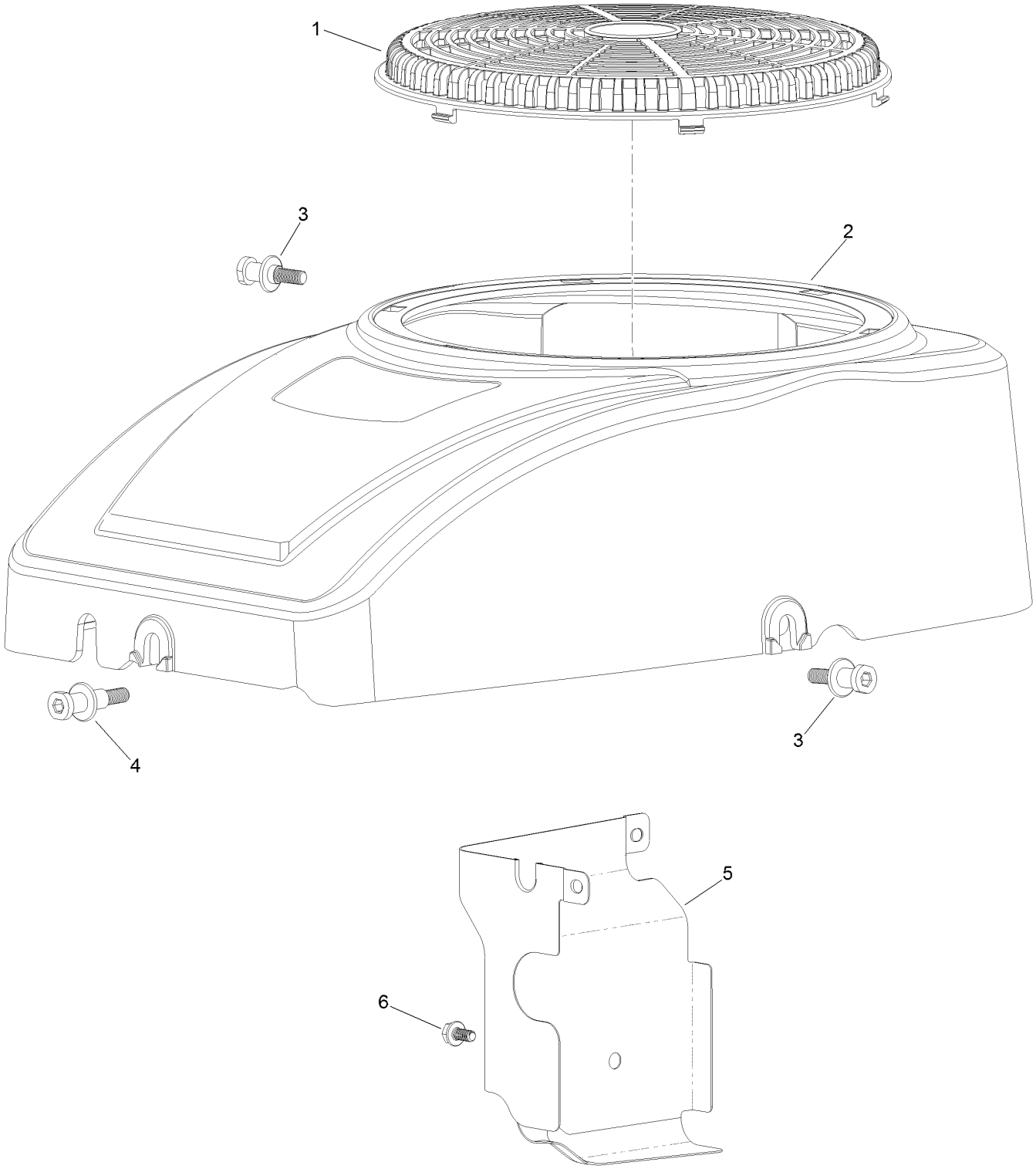

# Blower Housing Assembly
# Engine Assembly No. 127-9358 (continued)

| Ref. | Part Number | Qty. | Description |
|---|---|---|---|
| 1 | 120-4219 | 1 | Screen-Stationary |
| 2 | 120-4218 | 1 | Shroud-Fan |
| 3 | 120-4217 | 2 | Screw-Shoulder, HH |
| 4 | 120-4214 | 1 | Screw-Shoulder, HH |
| 5 | 120-4215 | 1 | Shield |
| 6 | 120-4216 | 1 | Screw-HHF |

# Gasket and Seal Kit
# Engine Assembly No. 127-9358

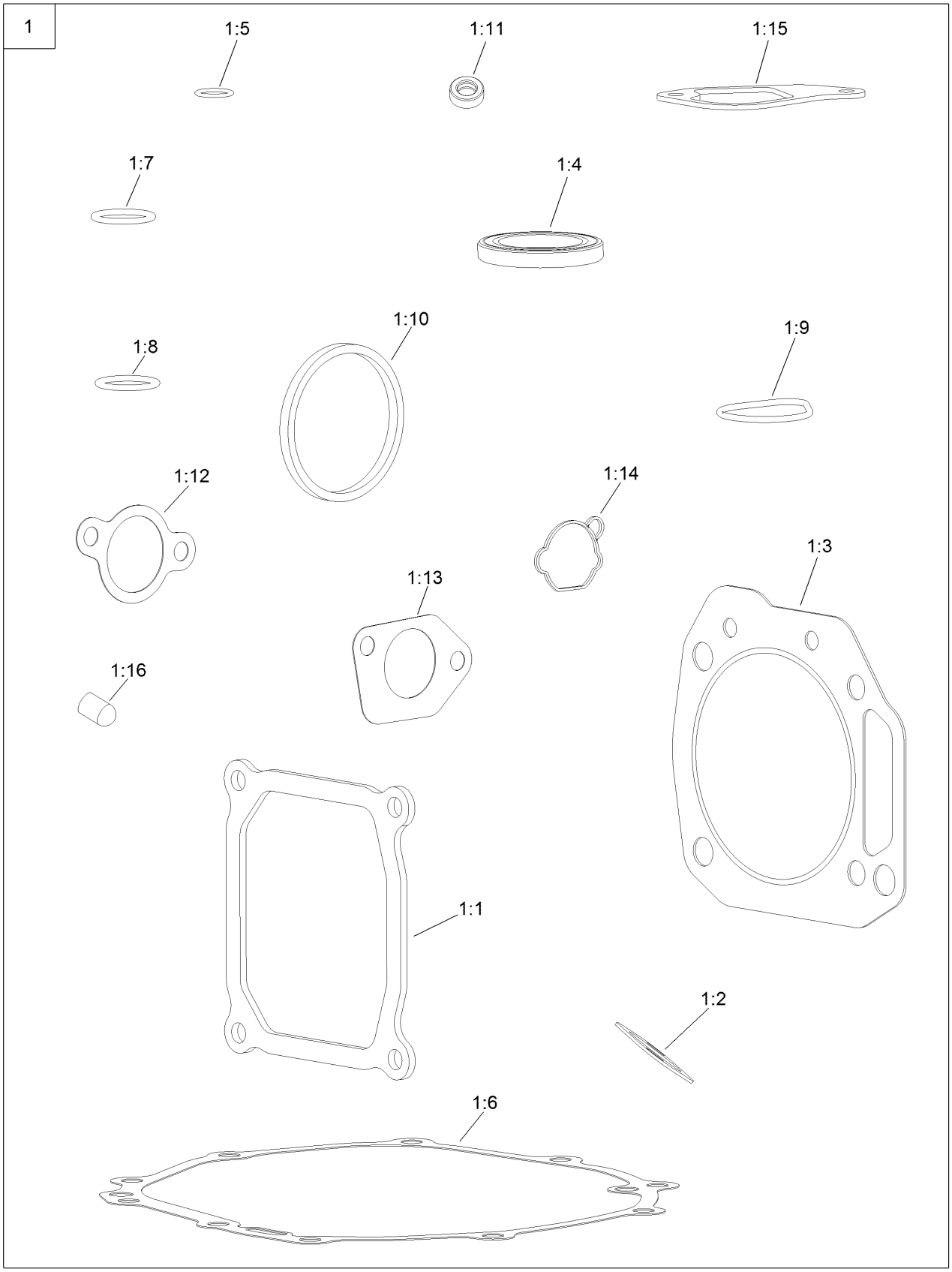

# Gasket and Seal Kit
# Engine Assembly No. 127-9358 (continued)

| Ref. | Part Number | Qty. | Description |
|---|---|---|---|
| 1 | 127-9192 | 1 | Gasket And Seal Kit |
| 1:1 | 120-4206 | 1 | Gasket-Cover, Valve |
| 1:2 | 120-4317 | 1 | Gasket-Exhaust |
| 1:3 | 120-4201 | 1 | Gasket-Cyclinder |
| 1:4 | 120-4267 | 2 | Seal-Oil |
| 1:5 | 120-4262 | 1 | O-Ring |
| 1:6 | 120-4260 | 1 | Gasket-Crankcase |
| 1:7 | 120-4348 | 1 | O-Ring |
| 1:8 | 120-4282 | 1 | O-Ring |
| 1:9 | 120-4343 | 1 | Seal-Pump, Oil |
| 1:10 | 120-4362 | 1 | Seal-Adaptor, Oil |
| 1:11 | 120-4257 | 1 | Seal-Oil |
| 1:12 | 120-4250 | 1 | Gasket-Carburetor |
| 1:13 | 120-4247 | 2 | Gasket-Carburetor |
| 1:14 | 127-9185 | 1 | Gasket-Carburetor |
| 1:15 | 120-4264 | 1 | Gasket-Breather |
| 1:16 | 127-9189 | 1 | Cap-Seal |

# Body Styling and Fuel Tank Assembly

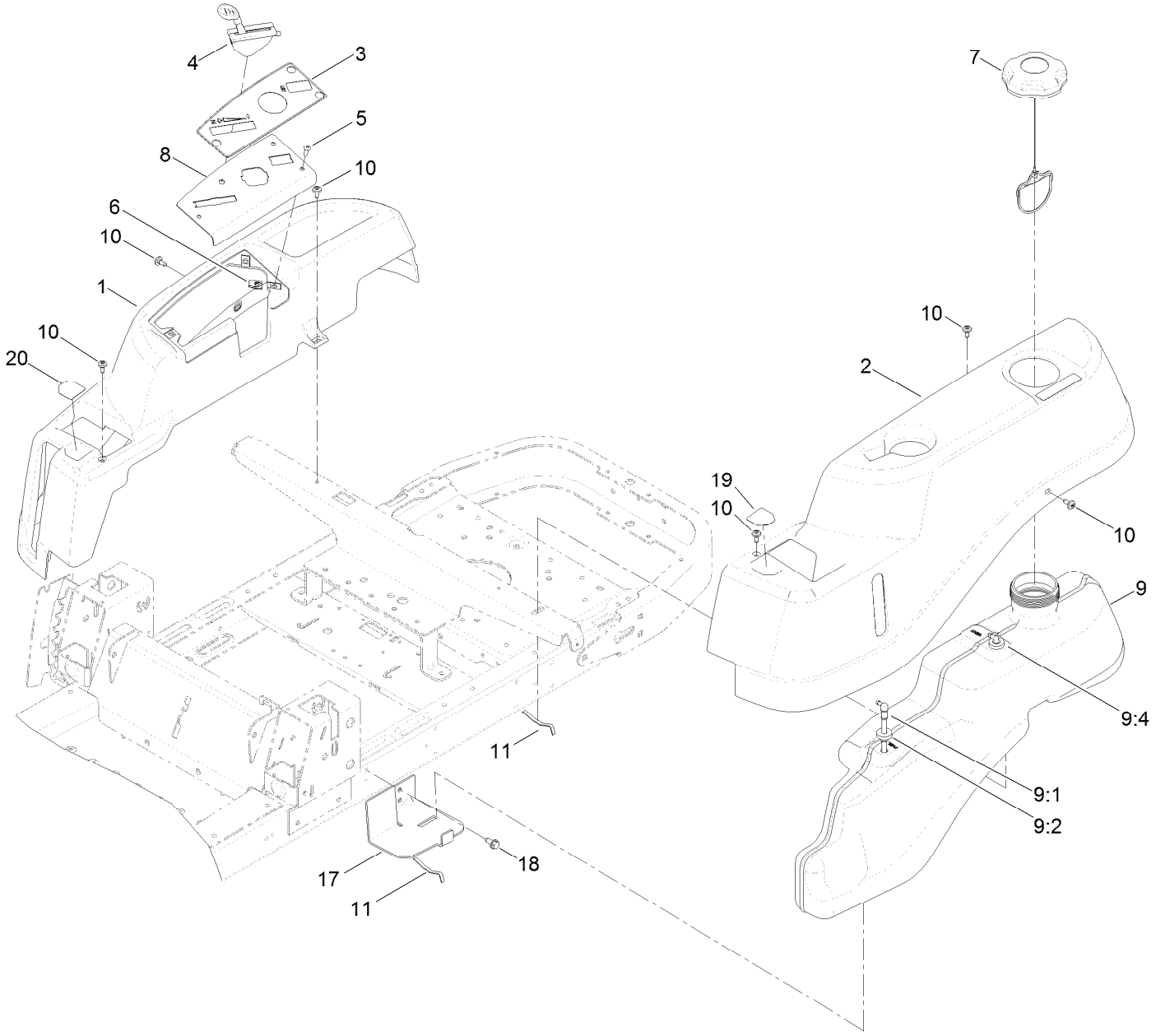

# Body Styling and Fuel Tank Assembly (continued)

| Ref. | Part Number | Qty. | Description |
|---|---|---|---|
| 1 | 119-3335 | 1 | Pod-RH |
| 2 | 119-3334 | 1 | Pod-LH |
| 3 | 121-0771 | 1 | Decal-Panel, Control |
| 4 | 121-0767 | 1 | Cable-Throttle And Choke |
| 5 | 3258-166 | 3 | Screw-PRH |
| 6 | 107069 | 3 | Clip |
| 7 | 120-5461 | 1 | Cap-Fuel, Ratcheting |
| 8 | 119-3378-03 | 1 | Plate-Control |
| 9 | 119-3324 | 1 | Fuel Tank ASM |

| Ref. | Part Number | Qty. | Description |
|---|---|---|---|
| 9:1 | 121-0793 | 1 | Connector-Elbow, 90 DEG |
| 9:2 | 46-6560 | 2 | Bushing |
| 9:4 | 117-7400 | 1 | Fitting-Plastic |
| 10 | 120-7950 | 6 | Screw-Shoulder |
| 11 | 609830 | 2 | Spring |
| 17 | 119-3476-03 | 1 | Support-Tank, Front |
| 18 | 32144-70 | 2 | Screw-HWHTF |
| 19 | 119-8814 | 1 | Decal-Control Lever, LH |
| 20 | 119-8815 | 1 | Decal-Control Lever, RH |

# Fuel Delivery Assembly

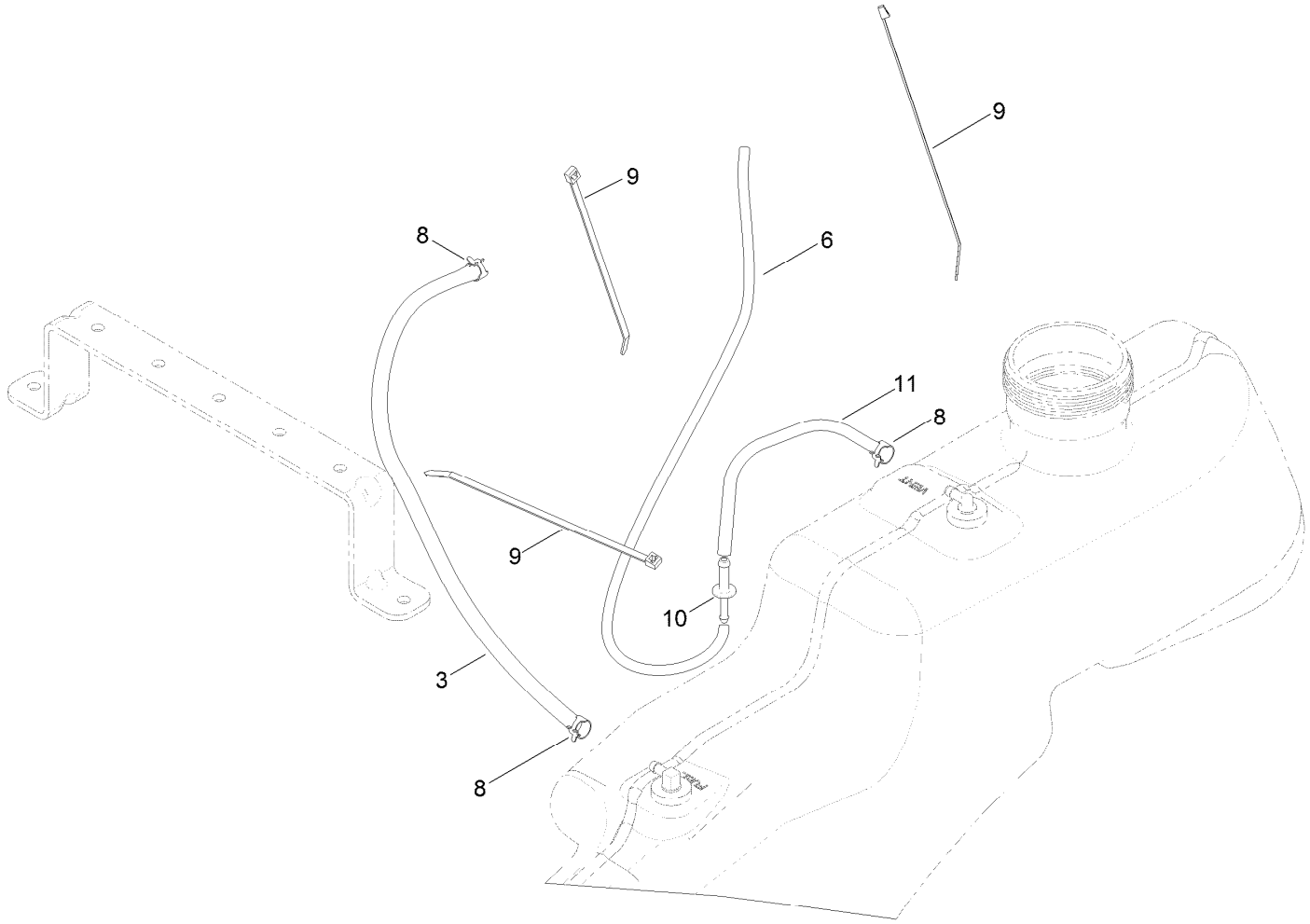

# Fuel Delivery Assembly (continued)

| Ref. | Part Number | Qty. | Description |
|---|---|---|---|
| 3 | 109-0307 | 1 | Hose-Fuel |
| 6 | 110-3254 | 1 | Hose-Fuel |
| 8 | 2412-98 | 3 | Clamp-Hose |
| 9 | 614249 | 3 | Tie-Cable |
| 10 | 117-5399 | 1 | Adaptor-Orifice |
| 11 | 110-1876 | 1 | Hose-Fuel |

# Battery and Electrical Assembly

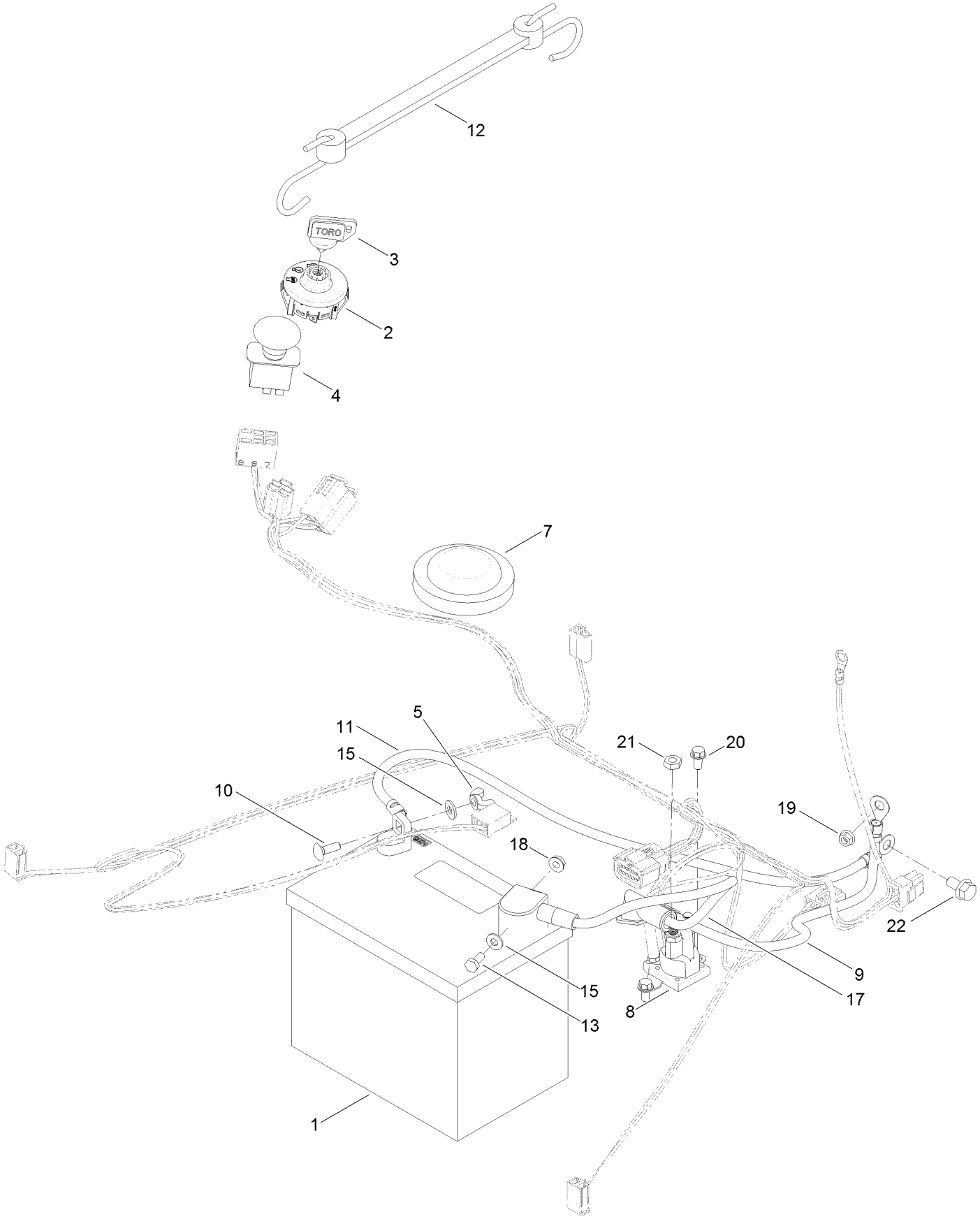

# Battery and Electrical Assembly (continued)

| Ref. | Part Number | Qty. | Description |
|---|---|---|---|
| 1 | 105-1692 | 1 | Battery-Dry |
| 2 | 117-2221 | 1 | Switch-Ignition |
| 3 | 63-8360 | 1 | Key-Ignition |
| 4 | 103-5221 | 1 | Switch-PTO |
| 5 | 32103-22 | 1 | Nut-Wing |
| 7 | 100-3524 | 1 | Switch-Seat |
| 8 | 117-1197 | 1 | Solenoid |
| 9 | 121-0711 | 1 | Cable-Battery, Positive |
| 10 | 3229-1 | 1 | Bolt-CARR |
| 11 | 119-8899 | 1 | Cable-Battery, Black |
| 12 | 104-2466 | 1 | Holddown-Battery |
| 13 | 321-3 | 1 | Screw-HH |
| 15 | 3256-22 | 2 | Washer-Flat |
| 17 | 119-8897 | 1 | Cable-Battery, Red |
| 18 | 32128-33 | 1 | Nut-HF |
| 19 | 33003-00 | 1 | Nut-HF |
| 20 | 32144-4 | 2 | Screw-HWH |
| 21 | 3220-2 | 2 | Nut-Jam |
| 22 | 3234-14 | 1 | Screw-HHF |

# Fuse and Wire Harness Assembly

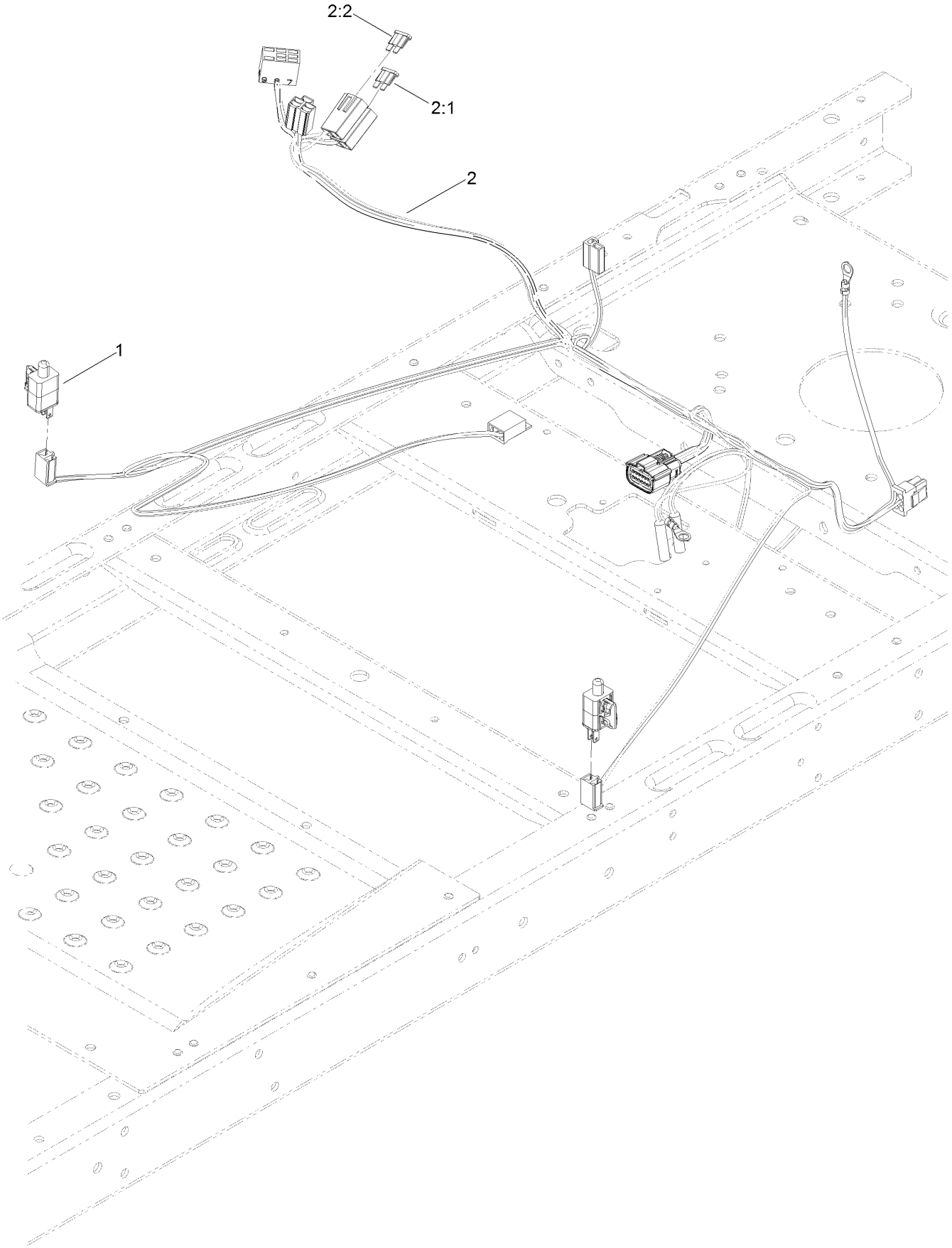

# Fuse and Wire Harness Assembly (continued)

| Ref. | Part Number | Qty. | Description |
|---|---|---|---|
| 1 | 110-6765 | 2 | Switch |
| 2 | 130-7013 | 1 | Harness-Wire ● |

| Ref. | Part Number | Qty. | Description |
|---|---|---|---|
| 2:1 | 109103 | 1 | Fuse-Blade, 30 Amp |
| 2:2 | 109102 | 1 | Fuse-Blade, 25 Amp |

● Use dielectric grease on all unsealed connectors and terminals only. Do not apply in sealed connectors.

# 32 Inch Deck Assembly

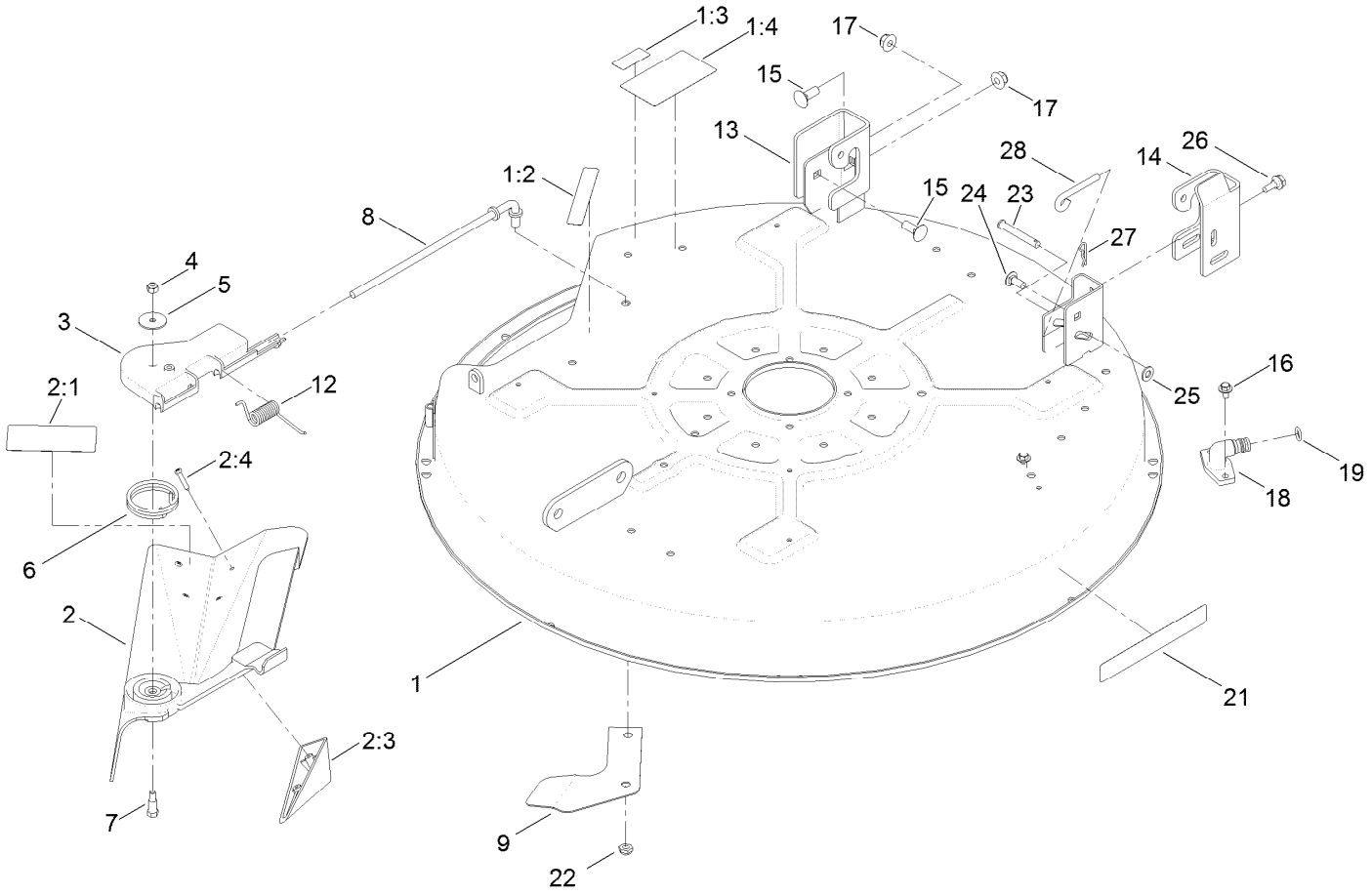

# 32 Inch Deck Assembly (continued)

| Ref. | Part Number | Qty. | Description |
|---|---|---|---|
| 1 | 131-3602 | 1 | 32 Inch Deck And Decal ASM |
| 1:2 | 93-7009 | 1 | Decal-Danger |
| 1:3 | 114-1606 | 2 | Decal-Danger |
| 1:4 | 110-6691 | 2 | Decal-Danger |
| 2 | 120-2298 | 1 | 32 Inch Deflector ASM |
| 2:1 | 110-6691 | 1 | Decal-Danger |
| 2:3 | 93-7696 | 2 | Kicker |
| 2:4 | 93-0231 | 4 | Screw-PPH |
| 3 | 88-4540 | 1 | Pivot-Hinge, Deflector |
| 4 | 3296-42 | 1 | Nut-Lock, NI |
| 5 | 3256-55 | 1 | Washer-Flat |
| 6 | 88-6160 | 1 | Spring-Torsion |
| 7 | 92-8916 | 1 | Bolt-Shoulder |
| 8 | 119-8858 | 1 | Rod-Pivot |
| 9 | 119-8877-03 | 1 | Ramp-Deflector |

| Ref. | Part Number | Qty. | Description |
|---|---|---|---|
| 12 | 92-2493 | 1 | Spring-Torsion |
| 13 | 131-4138 | 1 | Bracket-Hanger, RH |
| 14 | 131-1091 | 1 | Bracket-Hanger, LH |
| 15 | 3231-2 | 2 | Bolt-CARR |
| 16 | 46-8560 | 2 | Screw-HHFTF |
| 17 | 104-8301 | 2 | Nut-Flange, NI |
| 18 | 95-2747 | 1 | Fitting-Washout |
| 19 | 46-6290 | 1 | O-Ring |
| 21 | 119-2368 | 1 | Decal-Recycler |
| 22 | 3296-59 | 1 | Nut-Lock, NI |
| 23 | 110-0618 | 1 | Pin-Clevis |
| 24 | 3230-23 | 1 | Screw-CARR |
| 25 | 3256-23 | 1 | Washer-Flat |
| 26 | 120-7024 | 1 | Screw-Shoulder, HHF |
| 27 | 1-806003 | 1 | Pin-Cotter |
| 28 | 131-0955 | 1 | Rod-Level, Deck |

# 32 Inch Deck Assembly No. 131-3602

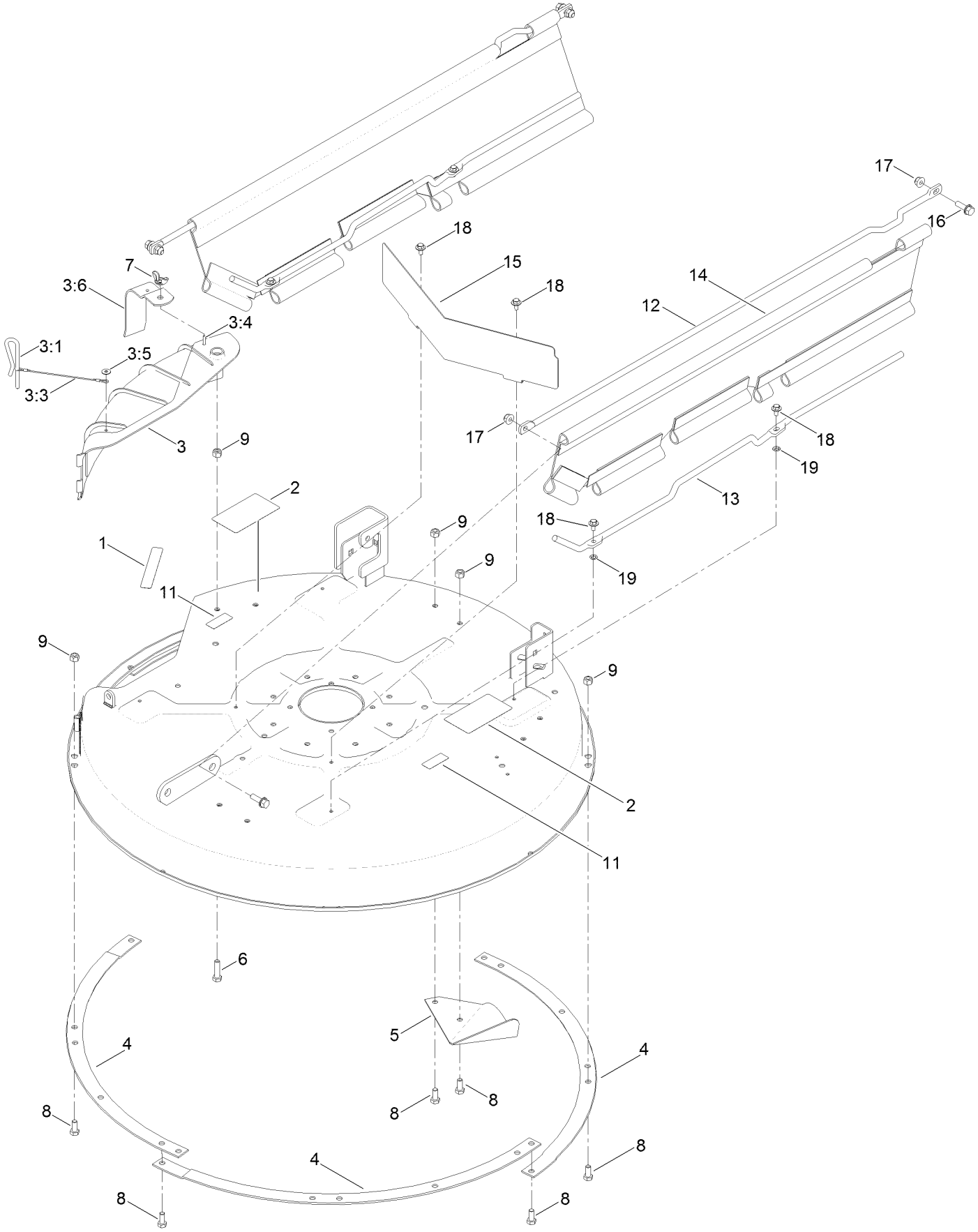

# 32 Inch Deck Assembly No. 131-3602 (continued)

| Ref. | Part Number | Qty. | Description |
|---|---|---|---|
| 1 | 93-7009 | 1 | Decal-Danger |
| 2 | 110-6691 | 2 | Decal-Danger |
| 3 | 82-6151 | 1 | Discharge Cover ASM |
| 3:1 | 28-8130 | 1 | Pin-Locking, Chute |
| 3:3 | 28-8070 | 1 | Lanyard |
| 3:4 | 3290-282 | 2 | Rivet-Blind |
| 3:5 | 3256-49 | 1 | Washer-Flat |
| 3:6 | 83-7010-03 | 1 | Brace |
| 4 | 80-4490-03 | 4 | Ring-Deck |
| 5 | 80-2630-03 | 4 | Kicker |
| 6 | 322-6 | 1 | Screw-HH |
| 7 | 32103-2 | 1 | Nut-Wing |
| 8 | 322-3 | 15 | Screw-HH |
| 9 | 3296-29 | 16 | Nut-Lock, NI |
| 11 | 114-1606 | 2 | Decal-Danger |
| 12 | 131-3669 | 2 | Rod Support, Upper |
| 13 | 131-3681 | 2 | Rod Support, Lower |
| 14 | 131-3685 | 2 | Guard Side |
| 15 | 131-3666-03 | 1 | Front Shield, 32 Deck |
| 16 | 131-4080 | 4 | Screw-HSBH |
| 17 | 104-8300 | 4 | Nut-Flange, NI |
| 18 | 46-8560 | 6 | Screw-HHFTF |
| 19 | 1-803037 | 4 | Nut-Retaining |

# 32 Inch Deck, Belt and Blade Assembly

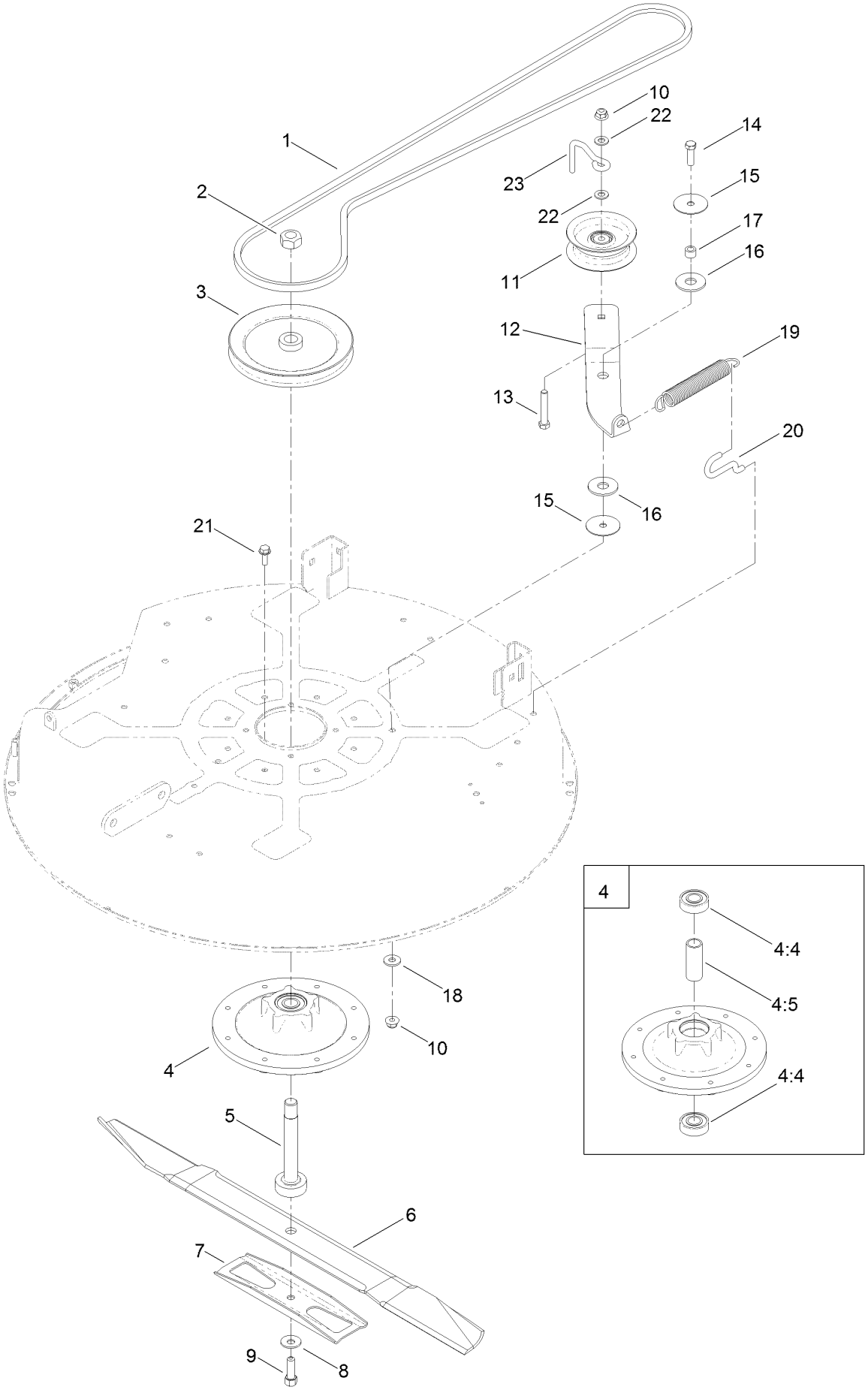

# 32 Inch Deck, Belt and Blade Assembly (continued)

| Ref. | Part Number | Qty. | Description |
|---|---|---|---|
| 1 | 119-8821 | 1 | V-Belt, 81.8 Inch |
| 2 | 3219-7 | 1 | Nut-Hex |
| 3 | 119-8804 | 1 | Pulley-Deck |
| 4 | 119-0368 | 1 | Spindle Housing ASM |
| 4:4 | 251-297 | 2 | Bearing-Ball |
| 4:5 | 83-7020 | 1 | Spacer-Bearing |
| 5 | 119-8825 | 1 | Shaft-Spindle |
| 6 | 80-4430-03 | 1 | Blade-Recycler, 31.35 Inch |
| 7 | 80-4570-03 | 1 | Stiffener |
| 8 | 3290-465 | 1 | Washer-Belleville |
| 9 | 26-0671 | 1 | Screw-HH |
| 10 | 104-8301 | 2 | Nut-Flange, NI |
| 11 | 106-2175 | 1 | Pulley-Idler, Flat |
| 12 | 119-8966 | 1 | Arm-Idler |
| 13 | 323-11 | 1 | Screw-HH |
| 14 | 323-7 | 1 | Screw-HH |
| 15 | 120-2229 | 2 | Washer |
| 16 | 114-0463 | 2 | Washer-Friction, Composite |
| 17 | 115-4986 | 1 | Spacer |
| 18 | 80-6990 | 1 | Washer-Hardened |
| 19 | 106-2177 | 1 | Spring-Extension |
| 20 | 88-5970 | 1 | Hook-Return, Spring |
| 21 | 32144-41 | 8 | Screw-Taptite |
| 22 | 3256-24 | 2 | Washer-Flat |
| 23 | 107-7307 | 1 | Guide-Idler, Belt |

# Attachments and Accessories

## For 74650 TimeCutter ZS 3200S Riding Mower

| Product Name | Model/Part |
|---|---|
| Hourmeter Kit | 116-5461 |
| Oil-Synthetic, All Season | 117-0066 |
| Fuel Stabilizer (4oz) | 117-0089 |
| Fuel Stabilizer (16oz) | 117-0090 |
| Seat With Armrests-18in | 119-8830 |
| Jack Mount Kit | 126-5251 |
| Jack Kit | 127-6666 |
| Attachment Mount Kit | 131-3966 |
| Weight Kit | 131-7658 |
| Deluxe Seat Kit | 131-7699 |
| 10w30 4-cycle Engine Oil (32oz Bottle) | 38280 |
| Toro 4-cycle Sae 30 Oil (32oz Bottle) | 38903 |
| Storage Cover | 490-7516 |
| Foot Assist Deck Lift Kit, 2011 and After Zero-Turn-Radius Riding Mower | 79010 |
| Sunshade Kit | 79011 |
| Floor Mat Kit, 2011 and After Zero-Turn-Radius Riding Mower w/ 32in or 42in Cutting Unit | 79020 |
| Cargo Carrier | 79040 |
| Assist Handle and Step Kit | 79339 |
| 32in Bagger | 79387 |

**Notes:**

TORO®

Count on it.