Form No. 3390-360 Rev A

TORO®

Count on it.

Operator's Manual

Finger Deck

Versa-Vac

Model No. 07081—Serial No. 315000001 and Up

Register at www.Toro.com.
Original Instructions (EN)

CE

3390-360 A

This product complies with all relevant European directives. For details, please see the Declaration of Incorporation (DOI) at the back of this publication.

⚠ WARNING

CALIFORNIA
Proposition 65 Warning

This product contains a chemical or chemicals known to the State of California to cause cancer, birth defects, or reproductive harm.

Introduction

This finger deck works in conjunction with the VersaVac vacuum to pick up debris and loose materials from golf courses and other large areas of maintained grass.

Read this information carefully to learn how to operate and maintain your product properly and to avoid injury and product damage. You are responsible for operating the product properly and safely.

You may contact Toro directly at www.Toro.com for product and accessory information, help finding a dealer, or to register your product.

Whenever you need service, genuine Toro parts, or additional information, contact an Authorized Service Dealer or Toro Customer Service and have the model and serial numbers of your product ready. Write the numbers in the space provided:

Model No. _____

Serial No. _____

This manual identifies potential hazards and has safety messages identified by the safety alert symbol (Figure 1), which signals a hazard that may cause serious injury or death if you do not follow the recommended precautions.



Figure 1

1. Safety alert symbol

This manual uses 2 other words to highlight information. **Important** calls attention to special mechanical information and **Note** emphasizes general information worthy of special attention.

Contents

Safety 3
- Before Operating 3
- Operating 3
- Maintenance 3
- Safety and Instructional Decals 4

Setup 5
- Installing the Finger Deck 5

Product Overview 6
- Specifications 6
- Attachments/Accessories 6

Operation 7
- Checking the Tire Pressure 7
- Adjusting the Operating Height 7
- Operating Tips 7
- Cleaning the Machine 7

Maintenance 8
- Recommended Maintenance Schedule(s) 8
- Greasing the Machine 8
- Adjusting the Drive Belt 8
- Replacing the Finger Belts 9

© 2014—The Toro® Company

8111 Lyndale Avenue South
Bloomington, MN 55420

Contact us at www.Toro.com.
Printed in the USA.
All Rights Reserved

Safety

Hazard control and accident prevention are dependent upon the awareness, concern, and proper training of the personnel involved in the operation, transport, maintenance, and storage of the machine. Improper use or maintenance of the machine can result in injury or death. To reduce the potential for injury or death, comply with the following safety instructions.

Before Operating

- Read, understand, and follow all instructions in the traction unit and cutting unit operators manual's before operating the machine.
- Never allow children to operate the machine. Do not allow adults to operate machine without proper instruction. Only trained operators who have read this manual should operate this machine.
- Never operate the machine when under the influence of drugs or alcohol.
- Lightning can cause severe injury or death. If lightning is seen or thunder is heard in the area, do not operate the machine; seek shelter.
- Keep all bystanders away from the operating area.
- Keep all shields and safety devices in place. If a shield, safety device, or decal is illegible or damaged, repair or replace it before operation is commenced. Also tighten any loose nuts, bolts, and screws to ensure that the machine is in safe operating condition.
- Do not operate the machine while wearing sandals, tennis shoes, sneakers, or shorts. Also, do not wear loose fitting clothing which could get caught in moving parts. Always wear long pants and substantial shoes. Wearing safety glasses, safety shoes, and a helmet is advisable and required by some local ordinances and insurance regulations.

Operating

- This product may exceed noise levels of 85 dB(A) at the operator position. Hearing protection is recommended for prolonged exposure to reduce the potential of permanent hearing damage.
- Using the machine demands attention. To prevent loss of control:
  - Operate only in daylight or when there is good artificial light.
  - Drive slowly and watch for holes or other hidden hazards.
  - Reduce your speed when making sharp turns and when turning on hillsides.
  - Avoid sudden starts and stops.
  - Before backing up, look to the rear and ensure that no one is behind the machine.
  - Watch out for traffic when near or crossing roads. Always yield the right-of-way.
- The rubber fingers pick up and propel debris and small objects in its path during operation. Always wear eye and head protection to avoid possible injury from flying objects, and keep children, pets, and bystanders well away from the area of operation.
- Never carry passengers on the traction unit or Versa Vac.
- Do not step over PTO shaft to get to other side of machine. Walk around trailer.
- Never get on or off traction unit with PTO shaft engaged.
- Always stand to extreme right or left side of trailer when opening rear door.
- When a person or pet appears unexpectedly in or near the operating area, stop operation. Careless operation, combined with terrain angles, ricochets, or improperly positioned guards can lead to thrown object injuries. Do not resume operation until the area is cleared.

Maintenance

- Remove the key from the ignition switch to prevent accidental starting of the engine when servicing, adjusting, or storing the machine.
- Perform only those maintenance instructions described in this manual. If major repairs are ever needed or assistance is desired, contact an Authorized Toro Distributor.
- Be sure that the machine is in safe operating condition by keeping nuts, bolts, and screws tight. Check all bolts and nuts frequently to be sure that they are tightened to specification.
- To ensure optimum performance and safety, always purchase genuine Toro replacement parts and accessories to keep the machine all Toro. **Do not use "will-fit" replacement parts and accessories made by other manufacturers.** Look for the Toro logo to ensure genuineness. Using unapproved replacement parts and accessories could void the warranty.

Safety and Instructional Decals

Safety decals and instructions are easily visible to the operator and are located near any area of potential danger. Replace any decal that is damaged or lost.

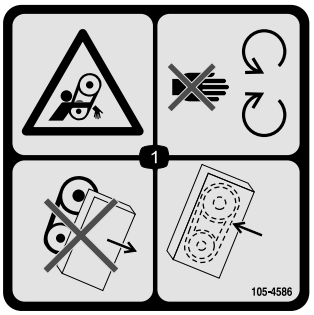

105-4586

1. Entanglement hazard, belt—stay away from moving parts. Do not operate the machine with the shields or guards removed; keep the shields and guards in place.

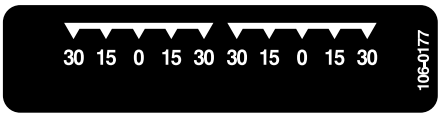

106-0177



106-0178

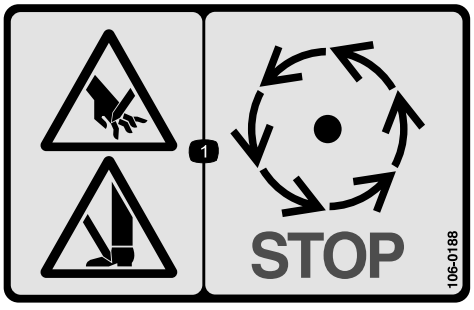

106-0188

1. Cutting hazard of hand or foot—wait for moving parts to stop.

Setup

Loose Parts

Use the chart below to verify that all parts have been shipped.

Description	Qty.	Use
No parts required	–	Install the finger deck.

Media and Additional Parts

Description	Qty.	Use
Parts Catalog	1	Use to reference part numbers
Operator's Manual	1	Review the manual and save in an appropriate place
Registration card	1	Fill out and return to Toro.

Note: Determine the left and right sides of the machine from the normal operating position.

Installing the Finger Deck

1. Roll the deck under the Versa Vac. Make sure hydraulic motor is on the left side.
2. Slide the tow arms onto the frame pins. Secure each tow arm to the frame pin with a washer and hair pin cotter (Figure 2).

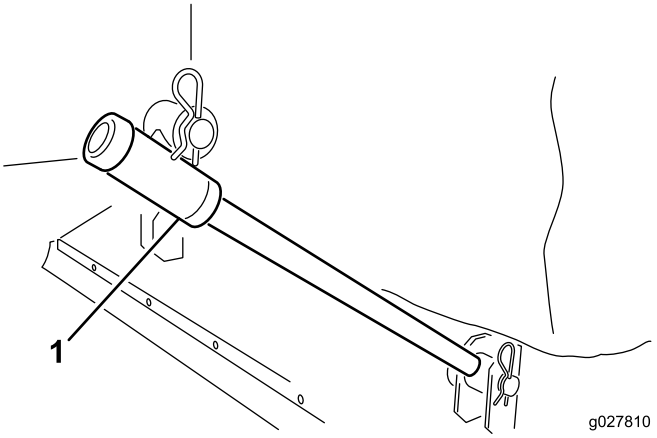

Figure 2

1. Tow arm

3. Connect each lift chain to the corresponding deck bracket with a clevis pin and hair pin cotter (Figure 3).

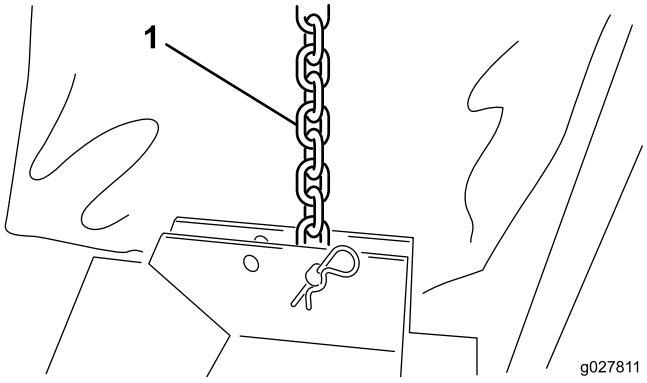

Figure 3

1. Lift chain

4. Install the canvas ring around the lip on the Versa Vac and deck openings (Figure 4).

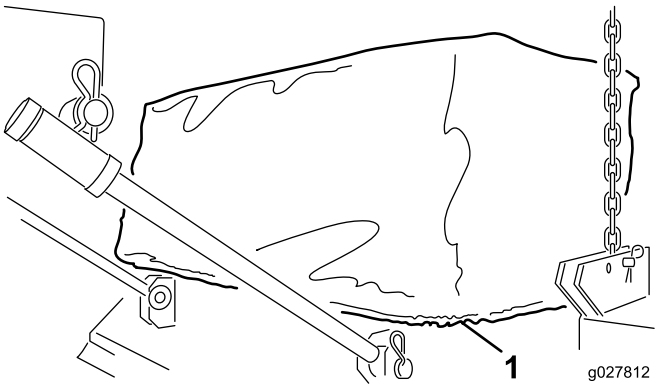

Figure 4

1. Canvas ring

5. Connect the hydraulic motor hose quick couplers to the Versa Vac couplers as shown in Figure 5.

Note: Verify that the fingers rotate. The fingers should rotate clockwise (as viewed from the motor end of the deck).

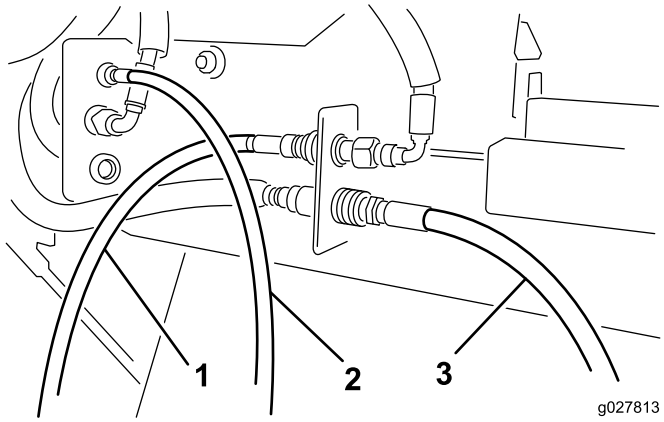

Figure 5

1. Motor hose—front
2. Motor hose—center
3. Motor hose—rear

Note: If the deck is not level when it is raised off the ground, reposition the lift chain in another mounting hole in the bracket.

Product Overview

Specifications

Width	193 to 203 cm (76 to 80 inches)
Operating Width	183 cm (72 inches)
Height	40.6 to 61 cm (16 to 24 inches)
Weight	117 to 140 Kg (258 to 308 lb)

Attachments/Accessories

A selection of Toro approved attachments and accessories is available for use with the machine to enhance and expand its capabilities. Contact your Authorized Service Dealer or Distributor or go to www.Toro.com for a list of all approved attachments and accessories.

Operation

Note: Determine the left and right sides of the machine from the normal operating position.

Checking the Tire Pressure

Service Interval: Before each use or daily

The correct tire pressure for the castor wheels is 30 psi.

Adjusting the Operating Height

1. Remove the clevis pin from the spindle shaft (Figure 6).

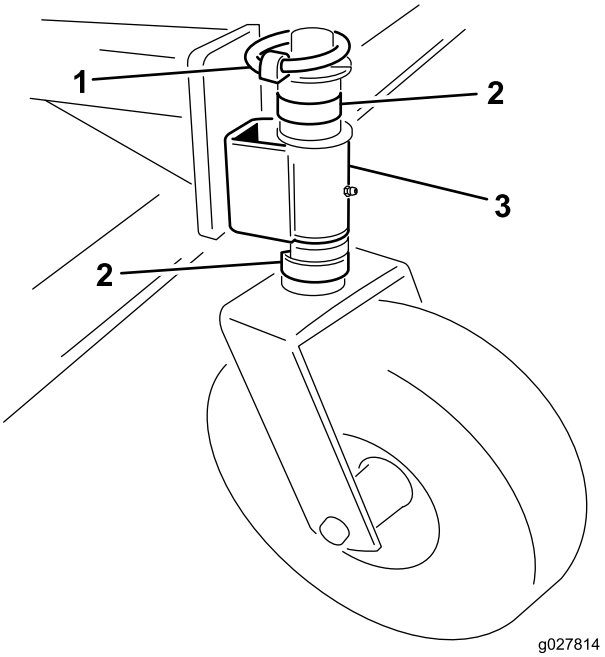

Figure 6

1. Clevis pin
2. Spacer
3. Castor arm

2. Remove or add C shaped spacers to the spindle shaft, below the castor arm, to get the desired height.
3. Place all remaining spacers on the spindle shaft above the caster arm.
4. Install the clevis pin to secure the assembly.
5. Ensure that all four castor wheels are set at the same height.

Operating Tips

For complete operating instructions, refer to the *Operator's Manual* that came with the Versa Vac.

- Before starting to sweep, survey the area to determine the best direction to sweep.
- To maintain a straight line when sweeping, sight off of an object in the foreground.
- Always try to make a long, continuous run with a slight overlap on the return run.
- On turf areas, the deck will pick up twigs, clippings, leaves, pine needles, pine cones, and small debris.

Important: Do not make sharp turns when using the machine as damage to turf may occur.

Important: Do not operate the machine while the rotor is turning and in the raised position.

Cleaning the Machine

Service Interval: After each use

After each use, thoroughly clean and wash the machine. After cleaning, inspected the machine for possible damage to mechanical components.

Maintenance

Recommended Maintenance Schedule(s)

Maintenance Service Interval	Maintenance Procedure
After the first 20 hours	• Check and adjust the drive belt.
Before each use or daily	• Check the tire pressure.
After each use	• Clean the machine. • Grease the machine.

Greasing the Machine

Service Interval: After each use

The deck has 10 grease fittings that must be lubricated regularly with No. 2 General Purpose Lithium Base Grease.

The grease fitting locations and quantities are as follows:

- Caster wheel (2 each) (Figure 7)
- Finger rotor bearings (2) (Figure 8)

Important: Lubricating the machine immediately after washing helps purge water out of the bearings and increases bearing life.

1. Wipe each grease fitting with a clean rag.
2. Apply grease until clean grease is seen coming out of the bearing seals.
3. Wipe excess grease away.

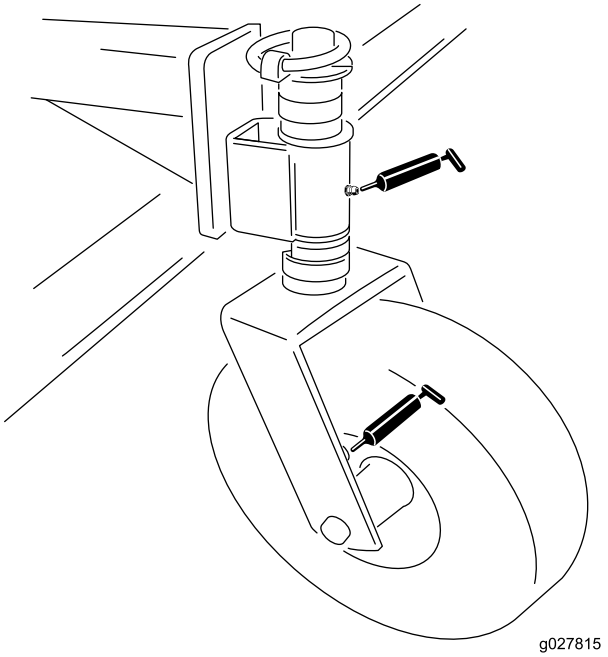

Figure 7

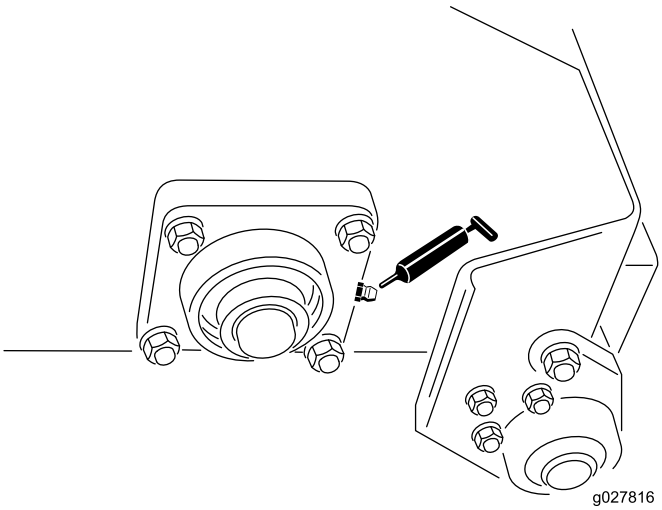

Figure 8

Adjusting the Drive Belt

Service Interval: After the first 20 hours—Check and adjust the drive belt.

Make sure belt is properly tensioned to ensure proper operation of the machine and unnecessary wear. If the belt squeals or slips, tighten it as follows:

1. Remove the fasteners securing the motor shield to the deck frame (Figure 9). Remove the shield.

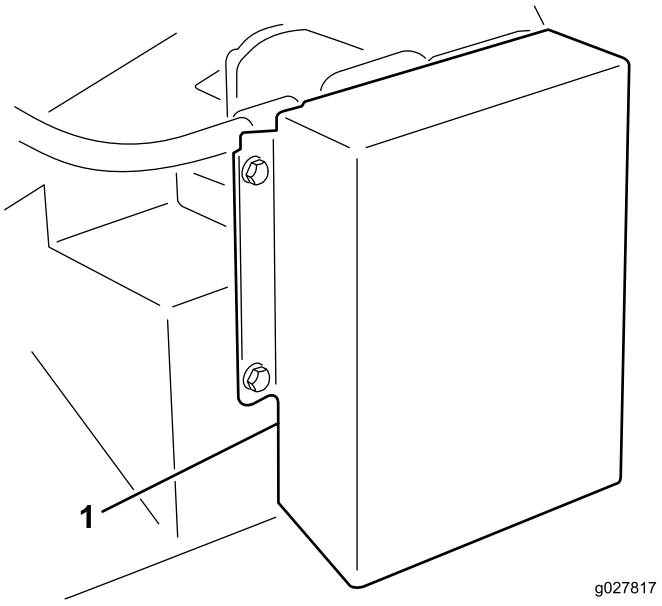

Figure 9

1. Drive shield

2. On back side of the frame, loosen the bolt securing the belt tensioner to the frame (Fig. 9).

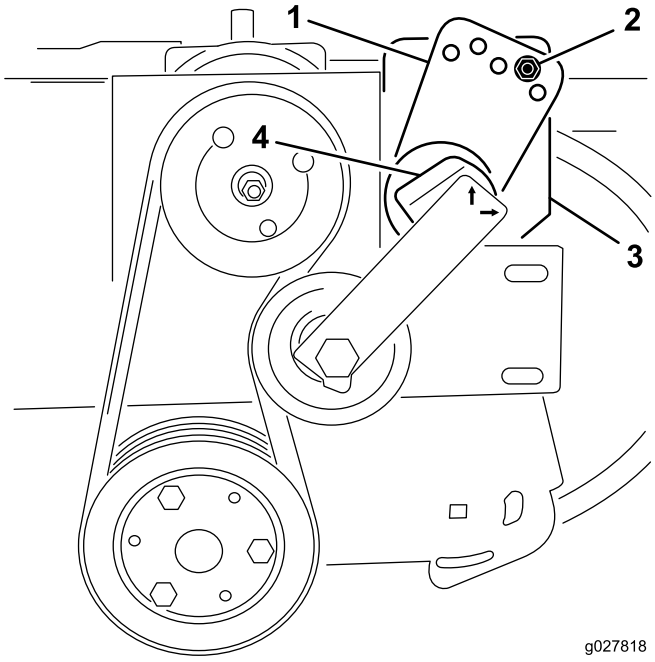

Figure 10

1. Tensioner guide
2. Bolt and nut
3. Bolt (back of frame)
4. Tensioner

3. Remove the bolt and nut securing the tensioner guide to the drive mount (Fig. 9). Belt tension will be released when the bolt is removed.
4. Position a large wrench on the tensioner. Rotate the tensioner clockwise until the decal is aligned with 15 on the tensioner tube.
5. Insert the bolt into the aligned guide holes and secure it with the nut. If holes are not exactly aligned, rotate the guide to the next higher hole until aligned.
6. Tighten the bolt on the back side of the frame to lock the tensioner.
7. Install the motor shield.

Replacing the Finger Belts

1. Loosen the nuts and washers securing the finger pinchers to rotor (Figure 11 and Figure 12).
2. Remove the old belt fingers.
3. Install new belt fingers (Figure 11 and Figure 12). Belt fingers extend from finger pinchers approximately 10 cm (4 inches).
4. Tighten the nuts securing the fingers.

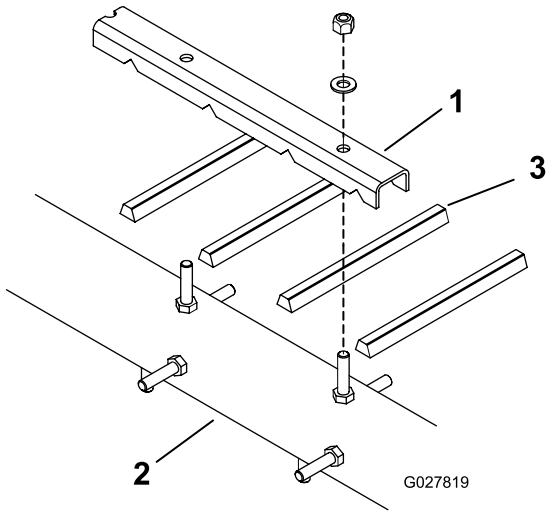

Figure 11

1. Finger pincher
2. Rotor
3. Belt finger

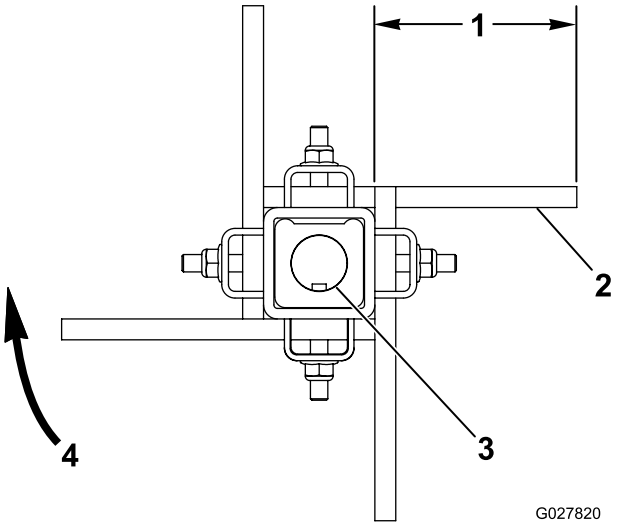

Figure 12

1. Approximately 10 cm (4 inches)
2. Flat side of the belt
3. Keyed shaft
4. Brush rotation

Declaration of Incorporation

The Toro Company, 8111 Lyndale Avenue South, Bloomington, MN, USA declares that the following unit(s) conform(s) to the directives listed, when installed in accordance with the accompanying instructions onto certain Toro models as indicated on the relevant Declarations of Conformity.

Model No.	Serial No.	Product Description	Invoice Description	General Description	Directive
07081	315000001 and Up	Finger Deck	RUBBER FINGER DECK	Vacuum Deck Attachment	2006/42/EC

Relevant technical documentation has been compiled as required per Part B of Annex VII of 2006/42/EC.

We will undertake to transmit, in response to requests by national authorities, relevant information on this partly completed machinery. The method of transmission shall be electronic transmittal.

This machinery shall not be put into service until incorporated into approved Toro models as indicated on the associated Declaration of Conformity and in accordance with all instructions, whereby it can be declared in conformity with all relevant Directives.

Certified:



David Klis
Sr. Engineering Manager
8111 Lyndale Ave. South
Bloomington, MN 55420, USA
November 18, 2014

EU Technical Contact:

Peter Tetteroo
Toro Europe NV
B-2260 Oevel-Westerloo
Belgium

Tel. 0032 14 562960
Fax 0032 14 581911

Toro General Commercial Product Warranty

A Two-Year Limited Warranty

Conditions and Products Covered

The Toro Company and its affiliate, Toro Warranty Company, pursuant to an agreement between them, jointly warrant your Toro Commercial product ("Product") to be free from defects in materials or workmanship for two years or 1500 operational hours*, whichever occurs first. This warranty is applicable to all products with the exception of Aerators (refer to separate warranty statements for these products). Where a warrantable condition exists, we will repair the Product at no cost to you including diagnostics, labor, parts, and transportation. This warranty begins on the date the Product is delivered to the original retail purchaser.
* Product equipped with an hour meter.

Instructions for Obtaining Warranty Service

You are responsible for notifying the Commercial Products Distributor or Authorized Commercial Products Dealer from whom you purchased the Product as soon as you believe a warrantable condition exists. If you need help locating a Commercial Products Distributor or Authorized Dealer, or if you have questions regarding your warranty rights or responsibilities, you may contact us at:

Toro Commercial Products Service Department
Toro Warranty Company
8111 Lyndale Avenue South
Bloomington, MN 55420-1196

952–888–8801 or 800–952–2740
E-mail: commercial.warranty@toro.com

Owner Responsibilities

As the Product owner, you are responsible for required maintenance and adjustments stated in your *Operator's Manual*. Failure to perform required maintenance and adjustments can be grounds for disallowing a warranty claim.

Items and Conditions Not Covered

Not all product failures or malfunctions that occur during the warranty period are defects in materials or workmanship. This warranty does not cover the following:

- Product failures which result from the use of non-Toro replacement parts, or from installation and use of add-on, or modified non-Toro branded accessories and products. A separate warranty may be provided by the manufacturer of these items.
- Product failures which result from failure to perform recommended maintenance and/or adjustments. Failure to properly maintain your Toro product per the Recommended Maintenance listed in the *Operator's Manual* can result in claims for warranty being denied.
- Product failures which result from operating the Product in an abusive, negligent, or reckless manner.
- Parts subject to consumption through use unless found to be defective. Examples of parts which are consumed, or used up, during normal Product operation include, but are not limited to, brake pads and linings, clutch linings, blades, reels, rollers and bearings (sealed or greasable), bed knives, spark plugs, castor wheels and bearings, tires, filters, belts, and certain sprayer components such as diaphragms, nozzles, and check valves, etc.
- Failures caused by outside influence. Conditions considered to be outside influence include, but are not limited to, weather, storage practices, contamination, use of unapproved fuels, coolants, lubricants, additives, fertilizers, water, or chemicals, etc.
- Failure or performance issues due to the use of fuels (e.g. gasoline, diesel, or biodiesel) that do not conform to their respective industry standards.
- Normal noise, vibration, wear and tear, and deterioration.
- Normal "wear and tear" includes, but is not limited to, damage to seats due to wear or abrasion, worn painted surfaces, scratched decals or windows, etc.

Parts

Parts scheduled for replacement as required maintenance are warranted for the period of time up to the scheduled replacement time for that part. Parts replaced under this warranty are covered for the duration of the original product warranty and become the property of Toro. Toro will make the final decision whether to repair any existing part or assembly or replace it. Toro may use remanufactured parts for warranty repairs.

Deep Cycle and Lithium-Ion Battery Warranty:

Deep cycle and Lithium-Ion batteries have a specified total number of kilowatt-hours they can deliver during their lifetime. Operating, recharging, and maintenance techniques can extend or reduce total battery life. As the batteries in this product are consumed, the amount of useful work between charging intervals will slowly decrease until the battery is completely worn out. Replacement of worn out batteries, due to normal consumption, is the responsibility of the product owner. Battery replacement may be required during the normal product warranty period at owner's expense. Note: (Lithium-Ion battery only): A Lithium-Ion battery has a part only prorated warranty beginning year 3 through year 5 based on the time in service and kilowatt hours used. Refer to the *Operator's Manual* for additional information.

Maintenance is at Owner's Expense

Engine tune-up, lubrication, cleaning and polishing, replacement of filters, coolant, and completing recommended maintenance are some of the normal services Toro products require that are at the owner's expense.

General Conditions

Repair by an Authorized Toro Distributor or Dealer is your sole remedy under this warranty.

Neither The Toro Company nor Toro Warranty Company is liable for indirect, incidental or consequential damages in connection with the use of the Toro Products covered by this warranty, including any cost or expense of providing substitute equipment or service during reasonable periods of malfunction or non-use pending completion of repairs under this warranty. Except for the Emissions warranty referenced below, if applicable, there is no other express warranty. All implied warranties of merchantability and fitness for use are limited to the duration of this express warranty.

Some states do not allow exclusions of incidental or consequential damages, or limitations on how long an implied warranty lasts, so the above exclusions and limitations may not apply to you. This warranty gives you specific legal rights, and you may also have other rights which vary from state to state.

Note regarding engine warranty:

The Emissions Control System on your Product may be covered by a separate warranty meeting requirements established by the U.S. Environmental Protection Agency (EPA) and/or the California Air Resources Board (CARB). The hour limitations set forth above do not apply to the Emissions Control System Warranty. Refer to the Engine Emission Control Warranty Statement supplied with your product or contained in the engine manufacturer's documentation for details

Countries Other than the United States or Canada

Customers who have purchased Toro products exported from the United States or Canada should contact their Toro Distributor (Dealer) to obtain guarantee policies for your country, province, or state. If for any reason you are dissatisfied with your Distributor's service or have difficulty obtaining guarantee information, contact the Toro importer.

374-0253 Rev C