Form No. 3390-401 Rev A

TORO®

Count on it.

Operator's Manual

GrandStand® Mower

With 36in or 40in TURBO FORCE® Cutting Unit

Model No. 74534—Serial No. 314000001 and Up
Model No. 74536—Serial No. 314000001 and Up
Model No. 79534—Serial No. 314000001 and Up

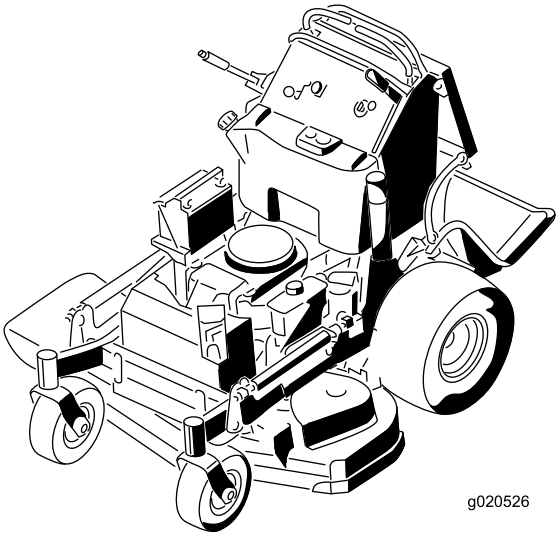

g020526

Register at www.Toro.com.
Original Instructions (EN)

3390-401 A

⚠ WARNING

CALIFORNIA
Proposition 65 Warning

This product contains a chemical or chemicals known to the State of California to cause cancer, birth defects, or reproductive harm.

The engine exhaust from this product contains chemicals known to the State of California to cause cancer, birth defects, or other reproductive harm.

This spark ignition system complies with Canadian ICES-002.

Important: This engine is not equipped with a spark arrester muffler. It is a violation of California Public Resource Code Section 4442 to use or operate the engine on any forest-covered, brush-covered, or grass-covered land. Other states or federal areas may have similar laws.

The enclosed *Engine Owner's Manual* is supplied for information regarding the US Environmental Protection Agency (EPA) and the California Emission Control Regulation of emission systems, maintenance, and warranty. Replacements may be ordered through the engine manufacturer.

Introduction

This rotary-blade, riding lawn mower is intended to be used by residential homeowners or professional, hired operators. It is designed primarily for cutting grass on well-maintained lawns on residential or commercial properties. It is not designed for cutting brush or for agricultural uses.

Read this information carefully to learn how to operate and maintain your product properly and to avoid injury and product damage. You are responsible for operating the product properly and safely.

You may contact Toro directly at www.Toro.com for product and accessory information, help finding a dealer, or to register your product.

Whenever you need service, genuine Toro parts, or additional information, contact an Authorized Service Dealer or Toro Customer Service and have the model and serial numbers of your product ready. Figure 1 identifies the location of the model and serial numbers on the product. Write the numbers in the space provided.

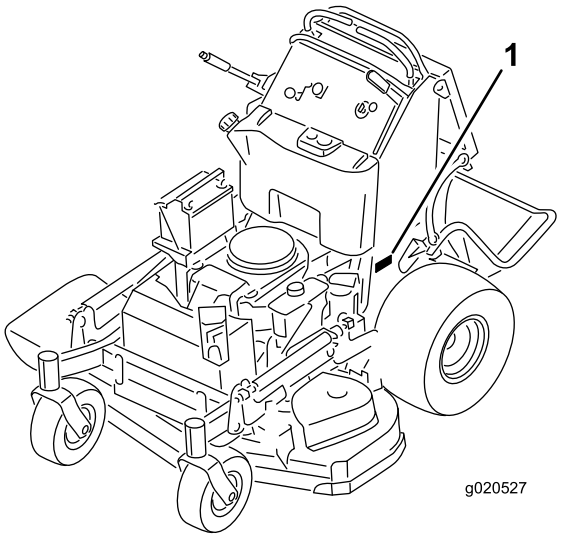

Figure 1

1. Location of the model and serial numbers

Model No. _____

Serial No. _____

This manual identifies potential hazards and has safety messages identified by the following words:

- **Danger** signals an extreme hazard that **will** cause serious injury or death if you do not follow the recommended precautions.
- **Warning** signals a hazard that **may** cause serious injury or death if you do not follow the recommended precautions.
- **Caution** signals a hazard that may cause minor or moderate injury if you do not follow the recommended precautions.

This manual uses 2 words to highlight information. **Important** calls attention to special mechanical information and **Note** emphasizes general information worthy of special attention.

© 2014—The Toro® Company
8111 Lyndale Avenue South
Bloomington, MN 55420

Contact us at www.Toro.com.
Printed in the USA.
All Rights Reserved

Contents

Safety 4
Safe Operating Practices 4
Toro Mower Safety 6
Slope Indicator 7
Safety and Instructional Decals 8
Product Overview 12
Controls 12
Specifications 13
Operation 14
Adding Fuel 14
Checking the Engine-Oil Level 15
Breaking in a New Machine 15
Think Safety First 15
Operating the Parking Brake 15
Operating the Mower-Blade-Control Switch (PTO) 16
Operating the Throttle 16
Operating the Choke 16
Operating the Ignition Switch 17
Using the Fuel-Shutoff Valve 17
Starting and Stopping the Engine 17
Using the Safety-Interlock System 19
Operating the Platform 20
Driving Forward or Backward 20
Stopping the Machine 22
Pushing the Machine by Hand 22
Transporting the Machine 22
Loading Machines 23
Side Discharging or Mulching the Grass 24
Adjusting the Height-of-Cut 24
Adjusting the Flow Baffle 24
Positioning the Flow Baffle 25
Using Counterweights 26
Maintenance 27
Recommended Maintenance Schedule(s) 27
Premaintenance Procedures 28
Raising the Mower for Access 28
Releasing the Cushion for Rear Access 29
Lubrication 30
Lubricating the Machine 30
Greasing the Front Caster Pivots 30
Lubricating the Caster-Wheel Hubs 31
Engine Maintenance 32
Servicing the Air Cleaner 32
Servicing the Engine Oil 32
Servicing the Spark Plug 35
Checking the Spark Arrester (if equipped) 36
Fuel System Maintenance 37
Draining the Fuel Tank 37
Servicing the Fuel Filter 37
Electrical System Maintenance 38
Servicing the Battery 38
Servicing the Fuses 39
Drive System Maintenance 40
Adjusting the Tracking 40
Checking the Tire Pressure 41
Adjusting the Caster-Pivot Bearing 41
Adjusting the Electric Clutch 42
Cooling System Maintenance 43
Cleaning the Air-Intake Screen 43
Cleaning the Cooling System 43
Brake Maintenance 43
Servicing the Brake 43
Belt Maintenance 44
Checking the Belts 44
Replacing the Mower-Deck Belt for 36-inch Mowers 44
Replacing the Mower-Deck Belts for 40-inch Mowers 45
Replacing the Pump-Drive Belt 46
Controls System Maintenance 47
Adjusting the Motion-Control-Handle Positions 47
Hydraulic System Maintenance 49
Servicing the Hydraulic System 49
Mower Deck Maintenance 52
Servicing the Cutting Blades 52
Leveling the Mower Deck 53
Replacing the Grass Deflector 58
Cleaning 58
Cleaning under the Mower 58
Disposing of Waste 58
Storage 59
Cleaning and Storage 59
Troubleshooting 60
Schematics 62

Safety

Improper use or maintenance by the operator or owner can result in injury. To reduce the potential for injury, comply with these safety instructions, and pay attention to the safety alert symbol , which means **Caution, Warning,** or **Danger**—"personal safety instruction." **Failure to comply with the instructions may result in personal injury or death.**

Important: This machine was manufactured according to the appropriate regulatory standards in effect at the time of manufacture. Modifying this machine in any way may cause it to be out of compliance with those standards and with the instructions in this Operator's Manual. Modifications to this machine should only be made by either the manufacturer or an Authorized Toro Dealer.

This product is capable of amputating hands and feet. Follow all safety instructions to avoid serious injury or death.

The owner/user can prevent and is responsible for accidents or injuries occurring to people, or damage to property.

Important: The addition of attachments made by other manufacturers that do not meet American National Standards Institute certification will cause noncompliance of this machine.

Safe Operating Practices

The following instructions are adapted from ANSI standard B71.4-2012.

Training

- Read the *Operator's Manual* and other training material.

  Note: If the operator(s) or mechanic(s) cannot read the manual language, it is the owner's responsibility to explain this material to them.
- Become familiar with the safe operation of the equipment, operator controls, and safety signs.
- All operators and mechanics should be trained. The owner is responsible for training the users.
- Never let children or untrained people operate or service the equipment. Local regulations may restrict the age of the operator.
- The owner/user can prevent and is responsible for accidents or injuries occurring to people, or damage to property.

Preparation

- Evaluate the terrain to determine what accessories and attachments are needed to properly and safely perform the job.

  Note: Only use accessories and attachments approved by the manufacturer.
- Wear appropriate clothing including: a hard hat, safety glasses, and hearing protection. Long hair, loose clothing or jewelry may get tangled in moving parts.
- Inspect the area where the equipment is used, and remove all objects that can be thrown by the machine.
- Check that operator's presence controls, safety switches and shields are attached and functioning properly. Do not operate unless they are functioning properly.

Operation

- Lightning can cause severe injury or death. If lightning is seen, or thunder is heard in the area, do not operate the machine; seek shelter.
- Do not run an engine in an enclosed area.
- Only operate in well-lit areas, keeping away from holes and hidden hazards.
- Ensure that all drives are in neutral and that the parking brake is engaged before starting engine. Only start the engine from the operator's position.
- Make sure that you have good footing while using this machine, especially when backing up.

  Note: Reduced footing could cause slipping.
- Slow down and use extra care on hillsides. Be sure to travel side to side on hillsides. Turf conditions can affect the stability of the machine. Use caution while operating near drop-offs.
- Slow down and use caution when making turns and when changing directions on slopes.
- Do not raise the mower deck with the blades running.
- Do not operate the machine without the PTO shield or other guards securely in place. Be sure all interlocks are attached, adjusted properly, and functioning properly.
- Do not operate with the discharge deflector raised, removed or altered, unless using a grass catcher.
- Do not change the engine governor setting or overspeed the engine.
- Stop on level ground, disengage drives, engage the parking brake (if provided), shut off the engine before leaving the operator's position for any reason, including emptying the catchers or unclogging the chute.
- Stop equipment and inspect the blades after striking objects or if an abnormal vibration occurs. Make the necessary repairs before resuming operations.
- Keep your hands and feet away from the cutting unit.
- Look behind and down before backing up to ensure a clear path.

- Keep pets and bystanders away from an operating machine.
- Slow down and use caution when making turns and crossing roads and sidewalks. Stop the blades if you are not mowing.
- Be aware of the mower-discharge direction and do not point it at anyone.
- Do not operate the mower under the influence of alcohol or drugs.
- Use care when loading or unloading the machine into or from a trailer or truck.
- Use care when approaching blind corners, shrubs, trees, or other objects that may obscure vision.

Safe Handling of Fuels

- To avoid personal injury or property damage, use extreme care in handling gasoline. Gasoline is extremely flammable and the vapors are explosive.
- Extinguish all cigarettes, cigars, pipes, and other sources of ignition.
- Use only an approved fuel container.
- Do not remove the fuel cap or add fuel with the engine running.
- Allow the engine to cool before fueling.
- Do not refuel the machine indoors.
- Do not store the machine or fuel container where there is an open flame, spark, or pilot light such as on a water heater or on other appliances.
- Do not fill containers inside a vehicle, on a truck, or on a trailer bed with a plastic liner. Always place containers on the ground away from your vehicle before filling.
- Remove equipment from the truck or trailer and fuel it on the ground. If this is not possible, then add fuel with such equipment as a portable container, rather than from a fuel dispenser nozzle.
- Keep the nozzle in contact with the rim of the fuel tank or container opening at all times until fueling is complete.
- Do not use a nozzle lock open device.
- If fuel is spilled on clothing, change your clothing immediately.
- Do not overfill fuel tank. Replace fuel cap and tighten securely.

Maintenance and Storage

- Disengage drives, set the parking brake, stop the engine, and remove the key or disconnect spark-plug wire. Wait for all movement to stop before adjusting, cleaning, or repairing.
- Park the machine on a level surface.
- Clean grass and debris from the cutting unit, drives, muffler, and engine to help prevent fires.
- Clean up oil or fuel spillage.
- Let the engine cool before storing.
- Do not store fuel near flames or drain indoors.
- Do not allow untrained personnel to service machine.
- Use jack stands to support components when required.
- Carefully release pressure from components with stored energy.
- Disconnect the battery or remove the spark-plug wire before making any repairs. Disconnect the negative terminal first and the positive terminal last. Reconnect the positive first and negative last.
- Use care when checking the blades. Wrap the blade(s) or wear gloves, and use caution when servicing them. Only replace blades; do not straighten or weld them.
- Keep hands and feet away from moving parts. If possible, do not make adjustments with the engine running.
- Keep all parts in good working condition and all hardware tightened. Replace all worn or damaged decals.

Hauling

- Use care when loading or unloading the machine into a trailer or a truck.
- When loading or unloading the machine, use one full-width ramp that is wide enough to extend beyond the width of the machine.

  Tie the machine down securely using straps, chains, cable, or ropes. Both front and rear straps should be directed down and outward from the machine.

Toro Mower Safety

The following list contains safety information specific to Toro products and other safety information you must know.

This product is capable of amputating hands and feet, and throwing objects. Always follow all safety instructions to avoid serious injury or death.

This product is designed for cutting and recycling grass, or, when equipped with a grass bagger, for catching cut grass. Any use for purposes other than these could prove dangerous to the user and bystanders.

General Operation

- Be sure that the area is clear of bystanders before mowing. Stop the machine if anyone enters the area.
- Do not touch equipment or attachment parts which may be hot from operation. Allow all of the parts to cool before attempting to maintain, adjust, or service the machine.
- Use only Toro-approved attachments. Warranty may be voided if used with any unapproved attachments.
- Check carefully for overhead clearances (i.e. branches, doorways, electrical wires, etc.) before operating under any objects, and do not contact them.
- Slow down before making turns and use extra caution.
- Use caution when riding the platform over curbs, rocks, roots, or other obstructions.
- Look behind and down before backing up to ensure a clear path. Use extra care when operating in reverse.
- Do not jerk the controls; use a steady motion.
- When loading or unloading the machine, use one full-width ramp that is wide enough to extend beyond the width of the machine.
- Do not carry passengers.
- Do not carry equipment on the machine.

Slope Operation

All slopes and ramps require extra caution. If you feel uneasy on a slope, do not mow it.

- Remove obstacles such as rocks, tree limbs, etc. from the mowing area.
- Watch for holes, ruts or bumps.

  Note: Tall grass can hide obstacles.
- Use caution near drop-offs, ditches, or embankments.

  Note: The machine could suddenly turn over if a wheel goes over the edge of a cliff or ditch, or if an edge caves in.
- Use extra care with grass catchers or other attachments.

  Note: These can change the stability of the machine.
- Keep all movement on slopes slow and gradual.
- Do not make sudden changes in speed or direction.
- Mow slopes side to side.
- Do not mow slopes greater than 20 degrees.

Service

- Do not store the machine or a fuel container inside where there is an open flame, such as near a water heater or furnace.
- Keep the nuts and bolts tight, especially the blade-attachment bolts.
- Never interfere with the intended function of a safety device or reduce the protection provided by a safety device. Check their proper operation regularly.
- To best protect your investment and maintain optimal performance of your Toro equipment, count on Toro genuine parts. When it comes to reliability, Toro delivers replacement parts designed to the exact engineering specifications of our equipment. For peace of mind, insist on Toro genuine parts.
- Check brake operation frequently. Adjust and service as required.

Slope Indicator

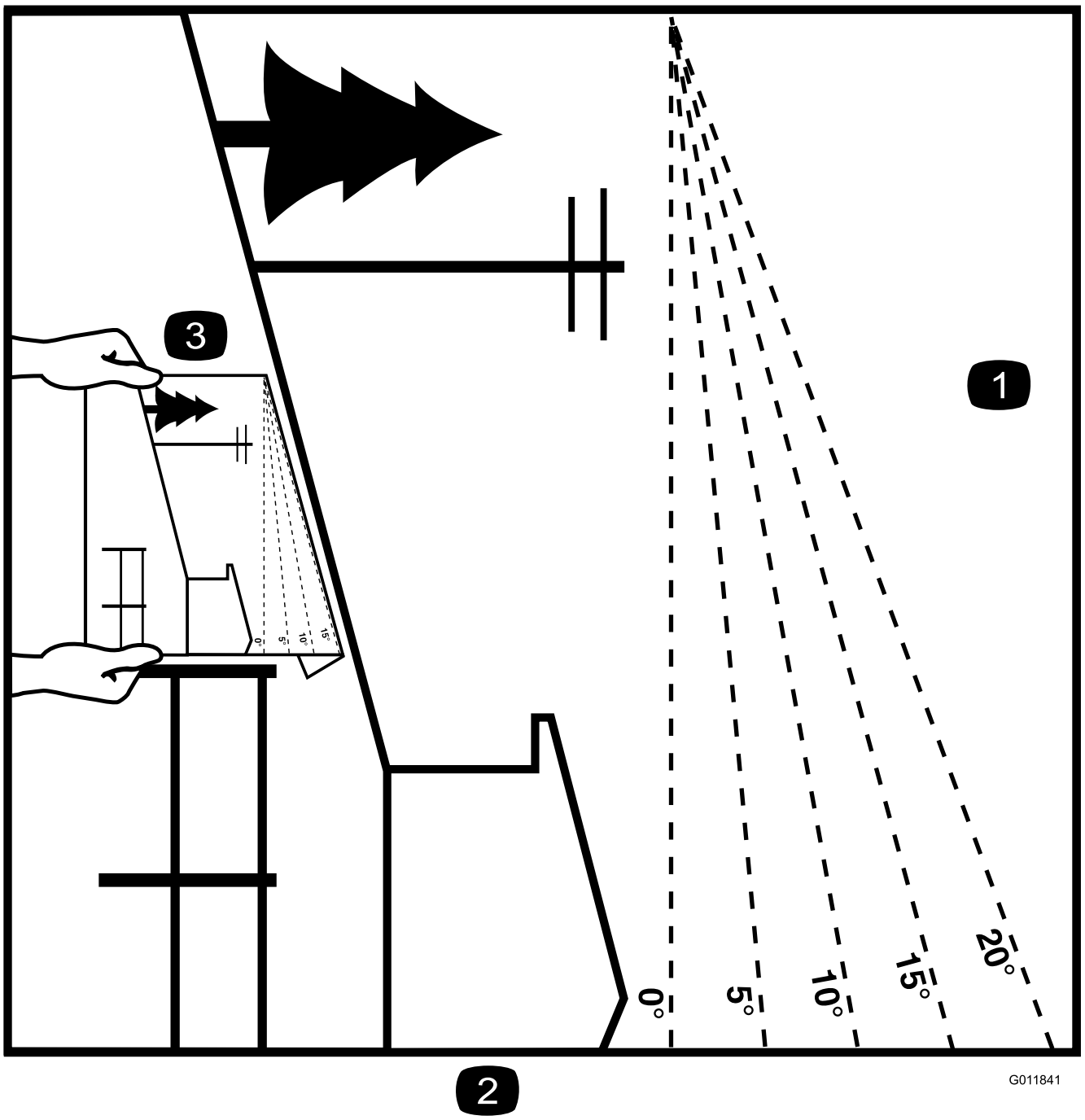

Figure 2

This page may be copied for personal use.

1. The maximum slope you can safely operate the machine on is **20 degrees**. Use the slope chart to determine the degree of slope of hills before operating. **Do not operate this machine on a slope greater than 20 degrees.** Fold along the appropriate line to match the recommended slope.
2. Align this edge with a vertical surface, a tree, building, fence pole, etc.
3. Example of how to compare slope with folded edge.

Safety and Instructional Decals

Safety decals and instructions are easily visible to the operator and are located near any area of potential danger. Replace any decal that is damaged or lost.

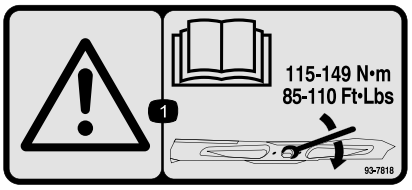

93-7818

1. Warning—read the *Operator's Manual* for instructions on torquing the blade bolt/nut to 115 to 149 N-m (85 to 110 ft-lb).



Battery Symbols

Some or all of these symbols are on your battery

1. Explosion hazard
2. No fire, open flame, or smoking.
3. Caustic liquid/chemical burn hazard
4. Wear eye protection
5. Read the *Operator's Manual.*
6. Keep bystanders a safe distance from the battery.
7. Wear eye protection; explosive gases can cause blindness and other injuries
8. Battery acid can cause blindness or severe burns.
9. Flush eyes immediately with water and get medical help fast.
10. Contains lead; do not discard.

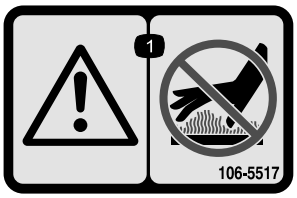

106-5517

1. Warning—do not touch the hot surface.

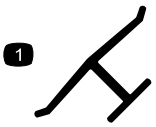

Manufacturer's Mark

1. Indicates the blade is identified as a part from the original machine manufacturer.

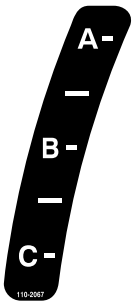

110-2067

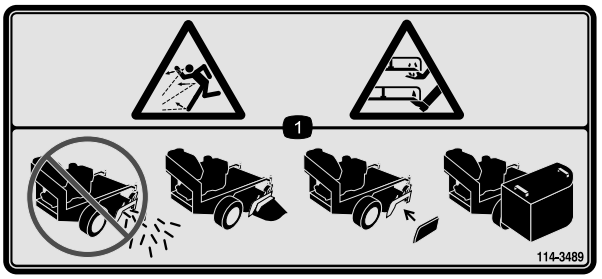

114-3489

1. Thrown object hazard; cutting/dismemberment hazard—do not operate the machine with the discharge opening uncovered; always operate the machine with the rear discharge deflector, discharge cover or grass collector installed.

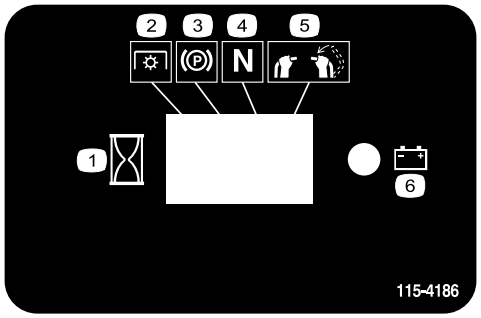

115-4186

1. Interval
2. Power Take-off (PTO)
3. Parking brake
4. Neutral
5. Operator presence switch
6. Battery



115-4212

1. Hydraulic oil level
2. Read the *Operator's Manual*.
3. Warning—do not touch the hot surface.

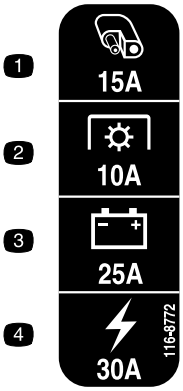

116-8772

1. Accessory, 15A
2. PTO, 10A
3. Charge, 25A
4. Main, 30A

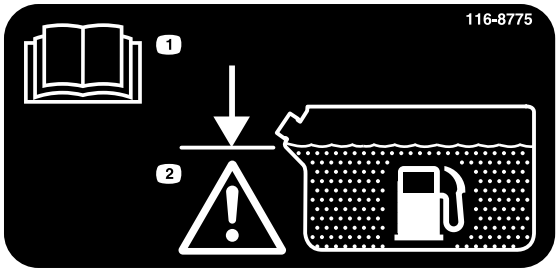

116-8775

1. Read the *Operator's Manual*
2. Fill to bottom of filler neck; warning—Do not overfill the tank

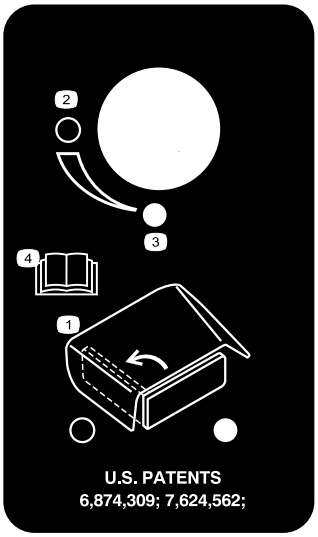

117-8569

1. Operator discharge control
2. Open
3. Closed
4. Read the *Operator's Manual.*



119-0185

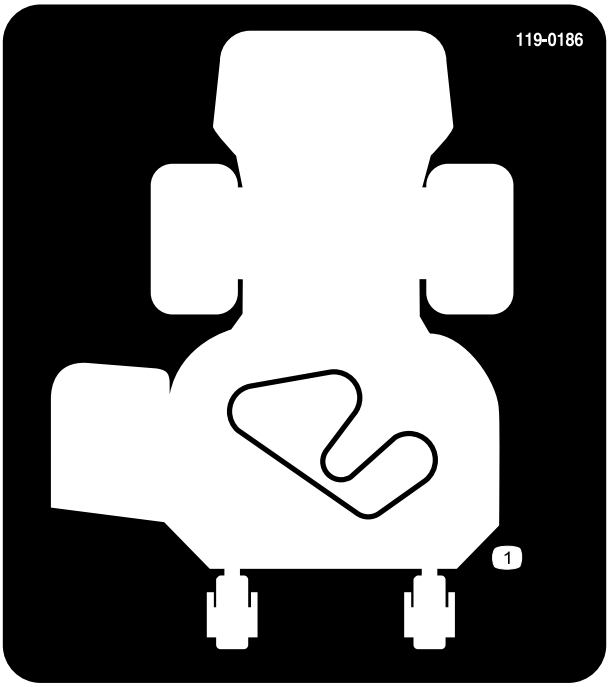

119-0186

36-inch Mower Deck

1. Belt routing

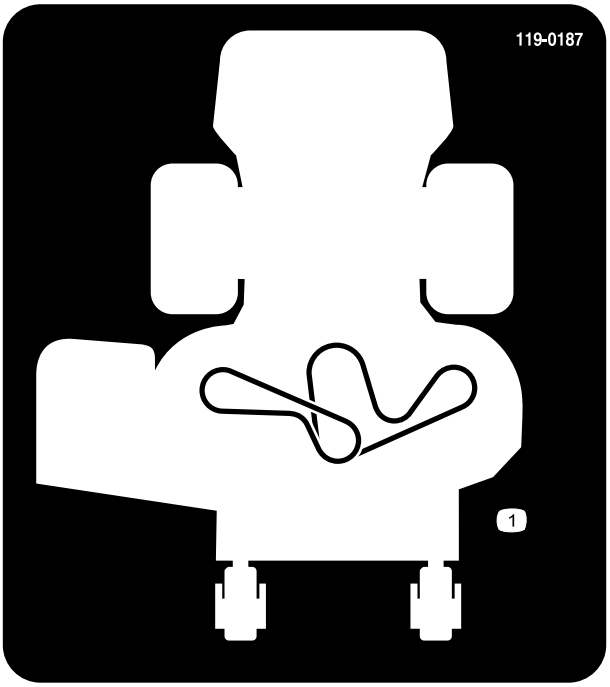

119-0187

40-inch Mower Deck

1. Belt routing

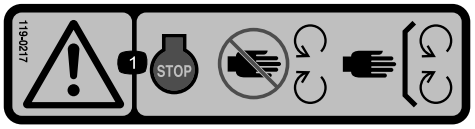

119-0217

1. Warning—stop the engine; stay away from moving parts; keep all guards and shields in place.

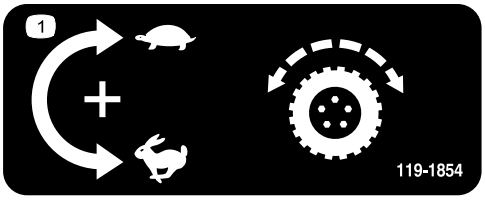

119-1854

1. Adjustment knob for traction drive speed.

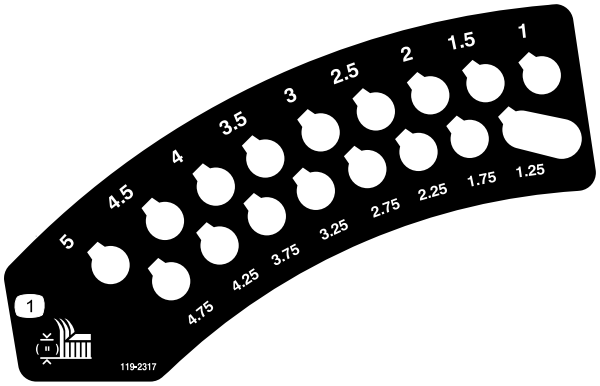

119-2317

1. Height-of-cut (inches)

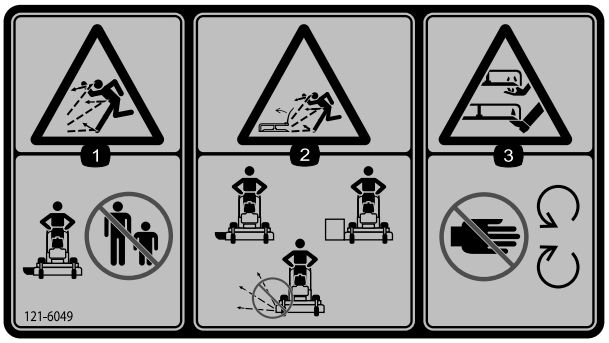

121-6049

1. Thrown object hazard—keep bystanders away from the machine.
2. Thrown object hazard, mower—do not operate the mower with guards or shields removed.
3. Cutting/dismemberment hazard of hand or foot, mower blade—keep hands away from moving parts.

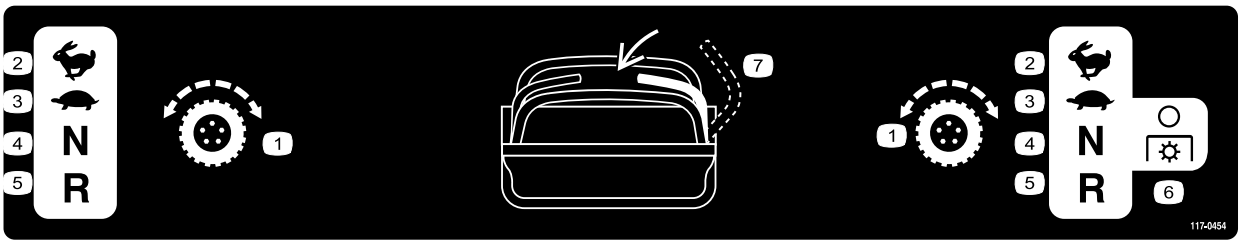

117-0454

1. Traction control
2. Fast
3. Slow
4. Neutral
5. Reverse
6. Power Take-off (PTO)—disengage
7. Operator presence switch

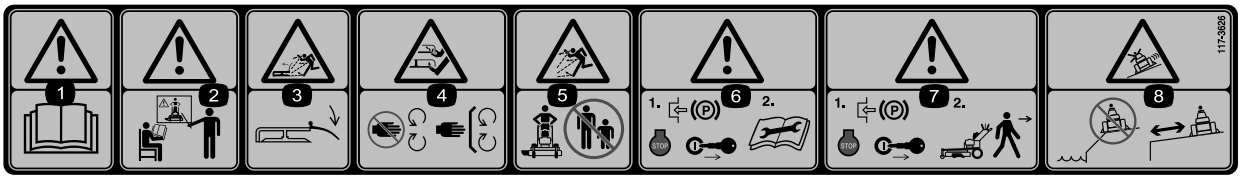

117-3626

1. Warning—read the *Operator's Manual.*
2. Warning—do not operate this machine unless you are trained.
3. Thrown object hazard—keep deflector in place.
4. Cutting, dismemberment hazard of hand or foot—stay away from moving parts and keep all guards and shields in place.
5. Thrown object hazard—keep bystanders a safe distance from the machine.
6. Warning—engage the parking brake, stop the engine and remove the spark plug wire before performing any maintenance on the machine.
7. Warning—engage the parking brake and stop the engine before leaving the machine.
8. Sliding and loss of control hazard—do not operate the machine near drop-offs or water; keep a safe distance from drop-offs.

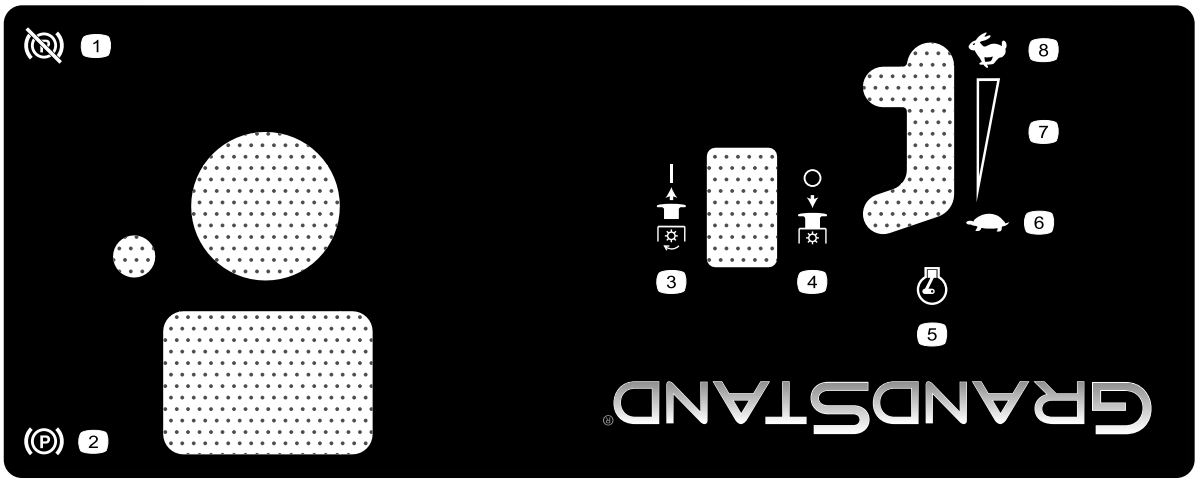

125-4679

1. Parking brake—disengaged
2. Parking brake—engaged
3. PTO—engaged
4. PTO—disengaged
5. Engine speed
6. Slow
7. Continuous variable setting
8. Fast

Product Overview

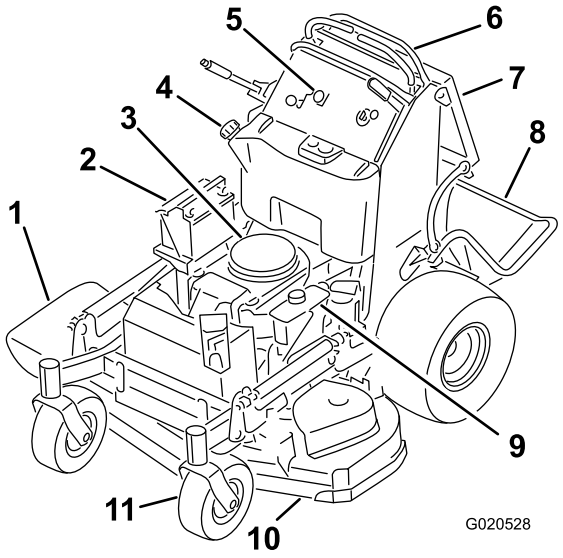

Figure 3

1. Side-discharge chute
2. Battery
3. Engine
4. Fuel tank
5. Controls
6. Motion-control levers
7. Operator cushion
8. Platform (down position)
9. Hydraulic tank
10. Mower deck
11. Front caster wheel

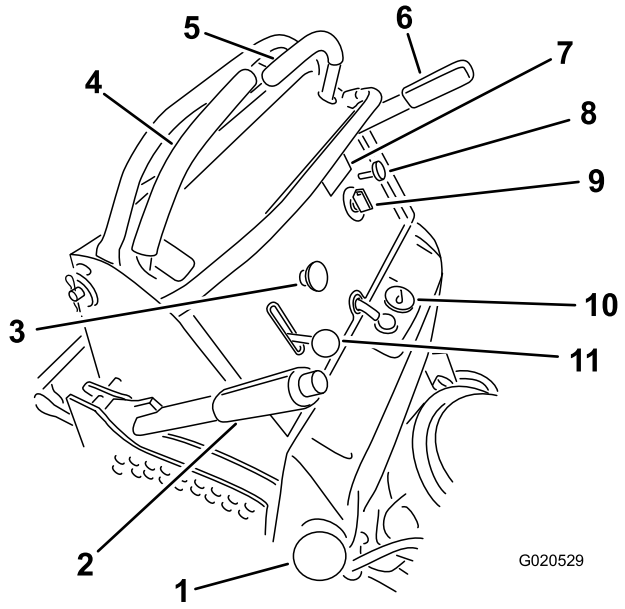

Figure 4

1. Fuel cap
2. Height-of-cut lever
3. Blade-control switch (PTO)
4. Right motion-control lever
5. Left motion-control lever
6. Parking-brake lever
7. Hour meter
8. Choke
9. Ignition switch
10. Fuel gauge
11. Throttle control

Controls

Become familiar with all the controls (Figure 4) before you start the engine and operate the machine.

Hour Meter

The hour meter records the number of hours the engine has operated. It operates when the engine is running. Use these times for scheduling regular maintenance (Figure 5).

Fuel Gauge

The fuel gauge is located on the top, middle of the tank (Figure 4).

Safety-Interlock Indicators

The black triangle symbols on the hour meter indicate which interlock component is in the correct position (Figure 5).

Battery-indicator Light

If the ignition key is turned to the On position for a few seconds, the battery voltage will display in the area where the hours are normally displayed.

The battery light turns on when the ignition is turned on, and when the charge is below the correct operating level (Figure 5).

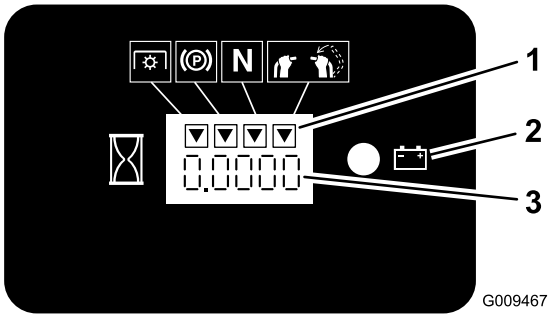

Figure 5

1. Safety-interlock symbols
2. Battery light
3. Hour meter

Throttle Control

The throttle control is variable between **Fast** and **Slow**.

Choke

Use the choke to start a cold engine.

Blade-Control Switch (PTO)

The blade-control switch (PTO) is used to engage the electric clutch to drive the mower blades with the right side motion-control lever in the center, unlocked position. Pull the switch up to engage the blades and release. To disengage the blades, push the blade-control switch (PTO) down or move or release the right side motion-control lever into the neutral-lock position.

Ignition Switch

This switch is used to start the mower engine and has 3 positions: **Off, Run** and **Start**.

Motion-Control Levers

The motion-control levers are used to drive the machine forward, reverse, and turn either direction.

Fuel-Shutoff Valve

Close the fuel shut-off valve (located behind the operator cushion on the right hand side of fuel tank) when transporting or storing the mower.

Attachments/Accessories

A selection of Toro approved attachments and accessories is available for use with the machine to enhance and expand its capabilities. Contact your Authorized Service Dealer or Distributor or go to www.Toro.com for a list of all approved attachments and accessories.

Specifications

Note: Specifications and design are subject to change without notice.

36-inch mowers:

Width with deflector down	131 cm (52 inches)
Length with platform down	188 cm (74 inches)
Length with platform up	155 cm (61 inches)
Height	122 cm (48 inches)
Weight	343 kg (756 lb)

40-inch mowers:

Width with deflector down	142 cm (56 inches)
Length with platform down	178 cm (70 inches)
Length with platform up	145 cm (57 inches)
Height	122 cm (48 inches)
Weight	351 kg (773 lb)

Operation

Adding Fuel

- For best results, use only clean, fresh (less than 30 days old), unleaded gasoline with an octane rating of 87 or higher ((R+M)/2 rating method).
- **Ethanol**: Gasoline with up to 10% ethanol (gasohol) or 15% MTBE (methyl tertiary butyl ether) by volume is acceptable. Ethanol and MTBE are not the same. Gasoline with 15% ethanol (E15) by volume is not approved for use. **Never use gasoline that contains more than 10% ethanol by volume**, such as E15 (contains 15% ethanol), E20 (contains 20% ethanol), or E85 (contains up to 85% ethanol). Using unapproved gasoline may cause performance problems and/or engine damage which may not be covered under warranty.
- **Do not** use gasoline containing methanol.
- **Do not** store fuel either in the fuel tank or fuel containers over the winter unless a fuel stabilizer is used.
- **Do not** add oil to gasoline.

⚠ DANGER

In certain conditions, gasoline is extremely flammable and highly explosive. A fire or explosion from gasoline can burn you and others and can damage property.

- **Fill the fuel tank outdoors, in an open area, when the engine is cold. Wipe up any gasoline that spills.**
- **Never fill the fuel tank inside an enclosed trailer.**
- **Do not fill the fuel tank completely full. Add gasoline to the fuel tank until the level is 6 to 13 mm (1/4 to 1/2 inch) below the bottom of the filler neck. This empty space in the tank allows gasoline to expand.**
- **Never smoke when handling gasoline, and stay away from an open flame or where gasoline fumes may be ignited by a spark.**
- **Store gasoline in an approved container and keep it out of the reach of children. Never buy more than a 30-day supply of gasoline.**
- **Do not operate without entire exhaust system in place and in proper working condition.**

⚠ DANGER

In certain conditions during fueling, static electricity can be released causing a spark which can ignite the gasoline vapors. A fire or explosion from gasoline can burn you and others and can damage property.

- **Always place gasoline containers on the ground away from your vehicle before filling.**
- **Do not fill gasoline containers inside a vehicle or on a truck or trailer bed because interior carpets or plastic truck bed liners may insulate the container and slow the loss of any static charge.**
- **When practical, remove gas-powered equipment from the truck or trailer and refuel the equipment with its wheels on the ground.**
- **If this is not possible, then refuel such equipment on a truck or trailer from a portable container, rather than from a gasoline dispenser nozzle.**
- **If a gasoline dispenser nozzle must be used, keep the nozzle in contact with the rim of the fuel tank or container opening at all times until fueling is complete.**

⚠ WARNING

Gasoline is harmful or fatal if swallowed. Long-term exposure to vapors can cause serious injury and illness.

- **Avoid prolonged breathing of vapors.**
- **Keep face away from nozzle and gas tank or conditioner bottle opening.**
- **Avoid contact with skin; wash off spillage with soap and water.**

Using Stabilizer/Conditioner

Use a fuel stabilizer/conditioner in the machine to provide the following benefits:

- Keeps gasoline fresh during storage of 90 days or less. For longer storage it is recommended that the fuel tank be drained.
- Cleans the engine while it runs
- Eliminates gum-like varnish buildup in the fuel system, which causes hard starting

Important: Do not use fuel additives containing methanol or ethanol.

Add the correct amount of gas stabilizer/conditioner to the gas.

Note: A fuel stabilizer/conditioner is most effective when mixed with fresh gasoline. To minimize the chance

of varnish deposits in the fuel system, use fuel stabilizer at all times.

Filling the Fuel Tank

Note: Do not fill the fuel tank completely full. Fill the fuel tank to the bottom of the filler neck. The empty space in the tank allows the gasoline to expand.

1. Park the machine on level ground.
2. Shut the engine off and set the parking brake.
3. Clean around the fuel-tank cap.
4. Fill the fuel tank to the bottom of the filler neck. Ensure there is empty space in the tank to allow the gasoline to expand (Figure 6).

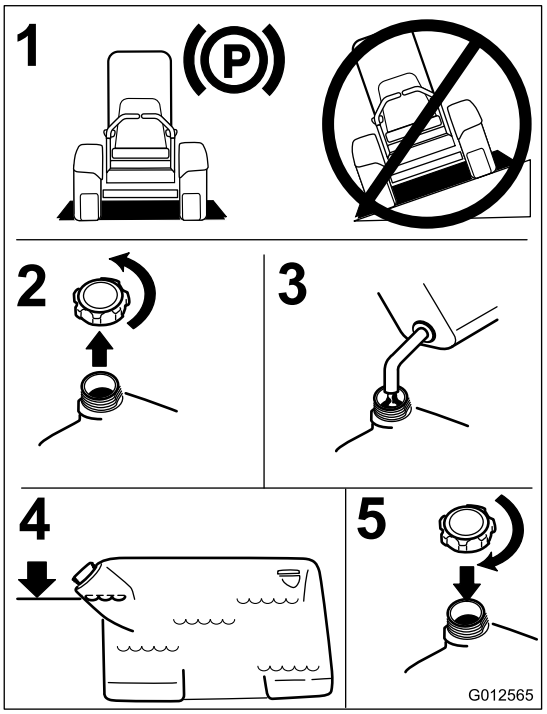

Figure 6

Checking the Engine-Oil Level

Before you start the engine and use the machine, check the oil level in the engine crankcase; refer to (page).

Note: Determine the left and right sides of the machine from the normal operating position.

Breaking in a New Machine

New engines take time to develop full power. Mower decks and drive systems have higher friction when new, placing additional load on the engine. Allow 40 to 50 hours of break-in time for new machines to develop full power and best performance.

Think Safety First

Carefully read all the safety instructions and decals in the safety section. Knowing this information could help you or any bystanders avoid injury.

The use of protective equipment for eyes, hearing, feet and head is recommended.

⚠ CAUTION

This machine produces sound levels in excess of 85 dBA at the operator's ear and can cause hearing loss through extended periods of exposure.

Wear hearing protection when operating this machine.

The use of protective equipment for eyes, ears, feet, and head is recommended.

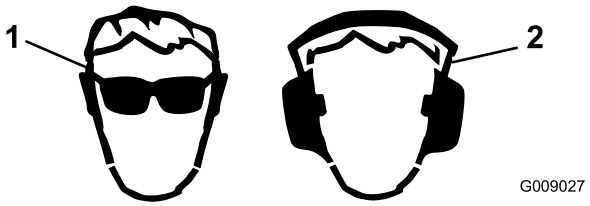

Figure 7

1. Wear safety glasses
2. Wear hearing protection

Operating the Parking Brake

Always set the parking brake when you stop the machine or leave it unattended. Before each use, check the parking brake for proper operation.

If the parking brake does not hold securely, adjust it; refer to Adjusting the Brakes (page 44).

⚠ CAUTION

Children or bystanders may be injured if they move or attempt to operate the machine while it is unattended.

Always remove the ignition key and set the parking brake when leaving the machine unattended, even if just for a few minutes.

Setting the Parking Brake

Pull the parking-brake lever rearward to the engaged position (Figure 8).

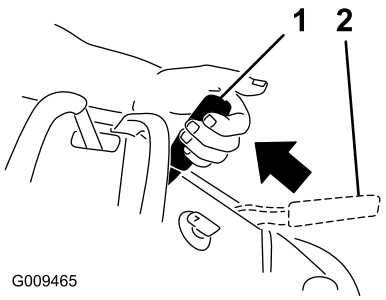

Figure 8

1. Parking brake engaged
2. Parking brake released

Releasing the Parking Brake

Push the parking-brake lever forward.

Operating the Mower-Blade-Control Switch (PTO)

The blade-control switch (PTO) is used in conjunction with the right side motion-control lever to engage and disengage the mower blades.

Engaging the Mower Blades (PTO)

1. To engage the mower blades, move the right side motion-control lever to the center, unlocked position.
2. Pull the blade-control switch (PTO) up and release it while holding down the right side motion-control lever in the center, unlocked position.

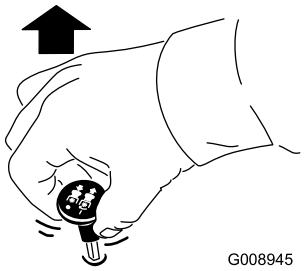

Figure 9

Disengaging the Mower Blades (PTO)

The following are two options for disengaging the mower blades.

- Push the blade-control switch (PTO) down to the Off position (Figure 10).

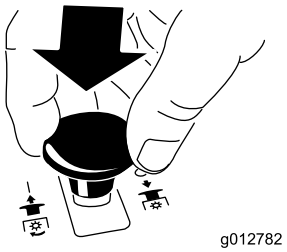

Figure 10

- Move the motion-control levers to neutral and move the right side motion-control lever into the neutral-lock position (Figure 11).

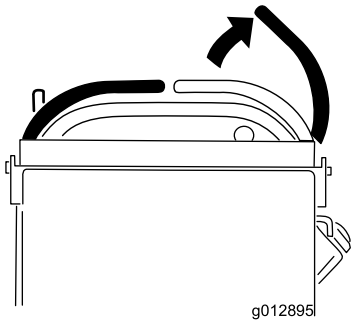

Figure 11

Operating the Throttle

The throttle control is variable between **Fast** and **Slow** positions (Figure 12).

Always use the Fast position when turning on the mower deck with the blade-control switch (PTO).

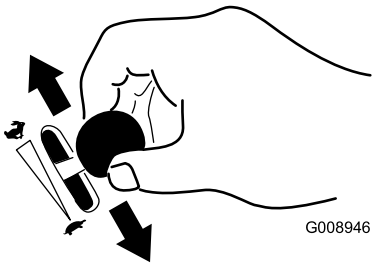

Figure 12

Operating the Choke

Use the choke to start a cold engine.

1. If the engine is cold, use the choke to start the engine.

2. Pull up on the choke knob to engage the choke before using the ignition switch (Figure 13).
3. Push down on the choke to disengage the choke after the engine has started (Figure 13).

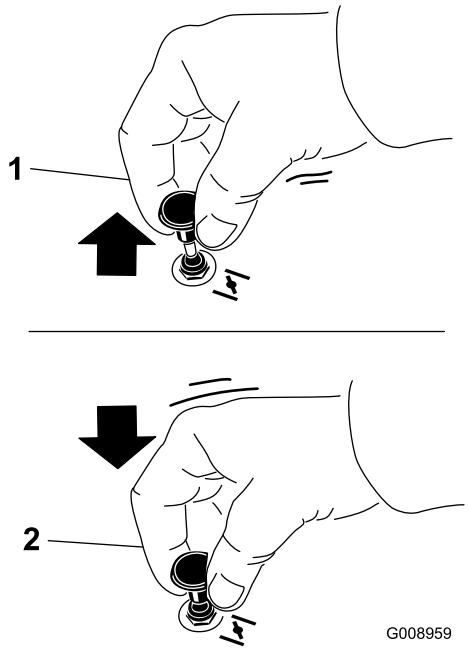

Figure 13

1. On position
2. Off position

Operating the Ignition Switch

1. Turn the ignition key to the Start position (Figure 14).

   Note: When the engines starts, release the key.

   Important: Do not engage starter for more than 5 seconds at a time. If the engine fails to start allow a 15 second cool-down period between attempts. Failure to follow these instructions can burn out the starter motor.

   Note: Additional starting cycles may be required when starting the engine for the first time after the fuel system has been without fuel completely.

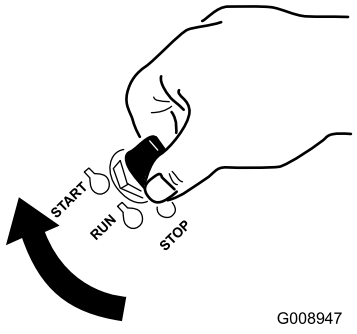

Figure 14

2. Turn the ignition key to the **stop** position to stop the engine.

Using the Fuel-Shutoff Valve

The fuel shut-off valve is located behind the right side of the operator cushion.

Close the fuel shut-off valve for transport, maintenance, and storage (Figure 15).

Ensure the fuel shut-off valve is open when starting the engine.

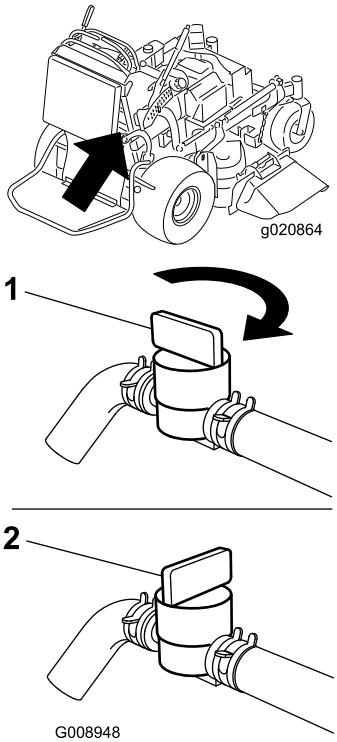

Figure 15

1. On position
2. Off positon

Starting and Stopping the Engine

Starting the Engine

1. Connect the wires to the spark plugs.
2. Open the fuel valve.
3. Move the right motion-control lever to neutral locked position.
4. Set the parking brake; refer to Setting the Parking Brake (page 16).
5. Move the blade-control switch (PTO) to the **Off** position.
6. Move the throttle lever midway between the **Slow** and **Fast** positions.

   Note: A warm or hot engine may not require choking.

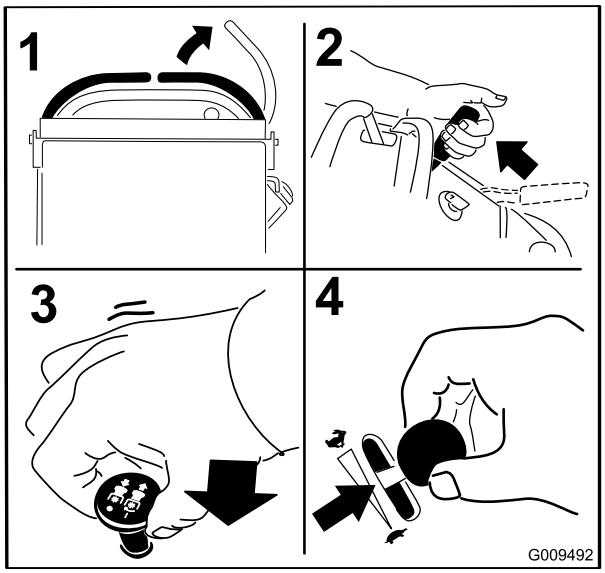

Figure 16

7. Turn the ignition key to the Start position (Figure 17). When the engines starts, release the key.

   Important: Do not engage the starter for more than 5 seconds at a time. If the engine fails to start, allow a 15 second cool-down period between attempts. Failure to follow these instructions can burn out the starter motor.

   Note: Additional starting cycles may be required when starting the engine for the first time after the fuel system has been without fuel completely.

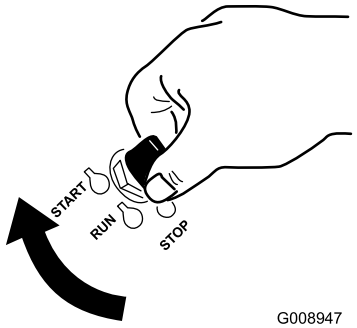

Figure 17

1. Off position
2. Run position
3. Start position

Stopping the Engine

⚠ CAUTION

Children or bystanders may be injured if they move or attempt to operate the tractor while it is unattended.

Always remove the ignition key and set the parking brake when leaving the machine unattended, even if just for a few minutes.

Let the engine idle at slow throttle (turtle) for 60 seconds before turning the ignition switch off.

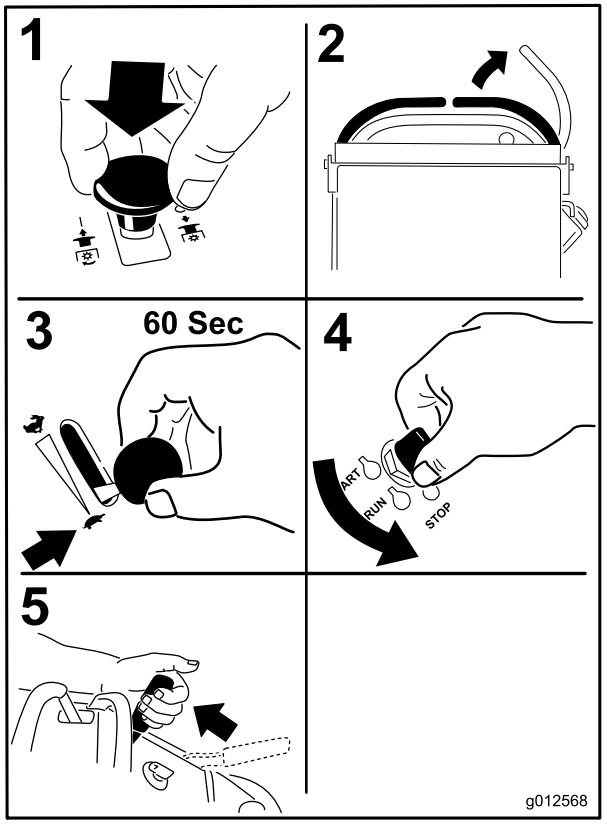

Figure 18

Important: Make sure the fuel-shutoff valve is closed before transporting or storing the machine, as fuel leakage may occur. Before storing the machine, pull wire off spark plug(s) to prevent possibility of accidental starting.

Using the Safety-Interlock System

⚠ CAUTION

If safety-interlock switches are disconnected or damaged the machine could operate unexpectedly causing personal injury.

- **Do not tamper with the interlock switches.**
- **Check the operation of the interlock switches daily and replace any damaged switches before operating the machine.**

Understanding the Safety-interlock System

The safety-interlock system is designed to prevent the mower blades from rotating unless:

- The right side motion-control lever is moved to the center, unlocked position.
- The blade-control switch (PTO) is pulled **on**.

The safety-interlock system is designed to stop the mower blades if you move or release the right side motion-control lever into the neutral-lock position.

The hour meter has symbols to notify the user when the interlock component is in the correct position. When the component is in the correct position, a triangle will light up in the corresponding square.

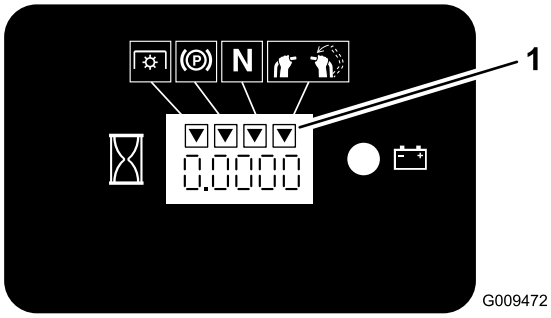

Figure 19

1. Triangles light up when the interlock components are in the correct position

Testing the Safety-Interlock System

Service Interval: Before each use or daily

Test the safety-interlock system before you use the machine each time.

Note: If the safety system does not operate as described below, have an Authorized Service Dealer repair the safety system immediately.

1. Start the engine; refer to Starting the Engine (page 17).
2. Set the parking brake.
3. Move the right side motion-control lever to the center, unlocked position.

   Note: The blades should not rotate.
4. Move the motion-control levers forward.

   Note: The engine should stop running.
5. Start the engine and release the parking brake.
6. Move the right side motion-control lever to the center, unlocked position.
7. Continue holding the right side motion-control lever in the center, unlocked position, pull up on the blade-control switch (PTO), and release.

   Note: The clutch should engage and the mower blades rotate.
8. Move or release the right side motion-control lever into the neutral-lock position.

   Note: The blades should stop rotating and the engine continues to run.
9. Push the blade-control switch down and move the right side motion-control lever to the center, unlocked position.
10. Continue holding the right side motion-control lever in the center, unlocked position, pull up on the blade-control switch (PTO), and release.

    Note: The clutch should engage and the mower blades rotate.
11. Push the blade-control switch (PTO) down to the Off position.

    Note: The blades should stop rotating.
12. With the engine running, pull up the blade-control switch (PTO) and release it without holding right side motion-control lever to the center, unlocked position.

    Note: The blades should not rotate.

⚠ WARNING

The operator platform is heavy and may cause injury when lowering and raising the operator platform. The platform may suddenly drop if not supported when the latch pin is pulled out.

- **Do not put your hands or fingers in the platform-pivot area when lowering or raising the operator platform.**
- **Make sure the platform is supported when the latch pin is pulled out.**
- **Make sure the latch secures the platform when folding it in the up position. Push it tight against the cushion for the latch pin to lock into place.**
- **Keep bystanders away when raising or lowering the platform.**

Operating the Platform

The machine can be used with the platform in the up or down position. It is the operator's preference on which position to use.

Operating the Machine with the Platform Up

Operating the machine with the platform up is recommended for the following:

- Mowing near drop-offs
- Mowing small areas where the machine is too large
- Areas with low, over-hanging branches or obstacles
- Loading the machine for transport
- Driving up slopes

To raise the platform, pull the back of the platform up so that the latch pin and knob lock it into place. Push it tight against the cushion for the latch pin to lock it into place.

Operating the Machine with the Platform Down

Operating the machine with the platform down is recommended for the following:

- Mowing most areas
- Driving across slopes
- Driving down slopes

To lower the platform, push the platform forward against the cushion to release pressure on the latch pin, then pull the knob out, and lower the platform (Figure 20).

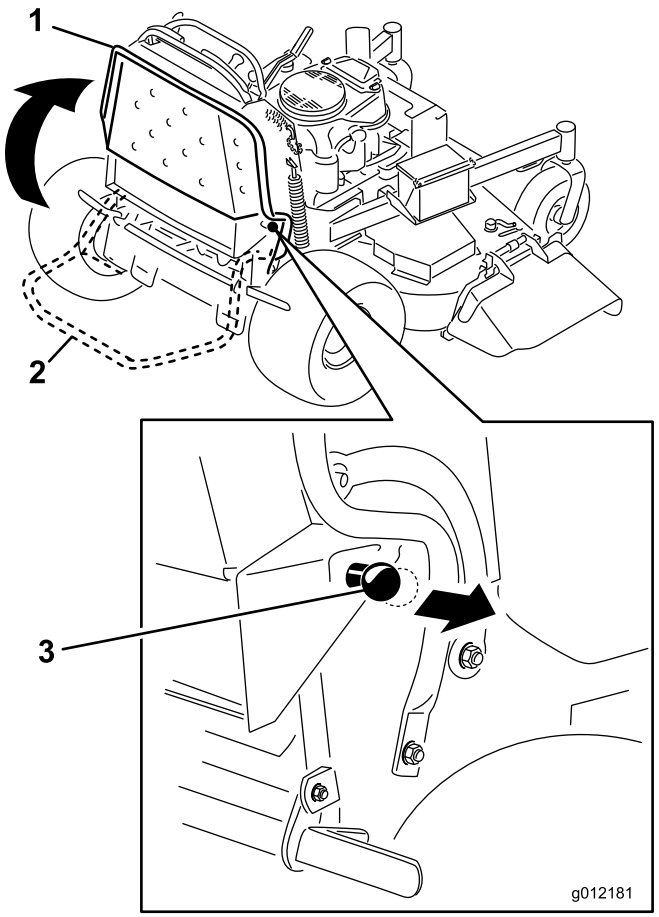

Figure 20

1. Platform up
2. Platform down
3. Pull the knob out to release the platform.

Driving Forward or Backward

The throttle control regulates the engine speed as measured in rpm (revolutions per minute). Place the throttle control in the Fast position for best performance. Always operate in the full-throttle position when mowing.

⚠ CAUTION

Machine can spin very rapidly. Operator may lose control of machine and cause personal injury or damage to machine.

Slow the machine down before making sharp turns.

Driving Forward

1. Release the parking brake; refer to Releasing the Parking Brake (page 16).
2. Move the right side motion-control lever to the center, unlocked position.

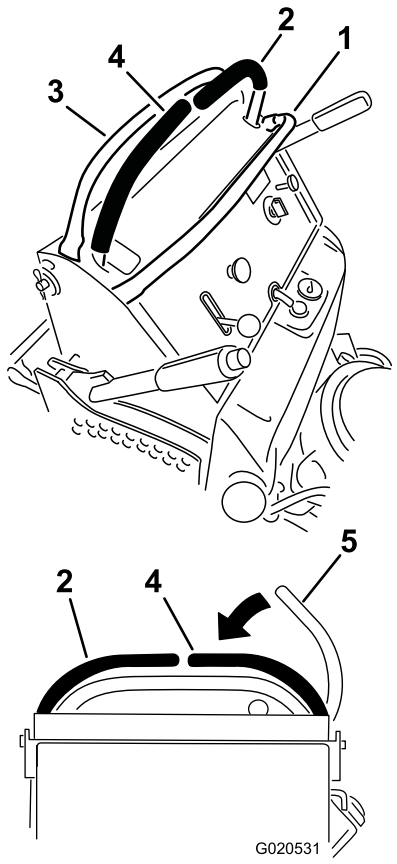

Figure 21

1. Front reference bar
2. Left control lever
3. Rear reference bar
4. Right control lever
5. Right control lever in the neutral-lock position

3. To go forward, move the speed-control lever to the desired speed.
4. Slowly push the motion-control levers forward (Figure 22).

   Note: The engine will kill if a motion-control lever is moved with the parking brake engaged.

   Note: The farther you move the motion-control levers in either direction, the faster the machine will move in that direction.

   Note: To stop, pull the motion-control levers back to the neutral position.

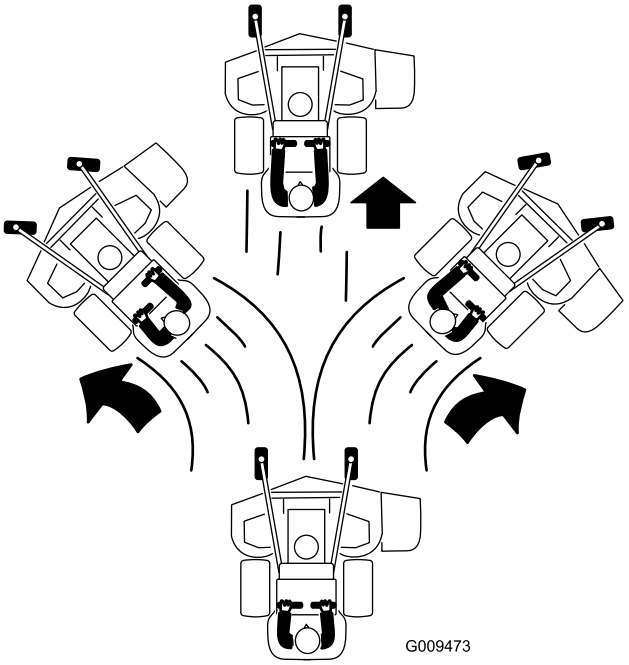

Figure 22

Driving Backward

1. Move the right side motion-control lever to the center, unlocked position.
2. Slowly pull the motion-control levers rearward (Figure 23).

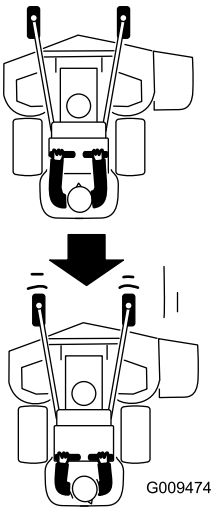

Figure 23

Stopping the Machine

To stop the machine, move the motion-control levers to neutral, move the right side motion-control lever into the neutral-lock position, disengage the power take off (PTO), and turn the ignition key to off.

Set the parking brake when you leave the machine; refer to Setting the Parking Brake (page 16). Remember to remove the key from the ignition switch.

⚠ CAUTION

Children or bystanders may be injured if they move or attempt to operate the tractor while it is unattended.

Always remove the ignition key and set the parking brake when leaving the machine unattended, even if just for a few minutes.

Pushing the Machine by Hand

The bypass valves allow the machine to be pushed by hand without the engine running.

Important: Always push the machine by hand. Never tow the machine because hydraulic damage may occur.

1. Disengage the PTO, move the motion-control levers to the neutral-locked position, and set the parking brake.
2. Lower the mower deck to the lowest height-of-cut (HOC).

   Note: This will allow access to the bypass valves.
3. Open the bypass valve on both pumps by turning them counterclockwise 1 to 2 turns (Figure 24).

   Note: This allows hydraulic fluid to by-pass the pumps and the wheels to turn.

   Note: Rotate the bypass valves a maximum of 2 turns so the valve does not come out of the body causing fluid to run out.

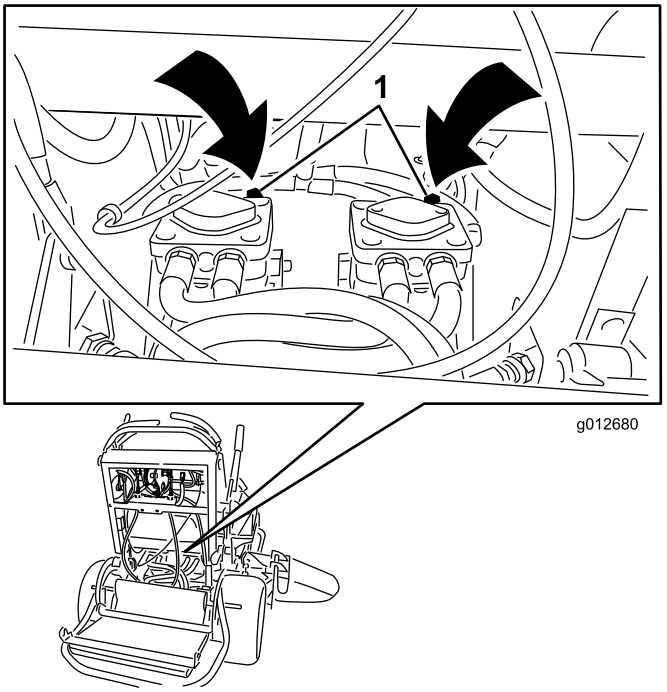

Figure 24

1. Pump-bypass valve

4. Release the parking brake.
5. Push the machine to the desired location.
6. Set the parking brake.
7. Close the bypass valves, but do not overtighten them.
8. Torque to 12 to 15 N-m (110 to 130 in-lb).

   Important: Do not start or operate the machine with the bypass valves open. Damage to system may occur.

Transporting the Machine

Use a heavy-duty trailer or truck to transport the machine. Ensure that the trailer or truck has all necessary brakes, lighting, and marking as required by law. Please carefully read all the safety instructions.

To transport the machine:

1. Raise the platform of the machine before driving up onto the trailer or truck.
2. If using a trailer, connect it to the towing vehicle and connect the safety chains.
3. If applicable, connect the trailer brakes.
4. Load the machine onto the trailer or truck.
5. Stop the engine, remove the key, set the brake, and close the fuel valve.
6. Use the metal tie-down loops on the machine to securely fasten the machine to the trailer or truck with straps, chains, cable, or ropes (Figure 25).

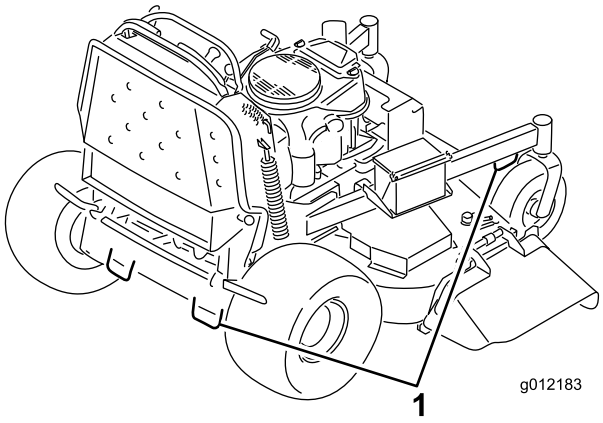

Figure 25

1. Traction unit tie-down loop

Loading Machines

Use extreme caution when loading units onto trailers or trucks. One full-width ramp that is wide enough to extend beyond the rear tires is recommended instead of individual ramps for each side of the unit (Figure 26). The platform when down and locked into position, extends back between the rear wheels and serves as a stop for tipping backward. Having a full-width ramp provides a surface for the platform to contact if the unit starts to tip backward. With the platform up, a full-width ramp provides a surface to walk on behind the unit. The operator should determine if it is best to have the platform up or down when loading, depending on conditions. If it is not possible to use one full-width ramp, use enough individual ramps to simulate a full-width, continuous ramp.

The ramp should be long enough so that the angles do not exceed 15 degrees (Figure 26). A steeper angle may cause mower components to get caught, as the unit moves from ramp to trailer or truck. Steeper angles may also cause the unit to tip backward. If loading on or near a slope, position the trailer or truck so it is on the down side of the slope and the ramp extends up the slope. This will minimize the ramp angle. The trailer or truck should be as level as possible.

Important: Do not attempt to turn the unit while on the ramp; you may lose control and drive off the side.

Avoid sudden acceleration when driving up a ramp and sudden deceleration when backing down a ramp. Both maneuvers can cause the unit to tip backward.

⚠ WARNING

Loading a unit onto a trailer or truck increases the possibility of backward tip-over, and could cause serious injury or death.

- **Use extreme caution when operating a unit on a ramp.**
- **Use only a single, full-width ramp; do not use individual ramps for each side of the unit.**
- **If individual ramps must be used, use enough ramps to create an unbroken ramp surface wider than the unit.**
- **Do not exceed a 15-degree angle between ramp and ground, or between a ramp, a trailer, or a truck.**
- **Avoid sudden acceleration while driving unit up a ramp to avoid tipping backward.**
- **Avoid sudden deceleration while backing unit down a ramp to avoid tipping backward.**

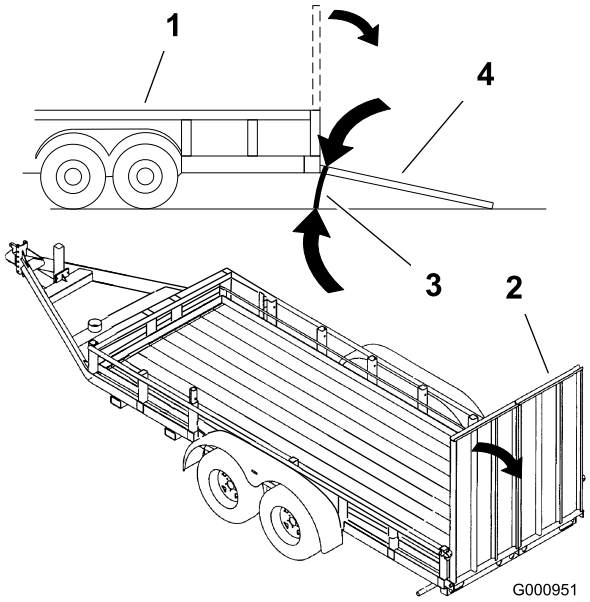

Figure 26

1. Trailer
2. Full-width ramp
3. Not greater than 15 degrees
4. Full-width ramp (side view)

Side Discharging or Mulching the Grass

This mower has a hinged grass deflector that disperses clippings to the side and down toward the turf.

⚠ DANGER

Without the grass deflector, discharge cover, or complete grass catcher assembly mounted in place, you and others are exposed to blade contact and thrown debris. Contact with rotating mower blade(s) and thrown debris will cause injury or death.

- **Do not remove the grass deflector from the mower, because the grass deflector routes material down toward the turf. If the grass deflector is ever damaged, replace it immediately.**
- **Never put your hands or feet under the mower.**
- **Never try to clear the discharge area or mower blades unless you release the bail and the power take off (PTO) is off. Rotate the ignition key to the Off position. Also remove the key and pull the wire(s) off the spark plug(s).**

Adjusting the Height-of-Cut

The height-of-cut can be adjusted from 25 to 127 mm (1 to 5 inches) in 6 mm (1/4 inch) increments.

1. Move the height-of-cut lever to the transport position (all the way up).
2. To adjust, rotate the pin 90 degrees and remove the pin from the height-of-cut bracket.
3. Select a hole in the height-of-cut bracket corresponding to the height-of-cut desired and insert the pin (Figure 27).
4. Push the button on top and lower the height-of-cut lever to the pin (Figure 27).

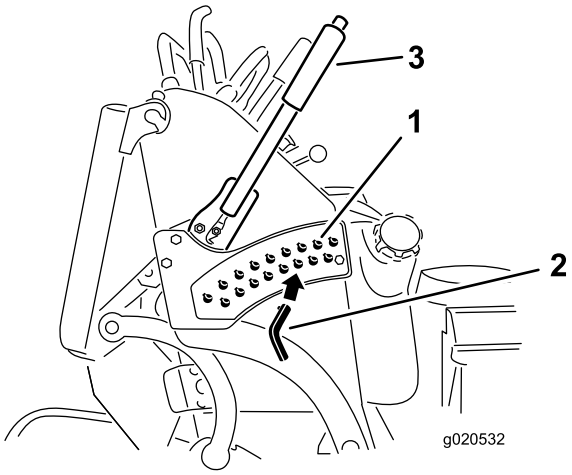

Figure 27

1. Height-of-cut holes
2. Height-of-cut pin
3. Height-of-cut lever

Adjusting the Flow Baffle

The mower-discharge flow can be adjusted for different types of mowing conditions. Position the cam lock and baffle to give the best quality of cut.

1. Disengage the PTO, move the motion-control levers to the neutral-locked position, and set the parking brake.
2. Stop the engine, remove the key, and wait for all moving parts to stop before leaving the operating position.
3. To adjust the baffle, loosen the nut (Figure 28).
4. Adjust the baffle and nut in the slot to the desired discharge flow and tighten the nut.

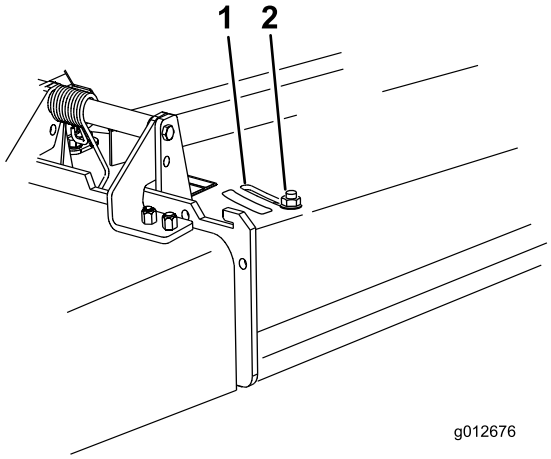

Figure 28

1. Slot
2. Nut

Positioning the Flow Baffle

The following figures are only for recommended use. Adjustments will vary by grass type, moisture content, and the height of the grass.

Note: If the engine power draws down, and the mower ground speed is the same, open up the baffle.

Position A

This is the full, rear position (see Figure 29). The suggested use for this position is as follows:

- In short, light grass mowing conditions
- In dry conditions
- Smaller grass clippings
- Propels grass clippings farther away from the mower

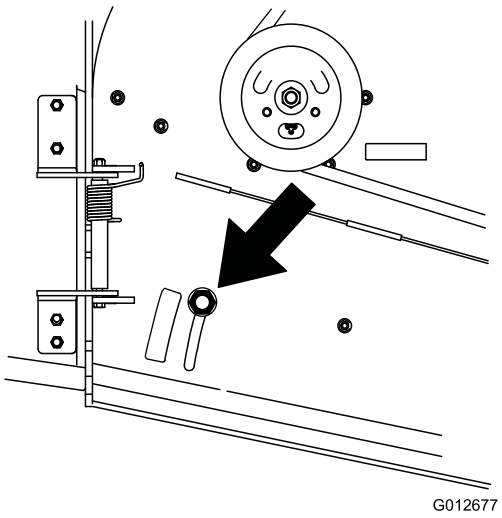

Figure 29

Position B

Use this position when bagging (Figure 30).

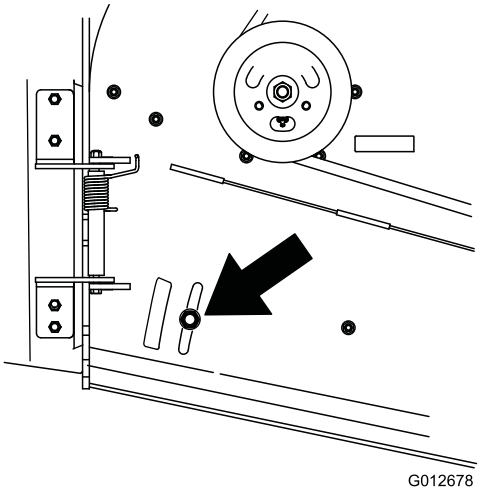

Figure 30

Position C

This is the full, open position (Figure 31). The suggested use for this position is as follows:

- In tall, dense grass mowing conditions
- In wet conditions
- Lowers the engine-power consumption
- Allows increased ground speed in heavy conditions

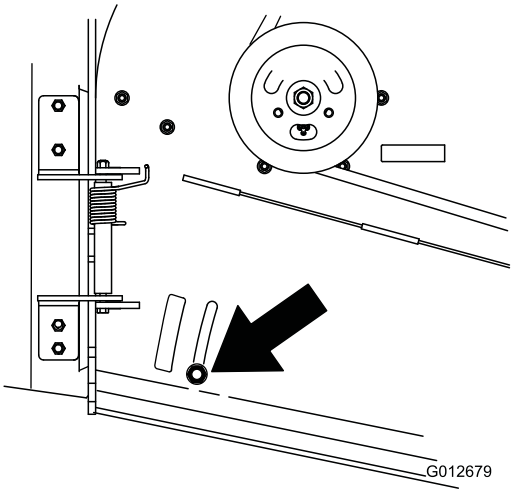

Figure 31

Using Counterweights

- Weights are installed to improve handling, balance and improve performance.
- Weights can be added or removed to create optimized performance under different mowing conditions and for operator preference.
- It is recommended that weights be added or removed one at a time until the desired handing and balance is achieved.

Note: Contact an Authorized Service Dealer to order a Weight Kit.

⚠ WARNING

Excessive weight changes can effect handling and operation of the machine. This could cause serious injury to you or bystanders.

Make weight changes in small increments only.

Evaluate the mower after each weight change to ensure the machine can be operated safely.

Maintenance

Note: Determine the left and right sides of the machine from the normal operating position.

Recommended Maintenance Schedule(s)

Maintenance Service Interval	Maintenance Procedure
After the first 8 hours	• Change the engine oil. • Check the hydraulic-fluid level. • Change the hydraulic filter.
Before each use or daily	• Check the safety-interlock system. • Check the engine-oil level. • Clean the air-intake screen. • Check the brakes. • Inspect the blades. • Clean the mower deck.
Every 25 hours	• Clean foam air-cleaner element.
Every 50 hours	• Grease the mower-deck idler arms (more often in dirty or dusty conditions). • Grease the lift linkage (more often in dirty or dusty conditions). • Clean the paper air-cleaner element. • Check the spark arrester (if equipped). • Check the tire pressure. • Check the hydraulic-fluid level.
Every 100 hours	• Change the engine oil (more often in dirty or dusty conditions). • Check, clean and gap the spark plug. • Check the battery. • Check the electric clutch. • Check and clean engine cooling fins and shrouds. • Check the pump-drive belt. • Check the mower-deck belt(s). • Check the pump-drive belt. • Check the hydraulic hoses.
Every 200 hours	• Replace the paper air-cleaner element. • Change the engine-oil filter.
Every 250 hours	• Change the hydraulic oil when using Mobil® 1 oil.
Every 500 hours	• Adjust the caster-pivot bearing. • Change the hydraulic oil when using Toro® HYPR-OIL™ 500 hydraulic oil. • Change the hydraulic filter.
Before storage	• Paint chipped surfaces. • Perform all maintenance procedures listed above before storage.
Yearly	• Grease the front caster pivots (more often in dirty or dusty conditions). • Lubricate the caster-wheel hubs. • Replace the fuel filter.

Important: **Refer to your engine owner's manual for additional maintenance procedures.**

⚠ CAUTION

If you leave the key in the ignition switch, someone could accidently start the engine and seriously injure you or other bystanders.

Remove the key from the ignition and disconnect the spark plug wires from the spark plugs before you do any maintenance. Set the wires aside so that they do not accidentally contact the spark plugs.

Premaintenance Procedures

Raising the Mower for Access

The front of the mower can be raised and supported on its back for access under the machine for maintenance.

1. Raise the platform; refer to Operating the Platform (page 20).
2. Remove the battery.

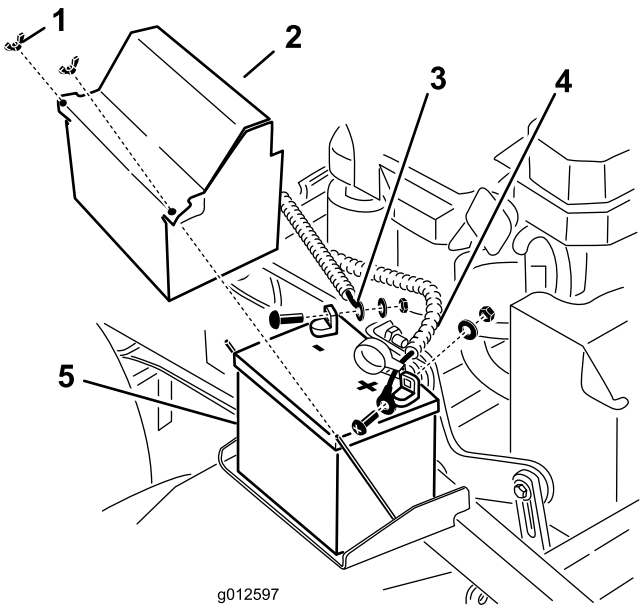

Figure 32

1. Wing nut
2. Battery cover
3. Negative (–) battery cable
4. Positive (+) battery cable
5. Battery

3. Drain the fuel from the fuel tank; refer to Draining the Fuel Tank (page 37).
4. Remove the cap of the hydraulic tank and place a piece of plastic over the opening and install the hydraulic cap.

   Note: This will seal the hydraulic tank and prevent it from leaking out.

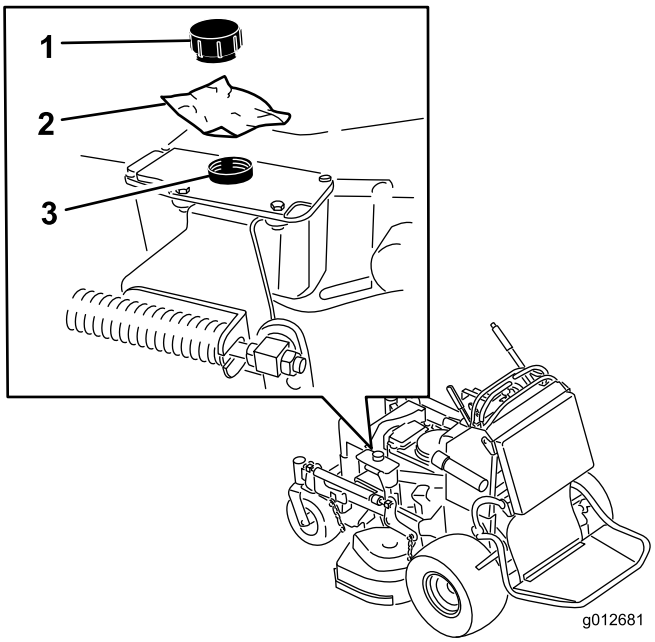

Figure 33

1. Cap
2. Piece of plastic
3. Hydraulic tank

5. With 2 people, raise the front of the mower so it rests on the drive tires and the platform in the up position.
6. Perform any maintenance on the machine.
7. With 2 people, lower the front of the mower to the ground.
8. Remove the plastic under the hydraulic-tank cap.
9. Install the battery for the machine.

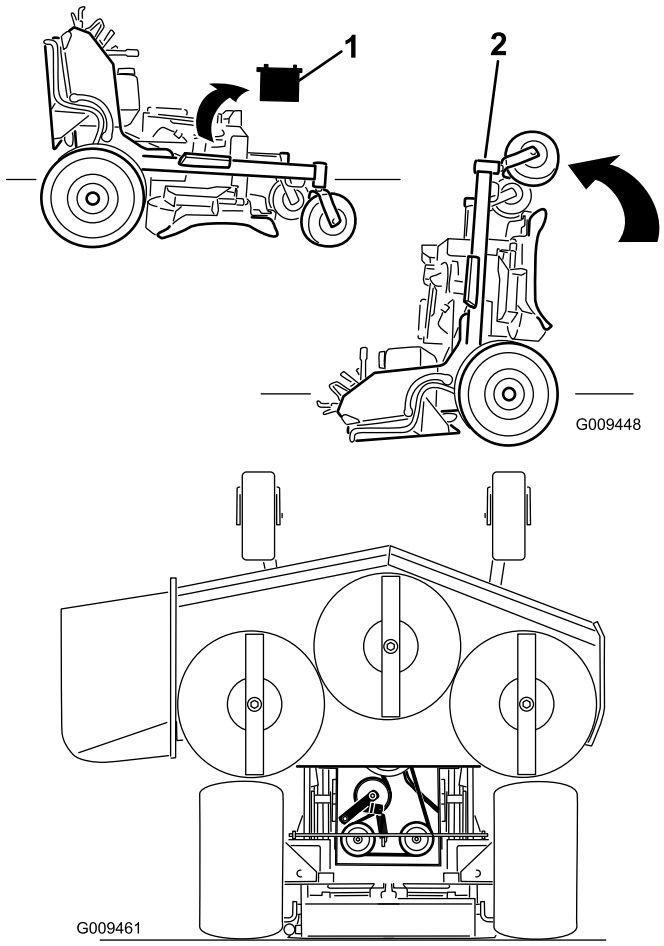

Figure 34

1. Remove battery
2. With 2 people, lift the front end of the mower (ensure the platform is up)

Releasing the Cushion for Rear Access

The cushion can be released for rear access to the machine for maintenance or adjustment.

1. Lower the platform.
2. Remove the hairpin-cotter pins on each side of the cushion.
3. Slide the large washers with plastic bushings to the inside.
4. Remove the cushion and lower it to the platform.
5. Perform any maintenance or adjustment on the machine.
6. Raise the cushion and slide it onto the pins on both sides of the machine (Figure 35).
7. Slide the large washers with plastic bushings into the cushion bracket and secure them with a hairpin cotter (Figure 35).

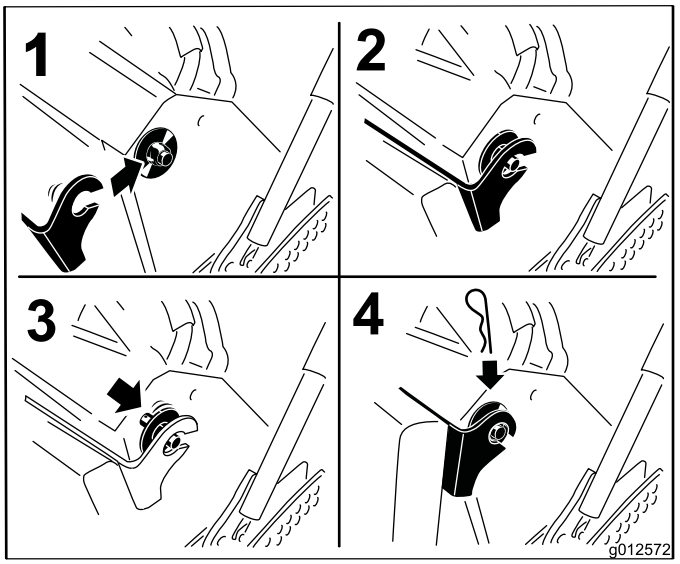

Figure 35

Lubrication

Grease with No. 2 general purpose lithium base or molybdenum base grease.

Lubricating the Machine

Service Interval: Every 50 hours—Grease the mower-deck idler arms (more often in dirty or dusty conditions).

Every 50 hours—Grease the lift linkage (more often in dirty or dusty conditions).

1. Disengage the PTO and set the parking brake.
2. Stop the engine, remove the key, and wait for all moving parts to stop before leaving the operating position.
3. Clean the grease fittings with a rag.

   Note: Make sure to scrape any paint off the front of the fitting(s).
4. Connect a grease gun to the fitting.
5. Pump grease into the fittings until grease begins to ooze out of the bearings.
6. Wipe up any excess grease.

Use the following graphics for locating the grease points.

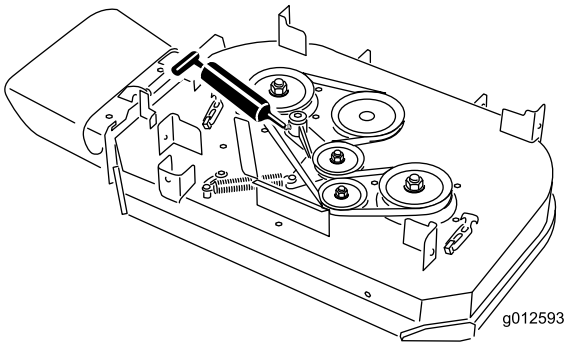

Figure 36
36-inch Mower Deck

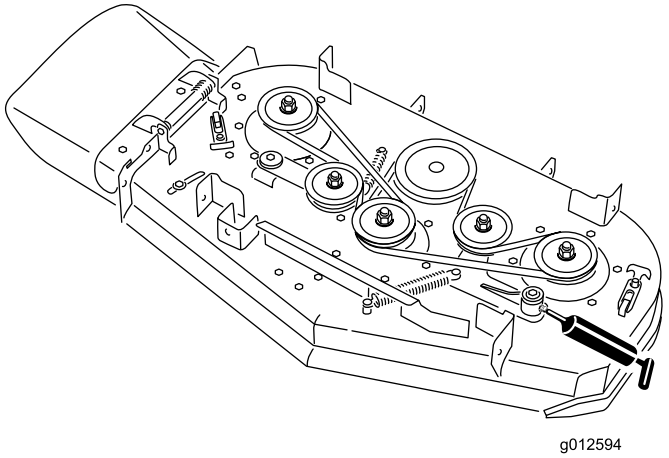

Figure 37
40-inch Mower Deck

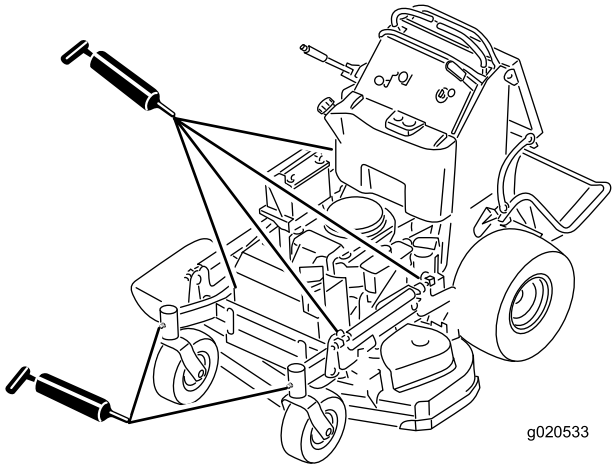

Figure 38

Greasing the Front Caster Pivots

Service Interval: Yearly

Lubricate the front caster pivots once a year.

1. Remove the dust cap and adjust the caster pivots; refer to (page).

   Note: Keep the dust cap off until greasing is done.
2. Remove the hex plug.
3. Thread a grease fitting into the hole.
4. Pump grease into the fitting until it oozes out around the top bearing.
5. Remove the grease fitting in the hole.
6. Install the hex plug and cap.

Lubricating the Caster-Wheel Hubs

Service Interval: Yearly

1. Stop the engine, wait for all moving parts to stop, engage the parking brake, and remove the key.

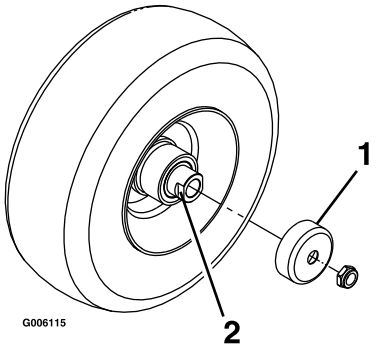

Figure 39

1. Seal guard
2. Spacer nut with wrench flats

2. Remove the caster wheel from the caster forks.
3. Remove the seal guards from the wheel hub.
4. Remove one of the spacer nuts from the axle assembly in the caster wheel.

   Note: Thread-locking adhesive has been applied to lock the spacer nuts to the axle. Remove the axle (with the other spacer nut still assembled to it) from the wheel assembly.
5. Pry out the seals and inspect bearings for wear or damage, and replace if necessary.
6. Pack the bearings with a general-purpose grease.
7. Insert 1 bearing and 1 seal into the wheel.

   Note: The seals must be replaced.
8. If the axle assembly has had both spacer nuts removed (or broken loose), apply a thread-locking adhesive to one spacer nut and thread it onto the axle with the wrench flats facing outward.

   Note: Do not thread spacer nut all of the way onto the end of the axle. Leave approximately 3 mm (1/8 inch) from the outer surface of the spacer nut to the end of the axle inside the nut.
9. Insert the assembled nut and axle into the wheel on the side of the wheel with the new seal and bearing.
10. With the open end of the wheel facing up, fill the area inside the wheel around the axle full of general-purpose grease.
11. Insert the second bearing and the new seal into the wheel.
12. Apply a thread-locking adhesive to the second spacer nut, and thread it onto the axle with the wrench flats facing outward.
13. Torque the nut to 8 to 9 N-m (71 to 80 in-lb), loosen, then torque it to 2 to 3 N-m (20 to 25 in-lb).

    Note: Make sure axle does not extend beyond either nut.
14. Install the seal guards over the wheel hub and insert wheel into caster fork.
15. Install caster bolt and tighten nut fully.

Important: To prevent seal and bearing damage, check the bearing adjustment often by spinning the caster tire. The tire should not spin freely (more than 1 or 2 revolutions) or have any side play. If the wheel spins freely, adjust the torque on the spacer nut until there is a slight amount of drag, and apply thread-locking adhesive.

Engine Maintenance

Servicing the Air Cleaner

Service Interval/Specification

Inspect the foam and paper elements and replace them if they are damaged or excessively dirty.

Note: Service the air cleaner more frequently (every few operating hours) if the operating conditions are extremely dusty or sandy.

Important: Do not oil the foam or paper element.

Removing the Foam and Paper Elements

1. Disengage the PTO and set the parking brake.
2. Stop the engine, remove the key, and wait for all moving parts to stop before leaving the operating position.
3. Clean around the air cleaner to prevent dirt from getting into the engine and causing damage (Figure 40).
4. Unscrew the cover knobs and remove the air-cleaner cover (Figure 40).
5. Unscrew the hose clamp and remove the air-cleaner assembly (Figure 40).
6. Carefully pull the foam element off the paper element (Figure 40).

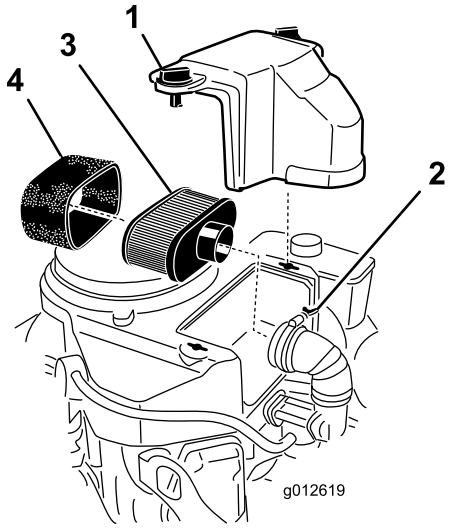

Figure 40

1. Cover
2. Hose clamp
3. Paper element
4. Foam element

Cleaning the Foam Air-Cleaner Element

Service Interval: Every 25 hours

1. Wash the foam element in liquid soap and warm water. When the element is clean, rinse it thoroughly.
2. Dry the element by squeezing it in a clean cloth.

Important: Replace the foam element if it is torn or worn.

Servicing the Paper Air-Cleaner Element

Service Interval: Every 50 hours—Clean the paper air-cleaner element.

Every 200 hours—Replace the paper air-cleaner element.

1. Clean the paper element by tapping gently to remove dust.

   Note: If it is very dirty, replace the paper element with a new one (Figure 40).
2. Inspect the element for tears, an oily film, or damage to the rubber seal.

Installing the Foam and Paper Elements

Important: To prevent engine damage, always operate the engine with the complete foam and paper air-cleaner assembly installed.

1. Carefully slide the foam element onto the paper air-cleaner element (Figure 40).
2. Place the air-cleaner assembly onto the air cleaner base or hose and secure it (Figure 40).
3. Place the air-cleaner cover into position and tighten the cover knob (Figure 40).

Servicing the Engine Oil

Service Interval: Before each use or daily—Check the engine-oil level.

After the first 8 hours—Change the engine oil.

Every 100 hours—Change the engine oil (more often in dirty or dusty conditions).

Every 200 hours—Change the engine-oil filter.

Note: Change the oil more frequently when the operating conditions are extremely dusty or sandy.

Note: There are different oil capacities for the different models listed in this manual. Ensure the correct amount of oil is used.

Important: Remember to add 80% of the oil and then gradually fill it to the Full mark on the dipstick.

Oil Type: Detergent oil (API service SF, SG, SH, SJ or SL)

Engine Oil Capacity: 1.7 L (58 oz) with the filter removed; 1.5 L (51 oz) without the filter removed

Viscosity: Refer to the table below:

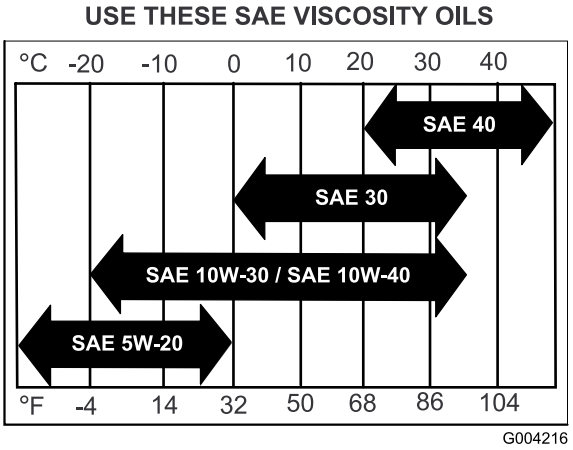

Figure 41

Checking the Engine-Oil Level

Note: Check the oil when the engine is cold.

⚠ WARNING

Contact with hot surfaces may cause personal injury.

Keep hands, feet, face, clothing and other body parts away the muffler and other hot surfaces.

Important: Do not overfill the crankcase with oil because damage to the engine may result. Do not run engine with oil below the low mark because the engine may be damaged.

1. Disengage the PTO, move the motion-control levers to the neutral-locked position, and set the parking brake.
2. Stop the engine, remove the key, and wait for all moving parts to stop before leaving the operating position (Figure 42).

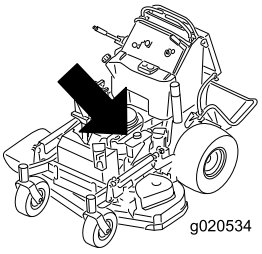

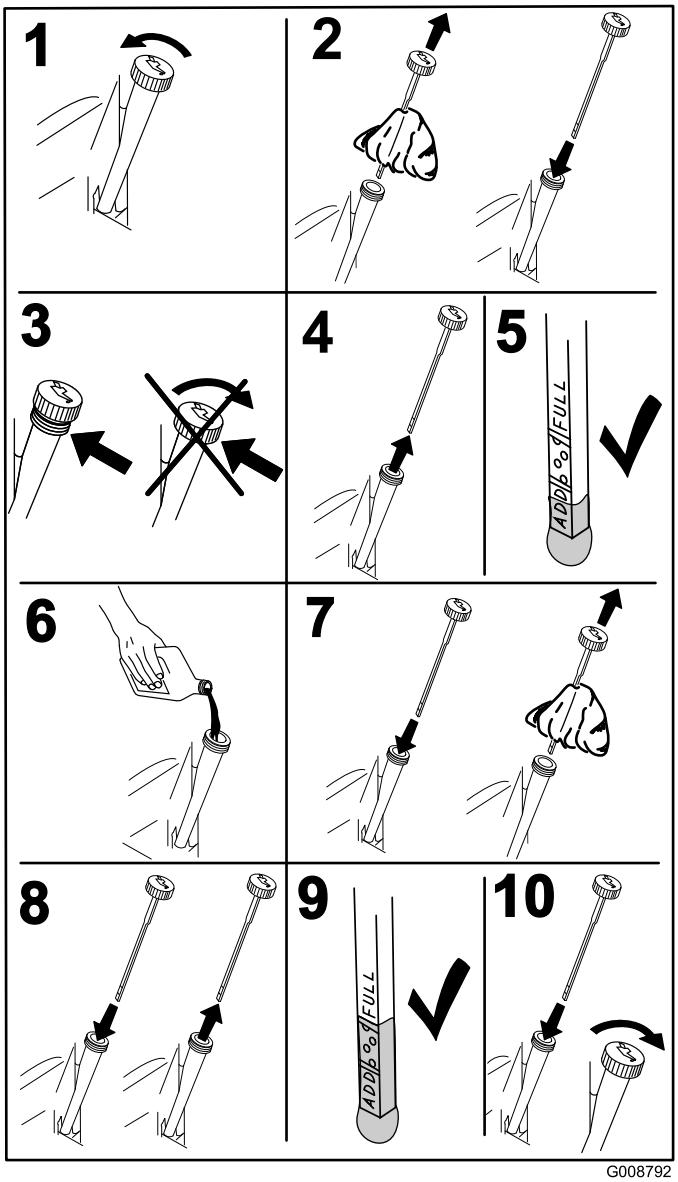

Figure 42

Changing the Engine Oil

Note: Dispose of the used oil at a recycling center.

1. Park the machine so that the drain side is slightly lower than the opposite side to assure the oil drains completely.
2. Disengage the PTO, move the motion control levers to the neutral locked position and set the parking brake.
3. Stop the engine, remove the key, and wait for all moving parts to stop before leaving the operating position (Figure 43).
4. Change the engine oil as shown in Figure 43.

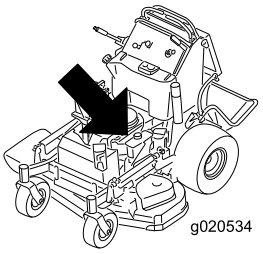

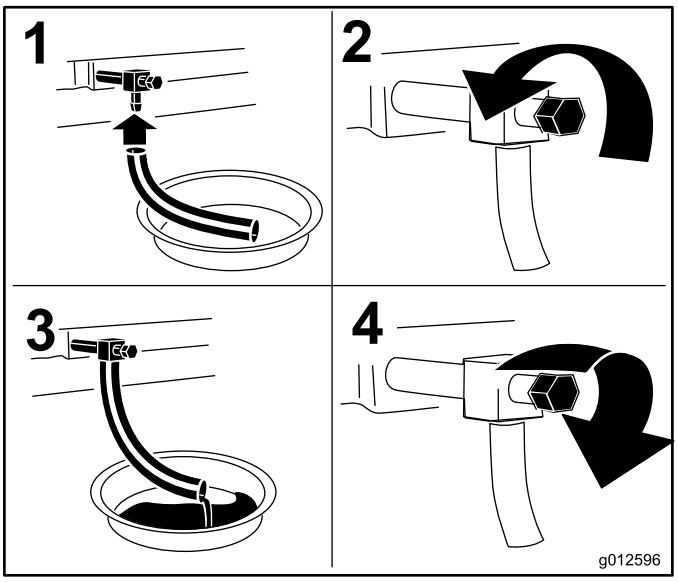

Figure 43

5. Slowly pour approximately 80% of the specified oil into the filler tube and slowly add the additional oil to bring it to the **Full** mark (Figure 44).

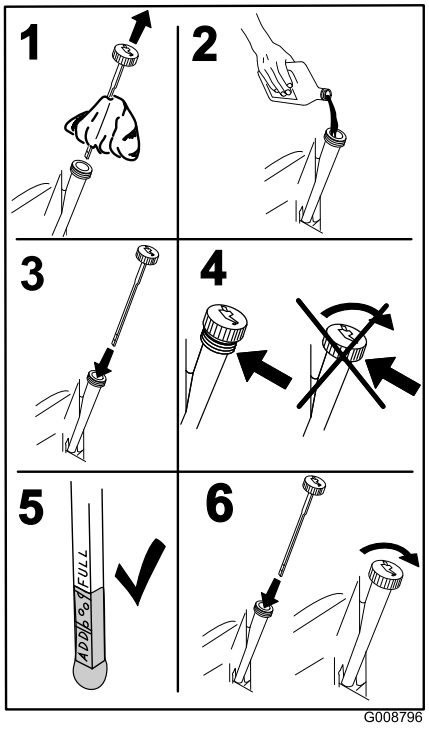

Figure 44

Changing the Engine-Oil Filter

Note: Change the engine-oil filter more frequently when operating conditions are extremely dusty or sandy.

1. Drain the oil from the engine; refer to Changing the Engine Oil (page 34).
2. Place a rag under the oil filter to soak up any spilled oil.

   Important: Spilled oil may drain under the engine and onto the clutch. Oil spilled on the clutch may damage the clutch, cause the blades to stop slowly when the clutch is in the Off position, and cause the clutch to slip when the clutch is switched to the On position. Wipe up any spilled oil.
3. Change the engine-oil filter (Figure 45).

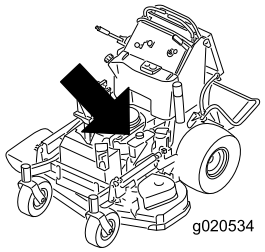

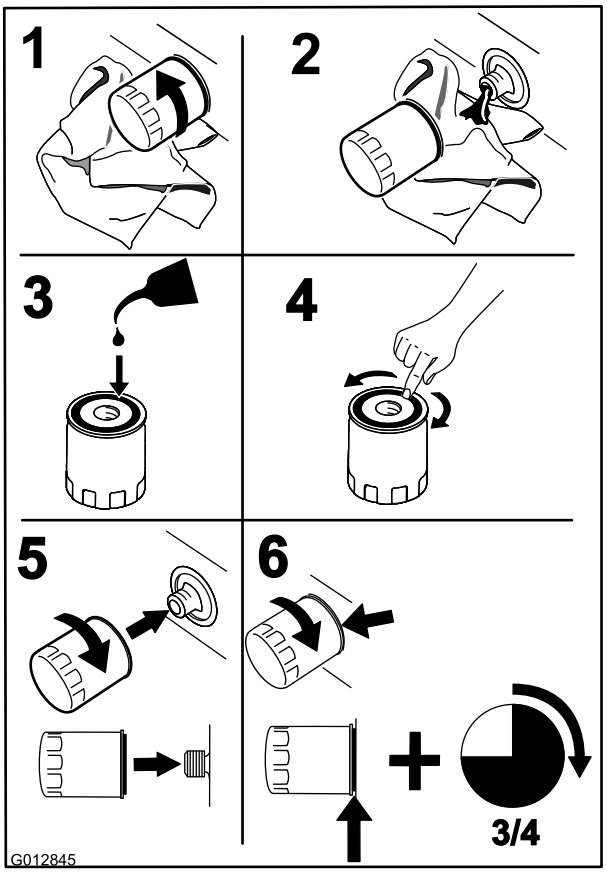

Figure 45

Note: Ensure the oil-filter gasket touches the engine and then an extra 3/4 turn is completed.

4. Fill the crankcase with the proper type of new oil; refer to Changing the Engine Oil (page 34).

Servicing the Spark Plug

Service Interval: Every 100 hours

Make sure the air gap between the center and side electrodes is correct before installing the spark plug.

Use a spark plug wrench for removing and installing the spark plug(s) and a gapping tool/feeler gauge to check and adjust the air gap. Install a new spark plug(s) if necessary.

Type for all Engines: NGK® BPR4ES or equivalent

Air Gap: 0.75 mm (0.03 inch)

Removing the Spark Plug

1. Disengage the PTO, move the motion-control levers to the neutral-locked position, and set the parking brake.
2. Stop the engine, remove the key, and wait for all moving parts to stop before leaving the operating position.
3. Remove the spark plug as shown in Figure 46.

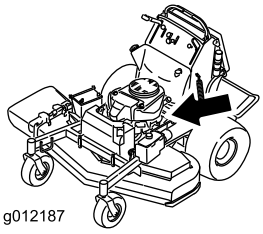

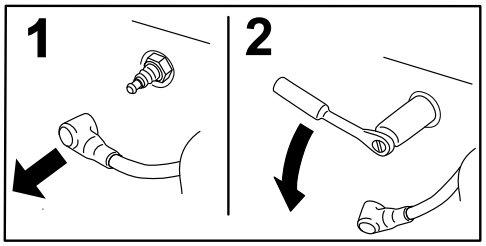

Figure 46

Checking the Spark Plug

Important: Do not clean the spark plug(s). Always replace the spark plug(s) when it has a black coating, worn electrodes, an oily film, or cracks.

If you see light brown or gray on the insulator, the engine is operating properly. A black coating on the insulator usually means the air cleaner is dirty.

Set the gap to 0.75 mm (0.03 inch).

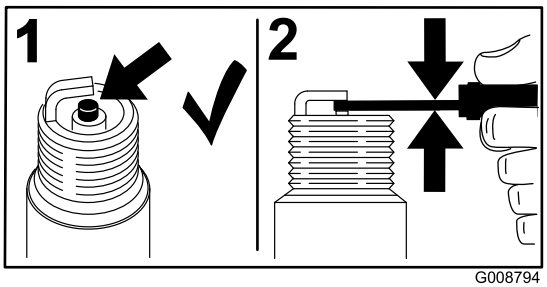

Figure 47

Installing the Spark Plug

Tighten the spark plug(s) to 22 N-m (16 ft-lb).

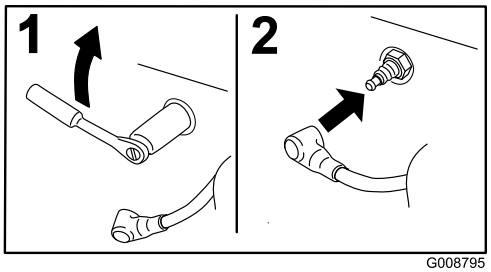

Figure 48

Checking the Spark Arrester (if equipped)

Service Interval: Every 50 hours

⚠ WARNING

Hot exhaust-system components may ignite gasoline vapors even after the engine is stopped. Hot particles exhausted during engine operation may ignite flammable materials. Fire may result in personal injury or property damage.

Do not refuel or run the engine unless the spark arrester is installed.

1. Stop the engine, wait for all moving parts to stop, engage the parking brake, and remove the key.
2. Wait for the muffler to cool.
3. If any breaks in the screen or welds are observed, replace the arrester.
4. If plugging of the screen is observed, remove the arrester, shake loose particles out of the arrester, and clean the screen with a wire brush (soak in solvent if necessary).
5. Install arrester on exhaust outlet.

Fuel System Maintenance

Draining the Fuel Tank

Note: There is no other recommended way to drain fuel from the tank, other than using a syphon pump. A syphon pump can be purchased at a hardware store.

⚠ DANGER

In certain conditions, gasoline is extremely flammable and highly explosive. A fire or explosion from gasoline can burn you and others and can damage property.

- **Drain gasoline from the fuel tank when the engine is cold. Do this outdoors in an open area. Wipe up any gasoline that spills.**
- **Never smoke when draining gasoline, and stay away from an open flame or where a spark may ignite the gasoline fumes.**

1. Park the machine on a level surface, disengage the power-take off (PTO), set the parking brake, turn the ignition key to **Off**, and remove the key.
2. Clean around the fuel cap to prevent debris from getting into the fuel tank (Figure 50).
3. Remove the fuel cap.
4. Insert a syphon pump into the fuel tank.
5. Using the syphon pump, drain the fuel into a clean gas can (Figure 49).
6. Wipe up any spilled fuel.

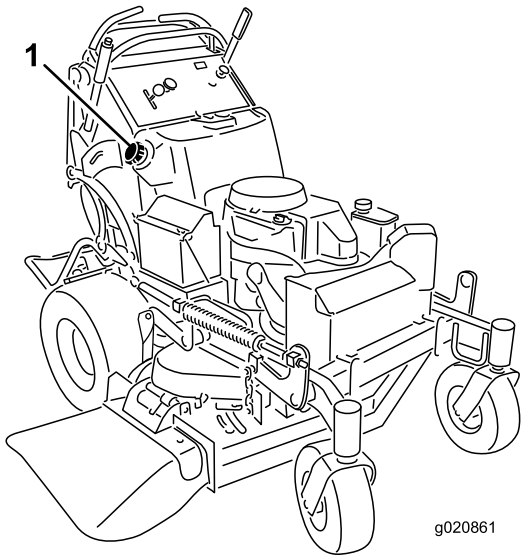

Figure 49

1. Fuel cap

Servicing the Fuel Filter

Replacing the Fuel Filter

Service Interval: Yearly

Never install a dirty filter if it is removed from the fuel line.

Note: The fuel filter is installed in order to install the new filter correctly.

Note: Wipe up any spilled fuel.

1. Disengage the PTO and set the parking brake.
2. Stop the engine, remove the key, and wait for all moving parts to stop before leaving the operating position.
3. Close fuel-shutoff valve.
4. Squeeze the ends of the hose clamps together and slide them away from the filter (Figure 50).

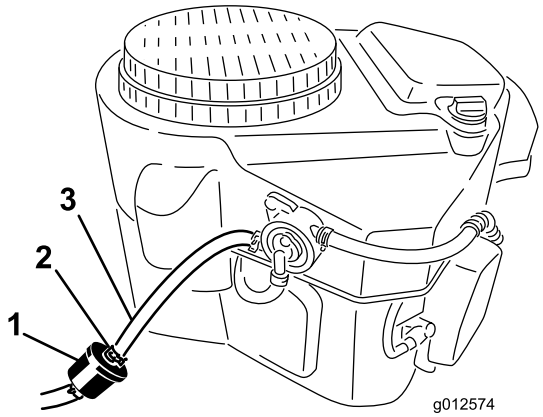

Figure 50

1. Fuel filter
2. Hose clamp
3. Fuel line

5. Remove the filter from the fuel lines.
6. Install a new filter and move the hose clamps close to the filter.
7. Open the fuel-shutoff valve.
8. Check for fuel leaks and repair if needed.
9. Wipe up any spilled fuel.

Electrical System Maintenance

Servicing the Battery

Service Interval: Every 100 hours

Always keep the battery clean and fully charged. Use a paper towel to clean the battery case. If the battery terminals are corroded, clean them with a solution of four parts water and one part baking soda. Apply a light coating of grease to the battery terminals to prevent corrosion.

Voltage: 12 V

WARNING

CALIFORNIA
Proposition 65 Warning

Battery posts, terminals, and related accessories contain lead and lead compounds, chemicals known to the State of California to cause cancer and reproductive harm. Wash hands after handling.

⚠ DANGER

Battery electrolyte contains sulfuric acid which is a deadly poison and causes severe burns.

Do not drink electrolyte and avoid contact with skin, eyes or clothing. Wear safety glasses to shield your eyes and rubber gloves to protect your hands.

Removing the Battery

⚠ WARNING

Battery terminals or metal tools could short against metal machine components causing sparks. Sparks can cause the battery gasses to explode, resulting in personal injury.

- **When removing or installing the battery, do not allow the battery terminals to touch any metal parts of the machine.**
- **Do not allow metal tools to short between the battery terminals and metal parts of the machine.**

⚠ WARNING

Incorrect battery cable routing could damage the machine and cables causing sparks. Sparks can cause the battery gasses to explode, resulting in personal injury.

- **Always Disconnect the negative (black) battery cable before disconnecting the positive (red) cable.**
- **Always Reconnect the positive (red) battery cable before reconnecting the negative (black) cable.**

1. Disengage the PTO and set the parking brake.
2. Stop the engine, remove the key, and wait for all moving parts to stop before leaving the operating position.
3. Disconnect the negative battery cable from the negative (-) battery terminal (Figure 51).
4. Slide the red terminal boot off the positive (red) battery terminal.
5. Remove the positive (red) battery cable (Figure 51).
6. Remove the battery hold down plate (Figure 51), and remove the battery.

Installing the Battery

1. Place the battery onto the machine (Figure 51).
2. Secure the battery with the hold down plate, the j-bolts, and the locknuts.
3. Install the positive (red) battery cable to positive (+) battery terminal with a nut, a washer, and a bolt (Figure 51). Slide the rubber cover over the post.
4. Install the negative battery cable and ground wire to the negative (-) battery terminal with a nut, a washer, and a bolt (Figure 51).

   Note: The battery cables will crossover each other when they are correctly installed (Figure 51).

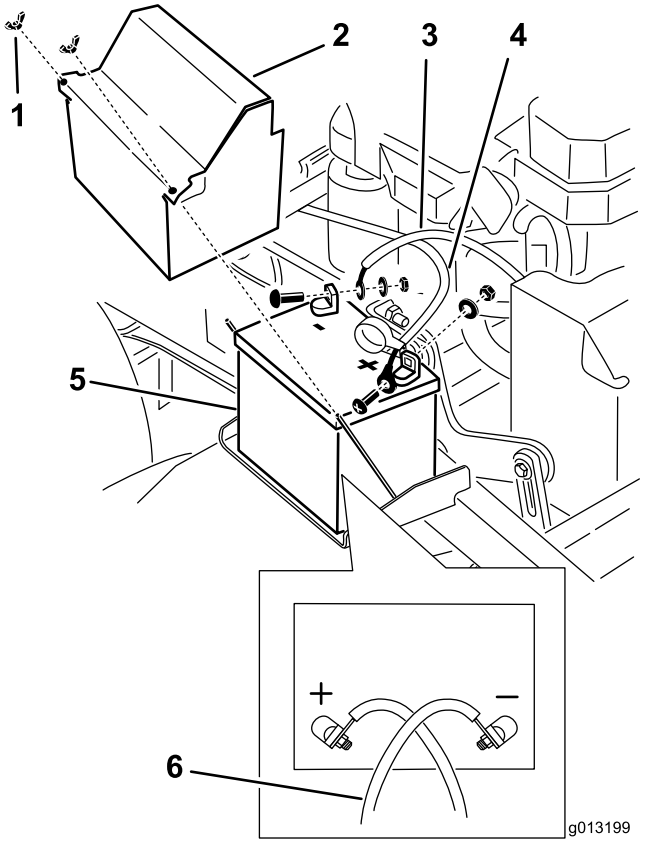

Figure 51

1. Wing nut
2. Battery cover
3. Negative (–) battery cable
4. Positive (+) battery cable
5. Battery
6. The battery cables cross when installed correctly

Charging the Battery

⚠ WARNING

Charging the battery produces gasses that can explode.

Never smoke near the battery and keep sparks and flames away from battery.

Important: Always keep the battery fully charged (1.265 specific gravity) to prevent battery damage when the temperature is below 32°F (0°C).

1. Remove the battery from the chassis; refer to Removing the Battery (page 38).
2. Check the electrolyte level.
3. Ensure that the filler caps are installed on the battery.
4. Charge the battery for 1 hour at 25 to 30 amps or 6 hours at 4 to 6 amps.
5. When the battery is fully charged, unplug the charger from the electrical outlet, and disconnect the charger leads from the battery posts (Figure 52).
6. Install the battery onto the machine and connect the battery cables; refer to Installing the Battery (page 38).

Note: Do not run the machine with the battery disconnected; electrical damage may occur.

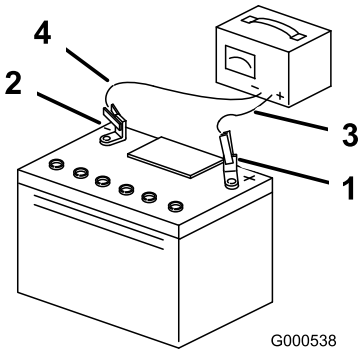

Figure 52

1. Positive Battery Post
2. Negative Battery Post
3. Red (+) Charger Lead
4. Black (-) Charger Lead

Servicing the Fuses

The electrical system is protected by fuses. It requires no maintenance. If a fuse blows, check the component or circuit for a malfunction or short.

1. Release the operator cushion from the rear of the machine.
2. Pull out on the fuse to remove and replace it (Figure 53).
3. Install the operator cushion.

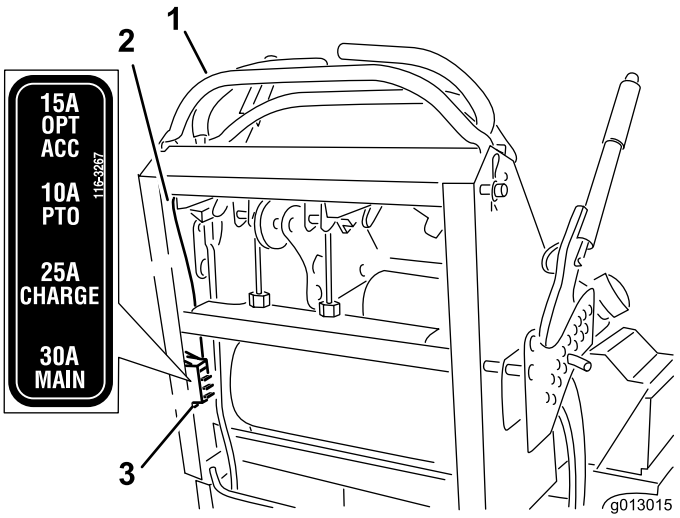

Figure 53

1. Controls
2. Wire
3. Fuses

Drive System Maintenance

Adjusting the Tracking

Note: Determine the left and right sides of the machine from the normal operating position.

1. Push both control levers forward the same distance.
2. Check if the machine pulls to one side.

   Note: If it does, stop the machine and set the parking brake.
3. Release the cushion from the rear of the machine.
4. Rotate the right cable adjustment to position the right motion control in the center of the control panel neutral-lock slot (Figure 55).

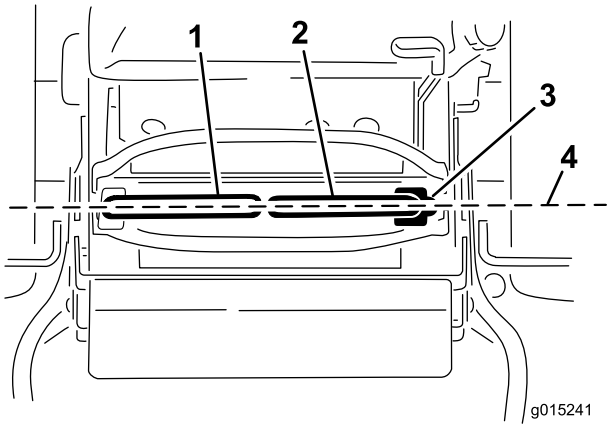

Figure 54

1. Left motion-control lever
2. Right motion-control lever
3. Neutral-locked position
4. Align the control levers front to back

5. Rotate the left cable adjustment to match the left wheel speed to the previously set right wheel speed.
6. Adjust in quarter-turn increments until the machine tracks straight.

   Note: Only adjust the left cable to match the left wheel speed to the right wheel speed. Do not adjust the right wheel speed as this will position the right motion-control lever out of the center for the control panel neutral-lock slot.

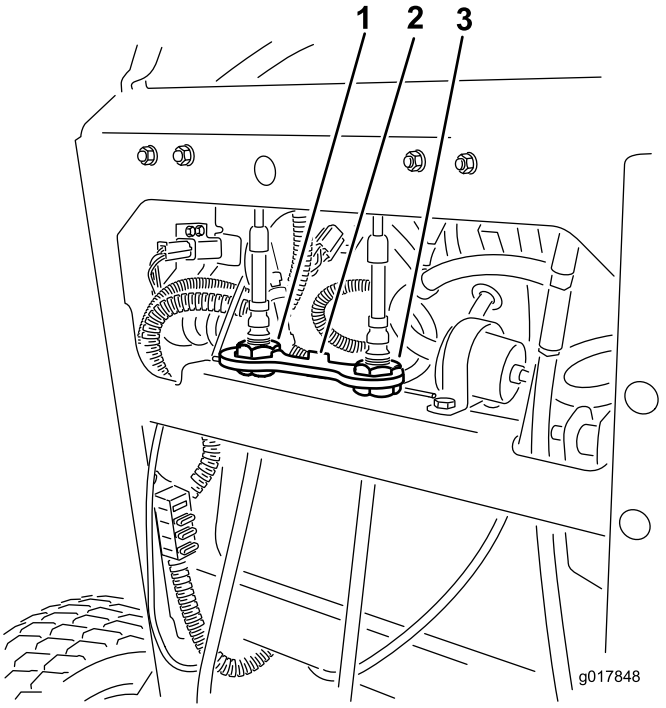

Figure 55

1. Left cable adjustment
2. Cable lock
3. Right cable adjustment

7. Check for proper tracking.

   Note: If the machine will not start after adjusting the tracking, make sure proximity switch target aligns with bolt attached to motion-control lever; refer to Adjusting the Proximity Switch (page 40).
8. Repeat the cable adjustment until the tracking is correct.
9. Check that the machine does not creep from neutral with the park brakes disengaged.

Important: Do not rotate the linkage too far, as this may cause the machine to creep in neutral.

Adjusting the Proximity Switch

Use this procedure if the machine will not start after adjusting the tracking.

1. Ensure that the bolt attached to the motion-control lever aligns with the proximity switch target (Figure 56).
2. If needed, loosen the bolts and adjust the proximity switch until the target aligns with the bolt attached to the motion-control lever (Figure 56).
3. Check the distance of the bolt to the proximity switch; it needs to be between 0.51 to 1.02 mm (0.02 to 0.04 inches) as shown in Figure 56.
4. If adjustment is needed, loosen the jam nut and adjust the bolt to the correct distance.
5. Tighten the jam nut after adjusting the bolt (Figure 56).
6. Test the safety-interlock system before operation.

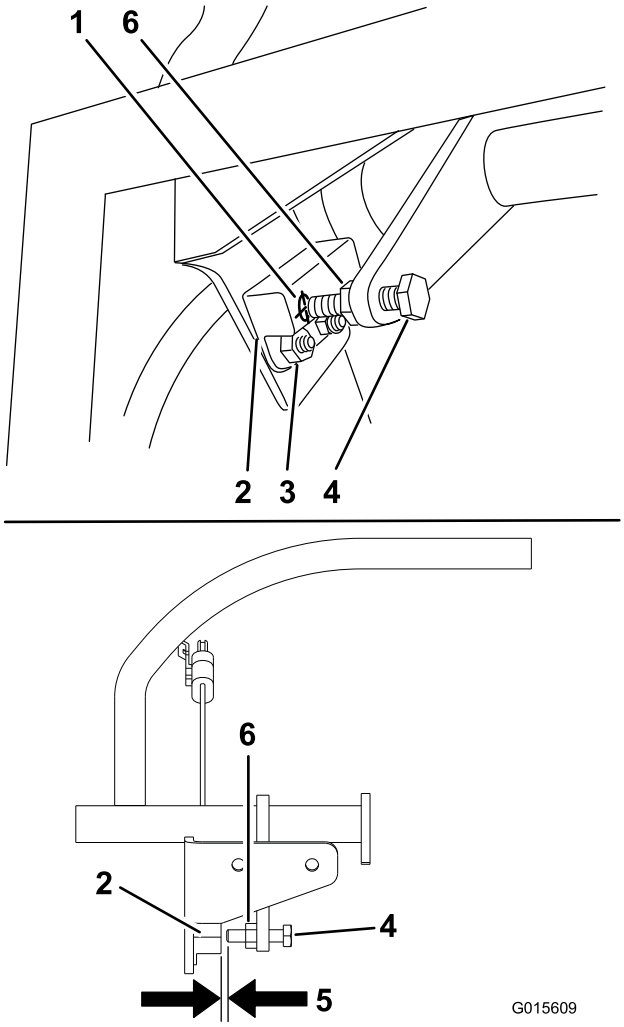

Figure 56

1. Proximity switch target
2. Proximity switch
3. Bolts and nuts
4. Bolt attached to the motion-control lever
5. Distance between 0.51 to 1.02 mm (0.02 to 0.04 inches) is needed
6. Jam nut

Checking the Tire Pressure

Service Interval: Every 50 hours/Monthly (whichever comes first)

Maintain the air pressure in the rear tires at 83 to 97 kPa (12 to 14 psi).

Important: Uneven tire pressure can cause an uneven cut.

Note: The front tires are semi-pneumatic tires and do not require air-pressure maintenance.

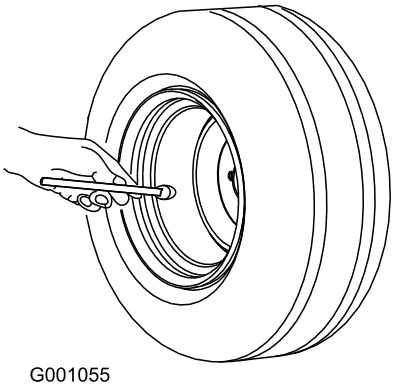

Figure 57

Adjusting the Caster-Pivot Bearing

Service Interval: Every 500 hours/Yearly (whichever comes first)

1. Disengage the blade-control switch (PTO), move the motion control levers to the neutral-locked position, and set the parking brake.
2. Stop the engine, remove the key, and wait for all moving parts to stop before leaving the operating position.
3. Remove the dust cap from the caster and tighten the lock nut (Figure 58).
4. Tighten the locknut until the spring washers are flat, and then back off a 1/4 turn to properly set the preload on the bearings (Figure 58).

   Important: Make sure that the spring washers are installed correctly as shown in Figure 58.
5. Install the dust cap (Figure 58).

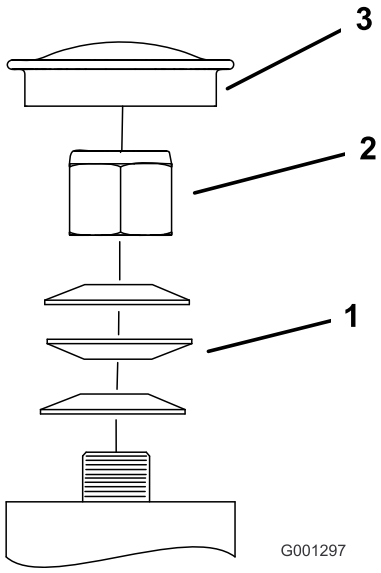

Figure 58

1. Spring washers
2. Locknut
3. Dust cap

Adjusting the Electric Clutch

Service Interval: Every 100 hours—Check the electric clutch.

The clutch is adjustable to ensure proper engagement and proper braking.

1. Insert a 0.4 to 0.5 mm (0.01 to 0.02 inches) feeler gauge through one inspection slot in the side of the assembly.

   Note: Make sure it is between the armature and the rotor friction surfaces.

   Note: The gap needs to be at least 0.4 mm (0.02 inches) and not more than 0.5 mm (0.02 inches).

2. If adjustment is needed, use a 0.4 mm (0.02 inches) feeler gauge to set each of the 3 adjustment-slot positions.
3. Tighten the locknuts until there is slight binding on the feeler gauge, but it can be moved easily within the air gap (Figure 59).
4. Repeat this for the remaining slots.
5. Check each slot again and make slight adjustments until the feeler gauge between the rotor and armature with very slight contact between them.

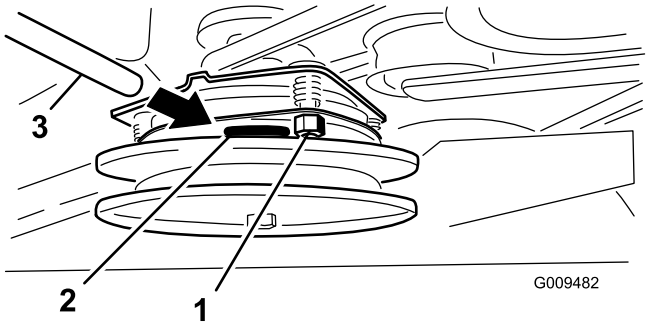

Figure 59

1. Adjusting nut
2. Slot
3. Feeler gauge

Cooling System Maintenance

Cleaning the Air-Intake Screen

Service Interval: Before each use or daily

Before each use, remove any buildup of grass, dirt, or other debris from the cylinder and cylinder head cooling fins, air intake screen on the flywheel end, and the carburetor-governor levers and linkage. This will help ensure adequate cooling and correct engine speed, and will reduce the possibility of overheating or mechanical damage to the engine.

Cleaning the Cooling System

Service Interval: Every 100 hours—Check and clean engine cooling fins and shrouds.

1. Disengage the PTO and set the parking brake.
2. Stop the engine, remove the key, and wait for all moving parts to stop before leaving the operating position.
3. Remove the air-intake screen and the fan housing (Figure 60).
4. Clean the debris and grass from the engine parts.
5. Install the air-intake screen and fan housing (Figure 60).

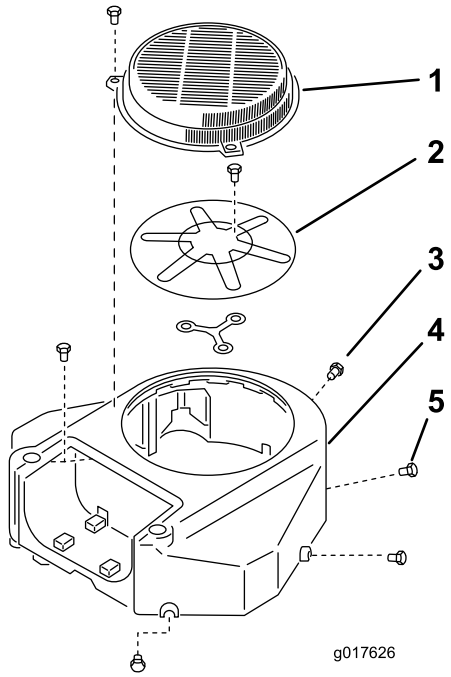

Figure 60

1. Guard
2. Engine air-intake screen
3. Bolt
4. Fan housing
5. Screw

Brake Maintenance

Servicing the Brake

Before each use, check brakes on both a level surface and slope.

Always set the parking brake when you stop the machine or leave it unattended. If the parking brake does not hold securely, an adjustment is required.

Checking the Parking Brake

Service Interval: Before each use or daily

Important: Ensure that the mower is on a level surface when checking and adjusting the brake.

1. Park the machine on a level surface and disengage the PTO.
2. Stop the engine, remove the key, and wait for all moving parts to stop before leaving the operating position.
3. Release the parking brake; refer to Releasing the Parking Brake (page 16).
4. Check the tire pressure; refer to Checking the Tire Pressure (page 41).
5. With the brake released, measure the distance between the brake bar and the tire on each side.
6. Using the side with the smallest clearance, ensure that the distance is between 3 and 6 mm (1/8 and 1/4 inches) as shown in Figure 61); refer to Adjusting the Brakes (page 44) when adjustment is needed.

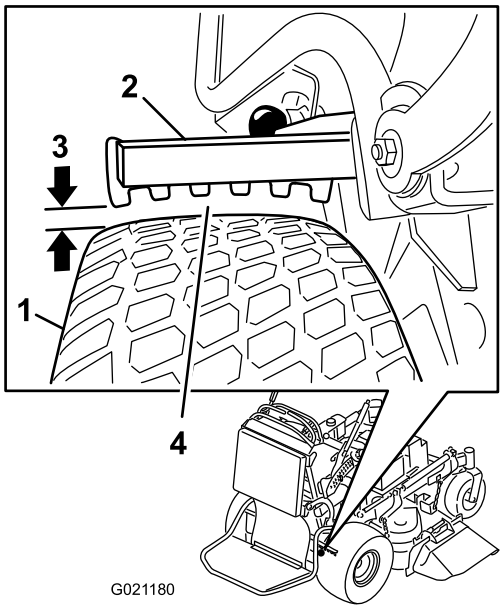

Figure 61

1. Tire
2. Brake bar
3. Clearance between 3 and 6 mm (1/8 and 1/4 inches)
4. Measure smallest clearance between bar and tire

Adjusting the Brakes

If the gap between the brake bar and tire is not correct, an adjustment is required.

1. Park the machine on a level surface and disengage the PTO, and set the parking brake.
2. Stop the engine, remove the key, and wait for all moving parts to stop before leaving the operating position.
3. Release the parking brake; refer to Releasing the Parking Brake (page 16).
4. To adjust the brake, remove clevis pin and hairpin-cotter pin from the lower-brake lever and yoke (Figure 62).
5. Adjust the yoke (Figure 61).

   Note: The distance between the brake bar and the tire needs be between 3 and 6 mm (1/8 and 1/4 inches).

   Note: To tighten the brake, rotate the yoke up.

   Note: To loosen the brake, rotate the yoke down.
6. Check the brake operation again; refer to Checking the Parking Brake (page 43).
7. Secure the yoke to the lower-brake lever with the clevis pin and hairpin-cotter pin (Figure 62).

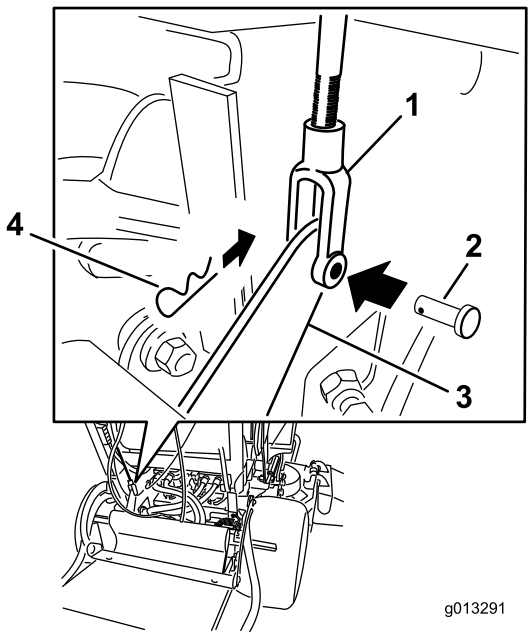

Figure 62

1. Yoke
2. Clevis pin
3. Lower-brake lever
4. Hairpin-cotter pin

Belt Maintenance

Checking the Belts

Service Interval: Every 100 hours—Check the pump-drive belt.

Every 100 hours—Check the mower-deck belt(s).

Check belts for cracks, frayed edges, burn marks, wear, signs of overheating or any other damage.

The signs of a worn mower belt are squealing while the belt is rotating, blades slipping while you are cutting grass, frayed belt edges, burn marks, and cracks. Replace the mower belt if you detect any of these signs.

Replacing the Mower-Deck Belt for 36-inch Mowers

Important: The fasteners on the covers of this machine are designed to remain on the cover after removal. Loosen all of the fasteners on each cover a few turns so that the cover is loose but still attached, then go back and loosen them until the cover comes free. This will prevent you from accidentally stripping the bolts free of the retainers.

1. Disengage the PTO and set the parking brake.
2. Stop the engine, remove the key, and wait for all moving parts to stop before leaving the operating position.
3. Loosen the bolts and remove the right belt cover with the bolt attached to it.
4. Remove the spring from the anchor post on the idler-pulley arm (Figure 63).
5. Remove the worn mower belt (Figure 63).
6. Install the new mower belt around the clutch pulley, the deck pulleys, and the idler pulley (Figure 63).
7. Install the spring onto the anchor post on the idler-pulley arm (Figure 63).
8. Install the belt cover onto the cutting unit and secure the bolt.

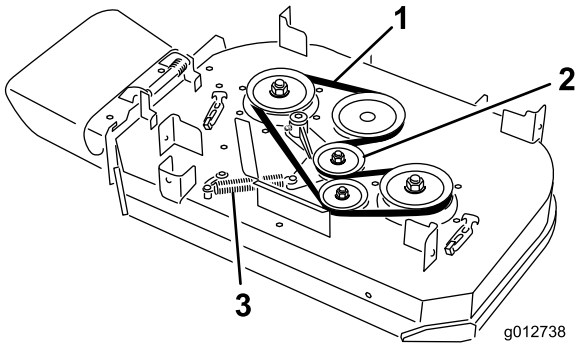

Figure 63

1. Belt
2. Spring-loaded idler pulley
3. Spring

Replacing the Mower-Deck Belts for 40-inch Mowers

Important: The fasteners on the covers of this machine are designed to remain on the cover after removal. Loosen all of the fasteners on each cover a few turns so that the cover is loose but still attached, then go back and loosen them until the cover comes free. This will prevent you from accidentally stripping the bolts free of the retainers.

Replacing the Right Mower-Deck Belt

1. Disengage the PTO and set the parking brake.
2. Stop the engine, remove the key, and wait for all moving parts to stop before leaving the operating position.
3. Loosen the bolts and remove the belt covers with the bolts attached to them.
4. Remove the spring from the anchor post on the idler-pulley arm (Figure 63).
5. Remove the worn mower belt (Figure 63).
6. Install the new mower belt around the deck pulleys and idler pulley (Figure 63).
7. Install the spring onto the anchor post on the idler-pulley arm (Figure 63).
8. Install the belt covers onto the cutting unit and secure the bolts.

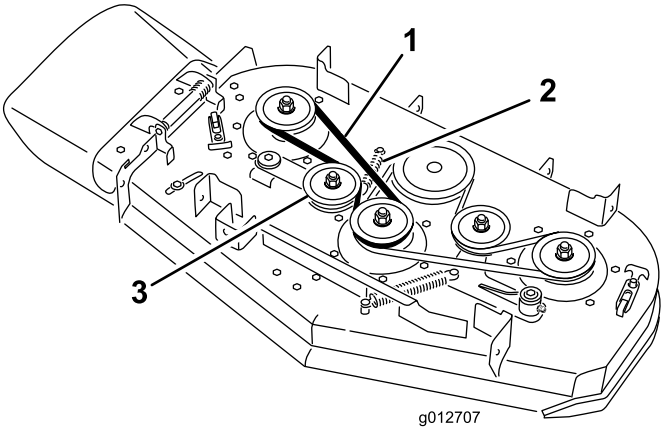

Figure 64

1. Belt
2. Spring
3. Spring-loaded idler pulley

Replacing the Left Mower-Deck Belt

1. Disengage the PTO and set the parking brake.
2. Stop the engine, remove the key, and wait for all moving parts to stop before leaving the operating position.
3. Loosen the bolts and remove the belt covers with the bolts attached to them.
4. To remove the left mower belt, the right mower belt needs to be removed first; refer to (page).
5. Remove the spring from the anchor post on the idler-pulley arm (Figure 63).
6. Remove the worn mower belt (Figure 63).
7. Install the new mower belt around the deck pulleys, the clutch pulley, and the idler pulley (Figure 63).
8. Install the spring onto the anchor post (Figure 63).
9. Install the right mower belt; refer to (page).
10. Install the belt covers onto the cutting unit and secure the bolts.

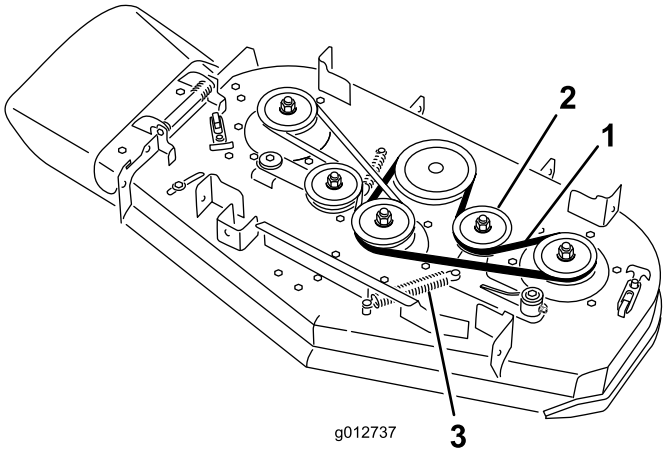

Figure 65

1. Belt
2. Spring-loaded idler pulley
3. Spring

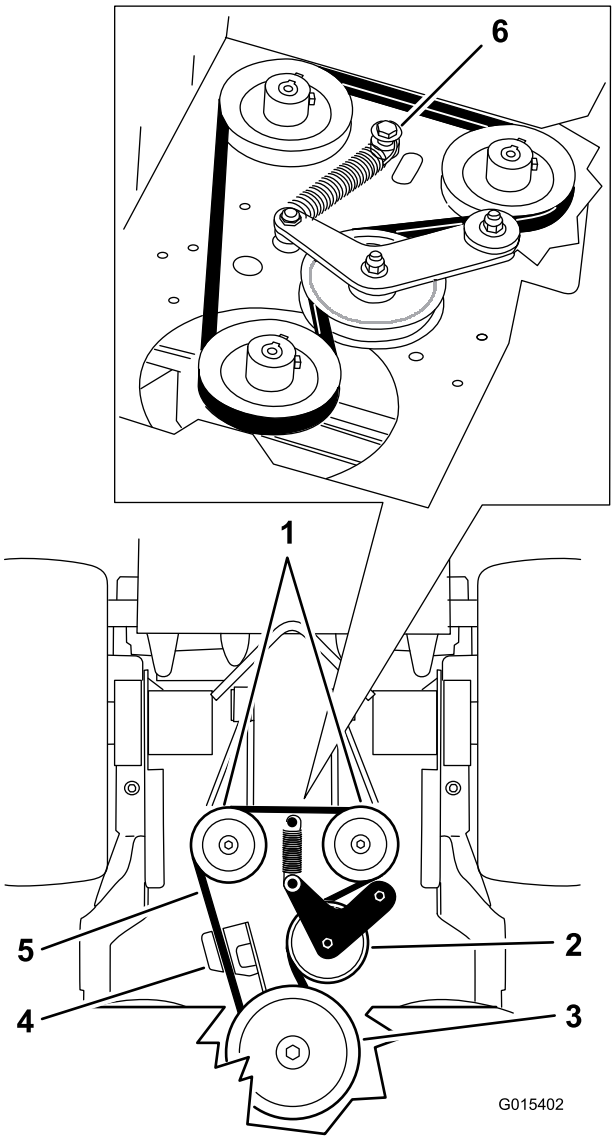

Figure 66

1. Hydraulic pumps
2. Idler pulley
3. Clutch pulley
4. Clutch retainer
5. Pump-drive belt
6. Shoulder bolt, nut, and washer

Replacing the Pump-Drive Belt

Service Interval: Every 100 hours—Check the pump-drive belt.

1. Disengage the PTO and set the parking brake.
2. Stop the engine, remove the key, and wait for all moving parts to stop before leaving the operating position.
3. Remove the mower-deck belt.
4. Tilt the machine; refer to Raising the Mower for Access (page 28).
5. Remove the shoulder bolt, the nut, and the washer from the engine deck and connected spring (Figure 66).
6. Remove the pump-drive belt (Figure 66).
7. Install the new belt around the clutch and the 2 pump pulleys.
8. Install the spring onto the shoulder bolt and washer, and connect it to the engine deck with the nut (Figure 66).
9. Lower the machine to the operating position.
10. Install the mower-deck belt.

Adjusting the Motion-Control-Handle Positions

Adjusting the Right Side Motion-Control Lever

If the motion-control levers do not align horizontally, adjust the right side motion-control lever.

Note: Adjust the horizontal alignment before the front to back alignment.

1. Disengage the PTO, move the right side motion-control lever to the neutral position, and set the parking brake.
2. Stop the engine, remove the key, and wait for all moving parts to stop before leaving the operating position.
3. Push the right motion-control lever down out of the neutral-locked position (Figure 67).
4. Check if the right motion-control lever aligns horizontally with the left motion-control lever (Figure 67).

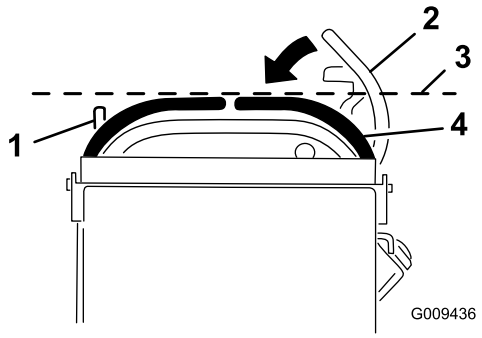

Figure 67

1. Left motion-control lever
2. Right motion-control lever in the neutral-locked position
3. Check the horizontal alignment here
4. Right motion-control lever

5. To adjust the right motion-control lever horizontally, the cam needs to be adjusted.
6. Release the cushion from the rear of the machine.
7. Loosen the nut holding the cam (Figure 68).

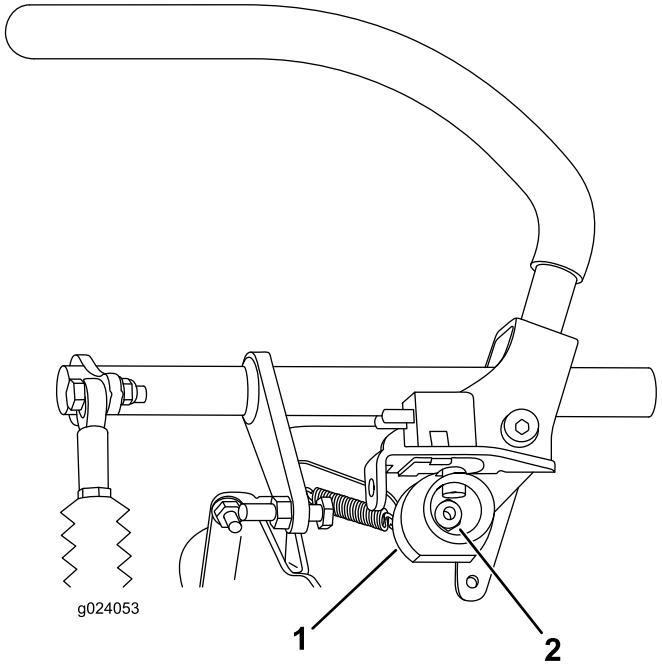

Figure 68

1. Cam
2. Nut

8. Adjust the cam until it aligns with the left motion-control lever and tighten the nut for the cam.

   Note: Moving the cam clockwise (in the vertical position) lowers the handle, while moving it counterclockwise (in the vertical position) raises the handle.

   Important: Ensure that the flat portion of the cam does not go above a vertical position (right or left), or you may cause damage to the switch.

Adjusting the Neutral Position for the Motion-Control Levers

Important: Ensure the tracking of the mower is correct after adjusting the motion-control levers. Adjusting the tracking and aligning the motion-control levers front to back is the same procedure (Figure 69).

Note: Adjust the horizontal alignment before the front to back alignment.

If the motion-control levers do not align front to back, or the right side control lever does not move easily into the neutral-lock position, adjustment is required.

1. After the horizontal alignment is finished, check the front to back alignment by slightly pushing the control levers forward to take up any slack in the linkage for the control levers (Figure 69).

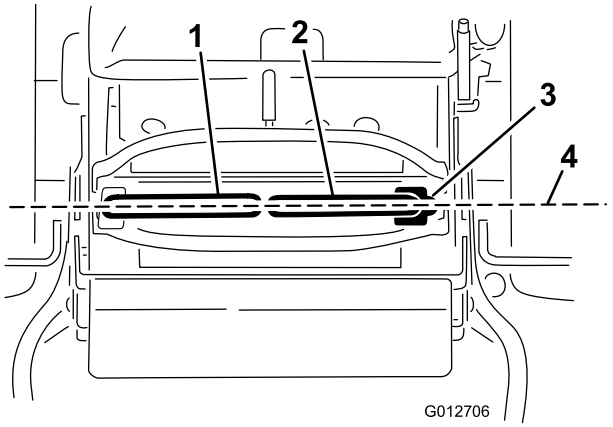

Figure 69

1. Left motion-control lever
2. Right motion-control lever
3. Neutral-locked position
4. Align the control levers front to back

2. Ensure the right motion-control lever moves easily into the neutral-lock position.

   Note: Turn the cable adjustment clockwise to move the motion-control handle forward. Turn the cable adjustment counterclockwise to move the motion-control handle rearward.

3. Rotate the cable adjustment on right side when adjustment is needed.

   Note: Adjust the cable adjustment in quarter-turn increments.

4. After the right motion-control lever moves easily into the neutral-lock position, adjust the left motion-control lever to align with the right motion-control lever.

5. Check for proper tracking; refer to Adjusting the Tracking (page 40).

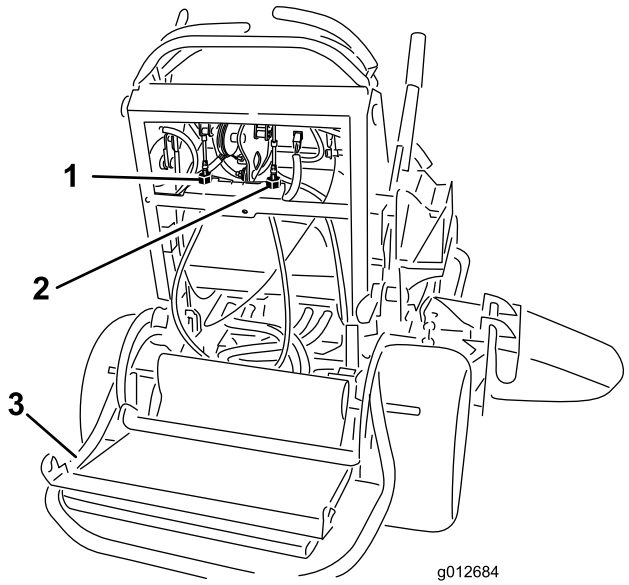

Figure 70

1. Left cable adjustment
2. Right cable adjustment
3. Platform down

Hydraulic System Maintenance

Servicing the Hydraulic System

Hydraulic Oil Type: Toro® HYPR-OIL™ 500 hydraulic oil or Mobil® 1 15W-50 synthetic motor oil.

Hydraulic System Oil Capacity: 2.0 L (67 oz)

Important: Use the specified oil or equivalent. Other fluids could cause system damage.

Checking the Hydraulic Fluid

Service Interval: After the first 8 hours

Every 50 hours

Note: There are 2 ways to check the hydraulic oil; when the oil is warm, or when the oil is cold. The baffle inside the tank has 2 levels depending if the oil is warm or cold.

1. Position the machine on a level surface.
2. Disengage the power take off (PTO) and shut off the engine.
3. Wait for all moving parts to stop before leaving the operating position and then set the parking brake.
4. Clean the area around the cap and the filler neck of the hydraulic tank (Figure 71).

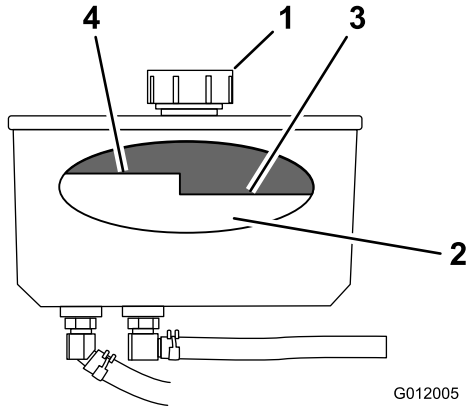

Figure 71

1. Cap
2. Baffle
3. Cold fluid level—full
4. Hot fluid level—full

5. Remove the cap from the filler neck (Figure 71).

   Note: Look inside to check the fluid level in the reservoir.
6. Add fluid to the reservoir until it reaches the cold level of the baffle.
7. Run the machine at low idle for 15 minutes to allow any air to purge out of the system and warm the fluid; refer to Starting the Engine (page 17).
8. Check the fluid level while the fluid is warm.

   Note: If required, add fluid to the reservoir until it is between the hot level and the cold level.

   Note: The fluid level should be below the hot level of the baffle when the fluid is warm (Figure 71).
9. Install the cap on the filler neck.

⚠ WARNING

Hydraulic fluid escaping under pressure can penetrate skin and cause injury.

- **If hydraulic fluid is injected into the skin, it must be surgically removed within a few hours by a doctor familiar with this type of injury. Gangrene may result if this is not done.**
- **Keep your body and hands away from pinhole leaks or nozzles that eject high-pressure hydraulic fluid.**
- **Use cardboard or paper to find hydraulic leaks.**
- **Safely relieve all pressure in the hydraulic system before performing any work on the hydraulic system.**
- **Make sure all hydraulic-fluid hoses are in good condition, and all that the hydraulic connections and fittings are tight before applying pressure to hydraulic system.**

Replacing the Hydraulic Fluid

Service Interval: Every 250 hours—Change the hydraulic oil when using Mobil® 1 oil.

Every 500 hours—Change the hydraulic oil when using Toro® HYPR-OIL™ 500 hydraulic oil.

⚠ WARNING

Hot hydraulic fluid can cause severe burns.

Allow the hydraulic fluid to cool before performing any maintenance to the hydraulic system.

1. Disengage the PTO and set the parking brake.
2. Stop the engine and wait for all moving parts to stop before leaving the operating position.
3. Remove hydraulic-reservoir cap.
4. Locate the front hydraulic hose under the hydraulic tank and place a drain pan under the tank (Figure 72).
5. Loosen the hose clamp and move it down the hose.
6. Remove the front hydraulic hose and allow the fluid to run out of the tank.

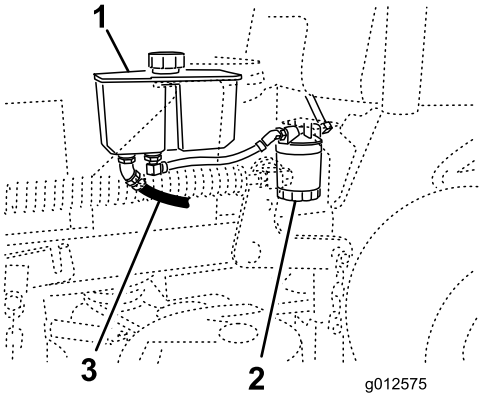

Figure 72

1. Hydraulic tank
2. Hydraulic filter
3. Front hydraulic hose

7. Change the hydraulic filter; refer to Replacing the Hydraulic Filter (page 50).
8. Connect the hydraulic hose under the tank.
9. Add fluid to the tank until it reaches the cold baffle of the tank.

   Important: Use the specified oil or equivalent. Other fluids could cause system damage.

10. Install the hydraulic-tank cap.
11. Start engine and let run for about 2 minutes to purge air from the system.
12. Stop the engine and check for leaks.

    Note: If one or both wheels will not drive, refer to Bleeding the Hydraulic System (page 51).

13. Check the level of the fluid and add fluid, if required. **Do not overfill.**

Replacing the Hydraulic Filter

Service Interval: After the first 8 hours

Every 500 hours/Yearly (whichever comes first)

⚠ WARNING

Hot hydraulic fluid can cause severe burns.

Allow the hydraulic fluid to cool before performing any maintenance to the hydraulic system.

1. Disengage the PTO and set the parking brake.
2. Stop the engine and wait for all moving parts to stop before leaving the operating position.

   Important: Do not substitute automotive oil filter, or severe hydraulic system damage may result.

3. Locate the filter and place a drain pan under the filter (Figure 73).

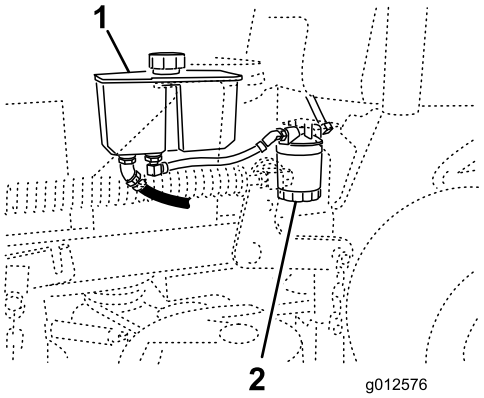

Figure 73

1. Hydraulic tank
2. Hydraulic filter

4. Remove the old filter and wipe the filter-adapter gasket surface clean (Figure 74).
5. Apply a thin coat hydraulic fluid to the rubber gasket on the replacement filter.
6. Install replacement hydraulic filter onto the filter adapter.
7. Turn the oil filter clockwise until the rubber gasket contacts the filter adapter, and tighten the filter an additional 1/2 turn (Figure 74).

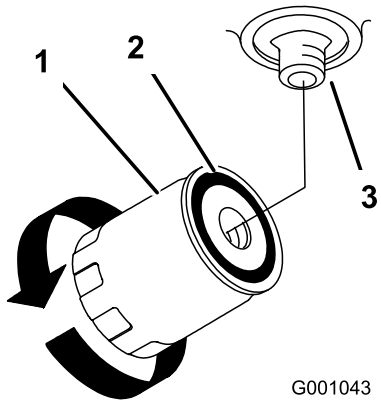

Figure 74

1. Hydraulic filter
2. Gasket
3. Adapter

8. Clean up any spilled fluid.
9. Check the fluid in the reservoir, and add fluid to the tank until it reaches the cold baffle of the tank.

   Important: Use the specified oil or equivalent. Other fluids could cause system damage.
10. Start engine and let run for about 2 minutes to purge air from the system.
11. Stop the engine and check for leaks.

    Note: If one or both wheels will not drive, refer to Bleeding the Hydraulic System (page 51).
12. Check the level and add fluid, if required. **Do not overfill.**

Bleeding the Hydraulic System

The traction system is self-bleeding, however, it may be necessary to bleed the system if fluid is changed or after work is performed on the system.

1. Disengage the PTO and set the parking brake.
2. Stop the engine and wait for all moving parts to stop before leaving the operating position.
3. Raise the rear of the machine onto jack stands high enough to raise the drive wheels off the ground.
4. Start the engine and move the throttle control to the idle position.

   Note: If the drive wheel does not rotate, it is possible to assist the purging of the system by carefully rotating the tire in the forward direction.
5. Check the hydraulic fluid level as it drops, and add fluid as required to maintain the proper level.
6. Repeat this procedure for the opposite wheel.
7. Thoroughly clean the area around each of the charge pump housings.

Checking the Hydraulic Lines

Service Interval: Every 100 hours

Check hydraulic hoses and hoses for leaks, loose fittings, kinked hoses, loose mounting supports, wear, general weathering, and chemical deterioration. Make any necessary repairs before operating.

Note: Keep areas around the hydraulic system clean from grass and debris buildup.

Note: Extended operating time at high temperatures in a hot climate may lead to deterioration of hoses and seals. Inspect more frequently in a hot climate, and change the hydraulic oil and filter more frequently.

Mower Deck Maintenance

Servicing the Cutting Blades

To ensure a superior quality of cut, keep the blades sharp. For convenient sharpening and replacement, you may want to keep extra blades on hand.

⚠ WARNING

A worn or damaged blade can break, and a piece of the blade could be thrown into the operator's or bystanders' area, resulting in serious personal injury or death.

- **Inspect the blades periodically for wear or damage.**
- **Replace a worn or damaged blade.**

Before Inspecting or Servicing the Blades

Park the machine on a level surface, disengage the blades and set the parking brake. Turn the ignition key to off. Remove the key, and disconnect the spark plug wires from the spark plugs.

Inspecting the Blades

Service Interval: Before each use or daily

1. Inspect the cutting edges (Figure 75).
2. If the edges are not sharp or have nicks, remove and sharpen the blade; refer to Sharpening the Blades (page 53).
3. Inspect the blades, especially in the curved area.
4. If you notice any cracks, wear, or a slot forming in this area, immediately install a new blade (Figure 75).

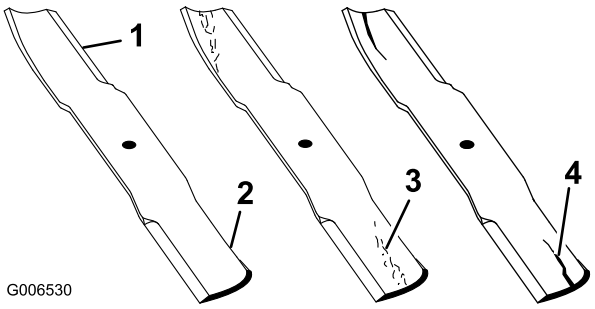

Figure 75

1. Cutting edge
2. Curved area
3. Wear/slot forming
4. Crack

Checking for Bent Blades

1. Disengage the PTO, move the motion-control levers to the neutral-locked position, and set the parking brake.
2. Stop the engine, remove the key, and wait for all moving parts to stop before leaving the operating position.
3. Rotate the blades until the ends face forward and backward.
4. Measure from a level surface to the cutting edge, position **A**, of the blades (Figure 76).

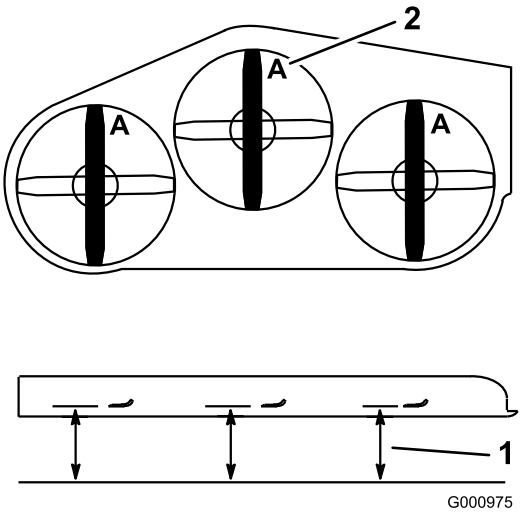

Figure 76

1. Measure here from blade to hard surface
2. Position A

5. Rotate the opposite ends of the blades forward.
6. Measure from a level surface to the cutting edge of the blades at the same position as in step 4 above.

Note: The difference between the dimensions obtained in steps 4 and 5 must not exceed 3 mm (1/8 inch).

Note: If this dimension exceeds 3 mm (1/8 inch), the blade is bent and must be replaced.

⚠ WARNING

A blade that is bent or damaged could break apart and could seriously injure or kill you or bystanders.

- **Always replace bent or damaged blade with a new blade.**
- **Do not file or create sharp notches in the edges or surfaces of the blade.**

Removing the Blades

Blades must be replaced if a solid object is hit, if the blade is out of balance, or if the blade is bent. To ensure optimum performance and continued safety conformance of the machine, use genuine Toro replacement blades. Replacement blades made by other manufacturers may result in nonconformance with safety standards.

1. Hold the blade end using a rag or a thickly-padded glove.
2. Remove the blade bolt, the curved washer, and the blade from the spindle shaft (Figure 77).

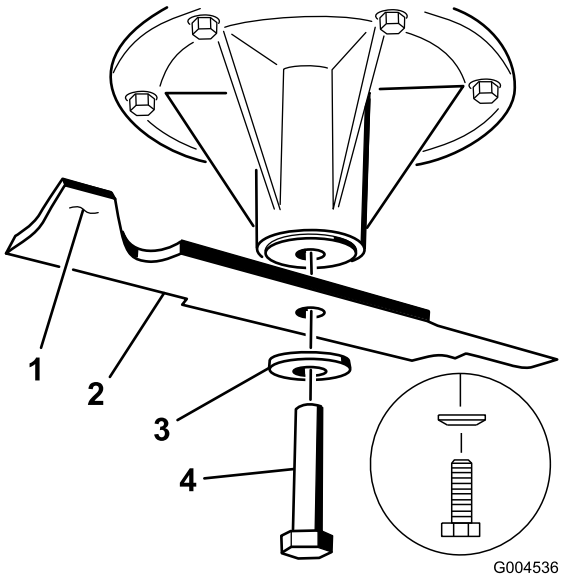

Figure 77

1. Sail area of the blade
2. Blade
3. Curved washer
4. Blade bolt

Sharpening the Blades

1. Use a file to sharpen the cutting edge at both ends of the blade (Figure 78).

   Note: Maintain the original angle.

   Note: The blade retains balance if the same amount of material is removed from both cutting edges.

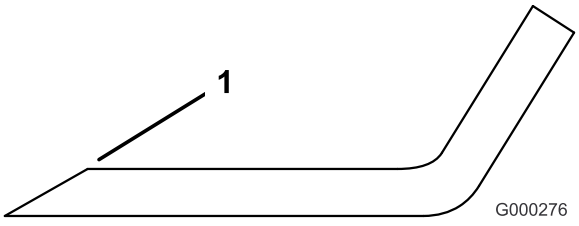

Figure 78

1. Sharpen at the original angle

2. Check the balance of the blade by putting it on a blade balancer (Figure 79).

   Note: If the blade stays in a horizontal position, the blade is balanced and can be used.

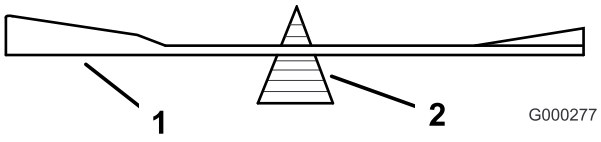

Figure 79

1. Blade
2. Balancer

3. If the blade is not balanced, file some metal off the end of the sail area only (Figure 77).
4. Repeat this procedure until the blade is balanced.

Installing the Blades

1. Install the blade onto the spindle shaft (Figure 80).

   Important: The curved part of the blade must be pointing upward toward the inside of the mower to ensure proper cutting.

2. Install the spring disk and blade bolt (Figure 80).

   Note: The spring-disk cone must be installed toward the bolt head (Figure 80).

3. Torque the blade bolt to 115 to 150 N-m (85 to 110 ft-lb).

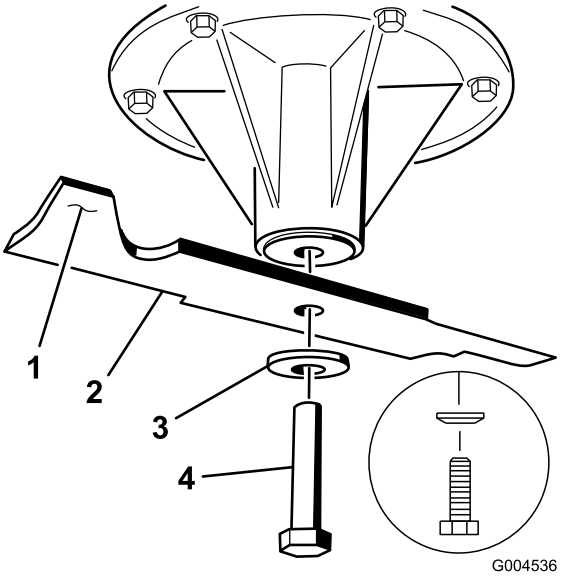

Figure 80

1. Sail area of the blade
2. Blade
3. Spring disk
4. Blade bolt

Leveling the Mower Deck

Preparing the Machine

1. Position mower on a flat surface.

2. Disengage the PTO, move the motion-control levers to the neutral-locked position, and set the parking brake.
3. Stop the engine, remove the key, and wait for all moving parts to stop before leaving the operating position.
4. Check the tire pressure of both drive tires; refer to Checking the Tire Pressure (page 41).
5. Lower the mower to the 76 mm (3 inch) height-of-cut position.

   Note: The actual cutting height will not be adjusted until the deck has been leveled; refer to Matching the Height-of-Cut (page 57).
6. Check the distance between the swivels, measure at the center of the swivels (center-to-center length) on each threaded rod. Ensure the length is 49.5 cm (19-1/2 inches) for 91 cm (36 inch) mower decks and 43.7 cm (17-3/16 inches) for 102 cm (40 inch) mower decks (Figure 81).
7. Loosen the jam nuts at the **front** swivel.
8. Using the jam nuts, adjust the length of the threaded rod to achieve the correct distance.
9. Tighten the jam nuts at the **front** swivel.

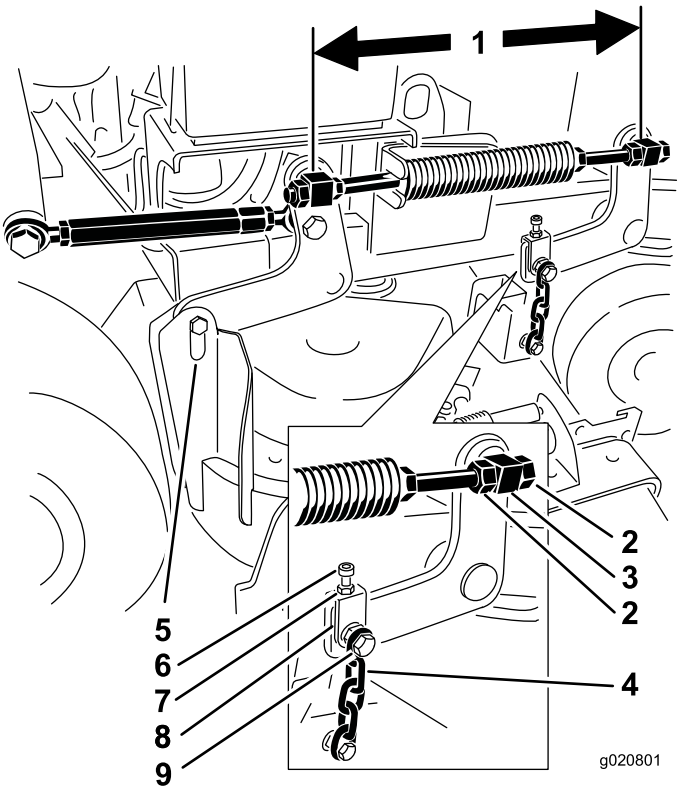

Figure 81

1. Measure here at the center of the swivels (center-to-center length)
2. Swivel-jam nuts
3. Front swivel
4. Front chain
5. Rear chain
6. Adjustment bolt
7. Jam Nut
8. Yoke
9. Upper chain bolt

10. Check the distance between the yoke and the deck hanger arm at each yoke.

    Note: This distance needs to be 11 mm (7/16 inch) as shown in Figure 82.
11. If adjustment is needed, loosen the upper chain bolt (Figure 81).
12. Loosen the jam nut and adjust the adjustment bolt to achieve the correct distance as shown in Figure 82.
13. Tighten the jam nut and the upper-chain bolt.

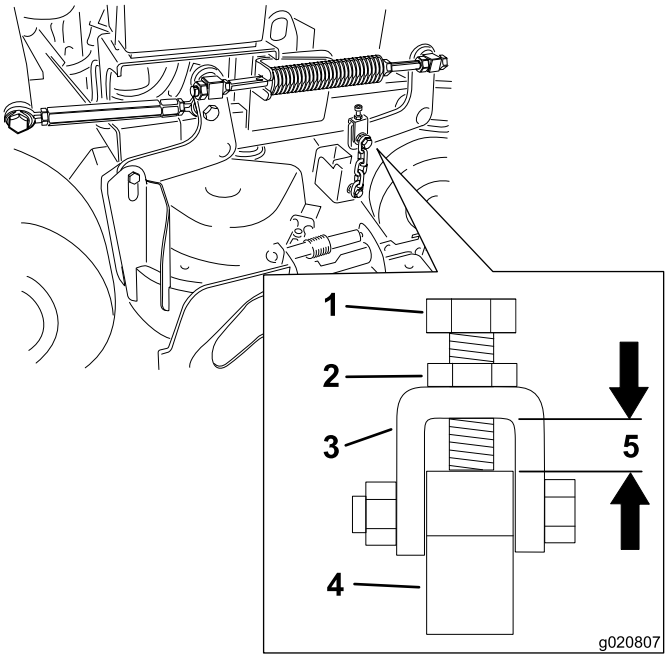

Figure 82

1. Adjustment bolt
2. Jam nut
3. Yoke
4. Deck hanger arm
5. Distance needs to be 11 mm (7/16 inch)

Adjusting the Right Side Front-to-Rear Mower Deck Pitch

1. Position the right blade front-to-rear (Figure 83).
2. Measure the right blade at the **C** location, from a level surface to the cutting edge of the blade tip and record this measurement (Figure 83).
3. Measure the right blade at the **D** location, from a level surface to the cutting edge of the blade tip and record this measurement (Figure 83).
4. The mower blade should be a 6 to 10 mm (1/4 to 3/8 inch) lower at position **C** than at position **D** (Figure 83). If it is not correct, proceed to the following steps.
5. Loosen the jam nuts at the right and left hand **front** swivels.
6. Using the right hand jam nuts, adjust the length of the right hand threaded rod to achieve the 6 to 10 mm (1/4 to 3/8 inch) front-to-rear pitch.
7. Tighten the jam nuts at the right and left hand **front** swivels.

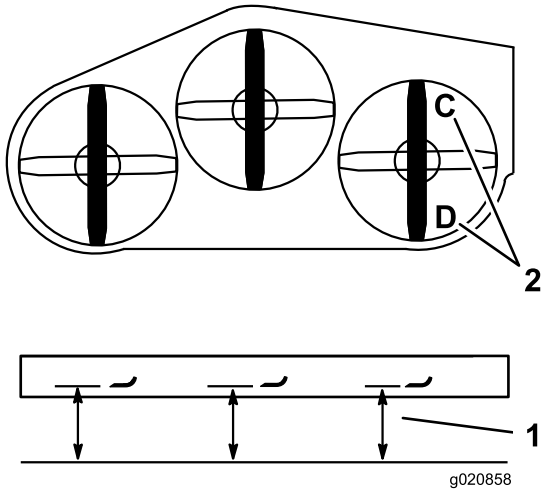

Figure 83

1. Measure here from blade to hard surface
2. Measure at C and D

Matching the Rear of the Mower Deck

1. Position the left and right blades front-to-rear.
2. Measure the left blade at the **B** location, from a level surface to the cutting edge of the blade tip and record this measurement (Figure 84).
3. Measure the right blade at the **D** location, from a level surface to the cutting edge of the blade tip and record this measurement (Figure 84).
4. The measurement at position **B** needs to be within 3 mm (1/8 inch) of the measurement at position **D**. (Figure 84). If it is not correct, proceed to the following steps.
5. Loosen the jam nuts at the left hand **front** swivel.
6. Using the left hand jam nuts, adjust the length of the left hand threaded rod until location **B** matches location **D**.
7. Tighten the jam nuts at the left hand **front** swivel.

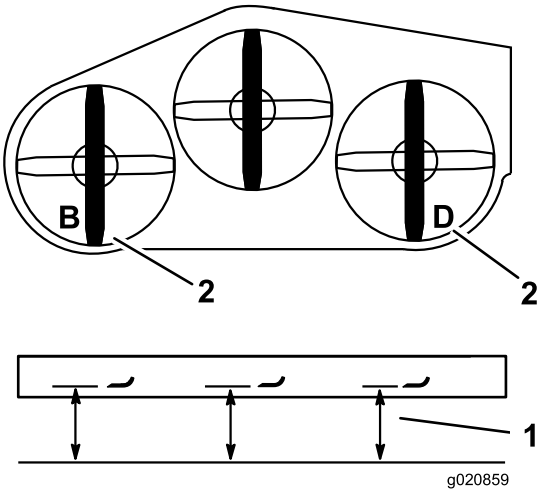

Figure 84

1. Measure here from blade to hard surface
2. Measure at B and D

Leveling the Front of the Mower Deck

1. Position the left and right blades front-to-rear.
2. Inspect the front chains, and ensure each chain has tension.

   Note: If either chain is loose, adjust the threaded rod with the loose chain to achieve tension on that chain.
3. Measure the left blade at the **A** location, from a level surface to the cutting edge of the blade tip and record this measurement (Figure 85).
4. Measure the right blade at the **C** location, from a level surface to the cutting edge of the blade tip and record this measurement (Figure 85).
5. The measurement between location **A** and **C** needs to be within 3 mm (1/8 inch). If it is not correct, proceed to the following steps.
6. Loosen the upper chain bolts (Figure 81).
7. Loosen the jam nuts on each yoke.
8. Adjust the adjustment bolts in the yokes, at locations **A** and **C** to achieve the correct height.
9. Tighten the jam nuts and upper chain bolts.

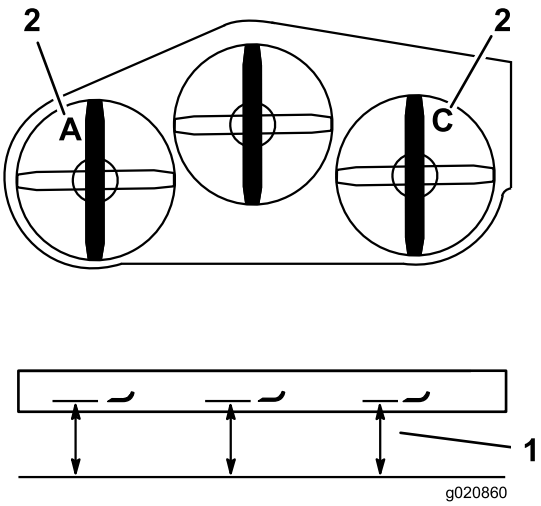

Figure 85

1. Measure here from blade to hard surface
2. Measure at A and C

Matching the Height-of-Cut

1. Lower the mower to the 76 mm (3 inches) height-of-cut position.
2. Position the right blade front-to-rear.
3. Measure the right blade at location **C**, from a level surface to the cutting edge of the blade tip and record this measurement (Figure 85).
4. The measurement at location **C** needs to be within an 3 mm (1/8 inch) of the 76 mm (3 inches) height-of-cut setting. If it is not correct, proceed to the following steps.
5. Loosen the jam nuts at both ends of the turnbuckle (Figure 86).

   Note: The end of the turnbuckle with the groove machined in it, has left-hand threads (Figure 86).
6. Adjust the turnbuckle to raise or lower the deck height to achieve 76 mm (3 inches) at location **C**.
7. Tighten the jam nuts at both ends of the turnbuckle.
8. Check and ensure the mower deck lift lever will latch into the transport position.
9. If it does not latch into the transport position, adjust the turn buckle until it will latch into the transport position.
10. Tighten the jam nuts.

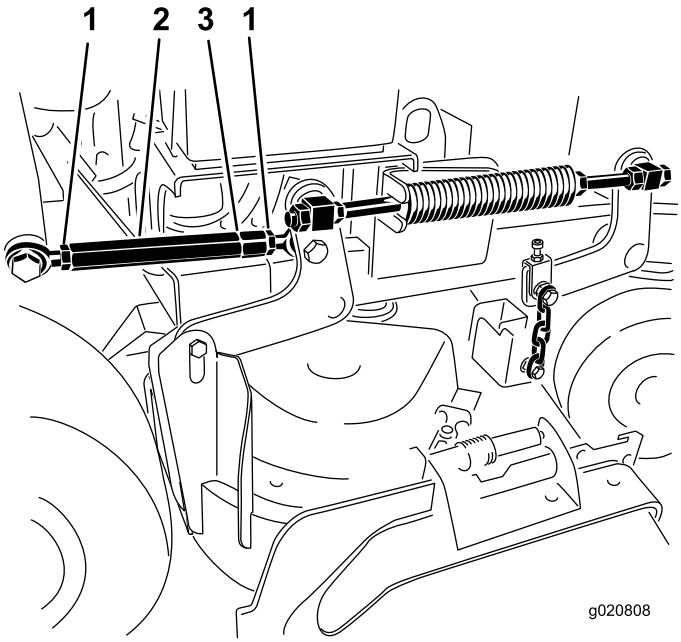

Figure 86

1. Jam nut
2. Turnbuckle
3. Groove indicating left hand threads

Adjusting the Compression Spring

Note: Adjusting the compression spring will alter how much the deck will float and how much effort it takes to lift the deck when using the height-of-cut handle.

- More spring compression will reduce the handle lift force required and cause the deck to float more.
- Less spring compression will increase the handle lift force required and cause the deck to float less.

1. Raise the deck-lift lever and lock into the transport position.
2. Check the length of the compression spring.

   Note: Nominal length is 28.2 cm (11-1/8 inches) for 91 cm (36 inch) mower decks and 25.7 cm (10-1/8 inches) for 102 cm (40 inch) mower decks (Figure 87).
3. Adjust this distance, by loosening the spring-jam nut and turning the nut in front of each spring (Figure 87).
4. Lock the nut into position by tightening the spring-jam nut (Figure 87).

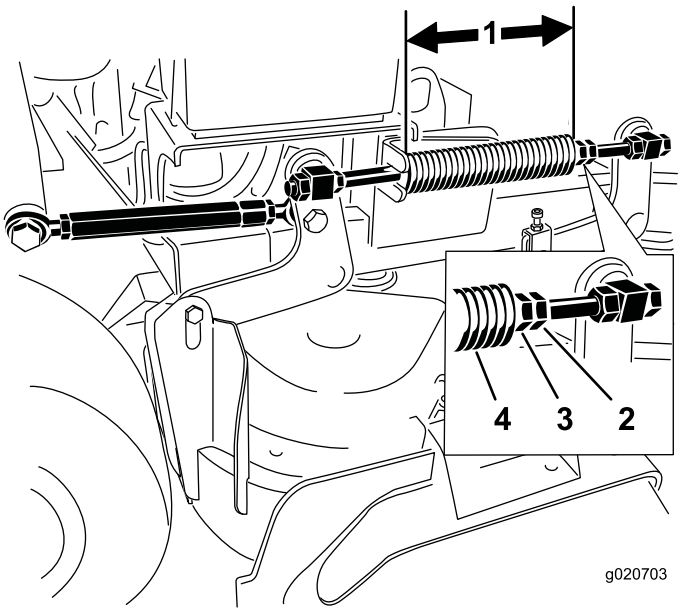

Figure 87

1. 25.7 cm (10-1/8 inch) for 102 cm (40 inch) mower decks and 28.2 cm (11-1/8 inch) for 91 cm (36 inch) mower decks
2. Spring-jam nut
3. Front nut
4. Compression spring

Replacing the Grass Deflector

⚠ WARNING

An uncovered discharge opening could allow the lawn mower to throw objects in the operator's or bystander's direction and result in serious injury. Also, contact with the blade could occur.

Do not operate the lawn mower unless you install a cover plate, a mulch plate, grass deflector, or bagger.

1. Remove the locknut, bolt, spring, and spacer holding the deflector to the pivot brackets (Figure 88).

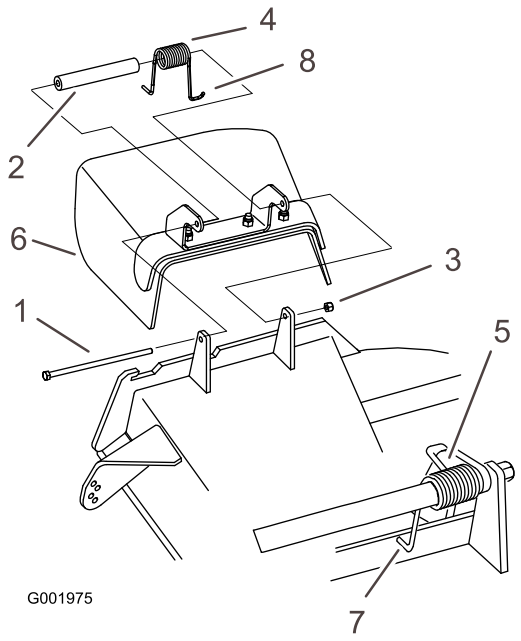

Figure 88

1. Bolt
2. Spacer
3. Locknut
4. Spring
5. Spring (installed)
6. Grass deflector
7. **J**-hook end of the spring

2. Remove the damaged or worn grass deflector.
3. Place the spacer and the spring onto the grass deflector.
4. Place 1 **J** end of the spring behind the deck edge.

   Note: Make sure 1 **J** end of spring is installed behind deck edge before installing the bolt as shown in Figure 88.
5. Install the bolt and the nut.
6. Place 1 **J**-hook end of the spring around the grass deflector (Figure 88).

   Important: The grass deflector must be able to rotate. Lift the deflector up to the full open position, and ensure that it rotates into the full down position.

Cleaning

Cleaning under the Mower

Service Interval: Before each use or daily

Remove the grass buildup under the mower daily.

1. Disengage the PTO, move the motion-control levers to the neutral-locked position, and set the parking brake.
2. Stop the engine, remove the key, and wait for all moving parts to stop before leaving the operating position.
3. Raise the front of the machine and use jack stands to support the mower.

Disposing of Waste

Engine oil, batteries, hydraulic oil, and engine coolant are pollutants to the environment. Dispose of these according to your state and local regulations.

Storage

Cleaning and Storage

1. Disengage the power take off (PTO), set the parking brake, and turn the ignition key to off. Remove the key.
2. Remove grass clippings, dirt, and grime from the external parts of the entire machine, especially the engine. Clean dirt and chaff from the outside of the engine's cylinder head fins and blower housing.

   Important: You can wash the machine with mild detergent and water. Do not pressure wash the machine. Avoid excessive use of water, especially near the drive system and engine. Pressure washing can force dirt and water into critical parts, such as spindle bearings and electrical switches.
3. Check the brake; refer to Servicing the Brake (page 43).
4. Service the air cleaner; refer to (page).
5. Grease the machine; refer to Lubrication (page 30).
6. Change the engine oil; refer to Changing the Engine Oil (page 34).
7. Check the tire pressure; refer to Checking the Tire Pressure (page 41).
8. For long-term storage:
   A. Add stabilizer/conditioner additive to fuel in the tank.
   B. Run engine to distribute conditioned fuel through the fuel system (5 minutes).
   C. Stop engine, allow to cool and drain the fuel tank; refer to Servicing the Fuel Tank in Fuel System Maintenance (page 37), or operate engine until it stops.
   D. Restart engine and run until it stops. Repeat, on Choke until engine will not restart.
   E. Dispose of fuel properly. Recycle as per local codes.

   Note: Do not store stabilizer/conditioned gasoline over 90 days.
9. Remove the spark plug(s) and check its condition; refer to Servicing the Spark Plug in Engine Maintenance (page 32). With the spark plug(s) removed from the engine, pour two tablespoons of engine oil into the spark plug hole. Now use the starter to crank the engine and distribute the oil inside the cylinder. Install the spark plug(s). Do not install the wire on the spark plug(s).
10. Check and tighten all bolts, nuts, and screws. Repair or replace any part that is damaged or defective.
11. Paint all scratched or bare metal surfaces. Paint is available from your Authorized Service Dealer.
12. Store the machine in a clean, dry garage or storage area. Remove the key from the ignition switch and keep it in a memorable place. Cover the machine to protect it and keep it clean.

Troubleshooting

Problem	Possible Cause	Corrective Action
The engine will not start, starts hard, or fails to keep running.	1. Fuel tank is empty. 2. Choke is not on. 3. Spark plug wire is loose or disconnected. 4. Spark plug is pitted, fouled, or the gap is incorrect. 5. Air cleaner is dirty. 6. Dirt in the fuel filter. 7. Dirt, water, or stale fuel is in the fuel system. 8. The gap between the safety interlock switches is not correct.	1. Fill the fuel tank with gasoline. 2. Move the choke lever to choke position. 3. Install wire on spark plug. 4. Install a new, correctly gapped spark plug. 5. Service the air-cleaner element. 6. Replace the fuel filter. 7. Contact an Authorized Service Dealer. 8. Contact an Authorized Service Dealer.
The engine loses power.	1. Engine load is excessive. 2. Air cleaner is dirty. 3. Oil level in the crankcase is low. 4. Cooling fins and air passages under the engine blower housing are plugged. 5. Spark plug is pitted, fouled, or the gap is incorrect. 6. Vent hole in the fuel cap is plugged. 7. Dirt in the fuel filter. 8. Dirt, water, or stale fuel is in the fuel system.	1. Reduce the ground speed. 2. Service the air cleaner. 3. Add oil to the crankcase. 4. Remove the obstruction from the cooling fins and air passages. 5. Install a new, correctly gapped spark plug. 6. Clean or replace the fuel cap. 7. Replace the fuel filter. 8. Contact an Authorized Service Dealer.
The engine overheats.	1. Engine load is excessive. 2. Oil level in the crankcase is low. 3. Cooling fins and air passages under the engine blower housing are plugged.	1. Reduce the ground speed. 2. Add oil to the crankcase. 3. Remove the obstruction from the cooling fins and air passages.
The machine does not drive.	1. Hydraulic oil reservoir low. 2. Air in the hydraulic system. 3. Pump-drive belt slipping. 4. Pump-drive belt idler spring missing. 5. Pump bypass valves are open.	1. Add hydraulic oil to the reservoir. 2. Bleed the air out the hydraulic system. 3. Replace the pump-drive belt. 4. Replace the pump-drive-belt idler spring. 5. Tighten the by-pass valves. Torque to 12 to 15 N-m (110 to 130 in-lb).
There is an abnormal vibration.	1. Cutting blade(s) is/are bent or unbalanced. 2. Blade-mounting bolt is loose. 3. Engine-mounting bolts are loose. 4. Loose engine pulley, idler pulley, or blade pulley. 5. Engine pulley is damaged. 6. Blade spindle is bent.	1. Install new cutting blade(s). 2. Tighten the blade-mounting bolt. 3. Tighten the engine-mounting bolts. 4. Tighten the appropriate pulley. 5. Contact an Authorized Service Dealer. 6. Contact an Authorized Service Dealer.
The cutting height is uneven.	1. Blade(s) not sharp. 2. Cutting blade(s) is/are bent. 3. Mower deck is not level. 4. Mower deck pitch is wrong. 5. Underside of mower deck is dirty. 6. Tire pressure is not correct. 7. Blade spindle bent.	1. Sharpen the blade(s). 2. Install new cutting blade(s). 3. Level the mower deck side-to-side position. 4. Adjust the front-to-rear pitch. 5. Clean the underside of the mower deck. 6. Adjust the tire pressure. 7. Contact an Authorized Service Dealer.

Problem	Possible Cause	Corrective Action
The blades do not rotate.	1. Pump-drive belt is worn, loose or broken.	1. Check the belt tension.
	2. Pump-drive belt is off the pulley.	2. Install the drive belt, and check the adjusting shafts and belt guides for correct position.
	3. Mower-deck belt is worn, loose or broken.	3. Install the new deck belt.
	4. Mower-deck belt is off the pulley.	4. Install the deck pulley and check the idler pulley, idler arm and spring for correct position and function.
	5. Broken or missing idler spring.	5. Replace the spring.
	6. Electric clutch out of adjustment.	6. Adjust the clutch-air gap.
	7. Clutch connector or wire damaged.	7. Contact an Authorized Service Dealer.
	8. Damaged electric clutch.	8. Contact an Authorized Service Dealer.
	9. Safety-interlock system prevents blade rotation.	9. Contact an Authorized Service Dealer.
	10. PTO switch is faulty.	10. Contact an Authorized Service Dealer.

Schematics

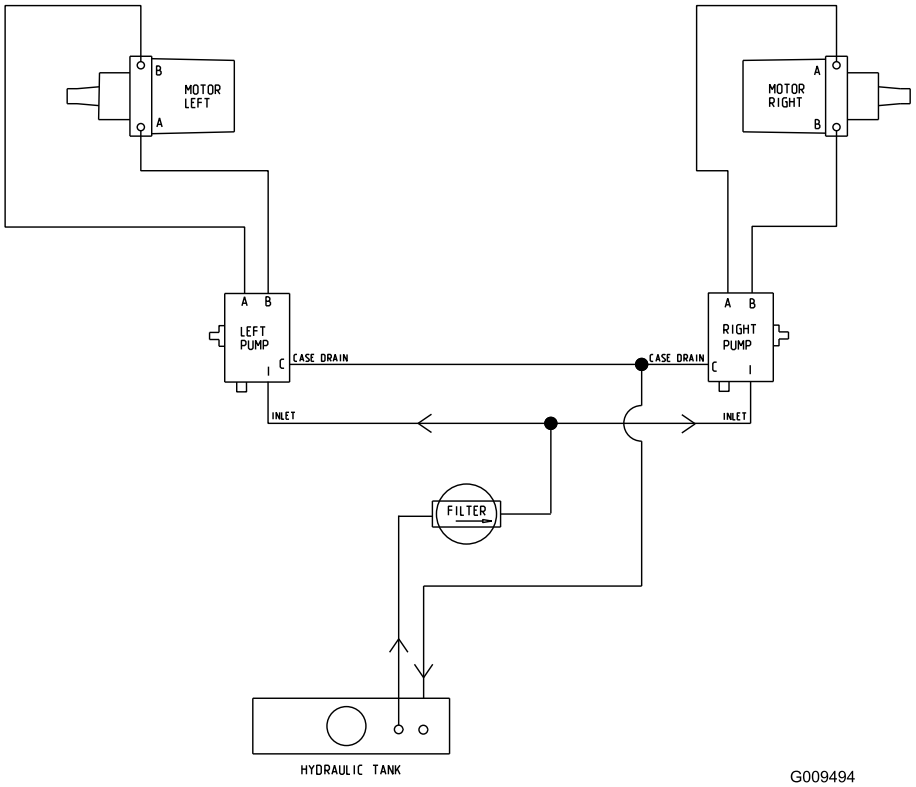

Hydraulic Schematic (Rev. A)

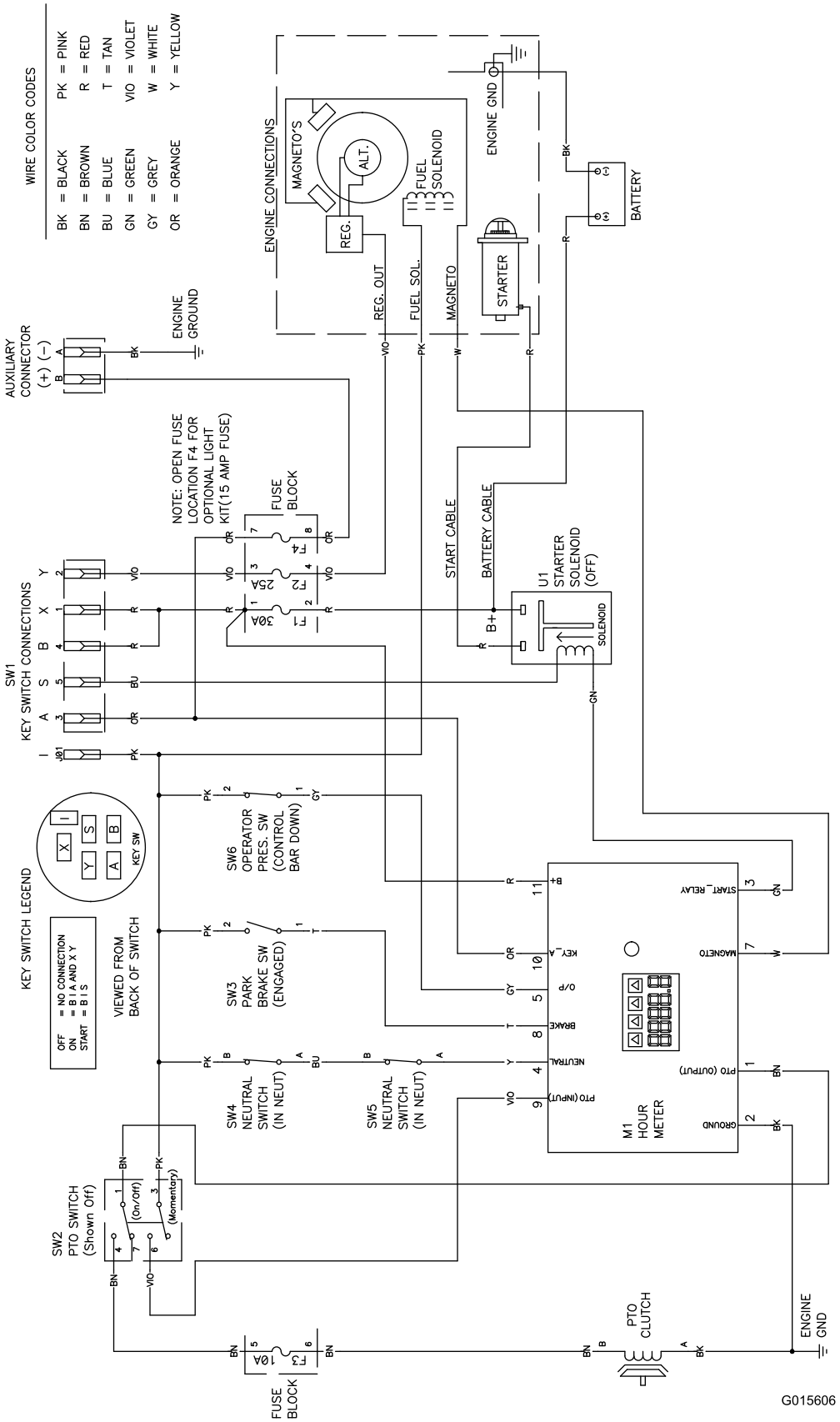

Electrical Schematic (Rev. A)

The Toro Total Coverage Warranty

A Limited Warranty (see warranty periods below)

Landscape Contractor Equipment (LCE)

Conditions and Products Covered

The Toro Company and its affiliate, Toro Warranty Company, pursuant to an agreement between them, jointly promise to the original purchaser to repair the Toro Products listed below if defective in materials or workmanship.

The following time periods apply from the date of purchase by the original owner:

Products	Warranty Period
21 in. Mowers	2 years Residential Use[1] 1 year Commercial Use
• Engines[4]	Honda – 2 years Kawasaki – 3 years
30 in. Mowers	2 years Residential Use[1] 1 year Commercial Use
• Engines[4]	Kawasaki – 3 years
Mid-Size Walk-Behind Mowers	2 years
• Engines[4]	Kawasaki – 3 years
Grand Stand® Mowers	5 years or 1,200 hours[2]
• Engines[4]	3 years
• Frame	Lifetime (original owner only)[3]
Z Master® 2000 Series Mowers	4 years or 500 hours[2]
• Engines[4]	3 years
• Frame	Lifetime (original owner only)[3]
Z Master® 3000 Series Mowers	5 years or 1,200 hours[2]
• Engines[4]	3 years
• Frame	Lifetime (original owner only)[3]
Z Master® 5000 Series Mowers	5 years or 1,200 hours[2]
• Engines[4]	Kohler Command – 2 years Kohler EFI – 3 years
• Frame	Lifetime (original owner only)[3]
Z Master® 6000 Series Mowers	5 years or 1,200 hours[2]
• Engines[4]	Kawasaki – 3 years
• Frame	Lifetime (original owner only)[3]
Z Master®7000 Series Mowers	5 years or 1,200 hours[2]
• Engines[4]	2 years
• Frame	Lifetime (original owner only)[3]
Z Master®8000 Series Mowers	2 years or 1,200 hours[2]
• Engines[4]	2 years
• Frame	Lifetime (original owner only)[3]
All Mowers	
• Battery	90 days Parts and Labor 1 year Parts only
• Belts and Tires	90 days
• Attachments	1 year

[1]Residential use means use of the product on the same lot as your home. Use at more than one location is considered commercial use and the commercial warranty would apply.

[2]Whichever occurs first.

[3]Lifetime Frame Warranty - If the main frame, consisting of the parts welded together to form the tractor structure that other components such as the engine are secured to, cracks or breaks in normal use, it will be repaired or replaced, at Toro's option, under warranty at no cost for parts and labor. Frame failure due to misuse or abuse and failure or repair required due to rust or corrosion are not covered.

[4]Some engines used on Toro Products are warranted by the engine manufacturer.

Instructions for Obtaining Warranty Service

If you think that your Toro Product contains a defect in materials or workmanship, follow this procedure:

1. Contact any Authorized Toro Service Dealer to arrange service at their dealership. To locate a dealer convenient to you, refer to the Yellow Pages of your telephone directory (look under “Lawn Mowers”) or access our web site at www.Toro.com. You may also call the numbers listed in item #3 to use the 24-hour Toro Dealer locator system.
2. Bring the product and your proof of purchase (sales receipt) to the Service Dealer. The dealer will diagnose the problem and determine if it is covered under warranty.
3. If for any reason you are dissatisfied with the Service Dealer’s analysis or with the assistance provided, contact us at:

   RLC Customer Care Department
   Toro Warranty Company
   8111 Lyndale Avenue South
   Bloomington, MN 55420-1196
   888-865-5676 (U.S. Customers)
   888-865-5691 (Canada customers)

Owner Responsibilities

You must maintain your Toro Product by following the maintenance procedures described in the *Operator's Manual*. Such routine maintenance, whether performed by a dealer or by you, is at your expense.

Items and Conditions Not Covered

There is no other express warranty except for special emission system coverage and engine warranty coverage on some products. This express warranty does not cover the following:

- Cost of regular maintenance service or parts, such as filters, fuel, lubricants, oil changes, spark plugs, air filters blade sharpening or worn blades, cable/linkage adjustments, or brake and clutch adjustments
- Components failing due to normal wear
- Any product or part which has been altered or misused or neglected and requires replacement or repair due to accidents or lack of proper maintenance
- Pickup and delivery charges
- Repairs or attempted repairs by anyone other than an Authorized Toro Service Dealer
- Repairs necessary due to failure to follow recommended fuel procedure (consult *Operator's Manual* for more details)
  - Removing contaminants from the fuel system is not covered
  - Use of old fuel (more than one month old) or fuel which contains more than 10% ethanol or more that 15% MTBE
  - Failure to drain the fuel system prior to any period of non-use over one month

General Conditions

All repairs covered by these warranties must be performed by an Authorized Toro Service Dealer using Toro approved replacement parts.

Neither The Toro Company nor Toro Warranty Company is liable for indirect, incidental or consequential damages in connection with the use of the Toro Products covered by this warranty, including any cost or expense of providing substitute equipment or service during reasonable periods of malfunction or non-use pending completion of repairs under this warranty.

All implied warranties of merchantability (that the product is fit for ordinary use) and fitness for use (that the product is fit for a particular purpose) are limited to the duration of the express warranty.

Some states do not allow exclusions of incidental or consequential damages, or limitations on how long an implied warranty lasts, so the above exclusions and limitations may not apply to you.

This warranty gives you specific legal rights, and you may also have other rights which vary from state to state.

Countries Other than the United States or Canada

Customers who have purchased Toro products outside the United States or Canada should contact their Toro Distributor (Dealer) to obtain guarantee policies for your country, province, or state. If for any reason you are dissatisfied with your Distributor's service or have difficulty obtaining guarantee information, contact the Toro importer. If all other remedies fail, you may contact us at Toro Warranty Company.

Australian Consumer Law: Australian customers will find details relating to the Australian Consumer Law either inside the box or at your local Toro Dealer.