Form No. 3390-468 Rev A

TORO®

Count on it.

Operator's Manual

Groundsmaster® 7200 and 7210 Series Traction Unit

Model No. 30487—Serial No. 315000001 and Up
Model No. 30487N—Serial No. 315000001 and Up
Model No. 30495—Serial No. 315000001 and Up

Register at www.Toro.com.
Original Instructions (EN)

CE

3390-468 A

This product complies with all relevant European directives; for details, please see the separate product-specific Declaration of Conformity (DOC) sheet.

⚠ WARNING

CALIFORNIA
Proposition 65 Warning

This product contains a chemical or chemicals known to the State of California to cause cancer, birth defects, or reproductive harm.

Diesel engine exhaust and some of its constituents are known to the State of California to cause cancer, birth defects, and other reproductive harm.

Because in some areas there are local, state, or federal regulations requiring that a spark arrester be used on the engine of this machine, a spark arrester is available as an option. If you require a spark arrester, contact your Authorized Toro Service Dealer.

Genuine Toro spark arresters are approved by the USDA Forestry Service.

Important: It is a violation of California Public Resource Code Section 4442 to use or operate the engine on any forest-covered, brush-covered, or grass-covered land without a spark arrester muffler maintained in working order, or the engine constricted, equipped, and maintained for the prevention of fire. Other states or federal areas may have similar laws.

Introduction

This machine is a ride-on, rotary-blade lawn mower intended to be used by professional, hired operators in commercial applications. It is primarily designed for cutting grass on well-maintained lawns in parks, sports fields, and on commercial grounds. It is not designed for cutting brush, mowing grass and other growth alongside highways, or for agricultural uses.

Read this information carefully to learn how to operate and maintain your product properly and to avoid injury and product damage. You are responsible for operating the product properly and safely.

You may contact Toro directly at www.Toro.com for product and accessory information, help finding a dealer, or to register your product.

Whenever you need service, genuine Toro parts, or additional information, contact an Authorized Service Dealer or Toro Customer Service and have the model and serial numbers of your product ready. Figure 1 identifies the location of the model and serial numbers on the product. Write the numbers in the space provided.

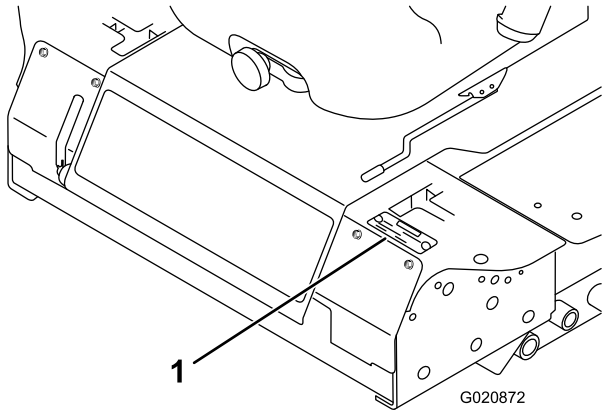

Figure 1

1. Model and serial number location

Model No. _____

Serial No. _____

This manual identifies potential hazards and has safety messages identified by the safety alert symbol (Figure 2), which signals a hazard that may cause serious injury or death if you do not follow the recommended precautions.



Figure 2

1. Safety alert symbol

This manual also uses 2 words to highlight information. **Important** calls attention to special mechanical information and **Note** emphasizes general information worthy of special attention.

© 2014—The Toro® Company
8111 Lyndale Avenue South
Bloomington, MN 55420

Contact us at www.Toro.com.
Printed in the USA.
All Rights Reserved

Contents

Safety 4
Safe Operating Practices 4
Toro Riding Mower Safety 5
Sound and Vibration Level Information 7
Slope Table 7
Slope Indicator 8
Safety and Instructional Decals 9
Setup 14
1 Adjusting the ROPS 15
2 Installing the Deck 15
3 Adjusting the Left Front Caster 15
4 Checking the Tire Pressure 15
5 Installing Weights (for CE Compliance) 16
6 Checking the Fluid Levels 17
7 Reading the Manuals and Viewing the Training Materials 17
Product Overview 18
Controls 18
Specifications 19
Attachments/Accessories 19
Operation 20
Adding Fuel 20
Filling the Fuel Tank 21
Checking the Engine-Oil Level 21
Checking the Cooling System 21
Checking the Hydraulic System 21
Using the Rollover Protection System (ROPS) 21
Think Safety First 22
Operating the Parking Brake 23
Starting and Stopping the Engine 23
Driving the Machine 24
Stopping the Machine 25
Operating the Mower 25
Adjusting the Height-of-Cut 26
Adjusting the Skid(s) 26
Adjusting the Rear Anti-Scalp Rollers 27
Adjusting the Rollers 27
The Safety Interlock System 29
Positioning the Seat 30
Unlatching the Seat 31
Pushing the Machine by Hand 31
Loading Machines 31
Transporting Machines 32
Operating Tips 33
Maintenance 34
Recommended Maintenance Schedule(s) 34
Daily Maintenance Checklist 35
Premaintenance Procedures 36
Lubrication 36
Greasing the Bearings and Bushings 36
Servicing the Mower-Deck Gear Box Lubricant 37
Engine Maintenance 38
Checking the Air Cleaner 38
Servicing the Engine-Oil 38
Fuel System Maintenance 40
Servicing the Water Separator 40
Cleaning the Fuel Tank 40
Fuel Lines and Connections 40
Bleeding the Fuel System 40
Bleeding Air from the Injectors 41
Electrical System Maintenance 42
Servicing the Battery 42
Storing the Battery 42
Checking the Fuses 42
Drive System Maintenance 43
Checking the Tire Pressure 43
Replacing the Caster Wheels and Bearings 43
Cooling System Maintenance 44
Checking the Cooling System 44
Cleaning the Radiator 45
Brake Maintenance 45
Adjusting the Parking Brake Interlock Switch 45
Belt Maintenance 46
Checking the Alternator Belt 46
Controls System Maintenance 47
Adjusting the Control Lever Neutral Interlock Switch 47
Adjusting the Control Lever Neutral Return 47
Adjusting the Traction Drive for Neutral 48
Adjusting the Maximum Ground Speed 49
Adjusting the Tracking 50
Hydraulic System Maintenance 51
Checking the Hydraulic System 51
Changing the Hydraulic Oil And Filter 52
Mower Deck Maintenance 53
Adjusting the Mower Deck Pitch 53
Cleaning 53
Cleaning Under the Mower 53
Waste Disposal 53
Storage 54
Machine 54
Engine 54

Safety

Machines with model numbers 30495, and 30487 meet or exceed CEN standard ISO EN 5395 and ANSI B71.4-2012 specifications in effect when the proper CE Kits have been installed per the Declaration of Conformity. Machine with model number 30487N meets or exceeds ANSI B71.4–2012 specifications in effect at the time of production

Improper use or maintenance by the operator or owner can result in injury. To reduce the potential for injury, comply with these safety instructions and always pay attention to the safety alert symbol, which means **Caution, Warning, or Danger**—personal safety instruction. Failure to comply with the instruction may result in personal injury or death.

Safe Operating Practices

The following instructions are adapted from the CEN standard EN 836:1997 and ANSI B71.4-2012.

This product is capable of amputating hands and feet and throwing objects. Always follow all safety instructions to avoid serious injury or death.

Training

- Read the *Operator's Manual* and other training material carefully. Be familiar with the controls, safety signs, and the proper use of the equipment.
- Never allow children or people unfamiliar with these instructions to use the lawn mower. Local regulations can restrict the age of the operator.
- Never mow while people, especially children, or pets are nearby.
- Keep in mind that the operator or user is responsible for accidents or hazards occurring to other people or their property.
- Do not carry passengers.
- All drivers should seek and obtain professional and practical instruction. Such instruction should emphasize:
  - the need for care and concentration when working with ride-on machines;
  - control of a ride-on machine sliding on a slope will not be regained by the application of the control levers. The main reasons for loss of control are:
    - ◊ insufficient wheel grip, especially on wet grass;
    - ◊ being driven too fast;
    - ◊ inadequate braking;
    - ◊ the type of machine is unsuitable for its task;
    - ◊ lack of awareness of the effect of ground conditions, especially slopes;
    - ◊ incorrect load distribution.

Preparation

- While mowing, always wear substantial footwear and long trousers. Do not operate the equipment when barefoot or wearing open sandals.
- Thoroughly inspect the area where the equipment is to be used and remove all objects which may be thrown by the machine.
- Replace faulty silencers/mufflers.
- Before using, always visually inspect to see that the blades, blade bolts and cutter assembly are not worn or damaged. Replace worn or damaged blades and bolts in sets to preserve balance.

Safe Handling of Fuels

- To avoid personal injury or property damage, use extreme care in handling fuel. Fuel can be is extremely flammable and the vapors are explosive.
- Extinguish all cigarettes, cigars, pipes, and other sources of ignition.
- Use only an approved fuel container.
- Never remove fuel cap or add fuel with the engine running.
- Allow engine to cool before refueling.
- Never refuel the machine indoors.
- Never store the machine or fuel container where there is an open flame, spark, or pilot light such as on a water heater or on other appliances.
- Never fill containers inside a vehicle or on a truck or trailer bed with a plastic liner. Always place containers on the ground away from your vehicle before filling.
- Remove equipment from the truck or trailer and refuel it on the ground. If this is not possible, then refuel such equipment with a portable container, rather than from a fuel dispenser nozzle.
- Keep the nozzle in contact with the rim of the fuel tank or container opening at all times until fueling is complete. Do not use a nozzle lock open device.
- If fuel is spilled on clothing, change clothing immediately.
- Never overfill fuel tank. Replace fuel cap and tighten securely.

Operation

- Be alert, slow down and use caution when making turns. Look behind and to the side before changing directions.
- Do not operate the engine in a confined space where dangerous carbon monoxide fumes can collect.
- Mow only in daylight or in good artificial light.
- Before attempting to start the engine, disengage all blade attachment clutches and shift into neutral.

- Remember there is no such thing as a safe slope. Travel on grass slopes requires particular care. To guard against overturning:
  - do not stop or start suddenly when on a slope;
  - use slow speeds on slopes and during tight turns;
  - stay alert for humps and hollows and other hidden hazards;
- Watch out for traffic when crossing or near roadways.
- Stop the blades from rotating before crossing surfaces other than grass.
- When using any attachments, never direct discharge of material toward bystanders nor allow anyone near the machine while in operation.
- Never operate the machine with damaged guards, shields, or without safety protective devices in place.
- Do not change the engine governor settings or overspeed the engine. Operating the engine at excessive speed may increase the hazard of personal injury.
- Before leaving the operator's position:
  - disengage the power take-off and lower the attachments;
  - change into neutral and set the parking brake;
  - stop the engine and remove the key.
- Disengage drive to attachments, stop the engine, and remove the ignition key:
  - before clearing blockages or unclogging chute;
  - before checking, cleaning or working on the lawn mower;
  - after striking a foreign object. Inspect the lawn mower for damage and make repairs before restarting and operating the equipment;
  - if the machine starts to vibrate abnormally (check immediately).
- Do not operate the mower under the influence of alcohol or drugs.
- Lightning can cause severe injury or death. If lightning is seen or thunder is heard in the area, do not operate the machine; seek shelter.
- Disengage drive to attachments when transporting or not in use.
- Stop the engine and disengage drive to attachment before refuelling.

Rollover Protection System (ROPS) - Use and Maintenance

- The ROPS is an integral and effective safety device. Keep a folding ROPS in the raised and locked position and use the seat belt when operating the machine.
- Lower a folding ROPS temporarily only when absolutely necessary. Do not wear the seat belt when folded down.
- Be aware there is no rollover protection when a folded ROPS is in the down position.
- Be certain that the seat belt can be released quickly in the event of an emergency.
- Check the area to be mowed and never fold down a folding ROPS in areas where there are slopes, drop offs or water.
- Check carefully for overhead clearances (i.e. branches, doorways, electrical wires) before driving under any objects and do not contact them.
- Keep the ROPS in safe operating condition by periodically thoroughly inspecting for damage and keeping all mounting fasteners tight.
- Replace a damaged ROPS. Do not repair or revise.
- **Do not** remove the ROPS.
- Any alterations to a ROPS must be approved by the manufacturer.

Maintenance and Storage

- Keep all nuts, bolts and screws tight to be sure the equipment is in safe working condition.
- Never store the equipment with fuel in the tank inside a building where fumes may reach an open flame or spark.
- Allow the engine to cool before storing in any enclosure.
- To reduce the fire hazard, keep the engine, silencer/muffler, battery compartment and fuel storage area free of grass, leaves, or excessive grease.
- Replace worn or damaged parts for safety.
- If the fuel tank has to be drained, do this outdoors.
- On multi-bladed mowers, take care as manually rotating one blade can cause other blades to rotate.
- When machine is to be parked, stored or left unattended, lower the mower deck.

Hauling

- Use care when loading or unloading the machine into a trailer or truck.
- Use full width ramps for loading machine into trailer or truck.
- Tie the machine down securely using straps, chains, cable, or ropes. Both front and rear straps should be directed down and outward from the machine

Toro Riding Mower Safety

The following list contains safety information specific to Toro products or other safety information that you must know that is not included in the CEN standard.

- Engine exhaust contains carbon monoxide, which is an odorless, deadly poison that can kill you. Do not run engine indoors or in an enclosed area.
- Keep hands, feet, hair and loose clothing away from attachment discharge area, underside of mower and any moving parts while engine is running.

- Do not touch equipment or attachment parts which may be hot from operation. Allow to cool before attempting to maintain, adjust, or service.
- Battery acid is poisonous and can cause burns. Avoid contact with skin, eyes and clothing. Protect your face, eyes, and clothing when working with a battery.
- This machine is not designed or equipped for on-road use and is a "slow-moving vehicle." If you must cross or travel on a public road, you should be aware of and comply with local regulations, such as required lights, slow moving vehicle signs, and reflectors.
- Battery gases can explode. Keep cigarettes, sparks and flames away from battery.
- Use only genuine Toro replacement parts to ensure that original standards are maintained.
- Use only Toro approved attachments. Warranty may be voided if used with unapproved attachments.

Slope Operation

- Do not mow near drop-offs, ditches, steep banks or water. Wheels dropping over edges can cause rollovers, which may result in serious injury, death, or drowning.
- Do not mow slopes when grass is wet. Slippery conditions reduce traction and could cause sliding and loss of control.
- Do not make sudden turns or rapid speed changes.
- Use a walk behind mower and/or a hand trimmer near drop-offs, ditches, steep banks or water.
- Reduce speed and use extreme caution on slopes.
- Remove or mark obstacles such as rocks, tree limbs, etc. from the mowing area. Tall grass can hide obstacles.
- Watch for ditches, holes, rocks, dips, and rises that change the operating angle, as rough terrain could overturn the machine.
- Avoid sudden starts when mowing uphill because the mower may tip backwards.
- Be aware that loss of traction may occur going downhill. Weight transfer to the front wheels may cause drive wheels to slip and cause loss of braking and steering.
- Always avoid sudden starting or stopping on a slope. If tires lose traction, disengage the blades and proceed slowly off the slope.
- Follow the manufacturer's recommendations for wheel weights or counterweights to improve stability.
- Use extreme care with attachments. These can change the stability of the machine and cause loss of control.

Using the Rollover Protection System (ROPS)

- Keep the roll bar in the raised and locked position and use the seat belt when operating the machine.
- Be certain that the seat belt can be released quickly in the event of an emergency.
- Be aware there is no rollover protection when the roll bar is down.
- Check the area to be mowed and never fold the ROPS in areas where there are slopes, drop offs or water.
- Lower the rollbar only when absolutely necessary. **Do not wear the seat belt with the roll bar folded down.**
- Check carefully for overhead clearances (i.e. branches, doorways, electrical wires) before driving under any objects and do not contact them.

Sound and Vibration Level Information

See the CE Kit Manual (30240) for guaranteed sound powers, sound pressure levels, and vibration levels.

Slope Table

This chart contains the maximum slope that you can safely operate the machine on.

A	B	C
16 Degrees	17 Degrees	18 Degrees

2015+ Models

		30354	30353	30457	30456
		72" SDD	72" base	62" base	60" SDD
30495	GM7200	C	C	C	B
30487(N)	GM7210	C	C	C	B

Note: Highlighted values shows the standard configuration of the model.

Slope Indicator

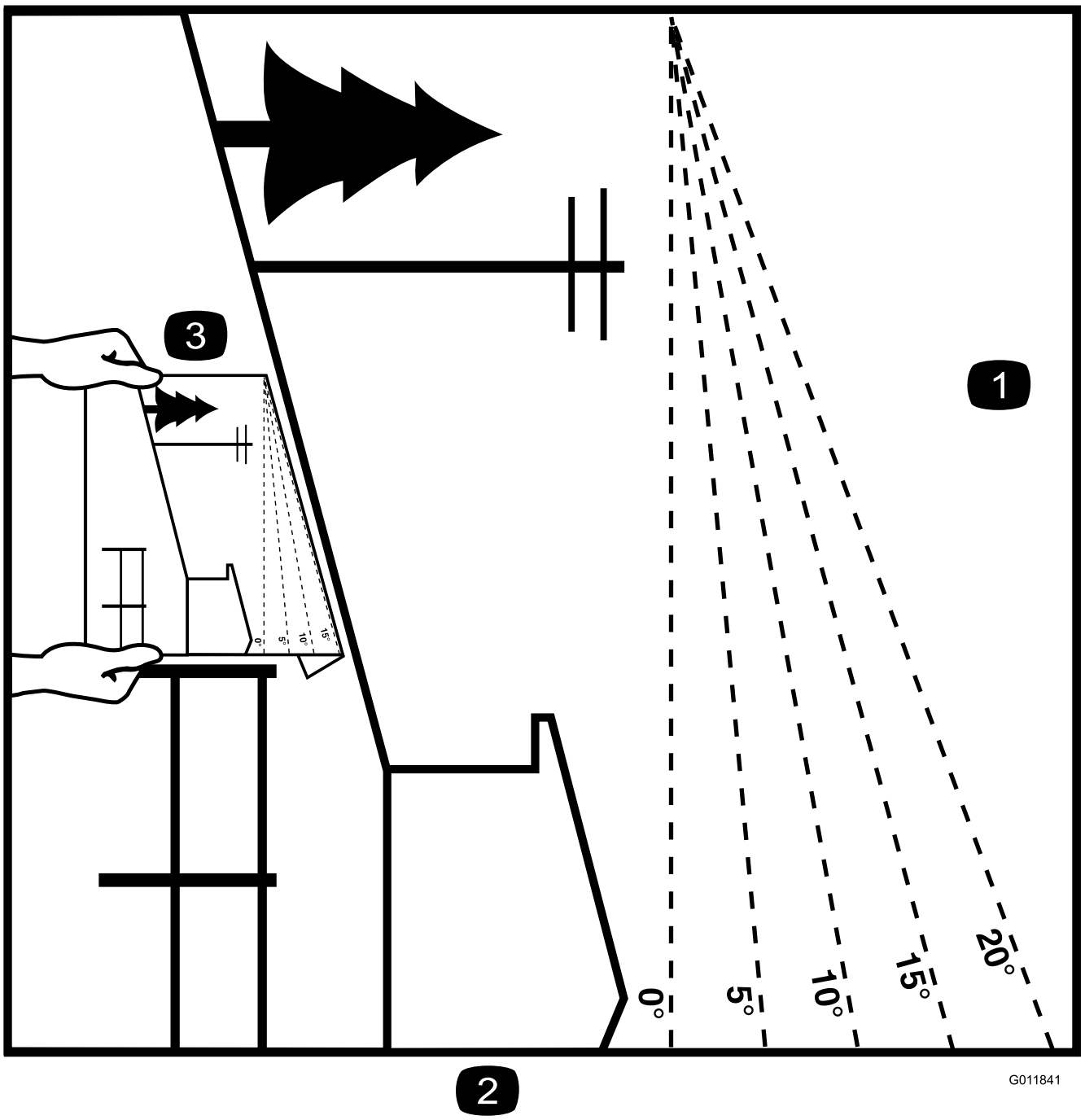

Figure 3

This page may be copied for personal use.

1. The maximum slope you can safely operate the machine on is noted in the table above. Use the slope chart to determine the degree of slope of hills before operating. **Do not operate this machine on a slope greater than what is rated for your machine.** Fold along the appropriate line to match the recommended slope.
2. Align this edge with a vertical surface, a tree, building, fence pole, etc.
3. Example of how to compare slope with folded edge.

Safety and Instructional Decals

Safety decals and instructions are easily visible to the operator and are located near any area of potential danger. Replace any decal that is damaged or lost.

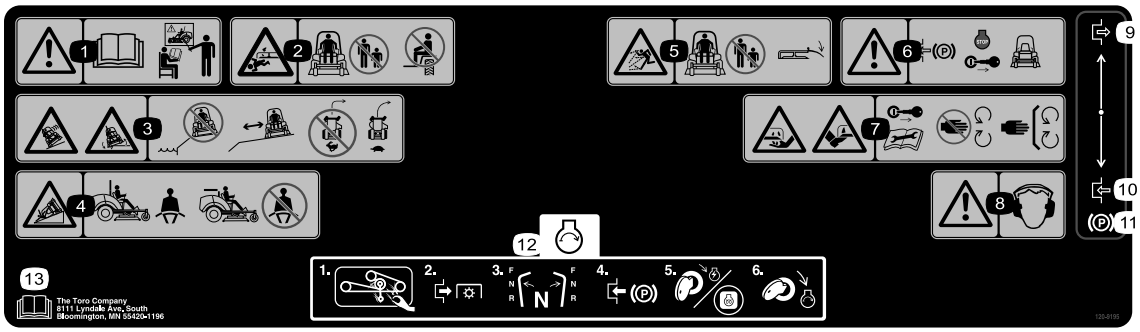

120-9195

1. Warning—read the *Operator's Manual* before operating and do not operate this machine unless you are trained.
2. Crushing/dismemberment hazard of bystanders—do not carry passengers, keep bystanders a safe distance from the machine.
3. Tipping, drop off hazard—do not operate near water drop-offs, stay a safe distance from drop-offs, slow machine before turning, do not turn at high speeds,
4. Wear a seat belt when a ROPS is in place, do not wear a seat belt when ROPS is lowered.
5. Thrown object hazard—keep bystanders a safe distance from the machine; keep all deflectors and shields in place.
6. Warning—engage the parking brake, stop the engine and remove the ignition key before leaving the machine.
7. Cutting hazard of hand or foot—remove the ignition key and read the instructions before servicing or performing maintenance, keep away from moving parts.
8. Warning—wear hearing protection.
9. Engage
10. Disengage
11. Parking brake
12. To start the engine: clear any debris from the attachment, disengage the PTO, move the motion control levers to the neutral position, engage the parking brake, turn the ignition to Run and wait for the glow plug light to turn off, turn the ignition key to Start.
13. Read the *Operator's Manual*.

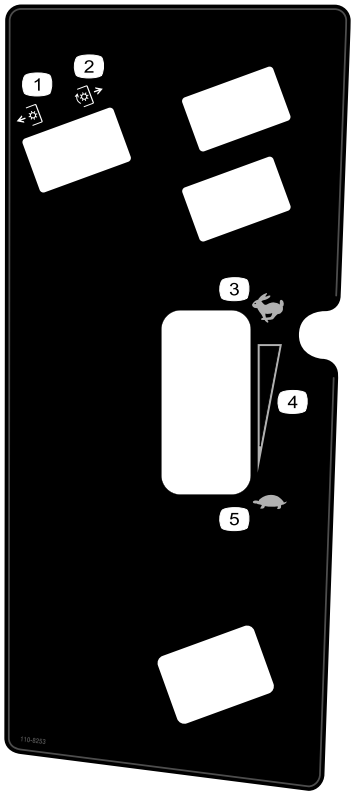

110-8253

1. PTO–Off
2. PTO—On
3. Fast
4. Continuous variable setting
5. Slow

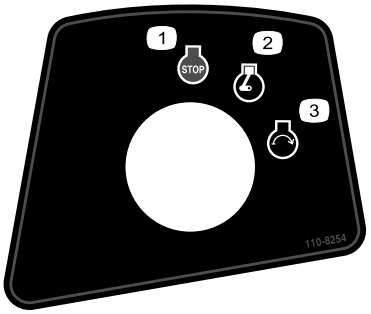

110-8254

1. Engine–Stop
2. Engine—Run
3. Engine—Start

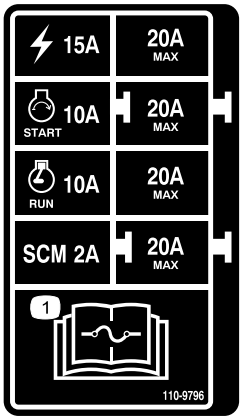

110-9796

1. Read the *Operator's Manual* for information on fuses.

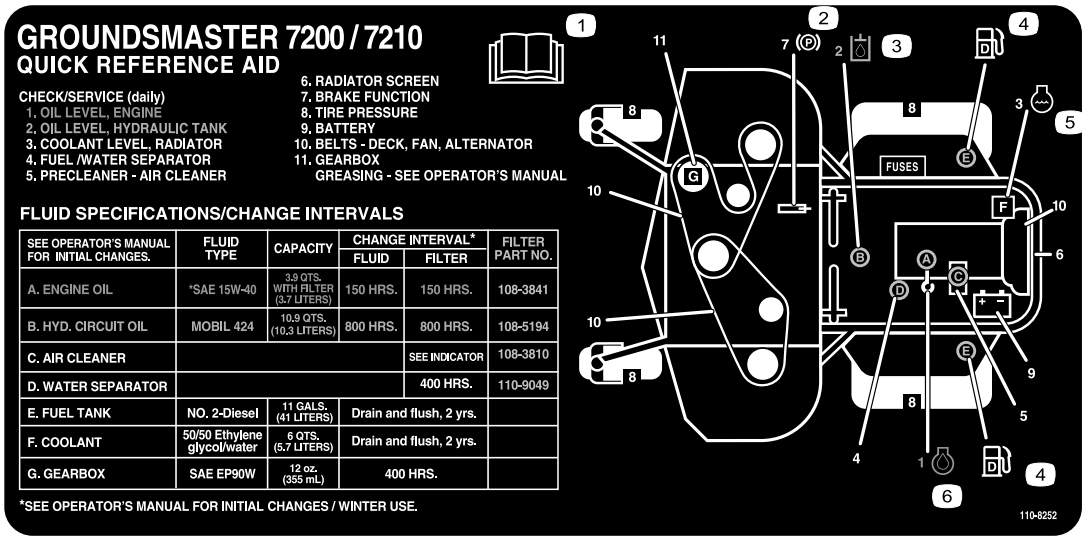

110-8252

1. Read the *Operator's Manual.*
2. Parking brake
3. Hydraulic oil
4. Fuel
5. Engine coolant
6. Engine oil

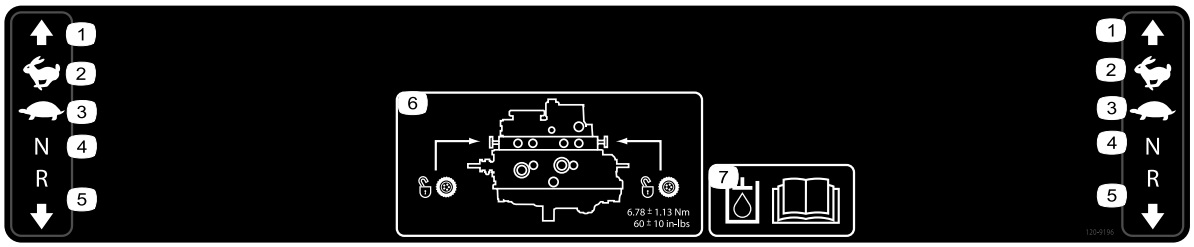

120-9196

1. Forward
2. Fast
3. Slow
4. Neutral
5. Reverse
6. Tow valve location; torque the tow valves to 6.78 ± 1.13 N·m (60 ± 10 in-lbs).
7. Read the *Operator's Manual* for more information on the hydraulic oil.

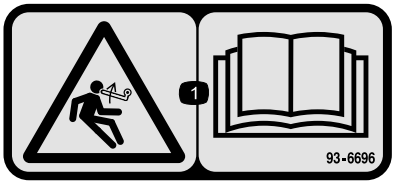

93–6696

1. Stored energy hazard—read the *Operator's Manual*.



93-6687

1. Do not step here.



93-6697

1. Read the *Operator's Manual*.
2. Add SAE 80w-90 (API GL-5) oil every 50 hours.

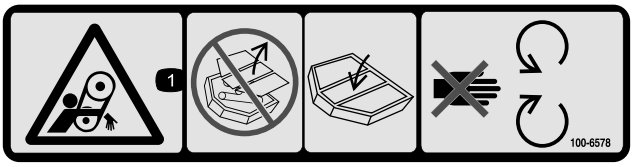

100-6578

1. Entanglement hazard, belt—do not operate the machine with the shields or guards removed; always keep the shields and guards in place; stay away from moving parts.



106-6755

1. Engine coolant under pressure.
2. Explosion hazard—read the *Operator's Manual.*
3. Warning—do not touch the hot surface.
4. Warning—read the *Operator's Manual.*

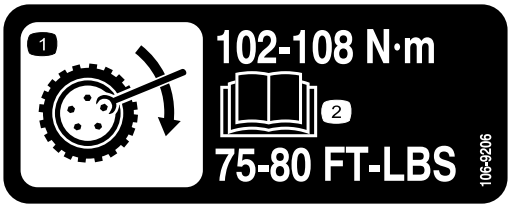

106-9206

1. Wheel torque specifications
2. Read the *Operator's Manual*.

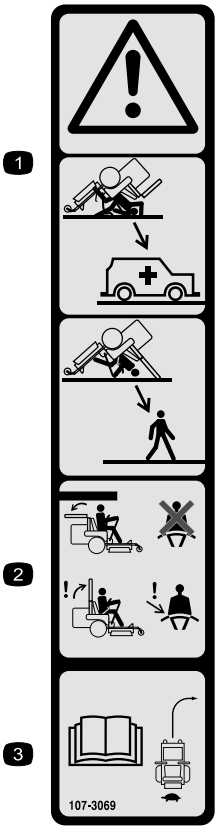

107-3069

1. Warning–there is no rollover protection when the roll bar is down.
2. To avoid injury or death from a rollover accident, keep the roll bar in the raised and locked position and wear the seat belt. Lower the roll bar only when absolutely necessary; do not wear the the seat belt when the roll bar is down.
3. Read the *Operator's Manual*; drive slowly and carefully.

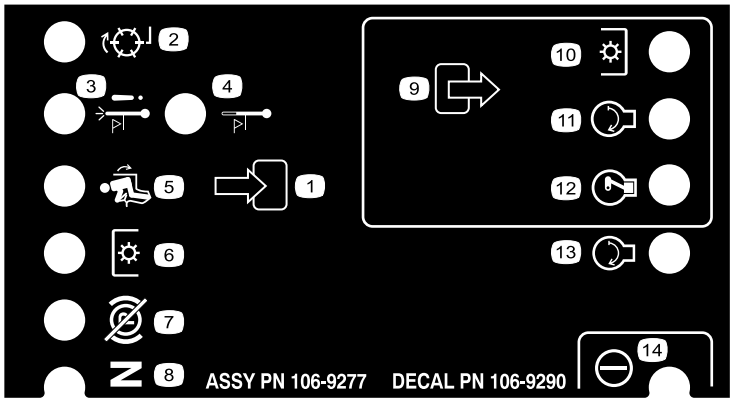

106-9290

1. Inputs
2. Not active
3. High temperature shutdown
4. High temperature warning
5. In seat
6. Power Take-off (PTO)
7. Parking brake Off
8. Neutral
9. Outputs
10. Power Take Off (PTO)
11. Start
12. Energize to Run (ETR)
13. Start
14. Power

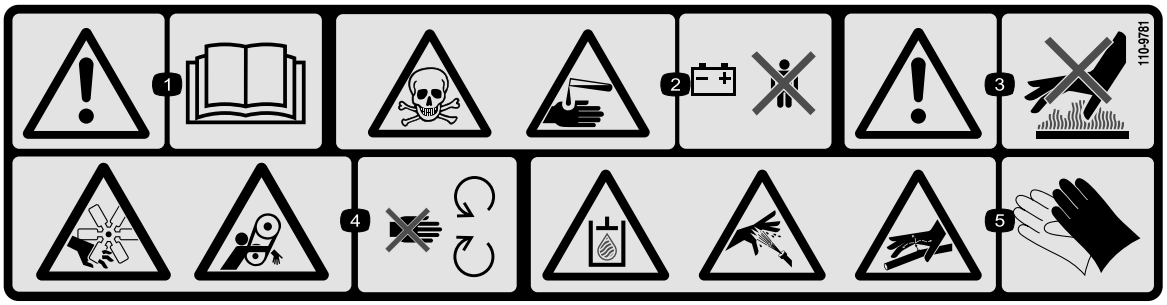

110-9781

1. Warning—read the *Operator's Manual.*
2. Poison and caustic liquid/chemical burn hazard—keep children a safe distance from the battery.
3. Warning—do not touch the hot surface.
4. Cutting/dismemberment hazard, fan and entanglement hazard, belt—stay away from moving parts.
5. Hydraulic oil in system under pressure, escaping hydraulic oil penetrating skin hazard, broken hydraulic lines hazard—wear protective hand protection when handling hydraulic system components.

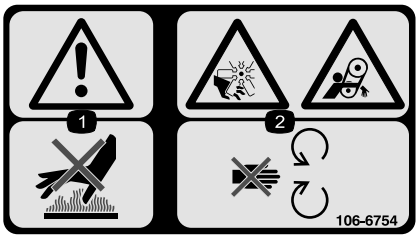

106-6754

1. Warning—do not touch the hot surface.
2. Cutting/dismemberment hazard, fan and entanglement hazard, belt—stay away from moving parts.

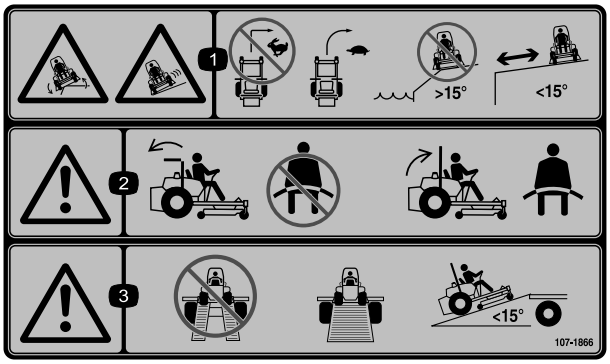

107-1866

1. Tipping hazard and sliding or loss of control hazard, drop-offs—do not turn sharply while traveling fast, instead, slow down and turn gradually, do not operate the machine near drop-offs, slopes greater than 15 degrees, or water; keep a safe distance from drop-offs.
2. Warning—if the roll bar is lowered, do not wear the seat belt, if the roll bar is raised, wear the seat belt.
3. Warning—do not use split ramps, use a full ramps when transporting machine, only use ramps with inclines less than 15 degrees.

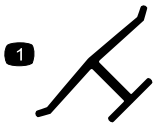

Manufacturer's Mark

1. Indicates the blade is identified as a part from the original machine manufacturer.



Battery Symbols

Some or all of these symbols are on your battery

1. Explosion hazard
2. No fire, open flame, or smoking.
3. Caustic liquid/chemical burn hazard
4. Wear eye protection
5. Read the *Operator's Manual.*
6. Keep bystanders a safe distance from the battery.
7. Wear eye protection; explosive gases can cause blindness and other injuries
8. Battery acid can cause blindness or severe burns.
9. Flush eyes immediately with water and get medical help fast.
10. Contains lead; do not discard.

Setup

Loose Parts

Use the chart below to verify that all parts have been shipped.

Procedure	Description	Qty.	Use
1	No parts required	–	Adjust the ROPS.
2	Deck installation manual	1	Install the deck
3	No parts required	–	Adjust the left front caster.
4	No parts required	–	Check the tire pressure.
5	No parts required	–	Install weights.
6	No parts required	–	Check the hydraulic fluid, engine oil, and coolant levels.
7	Operator's Manual Engine Operator's Manual Parts Catalog Operator Training Material Engine warranty Declaration of Conformity Deck installation instructions	1 1 1 1 1 1 1	Read the manuals and view the training materials before operating the machine. Use the remaining parts for the installation of attachments.

1

Adjusting the ROPS

No Parts Required

Procedure

1. Remove the hairpin cotter pins and remove the 2 pins from the roll bar (Figure 4).

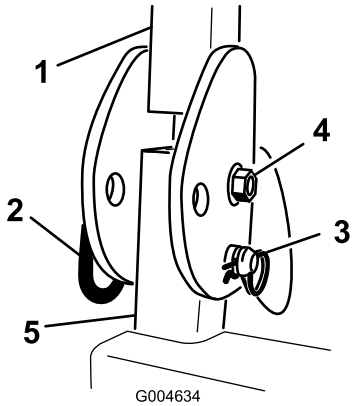

Figure 4
Right Side Shown

1. Roll bar
2. Pin
3. Hairpin cotter pin

2. Raise the roll bar to the upright position and install the 2 pins and secure them with the hairpin cotter pins (Figure 4).

   Note: If you must lower the roll bar, push the bar forward to relieve pressure on the pins, remove the pins, lower the bar slowly, and secure it with the pins so that it does not damage the hood.

2

Installing the Deck

Parts needed for this procedure:

1	Deck installation manual

Procedure

Install the deck using the *Installation Manual* for that deck.

3

Adjusting the Left Front Caster

No Parts Required

Procedure

Adjust the wheel to the outside position for 72” decks and to the inside position for 60” and 62” decks.

4

Checking the Tire Pressure

No Parts Required

Procedure

The tires are over inflated for shipping. Therefore, release some of the air to reduce the pressure. The correct air pressure is 103 kPa (15 psi) in the rear tires and 172 kPa (25 psi) in the caster wheels.

5

Installing Weights (for CE Compliance)

No Parts Required

Procedure

Machines with 183 cm (72 inch) decks installed and no other attachments, do not need added weight to meet CE standards. However, you may need to purchase and install additional weight depending on the mower deck size/type and the attachments that you install on the machine. The following table lists the various attachment configurations and the additional front weight needed for each model:

Attachment Configuration	Weight Required with a 157.5 cm (62 inch) Base Deck (30457)	Weight Required with a 183 cm (72 inch) Base Deck (30353)	Weight Required with a 183 cm (72 inch) Side-discharge (30354)
Groundsmaster 7200/7210 Traction Unit with no Added Attachments	10 kg (22 lb)	0 kg (0 lb)	0 kg (0 lb)
Groundsmaster 7200/7210 Traction Unit and Hard Canopy	34 kg (75 lb)	9.5 kg (21 lb)	15 kg (33 lb)
Groundsmaster 7200/7210 Traction Unit, Hard Canopy, and Road Light Kit	32.2 kg (71 lb)	28.5 kg (63 lb)	10 kg (22 lb)
Groundsmaster 7200/7210 Traction Unit, Hard Canopy, Road Light Kit, and Jack Stand	18 kg (40 lb)	17 kg (37 lb)	10 kg (22 lb)
Groundsmaster 7200/7210 Traction Unit, Hard Canopy, and Jack Stand	14 kg (31 lb)	10 kg (22 lb)	10 kg (22 lb)
Groundsmaster 7200/7210 Traction Unit, Road Light Kit, and Jack Stand	0 kg (0 lb)	0 kg (0 lb)	0 kg (0 lb)
Groundsmaster 7200/7210 Traction Unit and Road Light Kit	11.3 kg (25 lb)	0 kg (0 lb)	0 kg (0 lb)
Groundsmaster 7200/7210 Traction Unit and Jack Stand	0 kg (0 lb)	0 kg (0 lb)	0 kg (0 lb)

Contact your Authorized Toro Distributor to obtain the appropriate kits and weights for your machine.

6

Checking the Fluid Levels

No Parts Required

Procedure

1. Check the hydraulic fluid level before starting the engine, refer to Hydraulic System Maintenance (page 51).
2. Check the engine oil level before and after starting the engine, refer to Servicing the Engine-Oil (page 38).
3. Check the cooling system before starting the engine; refer to Checking the Cooling System (page 21).

7

Reading the Manuals and Viewing the Training Materials

Parts needed for this procedure:

1	*Operator's Manual*
1	*Engine Operator's Manual*
1	*Parts Catalog*
1	Operator Training Material
1	Engine warranty
1	Declaration of Conformity
1	Deck installation instructions

Procedure

1. Read the manuals.
2. View the operator training materials.

Product Overview

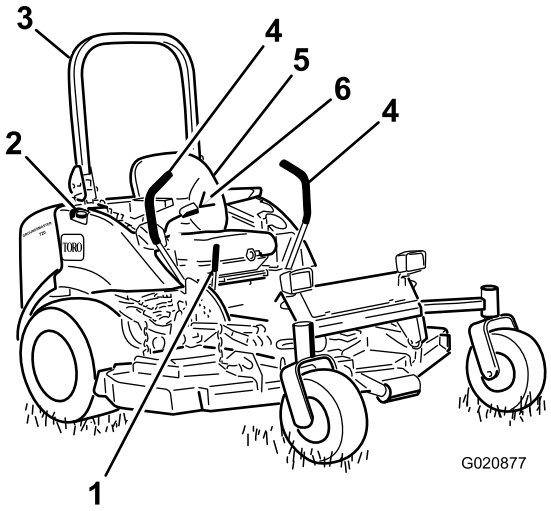

Figure 5

1. Parking brake lever
2. Fuel cap (both sides)
3. Roll bar
4. Motion control lever
5. Seat
6. Seat belt

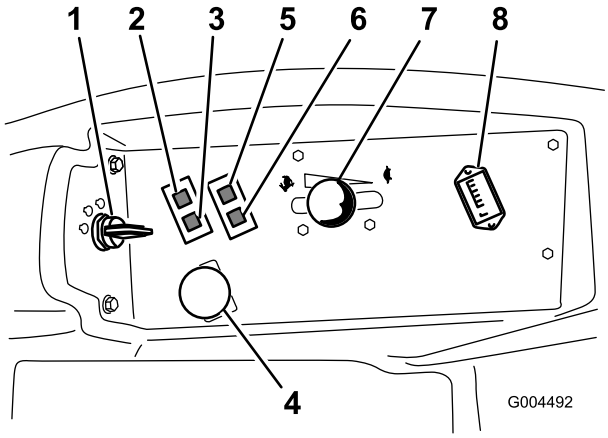

Figure 6

1. Ignition switch
2. Engine coolant temperature warning light
3. Glow plug light
4. Power take off (PTO) Switch
5. Oil pressure warning light
6. Charge indicator light
7. Throttle lever
8. Hour meter

Controls

Become familiar with all the controls before you start the engine and operate the machine (Figure 5 and Figure 6).

Motion Control Levers

The motion control levers control the forward and rearward motions as well as the turning of the machine. Refer to Driving the Machine (page 24).

Parking Brake Lever

Whenever the engine is shut off, engage the parking brake to prevent accidental movement of the machine. To engage the parking brake, pull the parking brake lever rearward and up (Figure 7). To release the parking brake, push the parking brake lever forward and down.

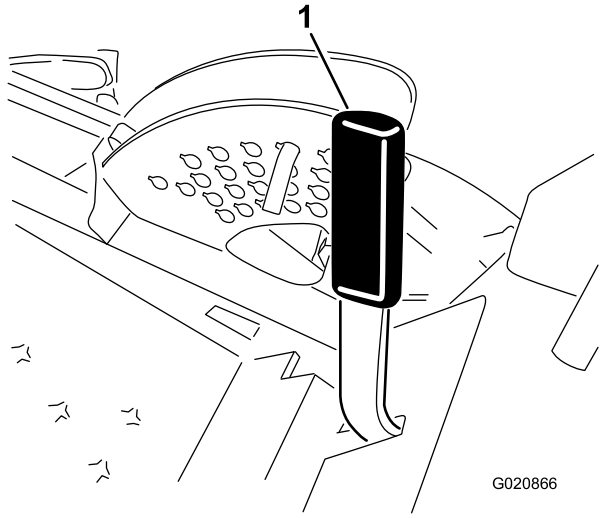

Figure 7

1. Parking brake lever

⚠ CAUTION

Do not park the traction unit on a slope.

Ignition Switch

The ignition switch has 3 positions: Off, On/Preheat, and Start.

Throttle Lever

The throttle lever controls the speed of the engine. Moving the throttle lever forward toward the Fast position increases the engine speed. Moving it rearward toward the Slow position decreases the engine speed. The throttle controls the speed of the blades and, in conjunction with motion control levers, controls ground speed of the machine. Always run the machine with the throttle in the Fast position when cutting grass.

Power Take Off (PTO) Switch

The power take-off (PTO) switch starts and stops the mower blades.

Hour Meter

The hour meter records the number of hours the engine has operated. It operates when the key switch is in the Run position. Use these times for scheduling regular maintenance.

Glow-Plug Light (Orange Light)

The glow-plug indicator light turns on when the ignition switch is turned to the On position. It remains lit for 6 seconds. When the light turns off, the engine is ready to start.

Engine-Coolant-Temperature Warning Light

This light glows and the cutting blades stop if the engine coolant temperature is high. If the machine is not stopped and the coolant temperature rises another 20° F, the engine will stop.

Important: If the mower deck shuts down and the temperature warning light is on, push PTO knob down, drive to a safe flat area, move the throttle lever to the Slow position, move the motion control levers into the neutral locked position, and engage the parking brake. Allow the engine to idle for several minutes while it cools to a safe level. Stop the engine and check the cooling system; refer to Checking the Cooling System (page 21).

The Charge Indicator

Illuminates when the system charging circuit malfunctions.

Oil-Pressure Warning Light

The oil-pressure warning light glows when the oil pressure in engine drops below a safe level. If low oil pressure ever occurs, stop the engine and determine the cause. Repair the damage before starting the engine again.

Fuel Gauge

The fuel gauge (Figure 8) indicates the quantity of fuel remaining in the fuel tanks.

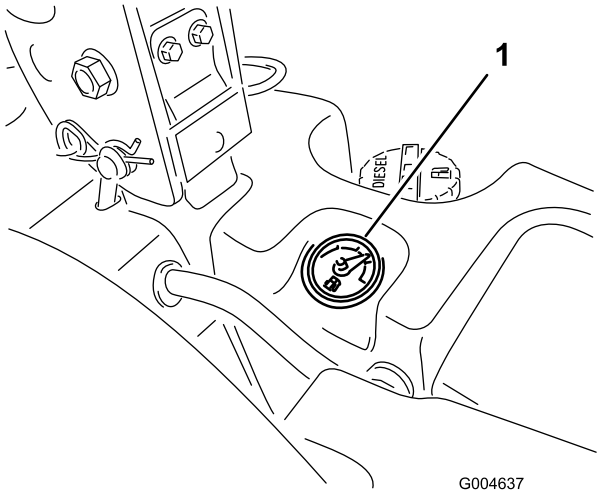

Figure 8

1. Fuel gauge

Specifications

Note: Specifications and design are subject to change without notice.

Length	246.4 cm (97 inches)
Width (Rear Wheels)	144.8 cm (57 inches)
Height (Roll Bar Up)	182.9 cm (72 inches)
Height (Roll Bar Down)	121.9 cm (48 inches)
Weight, with 72” SDD (30354 or 30481)	934 kg (2060 lb)
Weight, with 60” SDD (30456)	900 kg (1985 lb)
Weight, with 72” Base Deck (30353)	876 kg (1932 lb)
Weight, with 62” Base Deck (30457)	855 kg (1884 lb)

Attachments/Accessories

A selection of Toro approved attachments and accessories is available for use with the machine to enhance and expand its capabilities. Contact your Authorized Service Dealer or Distributor or go to www.Toro.com for a list of all approved attachments and accessories.

Operation

Note: Determine the left and right sides of the machine from the normal operating position.

⚠ CAUTION

This machine produces sound levels in excess of 85 dBA at the operator's ear and can cause hearing loss through extended periods of exposure.

Wear hearing protection when operating this machine.

Adding Fuel

Use only clean, fresh diesel fuel with ultra low (<15 ppm) sulfur content meeting ASTM D 975 or EN 590 specifications. The minimum cetane rating should be 40. Purchase fuel in quantities that can be used within 180 days to ensure fuel freshness.

Important: Use of non-ultra low sulfur fuel will cause damage to the engine emission system.

Fuel tank capacity: 43.5 liters (11.5 US gallons)

Use summer grade diesel fuel (No. 2-D) at temperatures above -7° C (20° F) and winter grade (No. 1-D or No. 1-D/2-D blend) below that temperature. Use of winter grade fuel at lower temperatures provides lower flash point and cold flow characteristics which will ease starting and reduce fuel filter plugging.

Use of summer grade fuel above -7° C (20° F) will contribute toward longer fuel pump life and increased power compared to winter grade fuel.

Important: Do not use kerosene or gasoline instead of diesel fuel. Failure to observe this caution will damage the engine.

⚠ WARNING

Fuel is harmful or fatal if swallowed. Long-term exposure to vapors can cause serious injury and illness.

- **Avoid prolonged breathing of vapors.**
- **Keep face away from nozzle and fuel tank or conditioner opening.**
- **Keep fuel away from eyes and skin.**

Biodiesel Ready

This machine can also use a biodiesel blended fuel of up to B20 (20% biodiesel, 80% petrodiesel). The petrodiesel portion must be ultra low sulfur. Observe the following precautions:

- The biodiesel portion of the fuel must meet specification ASTM D6751 or EN14214.
- The blended fuel composition should meet ASTM D975 or EN590.
- Painted surfaces may be damaged by biodiesel blends.
- Monitor seals, hoses, gaskets in contact with fuel as they may be degraded over time.
- Fuel filter plugging may be expected for a time after converting to biodiesel blended.
- Contact your distributor if you wish more information on biodiesel.

⚠ DANGER

In certain conditions, fuel is extremely flammable and highly explosive. A fire or explosion from fuel can burn you and others and can damage property.

- **Fill the fuel tank outdoors, in an open area, when the engine is cold. Wipe up any fuel that spills.**
- **Never fill the fuel tank inside an enclosed trailer.**
- **Never smoke when handling fuel, and stay away from an open flame or where fuel fumes may be ignited by a spark.**
- **Store fuel in an approved container and keep it out of the reach of children. Never buy more than a 180-day supply of fuel.**
- **Do not operate machine without entire exhaust system in place and in proper working condition.**

⚠ DANGER

In certain conditions during fueling, static electricity can be released causing a spark which can ignite the fuel vapors. A fire or explosion from fuel can burn you and others and can damage property.

- **Always place fuel containers on the ground away from your vehicle before filling.**
- **Do not fill fuel containers inside a vehicle or on a truck or trailer bed because interior carpets or plastic truck bed liners may insulate the container and slow the loss of any static charge.**
- **When practical, remove equipment from the truck or trailer and refuel the equipment with its wheels on the ground.**
- **If this is not possible, then refuel such equipment on a truck or trailer from a portable container, rather than from a fuel dispenser nozzle.**
- **If a fuel dispenser nozzle must be used, keep the nozzle in contact with the rim of the fuel tank or container opening at all times until fueling is complete.**

Filling the Fuel Tank

1. Park the machine on a level surface.

   Important: The fuel tanks are connected, but the fuel does not transfer quickly from one tank to the other. It is important when filling that you park on a level surface. If you park on a hill, you may inadvertently overfill the tanks.

2. Shut the engine off and set the parking brake.
3. Clean around each fuel tank cap and remove the cap.

   Important: Do not open the fuel tanks when parked on a hill. The fuel could spill out.

4. Add fuel to both fuel tanks, until the level is even with the bottom of the filler neck (Figure 9). **Do not over fill the fuel tanks.**

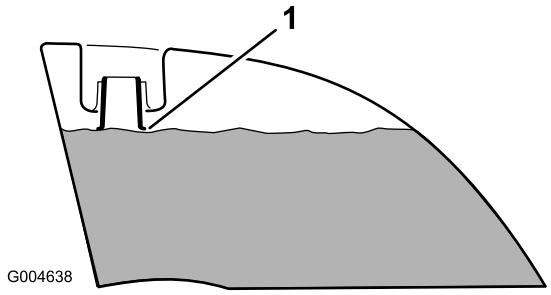

Figure 9

1. Bottom of the filler neck

5. Install the fuel tank caps securely. Wipe up any fuel that may have spilled.

Note: If possible, fill the fuel tanks after each use. This will minimize possible buildup of condensation inside the fuel tank.

Checking the Engine-Oil Level

Before you start the engine and use the machine, check the oil level in the engine crankcase; refer to Checking the Engine-Oil Level (page 38).

Checking the Cooling System

Before you start the engine and use the machine, check the cooling system; refer to Checking the Cooling System (page 21).

Checking the Hydraulic System

Before you start the engine and use the machine, check the hydraulic system; refer to Hydraulic System Maintenance (page 51).

Using the Rollover Protection System (ROPS)

⚠ WARNING

To avoid injury or death from rollover: keep the roll bar in the raised locked position and use the seat belt.

Ensure that the rear part of the seat is secured with the seat latch.

⚠ WARNING

There is no rollover protection when the roll bar is in the down position.

- **Lower the roll bar only when absolutely necessary.**
- **Do not wear the seat belt when the roll bar is in the down position.**
- **Drive slowly and carefully.**
- **Raise the roll bar as soon as clearance permits.**
- **Check carefully for overhead clearances (i.e. branches, doorways, electrical wires) before driving under any objects and do not contact them.**

Important: Lower the roll bar only when absolutely necessary.

1. To lower the roll bar, remove the hairpin cotters, push the roll bar forward against the springs, and remove the 2 pins (Figure 10).

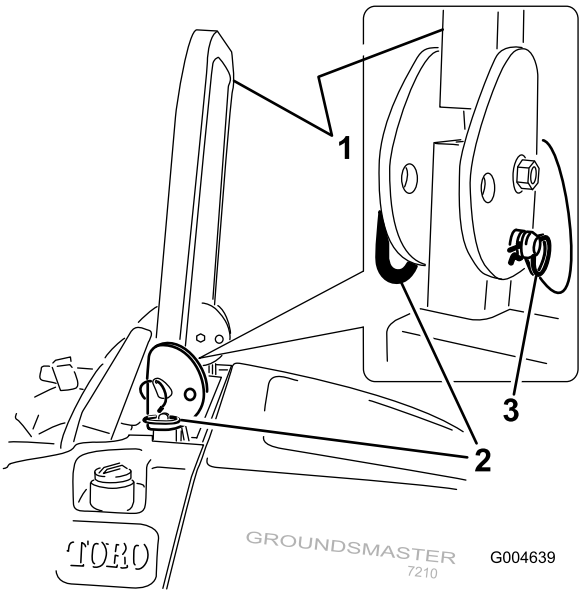

Figure 10

1. Roll bar
2. Pin
3. Hairpin cotter

2. Lower the roll bar to the down position (Figure 11).

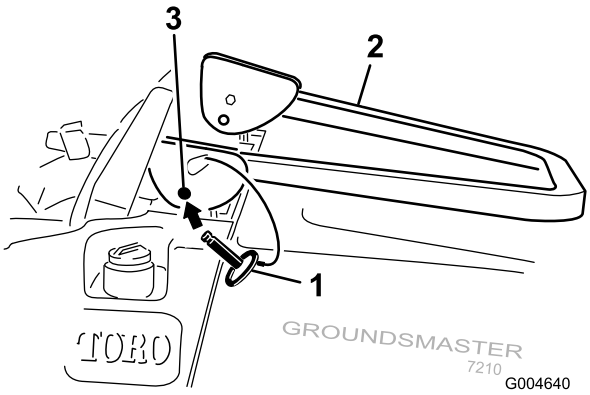

Figure 11

1. Pin
2. Roll bar
3. Mounting hole

3. Install the 2 pins and secure them with the hairpin cotter pins (Figure 10).

   Important: Ensure that the rear part of the seat is secured with the seat latch.

4. To raise the roll bar, remove the hairpin cotter pins and remove the 2 pins (Figure 10).
5. Raise the roll bar to the upright position and install the two pins and secure them with the hairpin cotter pins (Figure 10).

Important: Always use the seat belt when the roll bar is in the raised and locked position. Do not use the seat belt when the roll bar is in the lowered position.

Think Safety First

Please read all safety instructions and symbols in the safety section. Knowing this information could help you or bystanders avoid injury.

⚠ DANGER

Operating on wet grass or steep slopes can cause sliding and loss of control.

Wheels dropping over edges can cause rollovers, which may result in serious injury, death or drowning.

There is no rollover protection when the roll bar is down.

Always keep the roll bar in the raised and locked position and use the seat belt.

Read and follow the rollover protection instructions and warnings.

To avoid loss of control and possibility of rollover:

- **Do not operate near drop-offs or near water.**
- **Reduce speed and use extreme caution on slopes.**
- **Avoid sudden turns or rapid speed changes.**

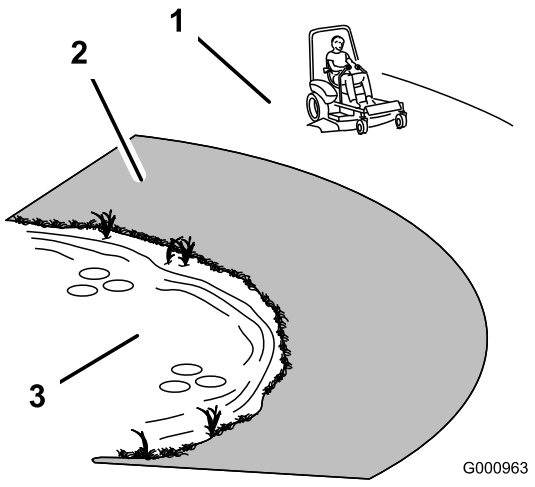

Figure 12

1. Safe Zone
2. Use walk behind mower and/or hand trimmer near drop-offs and water.
3. Water

⚠ CAUTION

This machine produces sound levels in excess of 85 dBA at the operators ear and can cause hearing loss through extended periods of exposure.

Wear hearing protection when operating this machine.

The use of protective equipment for eyes, ears, feet and head is recommended.

Operating the Parking Brake

Always set the parking brake when you stop the machine or leave it unattended.

Setting the Parking Brake

1. Move the motion control levers (Figure 17) out to the neutral locked position.
2. Pull up and back on the parking brake lever to set the parking brake (Figure 13).

   Note: The parking-brake lever should stay firmly in the engaged position.

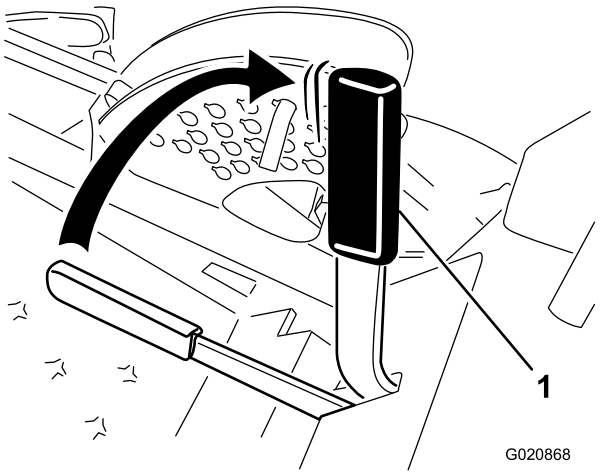

Figure 13

1. Parking-brake lever

⚠ WARNING

The parking brake may not hold the machine parked on a slope and could cause personal injury or property damage.

Do not park the machine on slopes unless the wheels are chocked or blocked.

Releasing the Parking Brake

Push forward and down on the parking brake lever to release the parking brake (Figure 14).

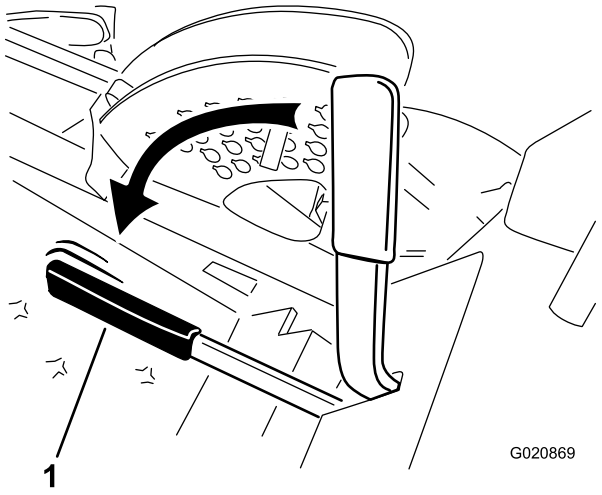

Figure 14

1. Parking-brake lever

Starting and Stopping the Engine

Starting the Engine

1. Raise the roll bar up and lock it into place, sit on the seat, and fasten the seat belt.
2. Ensure that the motion controls are in the neutral locked position.
3. Set the parking brake; refer to Setting the Parking Brake (page 23).
4. Move the PTO (power take-off) switch to the off position (Figure 15).

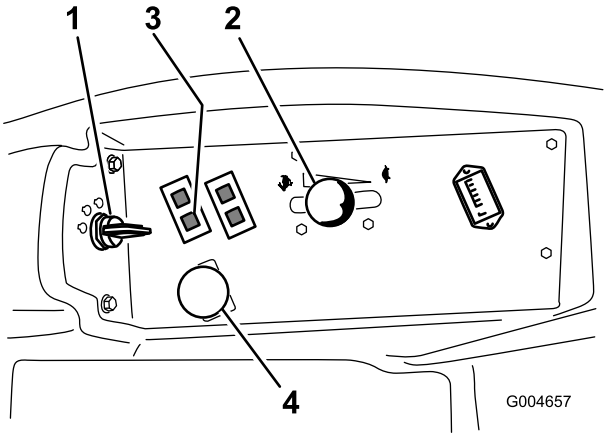

Figure 15

1. Ignition switch
2. Throttle control
3. Glow plug light
4. Power take off switch (PTO)

5. Move the throttle lever midway between the Fast and Slow positions (Figure 15).
6. Turn the ignition key clockwise to the Run position (Figure 16).

   The glow plug light will turn on for 6 seconds.

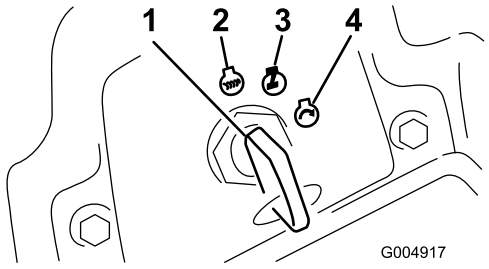

Figure 16

1. Ignition switch
2. Off
3. Run/glow plug
4. Start

7. After the glow plug indicator light goes out, turn the key to the Start position. When the engines starts release the key.

   Important: Use starting cycles of no more than 15 seconds per minute to avoid overheating the starter motor.

   Note: Additional starting cycles may be required when starting the engine for the first time after the fuel system has been completely drained.
8. Leave the throttle midway between the Slow and Fast positions until the engine and hydraulic system warm up.

   Important: When the engine is started for the first time, or after an engine oil change, or an overhaul of the engine, transmission, or wheel motor, operate the machine with the throttle lever in the Slow position in both the forward and reverse directions for 1 to 2 minutes. Also operate the lift lever and PTO lever to ensure proper operation of all parts. Then shut the engine off and check fluid levels, check for oil leaks, loose parts, and any other noticeable malfunctions.

⚠ CAUTION

Shut the engine off and wait for all moving parts to stop before checking for oil leaks, loose parts, or other malfunctions.

Stopping the Engine

1. Disengage the PTO, move the motion control levers to the neutral locked position, set the parking brake, and move the throttle lever to the Slow position.
2. Let the engine idle for 60 seconds.
3. Turn the ignition key to the Off position (Figure 16). Wait for all moving parts to stop before leaving the operating position.
4. Remove the key before transporting or storing machine.

   Important: Make sure to remove the key as the fuel pump or accessories may run and cause the battery to lose charge.

⚠ CAUTION

Children or bystanders may be injured if they move or attempt to operate the tractor while it is unattended.

Always remove the ignition key and set the parking brake when leaving the machine unattended, even if just for a few minutes.

Driving the Machine

The throttle control regulates the engine speed as measured in rpm (revolutions per minute). Place the throttle control in the Fast position for best performance. Always operate in the Fast throttle position when mowing.

⚠ CAUTION

The machine can turn very rapidly. You may lose control of it and cause personal injury or damage to machine.

- **Use caution when making turns.**
- **Slow the machine down before making sharp turns.**

1. Release the parking brake; refer to Releasing the Parking Brake (page 23).

   Note: The engine will kill if the traction control levers are moved with the parking brake engaged.
2. Move the levers to the center, unlocked position.
3. Drive the machine as follows:
   - To go straight forward, slowly push the motion control levers forward (Figure 17).
   - To go Straight backward, slowly pull the motion control levers rearward (Figure 17).
   - To turn, slow the machine by pulling back on both levers and then push forward on the lever on the opposite side from which you want to turn (Figure 17).
   - To stop, pull the motion control levers to the neutral position.

Note: The farther you move the traction control levers in either direction, the faster the machine will move in that direction.

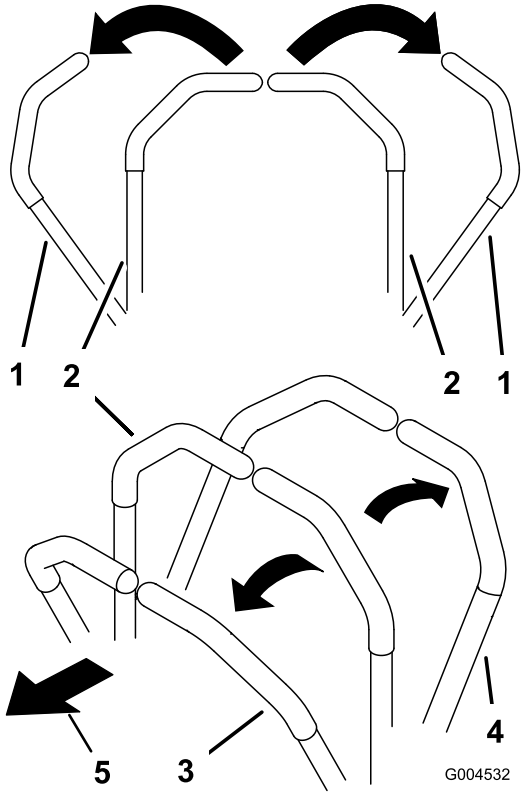

Figure 17

1. Motion control lever-neutral locked position
2. Center unlock position
3. Forward
4. Backward

Stopping the Machine

To stop the machine, move the traction-control levers to neutral and to the locked position, disengage the power take off (PTO), move the throttle to the Slow position, and stop the engine.

Set the parking brake when you leave the machine; refer to Setting the Parking Brake. Remember to remove the key from the ignition switch.

⚠ CAUTION

Children or bystanders may be injured if they attempt to move or operate the tractor while it is unattended.

Always remove the ignition key and set the parking brake when leaving the machine unattended, even if just for a few minutes.

Operating the Mower

Raising and Lowering the Mower with the Deck Lift Switch

The deck-lift switch raises and lowers the mower deck (Figure 18). The engine must be running for you to use this lever.

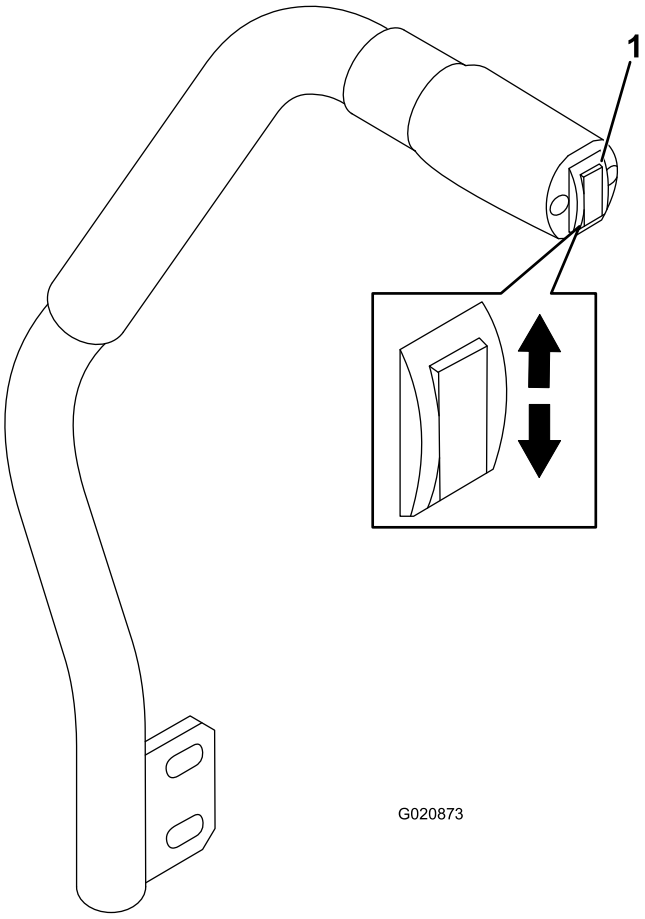

Figure 18

1. Deck-lift switch

- To lower the mower deck, push the deck-lift switch down (Figure 18).

  Important: When the mower deck is lowered, it will be set in a float/idle position.

- To raise the mover deck, push the deck-lift switch up (Figure 18).

Important: Do not continue to hold the switch up or down after the mower has fully raised or lowered. Doing so will damage the hydraulic system.

Note: To lock the mower deck in a raised position, raise the deck past the 15 cm (6 inch) position, remove the height of cut stop pin and place the pin in the 15 cm (6 inch) height-of-cut position (Figure 20).

Engaging the Power Take Off (PTO)

The power take off (PTO) switch starts and stops the mower blades and some powered attachments.

1. If the engine is cold, allow the engine to warm up 5 to 10 minutes before engaging the PTO.
2. While seated in the seat, release the pressure on the traction control levers and place them in neutral.
3. Pull up on the PTO switch to engage it (Figure 19).

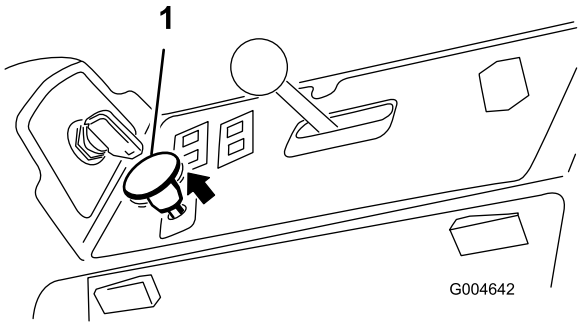

Figure 19

1. PTO switch

Disengaging the PTO

To disengage, push the PTO switch to the off position.

Adjusting the Height-of-Cut

You can adjust the height of cut from 2.5 to 15.8 cm (1 to 6 inches) in 6 mm (1/4 inch) increments by relocating the stop pin into different hole locations.

1. With the engine running, push the deck-lift switch up until the mower deck is fully raised, and **release the switch immediately** (Figure 18).
2. To adjust, rotate the stop pin until the roll pin in it lines up with the slots in the holes in the height-of-cut bracket and remove it (Figure 20).
3. Select a hole in the height-of-cut bracket corresponding to the height-of-cut desired, insert the pin, and rotate it down to lock it in place (Figure 20).

   Note: There are 4 rows of hole positions (Figure 20). The top row gives you the height of cut listed above the pin. The second row down gives you the height listed plus 6 mm (1/4 inch). The third row down gives you the height listed plus 12 mm (1/2 inch). The bottom row gives you the height listed plus 18 mm (3/4 inch). For the 15.8 cm (6 inch) position there is only one hole, located in the second row. This does not add 6 mm (1/4 inch) to the 15.8 cm (6 inch) position.

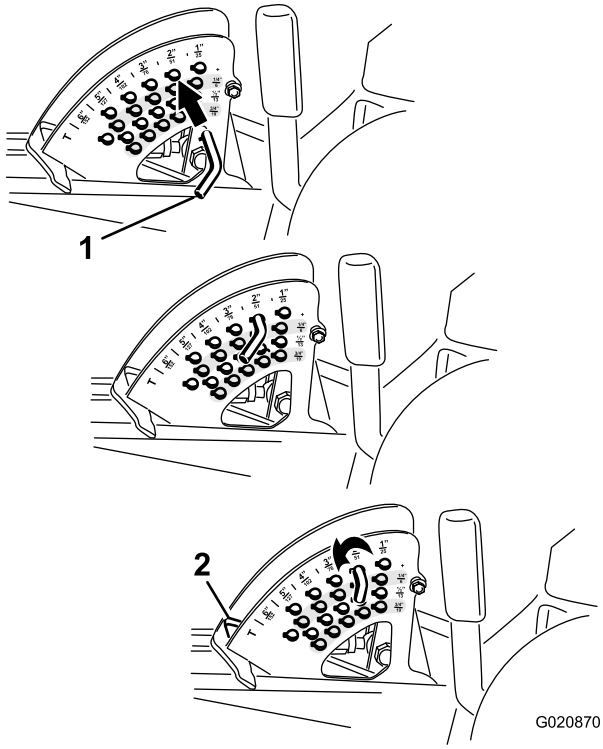

Figure 20

1. Stop pin
2. Height-of-cut stop

4. Adjust the anti-scalp rollers and skids as required.

Adjusting the Skid(s)

Mount the skids in the lower position when operating in height of cuts higher than 64 mm (2-1/2 inches) and in the higher position when operating in height of cuts lower than 64 mm (2-1/2 inches).

Note: On Guardian® mowers, when the skids become worn, you can switch the skid to the opposite sides of the mower, flipping them over. This will allow you to use the skids longer before replacing them.

1. Disengage the PTO, move the motion control levers to the neutral locked position, and set the parking brake.
2. Move the throttle lever to the Slow position, stop the engine, remove the key, and wait for all moving parts to stop before leaving the operating position.
3. Loosen the screw at the front of each skid (2 skids on Guardian decks and 1 skid on side-discharge decks).

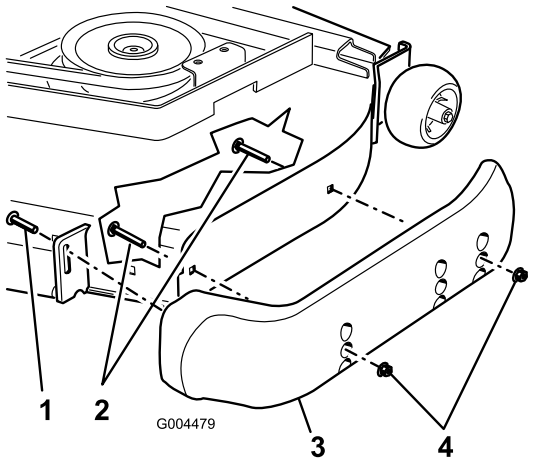

Figure 21

1. Screw
2. Flange-head bolt
3. Skid
4. Nut

4. Remove the flange-head bolts and nuts from each skid.
5. Move each skid to the desired position and secure them with the flange-head bolts and nuts.

   Note: Only use the top or center sets of holes to adjust the skids. The bottom holes are used when switching sides on a Guardian mower deck, at which time they become the top holes on the other side of the mower.
6. Torque the screw at the front of each skid to 9 to 11 N-m (80 to 100 in-lb).

Adjusting the Rear Anti-Scalp Rollers

Whenever you change the height of cut, adjust the height of the rear anti-scalp rollers.

1. Disengage the PTO, move the motion control levers to the neutral locked position and set the parking brake.
2. Move the throttle lever to the Slow position, stop the engine, remove the key, and wait for all moving parts to stop before leaving the operating position.
3. After adjusting the height of cut, adjust the rollers by removing the flange nut, bushing, spacer, and bolt (Figure 22).

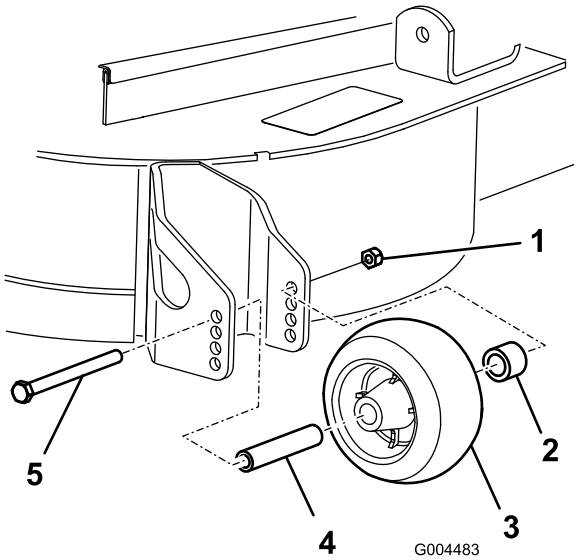

Figure 22

1. Flange nut
2. Bushing
3. Anti-scalp roller
4. Spacer
5. Bolt

4. Select a hole so the anti-scalp roller is positioned to the nearest corresponding height-of-cut desired (Figure 23).

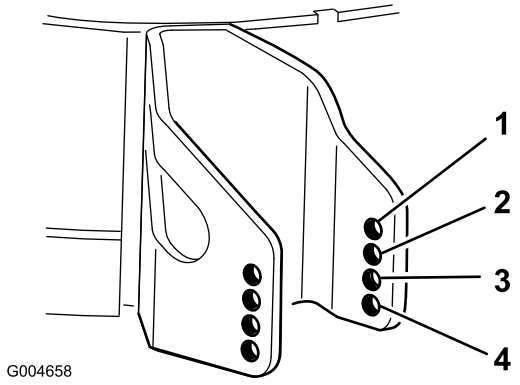

Figure 23

1. 38 mm (1-1/2 inches)
2. 51 mm (2 inches)
3. 63 mm (2-1/2 inches)
4. 76 mm (3 inches) and higher

5. Install the flange nut bushing, spacer, and bolt.

   Note: Torque to 54-61 N-m (40-45 ft-lb) (Figure 22).

Adjusting the Rollers

Mount the rollers in the lower position when operating in height of cuts higher than 64 mm (2-1/2 inches) and in the higher position when operating in heights of cut lower than 64 mm (2-1/2 inches).

1. Disengage the PTO, move the motion control levers to the neutral locked position, and set the parking brake.

2. Move the throttle lever to the Slow position, stop the engine, remove the key, and wait for all moving parts to stop before leaving the operating position.
3. Raise the front of the machine and support it on jack stands.
4. Remove the fasteners securing each roller on your mower deck, and move the rollers up or down as desired; refer to Figure 24 through Figure 28 as applicable for your mower.

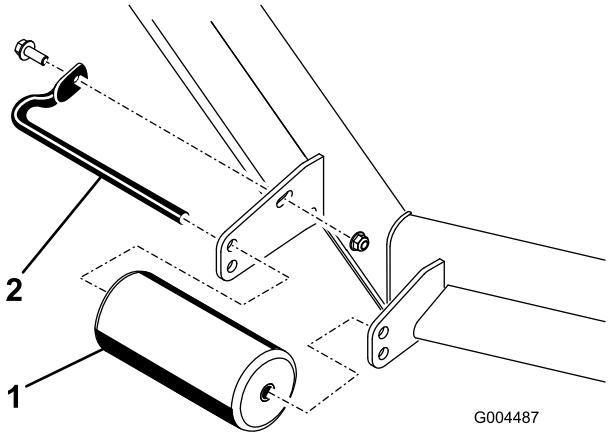

Figure 24
All mower decks

1. Front roller
2. Roller shaft

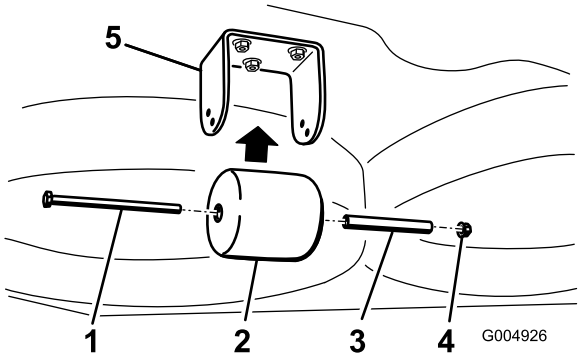

Figure 25
Guardian mower decks only

1. Bolt
2. Rear under-deck roller
3. Spacer
4. Nut
5. Bracket

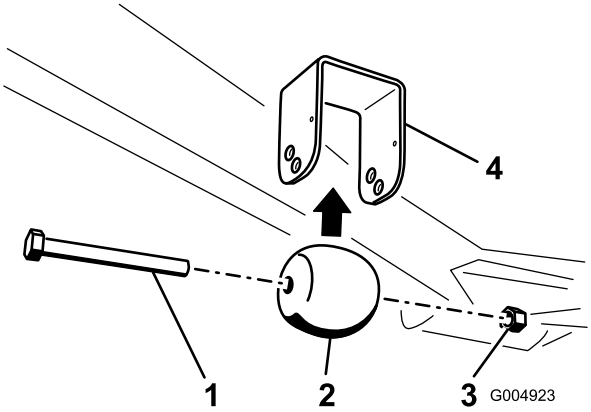

Figure 26
Guardian mower decks only

1. Bolt
2. Front under-deck roller
3. Nut
4. Bracket

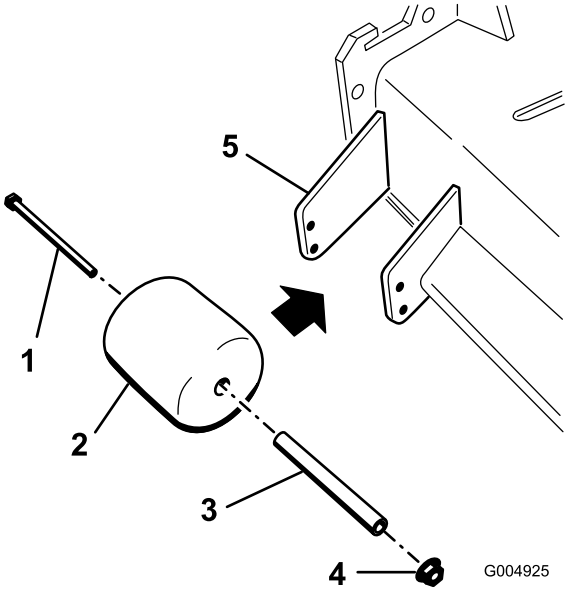

Figure 27
Side-discharge mower decks only

1. Bolt
2. Chute-side roller
3. Spacer
4. Nut
5. Bracket

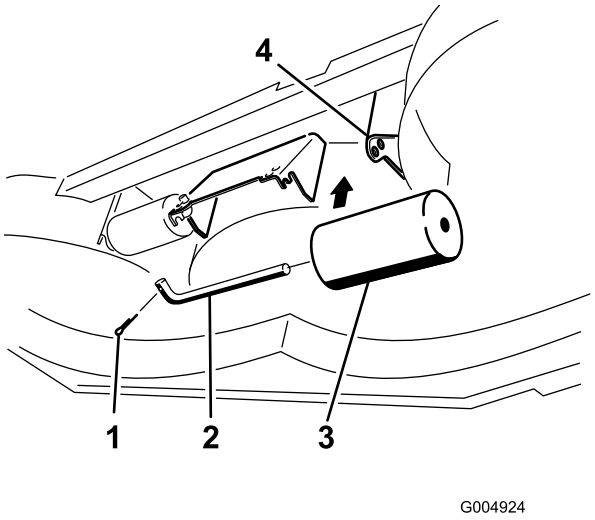

Figure 28

Side-discharge mower decks only

1. Bolt
2. Roller shaft
3. Under-deck roller (2)
4. Bracket

5. Install the fasteners as illustrated.

The Safety Interlock System

⚠ CAUTION

If the safety interlock switches are disconnected or damaged the machine could operate unexpectedly causing personal injury.

- **Do not tamper with the interlock switches.**
- **Check the operation of the interlock switches daily and replace any damaged switches before operating the machine.**

Understanding the Safety Interlock System

The safety interlock system is designed to prevent the engine from starting unless:

- You are sitting on the seat or the parking brake is engaged.
- The power take-off (PTO) is disengaged.
- The motion-control levers are in the neutral locked position
- The engine temperature is below the maximum operating temperature.

The safety interlock system also is designed to stop the engine when the traction controls are moved from the neutral locked position with the parking brake engaged. If you rise from the seat when the PTO is engaged there is a 1-second delay and then the engine stops.

Testing the Safety Interlock System

Service Interval: Before each use or daily

Test the safety interlock system before you use the machine each time. If the safety system does not operate as described below, have an Authorized Service Dealer repair the safety system immediately.

1. Sitting on the seat, engage the parking brake and move the PTO to on. Try starting the engine; the engine should not crank.
2. Sitting on the seat, engage the parking brake and move the PTO to off. Move either motion control lever (out of neutral locked position). Try starting the engine; the engine should not crank. Repeat for other control lever.
3. Sitting on the seat, engage the parking brake, move the PTO switch to off and move the motion control levers to the neutral locked position. Now start the engine. While the engine is running, release the parking brake, engage the PTO and rise slightly from the seat; the engine should stop within 2 seconds.
4. Without an operator on the seat, engage the parking brake, move the PTO switch to off and move the motion control levers to the neutral locked position. Now start the engine. While the engine is running, center either motion control; the engine should stop within 2 seconds. Repeat for the other motion control.
5. Without an operator on the seat, disengage the parking brake, move the PTO switch to off, and move the motion control levers to the neutral locked position. Try starting the engine; the engine should not crank.

Using the SCM to Diagnose System Problems

The machine is equipped with a standard control module (SCM) monitoring system that tracks the function of various key systems. The SCM is located under the right control panel. Access it through the side panel cover (Figure 29). To open the side panel cover, release the 2 latches and pull out on it.

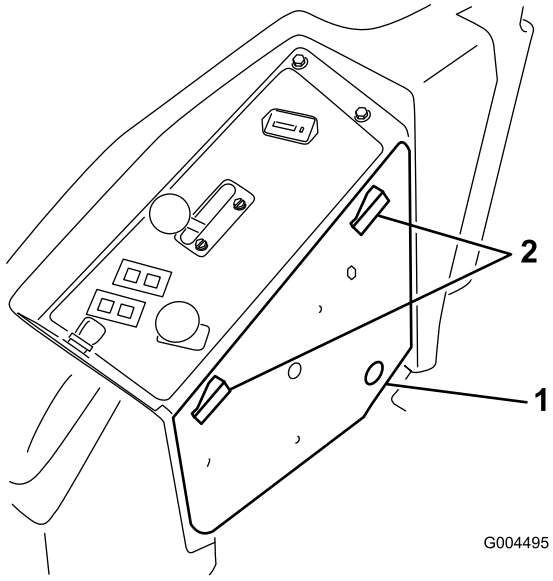

Figure 29

1. Side panel cover
2. Latches

On the face of the SCM are 11 LEDs that illuminate to indicate various system conditions. Seven of these lights can be used by the operator for system diagnosis. Refer to Figure 30 for a description of what each light means. For details on using the rest of the SCM functions, refer to the *Service Manual*, available through your Authorized Toro Distributor.

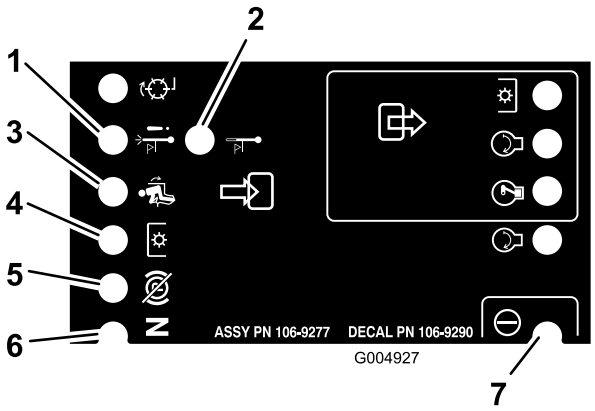

Figure 30

1. High temperature shutdown—the engine temperature has exceeded safe levels and the engine has been shut down. Check the cooling system.
2. High temperature warning—the engine temperature is approaching unsafe levels and the mower deck has been shut down. Check the cooling system.
3. Operator is in the seat
4. The PTO is On
5. The parking brake is not engaged
6. Controls are in Neutral
7. The SCM is receiving power and is operational

Positioning the Seat

Changing the Seat Position

The seat can move forward and backward. Position the seat where you have the best control of the machine and are most comfortable.

1. To adjust, move the lever sideways to unlock the seat (Figure 31).

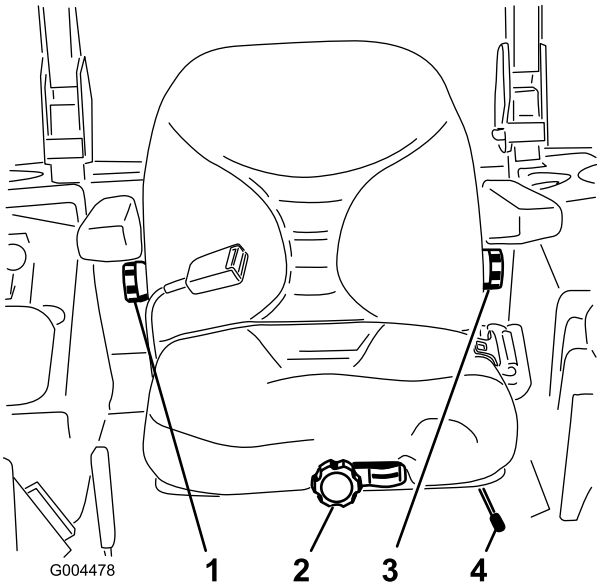

Figure 31

1. Back rest knob
2. Seat suspension knob
3. Lumbar support adjustment knob
4. Seat position adjustment lever

2. Slide the seat to the desired position and release lever to lock in position.
3. Verify that the seat has locked into place by attempting to move it back and forth.

Changing the Seat Suspension

The seat can be adjusted to provide a smooth and comfortable ride. Position the seat where you are most comfortable.

Without sitting on the seat, turn the knob in front either direction to provide the best comfort (Figure 31).

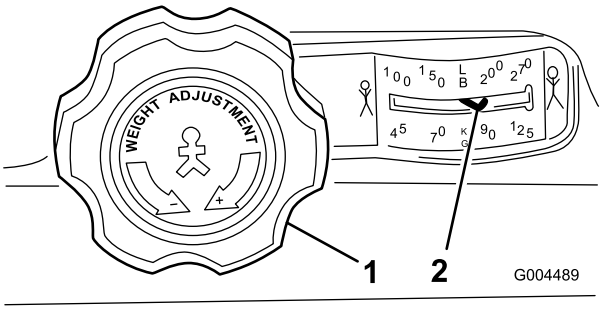

Figure 32

1. Seat suspension knob
2. Operator weight setting

Changing the Back Position

The back of the seat can be adjusted to provide a comfortable ride. Position the back of the seat where it is most comfortable.

To adjust it, turn the knob, under the right-side arm rest, in either direction to provide the best comfort (Figure 31).

Changing the Lumbar Support

The back of the seat can be adjusted to provide a customized lumbar support for your lower back.

To adjust it, turn the knob, under the left-side arm rest, in either direction to provide the best comfort (Figure 31).

Unlatching the Seat

To access the hydraulic and other systems under the seat, unlatch the seat and swing it forward.

1. Use the seat position adjustment lever to slide the seat all the way forward.
2. Pull the seat latch forward and lift up to unlatch the seat (Figure 33).

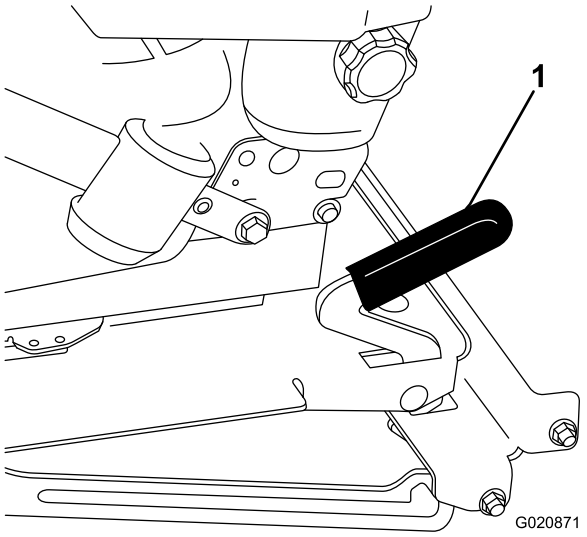

Figure 33

1. Seat latch

Pushing the Machine by Hand

Important: Never tow the machine because hydraulic damage may occur.

Pushing the Machine

1. Disengage the power take-off (PTO) and turn the ignition key to off. Move the levers to the neutral locked position and apply the parking brake. Remove the key.
2. Lift the seat.
3. Rotate each by-pass valve counterclockwise 1 turn (Figure 34).

   This allows hydraulic fluid to by-pass the pump enabling the wheels to turn.

   Important: Do not rotate the by-pass valves more than 1 turn. This prevents valves from coming out of the body and causing fluid to run out.

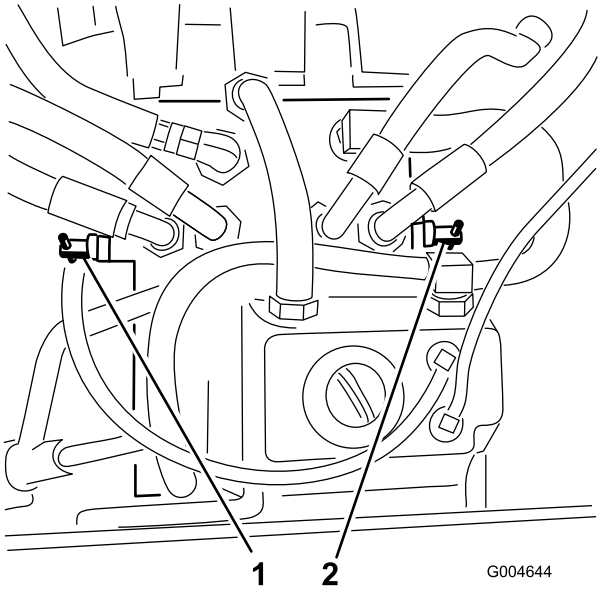

Figure 34

1. Right by-pass valve
2. Left by-pass valve

4. Disengage the parking brake before pushing.

Changing to Machine Operation

Rotate each by-pass valve clockwise 1 turn and hand tighten them (torque of approximately 8 N-m (71 in-lb) (Figure 34).

Note: Do not over tighten the by-pass valves.

The machine will not drive unless the by-pass valves are turned inward.

Loading Machines

Use extreme caution when loading units on trailers or trucks. One full-width ramp that is wide enough to extend beyond the rear tires is recommended instead of individual ramps for

each side of the unit (Figure 35). The lower rear section of the tractor frame extends back between the rear wheels and serves as a stop for tipping backward. Having a full-width ramp provides a surface for the frame members to contact if the unit starts to tip backward. If it is not possible to use one full-width ramp, use enough individual ramps to simulate a full-width continuous ramp.

The ramp should be long enough so that the angles do not exceed 15 degrees (Figure 35). A steeper angle may cause mower components to get caught as the unit moves from ramp to trailer or truck. Steeper angles may also cause the unit to tip backward. If loading on or near a slope, position the trailer or truck so it is on the down side of the slope and the ramp extends up the slope. This will minimize the ramp angle. The trailer or truck should be as level as possible.

Important: Do not attempt to turn the unit while on the ramp; you may lose control and drive off the side.

Avoid sudden acceleration when driving up a ramp and sudden deceleration when backing down a ramp. Both maneuvers can cause the unit to tip backward.

⚠ WARNING

Loading a unit onto a trailer or truck increases the possibility of backward tip-over and could cause serious injury or death.

- **Use extreme caution when operating a unit on a ramp.**
- **Use only a single, full-width ramp; Do not use individual ramps for each side of the unit.**
- **If individual ramps must be used, use enough ramps to create an unbroken ramp surface wider than the unit.**
- **Do not exceed a 15 degree angle between ramp and ground or between ramp and trailer or truck.**
- **Avoid sudden acceleration while driving unit up a ramp to avoid tipping backward.**
- **Avoid sudden deceleration while backing unit down a ramp to avoid tipping backward.**

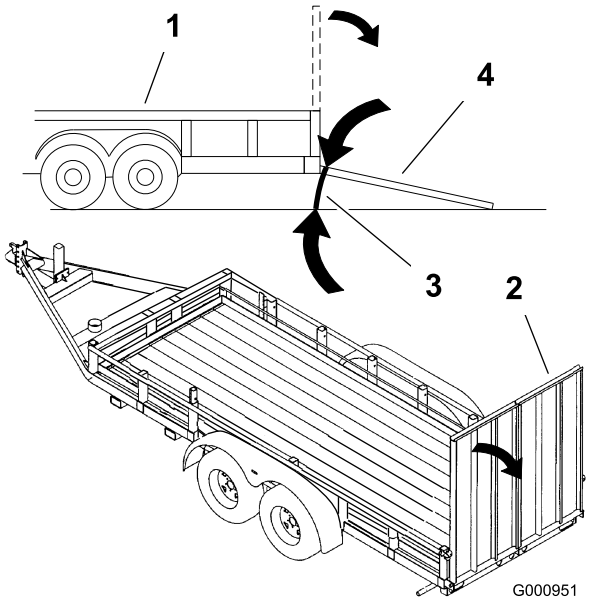

Figure 35

1. Trailer
2. Full-width ramp
3. Not greater than 15 degrees
4. Full-width ramp—side view

Transporting Machines

⚠ WARNING

Driving on the street or roadway without turn signals, lights, reflective markings, or a slow moving vehicle emblem is dangerous and can lead to accidents causing personal injury.

Do not drive machine on a public street or roadway without signs, lights, and/or markings required by local regulations.

Use a heavy-duty trailer or truck to transport the machine. Ensure that the trailer or truck has all necessary lighting and marking as required by law. Please carefully read all the safety instructions. Knowing this information could help you or bystanders avoid injury.

To transport the machine:

- Ensure that your vehicle, hitch, safety chains, and trailer are adequate for the load you are pulling and that they meet all local traffic regulations for your area.
- Lock the brake and block the wheels.
- Securely fasten the machine to the trailer or truck with straps, chains, cable, or ropes as required by local traffic regulations in your area (Figure 36).

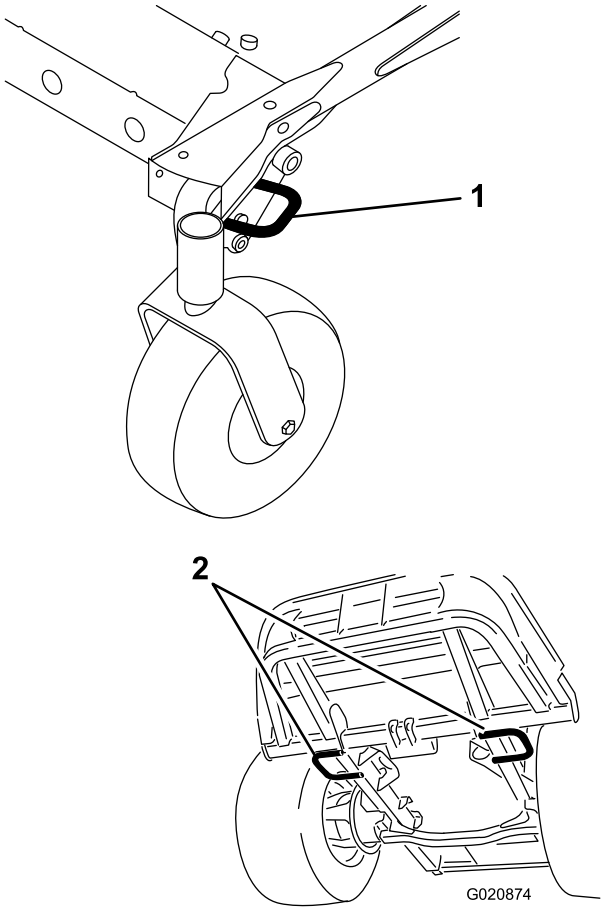

Figure 36

1. Front tie-down (left side shown)
2. Rear tie-downs

Operating Tips

Fast Throttle Setting/Ground Speed

To maintain enough power for the machine and deck while mowing, operate the engine at the fast throttle position and adjust your ground speed for conditions. A good rule to follow is to decrease ground speed as the load on the cutting blades increases; and increase ground speed as the load on the blades decreases.

Mowing Direction

Alternate mowing direction to avoid making ruts in the turf over time. This also helps disperse clippings, which enhances decomposition and fertilization.

Cutting Speed

To improve cut quality, use a slower ground speed in certain conditions.

Avoid Cutting Too Low

If the cutting width of the mower is wider than the mower you previously used, raise the cutting height to ensure that uneven turf is not cut too short.

Select the Proper Height-of-Cut Setting

Remove approximately 25 mm (1 inch) or no more than 1/3 of the grass blade when cutting. In exceptionally lush and dense grass, you may have to slow down the forward speed and/or raise the height-of-cut to the next higher setting.

Important: If cutting more that 1/3 of the grass blade off, or in sparse long grass or dry conditions, the use of flat sail blades is recommended to reduce air-borne chaff, debris, and deck drive component strain.

Cutting Long Grass

If the grass is ever allowed to grow slightly longer than normal, or if it contains a high degree of moisture, raise the cutting height higher than usual and cut the grass at this setting. Then cut the grass again using the lower, normal setting.

Keeping the Mower Clean

Clean clippings and dirt from the underside of the mower after each use. If grass and dirt build up inside the mower, cutting quality will eventually become unsatisfactory.

To reduce the risk of fire hazard, keep the engine, muffler, battery compartment, parking brake, cutting units, and fuel storage compartment free of grass, leaves, or excessive grease. Clean up any spilled oil or fuel.

Maintaining the Blade

Maintain a sharp blade throughout the cutting season because a sharp blade cuts cleanly without tearing or shredding the grass blades. Tearing and shredding turns grass brown at the edges, which slows growth and increases the chance of disease. Check the blades daily for sharpness, and for any wear or damage. Sharpen the blades as necessary. If a blade is damaged or worn, replace it immediately with a genuine Toro replacement blade.

Maintenance

Note: Determine the left and right sides of the machine from the normal operating position.

Recommended Maintenance Schedule(s)

Maintenance Service Interval	Maintenance Procedure
After the first 10 hours	• Torque the frame mounting bolts. • Torque wheel lug nuts.
After the first 50 hours	• Change the mower deck gear box lubricant. • Change the engine oil and filter.
After the first 200 hours	• Change the hydraulic oil and filter.
Before each use or daily	• Test the safety system. • Check the engine oil level. • Check the engine coolant level. • Clean the radiator with compressed air (do not use water). • Check the hydraulic fluid level. • Clean the mower deck.
Every 50 hours	• Grease the bearing and bushing grease fittings. • Check battery cable connections. • Check the tire pressure.
Every 100 hours	• Check the alternator belt tension.
Every 150 hours	• Check the lubricant in the mower deck gear box. • Change the engine oil and filter.
Every 200 hours	• Inspect cooling system hoses and seals. Replace them if cracked or torn. • Torque wheel lug nuts.
Every 400 hours	• Change the mower deck gear box lubricant. • Service the air cleaner. • Replace the fuel filter canister for the water separator. • Drain water or other contaminants from the water separator. • Check the fuel lines and connections.
Every 800 hours	• Change the hydraulic oil and filter. • Inspect engine valve clearance. Refer to your Engine Operator's Manual.
Every 1,500 hours	• Replace moving hoses.
Every 2 years	• Drain and clean the fuel tank. • Flush and replace cooling system fluid.

Important: **Refer to your *Engine Operator's Manual* for additional maintenance procedures. A detailed Service Manual is also available for purchase from your Authorized Toro Distributor.**

Daily Maintenance Checklist

Duplicate this page for routine use.

Maintenance Check Item	For the week of:						
	Mon.	Tues.	Wed.	Thurs.	Fri.	Sat.	Sun.
Check Safety Interlock Operation							
Check Grass Deflector in Down Position (if applicable)							
Check Parking Brake Operation							
Check Fuel Level							
Check Hydraulic Oil Level							
Check Engine Oil Level							
Check Cooling System Fluid Level							
Check Drain Water/Fuel Separator							
Check Air Filter Restriction Indicator[3]							
Check Radiator & Screen for Debris							
Check Unusual Engine Noises[1]							
Check Unusual Operating Noises							
Check Hydraulic Hoses for Damage							
Check Fluid Leaks							
Check Tire Pressure							
Check Instrument Operation							
Check Condition of Blades							
Lubricate All Grease Fittings[2]							
Touch-up Damaged Paint							

1. Check glow plug and injector nozzles, if hard starting, excess smoke or rough running is noted.
2. Immediately after every washing, regardless of the interval listed.
3. If indicator shows red

Notation for Areas of Concern		
Inspection performed by:		
Item	Date	Information

⚠ CAUTION

If you leave the key in the ignition switch, someone could accidently start the engine and seriously injure you or other bystanders.

Remove the key from the ignition before you do any maintenance.

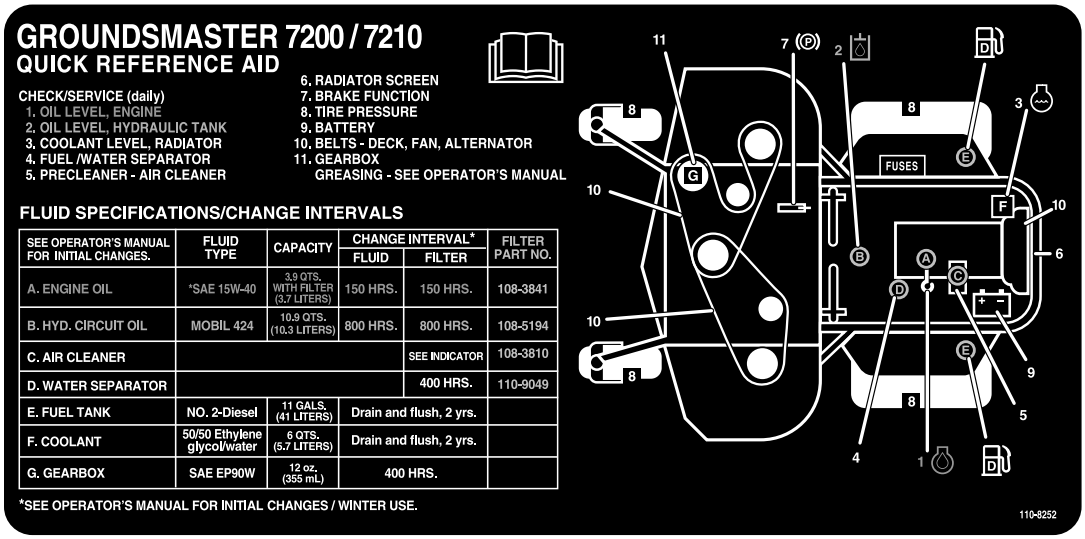

SEE OPERATOR'S MANUAL FOR INITIAL CHANGES.	FLUID TYPE	CAPACITY	CHANGE INTERVAL*		FILTER PART NO.
			FLUID	FILTER	
A. ENGINE OIL	*SAE 15W-40	3.9 QTS. WITH FILTER (3.7 LITERS)	150 HRS.	150 HRS.	108-3841
B. HYD. CIRCUIT OIL	MOBIL 424	10.9 QTS. (10.3 LITERS)	800 HRS.	800 HRS.	108-5194
C. AIR CLEANER				SEE INDICATOR	108-3810
D. WATER SEPARATOR				400 HRS.	110-9049
E. FUEL TANK	NO. 2-Diesel	11 GALS. (41 LITERS)	Drain and flush, 2 yrs.		
F. COOLANT	50/50 Ethylene glycol/water	6 QTS. (5.7 LITERS)	Drain and flush, 2 yrs.		
G. GEARBOX	SAE EP90W	12 oz. (355 mL)	400 HRS.		

*SEE OPERATOR'S MANUAL FOR INITIAL CHANGES / WINTER USE.

Figure 37
Service Interval Chart

Premaintenance Procedures

Important: The fasteners on the covers of this machine are designed to remain on the cover after removal. Loosen all of the fasteners on each cover a few turns so that the cover is loose but still attached, then go back and loosen them until the cover comes free. This will prevent you from accidentally stripping the bolts free of the retainers.

Lubrication

Greasing the Bearings and Bushings

Service Interval: Every 50 hours

The machine has grease fittings that must be lubricated regularly with No. 2 general-purpose, lithium-based grease. If the machine is operated under normal conditions, lubricate all bearings and bushings after every 50 hours of operation. Lubricating bearings and bushings daily when operating conditions are extremely dusty and dirty. Dusty and dirty operating conditions could cause dirt to get into the bearings and bushings, resulting in accelerated wear. Lubricate the grease fittings immediately after every washing, regardless of interval specified.

1. Wipe the grease fittings clean so that foreign matter cannot be forced into the bearing or bushing.
2. Pump grease into the fittings.
3. Wipe off excess grease.

Note: Bearing life can be negatively affected by improper wash down procedures. Do not wash down the unit when it is still hot and avoid directing high-pressure or high volume spray at the bearings or seals.

Servicing the Mower-Deck Gear Box Lubricant

The gear box is designed to operate with SAE EP90W gear lube. Although the gear box comes from the factory with lubricant, check the level of the lubricant in the cutting unit before operating it and as recommended in the Daily Maintenance Checklist (page 35).

Checking the Mower Deck Gear Box Lubricant

Service Interval: Every 150 hours

1. Position the machine and cutting unit on a level surface.
2. Lower the mower deck to the 2.5 cm (1 inch) height of cut.
3. Disengage the PTO, move the motion control levers to the neutral locked position, and set the parking brake.
4. Move the throttle lever to the Slow position, stop the engine, remove the key, and wait for all moving parts to stop before leaving the operating position.
5. Lift the footrest, exposing the top of the mower deck.
6. Remove the dipstick/fill plug from the top of the gear box (Figure 38) and make sure that the lubricant is between the marks on the dipstick.

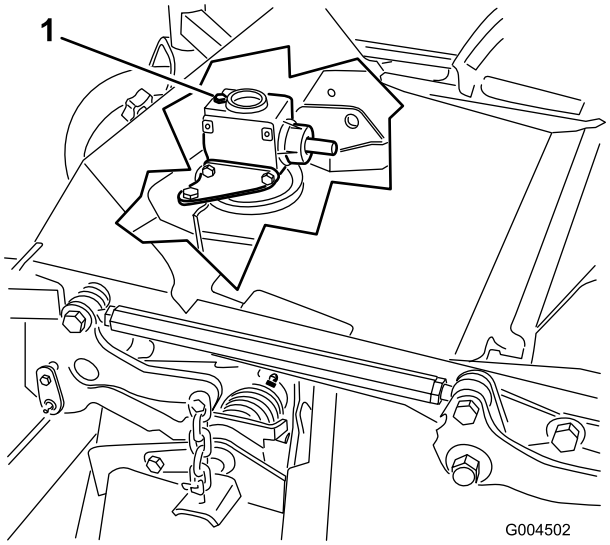

Figure 38

1. Fill plug and dipstick

7. If the lubricant level is low, add enough lubricant until the level is between the marks on the dipstick.

   Note: Do not over fill gearbox; over filling the gear box may damage it.

Changing the Mower Deck Gear Box Lubricant

Service Interval: After the first 50 hours

Every 400 hours

1. Position the machine and cutting unit on a level surface.
2. Lower the mower deck to the 2.5 cm (1 inch) height of cut.
3. Disengage the PTO, move the motion control levers to the neutral locked position, and set the parking brake.
4. Move the throttle lever to the Slow position, stop the engine, remove the key, and wait for all moving parts to stop before leaving the operating position.
5. Lift the footrest, exposing the top of the mower deck.
6. Remove the dipstick/fill plug from the top of the gear box (Figure 38).
7. Place a funnel and drain pan under the drain plug located under the front of the gear box and remove the plug, draining the lubricant into the pan.
8. Replace the drain plug.
9. Add enough lubricant, approximately 283 ml (12 oz), until the level is between the marks on the dipstick.

   Note: Do not over fill gearbox; over filling the gear box may damage it.

Engine Maintenance

Checking the Air Cleaner

1. Check the air cleaner body for damage, which could possibly cause an air leak. Replace a damaged air cleaner body. Check the whole clean air intake system for leaks, damage, or loose hose clamps.
2. Service the air cleaner filter when the air cleaner indicator (Figure 39) shows red or every 400 hours (more frequently in extremely dusty or dirty conditions). Do not over service the air filter.

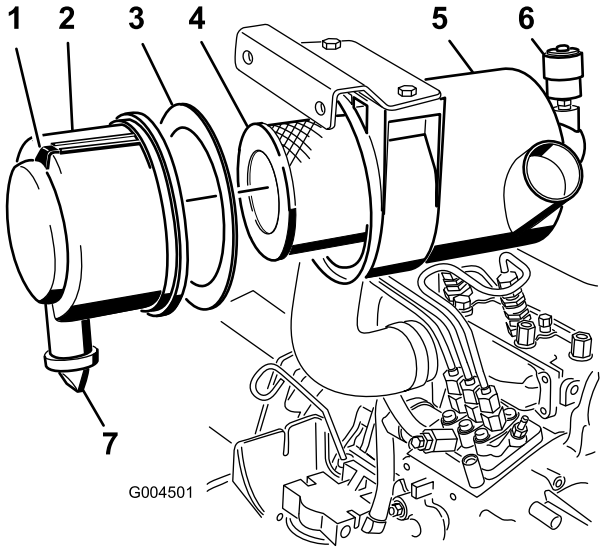

Figure 39

1. Air cleaner cover
2. Gasket
3. Filter
4. Air cleaner body
5. Air cleaner indicator
6. Air cleaner latch
7. Rubber outlet valve

3. Be sure the cover is seated correctly and seals with the air cleaner body.

Servicing the Air Cleaner

Service Interval: Every 400 hours

1. Pull the latch outward and rotate the air-cleaner cover counter-clockwise (Figure 39).
2. Remove the cover from the air-cleaner body (Figure 39).
3. Before removing the filter, use low pressure air (40 psi, clean and dry) to help remove large accumulations of debris packed between outside of primary filter and the canister.

   This cleaning process prevents debris from migrating into the intake when the primary filter is removed.

   Important: Avoid using high-pressure air which could force dirt through the filter into the intake tract.
4. Remove and replace the primary filter (Figure 39).

   Important: Do not clean the used element to avoid damage to the filter media.
5. Inspect the new filter for shipping damage, checking the sealing end of the filter and the body.

   Important: Do not use a damaged element.
6. Ensure that the foam gasket is in place in the cover and that it is not torn or damaged (Figure 39).

   Note: If it is damaged, replace it.
7. Insert the new filter by applying pressure to the outer rim of the element to seat it in the canister.

   Important: Do not apply pressure to the flexible center of the filter.
8. Clean the dirt ejection port (located in the removable cover) as follows:
   A. Remove the rubber outlet valve from the cover (Figure 39).
   B. Clean the cavity.
   C. Replace the outlet valve.
9. Install the cover orienting the rubber outlet valve in a downward position—between approximately 5:00 to 7:00 when viewed from the end.
10. Reset the indicator (Figure 39) if showing red.

Servicing the Engine-Oil

Checking the Engine-Oil Level

Service Interval: Before each use or daily

The engine is shipped with oil in the crankcase; however, the oil level must be checked before and after the engine is first started. Check oil level before each day's operation or each time you use the machine.

The crankcase capacity is approximately 3.8 liters (4 quarts) with the filter. Use high-quality engine oil that meets the following specifications:

- API Classification Level Required: CH-4, CI-4 or higher.
- Preferred oil: SAE 15W-40 (above 0°F (-17°C)
- Alternate oil: SAE 10W-30 or 5W-30 (all temperatures)

Note: Toro Premium Engine oil is available from your distributor in either 15W-40 or 10W-30 viscosity. See the parts catalog for part numbers.

1. Park the machine on a level surface, lower the mower deck, move the throttle lever to the Slow position, stop the engine, and remove the key from the ignition switch.
2. Open the hood.

3. Remove the dipstick (Figure 40), wipe it clean, and install the dipstick. Remove the dipstick and check the oil level.

   The oil level should be up to the Full mark on the dipstick.

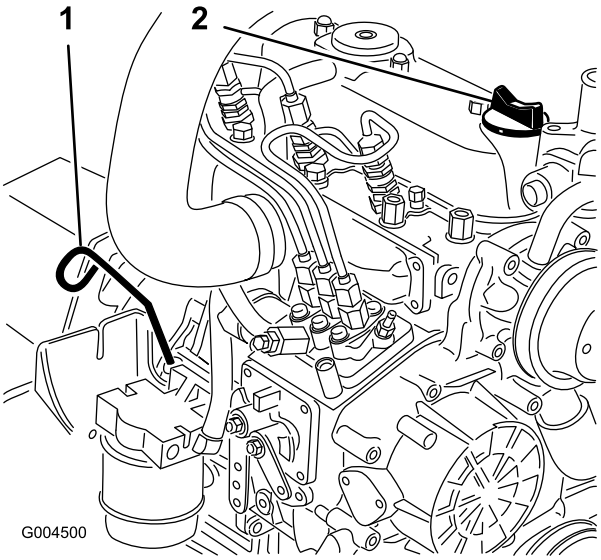

Figure 40

1. Dipstick 2. Oil fill

4. If the oil level is below the Full mark, remove the fill cap (Figure 40) and add oil until the level reaches the Full mark on the dipstick.

   Important: Do not overfill.

   Note: Use a clean funnel to prevent spills.

5. Install the oil fill cap.
6. Close the hood.

Changing the Engine Oil And Filter

Service Interval: After the first 50 hours

Every 150 hours

Change the oil and filter initially after first 50 hours of operation and then every 150 hours of operation thereafter. If possible, run the engine just before changing the oil because warm oil flows better and carries more contaminants than cold oil.

1. Position the machine on a level surface.
2. Open the hood.
3. Set a drain pan under the oil pan and in line with the drain plug (Figure 41).

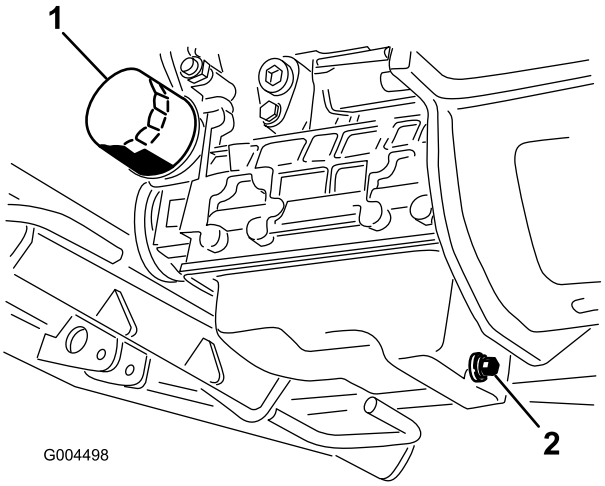

Figure 41

1. Oil filter 2. Drain plug

4. Clean the area around the drain plug.
5. Remove the drain plug and allow the oil to flow into drain pan.
6. Remove and replace the oil filter (Figure 41).
7. After the oil is drained, install the drain plug and wipe up any oil that is spilled.
8. Fill the crankcase with oil; refer to Checking the Engine Oil Level.

Fuel System Maintenance

⚠ DANGER

Under certain conditions, diesel fuel and fuel vapors are highly flammable and explosive. A fire or explosion from fuel can burn you and others and can cause property damage.

- **Use a funnel and fill the fuel tank outdoors, in an open area, when the engine is off and is cold. Wipe up any fuel that spills.**
- **Do not fill the fuel tank completely full. Add fuel to the fuel tank until the level is to the bottom of the filler neck.**
- **Never smoke when handling fuel, and stay away from an open flame or where fuel fumes may be ignited by a spark.**
- **Store fuel in a clean, safety-approved container and keep the cap in place.**

Servicing the Water Separator

Service Interval: Every 400 hours

Every 400 hours

Drain water or other contaminants from water separator (Figure 42) daily.

1. Place a clean container under the fuel filter.
2. Loosen the drain plug on the bottom of the filter canister.

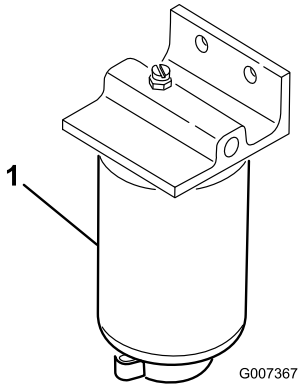

Figure 42

1. Water separator filter canister

3. Clean the area where the filter canister mounts.
4. Remove the filter canister and clean the mounting surface.
5. Lubricate the gasket on the filter canister with clean oil.
6. Install the filter canister by hand until the gasket contacts mounting surface, then rotate it an additional 1/2 turn.
7. Tighten the drain plug on the bottom of the filter canister.

Cleaning the Fuel Tank

Service Interval: Every 2 years

Drain and clean fuel tank every 2 years. Also, remove and clean the in-line strainers after draining the tank. Use clean diesel fuel to flush out the tank.

Important: Drain and clean the tank if the fuel system becomes contaminated or if the machine is to be stored for an extended period.

Fuel Lines and Connections

Service Interval: Every 400 hours

Check the fuel lines and connections. Inspect them for deterioration, damage, chaffing, or loose connections.

Bleeding the Fuel System

1. Park the machine on a level surface. Ensure that the fuel tank is at least half full.
2. Unlatch and raise the hood.
3. Place a rag under the air-bleed screw on the fuel-injection pump and open it (Figure 43).

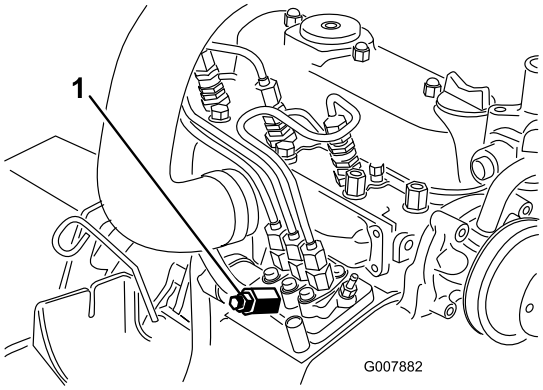

Figure 43

1. Fuel-injection pump bleed screw

4. Turn the key in the ignition switch to the On position.

   The electric fuel pump will begin operation, thereby forcing air out around the air bleed screw.

⚠ CAUTION

The engine may start during this procedure. Moving fans and belts in a running engine can severely injure you or bystanders.

Keep hands, fingers, loose clothing/jewelry, and hair away from the engine fan and belt during this procedure.

5. Leave the key in the On position until a solid stream of fuel flows out around the screw.
6. Tighten the screw and turn key to the Off position.

Note: Normally, the engine should start after above bleeding procedures are followed. However, if engine does not start, air may be trapped between injection pump and injectors; refer to Bleeding Air from the Injectors (page 41).

Bleeding Air from the Injectors

Note: Use this procedure only if the fuel system has been purged of air through normal priming procedures and engine will not start; refer to Bleeding the Fuel System (page 40).

1. Place a rag under the pipe connection coming from the injection pump to the No. 1 injector nozzle as illustrated in Figure 44.

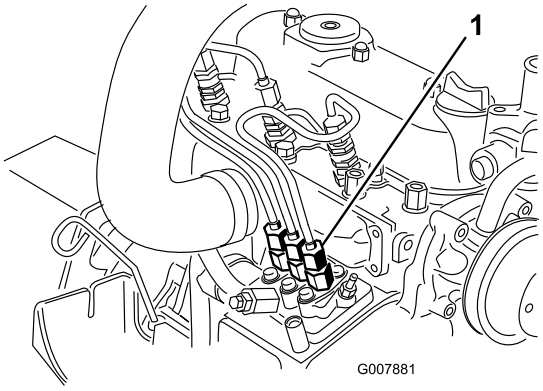

Figure 44

1. Pipe connection from the injection pump to the No. 1 injector nozzle

2. Move the throttle to the Fast position.
3. Turn the ignition key the Start position, and watch the fuel flow around the connector.

⚠ CAUTION

The engine may start during this procedure. Moving fans and belts in a running engine can severely injure you or bystanders.

Keep hands, fingers, loose clothing/jewelry, and hair away from the engine fan and belt during this procedure.

4. Tighten the pipe connector securely when it attains a solid flow.
5. Turn the key to the Off position.
6. Repeat this procedure for the remaining nozzles.

Electrical System Maintenance

Important: Whenever working with the electrical system, always disconnect the battery cables, negative (-) cable first, to prevent possible wiring damage from short-outs.

Servicing the Battery

Service Interval: Every 50 hours

WARNING

CALIFORNIA
Proposition 65 Warning

Battery posts, terminals, and related accessories contain lead and lead compounds, chemicals known to the State of California to cause cancer and reproductive harm. Wash hands after handling.

Keep the top of the battery clean. If you store the machine in a location where temperatures are extremely high, the battery will run down more rapidly than if the machine is stored in a location where the temperature is cool.

Keep the top of the battery clean by washing it periodically with a brush dipped in ammonia or bicarbonate of soda solution. Flush the top surface with water after cleaning it. Do not remove the fill caps while cleaning the battery.

The battery cables must be tight on the terminals to provide good electrical contact.

If corrosion occurs at the terminals, disconnect the cables, negative (-) cable first, and scrape the clamps and terminals separately. Connect the cables, positive (+) cable first, and coat the terminals with petroleum jelly.

⚠ WARNING

Battery terminals or metal tools could short against metal machine components causing sparks. Sparks can cause the battery gasses to explode, resulting in personal injury.

- **When removing or installing the battery, do not allow the battery terminals to touch any metal parts of the machine.**
- **Do not allow metal tools to short between the battery terminals and metal parts of the machine.**

⚠ WARNING

Incorrect battery cable routing could damage the machine and cables causing sparks. Sparks can cause the battery gasses to explode, resulting in personal injury.

- **Always disconnect the negative (black) battery cable before disconnecting the positive (red) cable.**
- **Always connect the positive (red) battery cable before connecting the negative (black) cable.**

Storing the Battery

If the machine will be stored more than 30 days, remove the battery and charge it fully. Either store it on a shelf or on the machine. Leave the cables disconnected if it is stored on the machine. Store the battery in a cool environment to prevent the battery from discharging rapidly. To prevent the battery from freezing, make sure it is fully charged. The specific gravity of a fully charged battery is 1.265 to 1.299.

Checking the Fuses

The fuses are located under the control panel. Access them through the side panel cover (Figure 45). To open the side panel cover, release the 2 latches and pull out on it.

If the machine stops or has other electrical system issues, check the fuses. Grasp each fuse in turn and remove them one at a time, checking to see if any are blown. If you need to replace a fuse, always use the **same type and amperage rated fuse** as the one you are replacing, **otherwise you could damage the electrical system** (refer to the decal next to the fuses (Figure 46) for a diagram of each fuse and its amperage).

Note: If a fuse blows frequently, you probably have a short in the electrical system and should have it serviced by a qualified service technician.

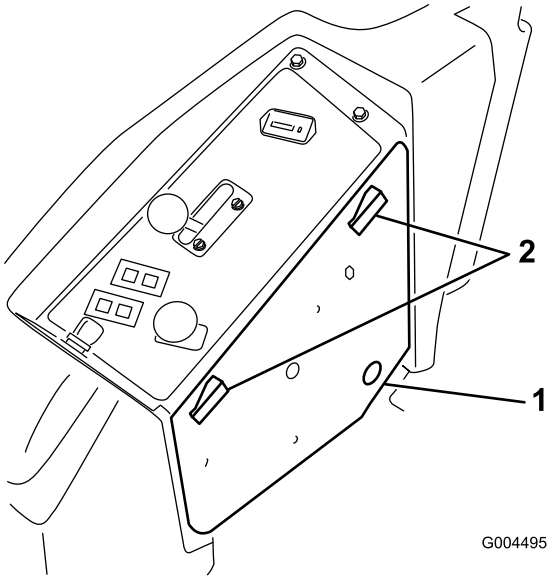

Figure 45

1. Side panel cover
2. Latches

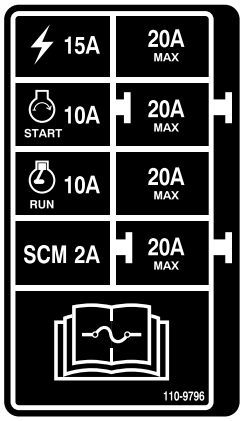

Figure 46

Drive System Maintenance

Checking the Tire Pressure

Service Interval: Every 50 hours

Check the pressure after every 50 operating hours or monthly, whichever occurs first (Figure 47).

Maintain the air pressure in the front and rear tires. The correct air pressure is 124 kPa (18 psi) in the rear tires and 172 kPa (25 psi) in the caster wheels. Uneven tire pressure can cause an uneven cut. Check the tires when they are cold to get the most accurate pressure reading.

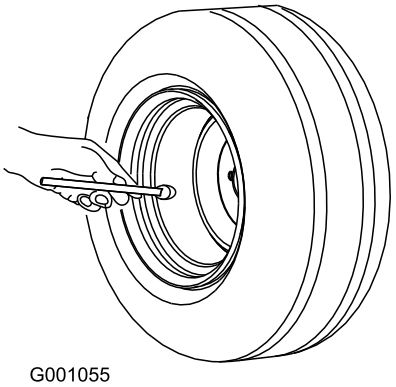

Figure 47

Replacing the Caster Wheels and Bearings

1. Obtain a new caster wheel assembly, cone bearings, and bearing seals from your Authorized Toro Distributor.
2. Remove the locknut from the bolt holding the caster wheel assembly between the caster fork (Figure 48).

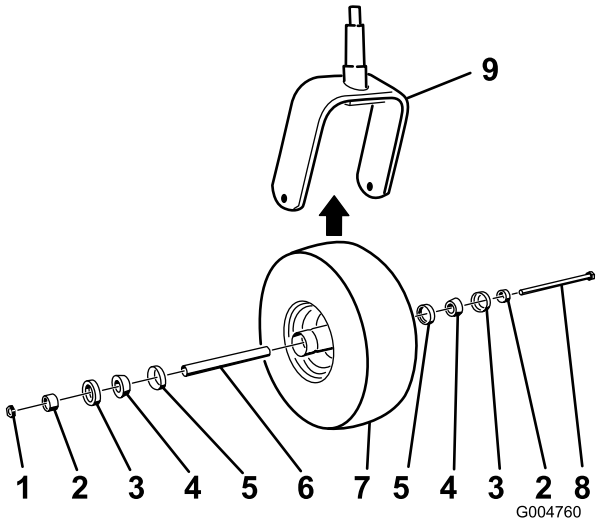

Figure 48

1. Nut
2. Bearing spacer
3. Outer bearing seal
4. Cone bearing
5. Inner bearing seal
6. Spacer
7. Caster wheel
8. Axle bolt
9. Caster fork

3. Grasp the caster wheel, and slide the bolt out of the fork or pivot arm.
4. Discard the old caster wheel and bearings.
5. Assemble the caster wheel by pushing the cone bearings and seals, packed with grease, into the wheel hub, positioned as shown in Figure 48.
6. Slide the spacer into the wheel hub through the bearings, captivating the spacer inside the wheel hub with 2 bearing spacers.

   Important: Ensure that the seal lips are not folded inward.
7. Install the caster-wheel assembly between the castor fork and secure it in place with the bolt and locknut.
8. Tighten the nut until the wheel no longer spins freely, then back it off just until the wheel spins freely.
9. Attach a grease gun to the grease fitting on the caster wheel and fill it with No. 2 general-purpose, lithium-based grease.

Cooling System Maintenance

⚠ DANGER

Discharging hot pressurized coolant or touching hot radiator and surrounding parts can cause severe burns.

- **Do not remove the radiator cap when the engine is hot. Always allow the engine to cool at least 15 minutes or until the radiator cap is cool enough to touch without burning your hand before removing the radiator cap.**
- **Do not touch radiator and surrounding parts that are hot.**

⚠ DANGER

The rotating fan and drive belt can cause personal injury.

- **Do not operate the machine without the covers in place.**
- **Keep fingers, hands and clothing clear of rotating fan and drive belt.**
- **Shut off the engine and remove the ignition key before performing maintenance.**

⚠ CAUTION

Swallowing engine coolant can cause poisoning.

- **Do not swallow engine coolant.**
- **Keep out of reach from children and pets.**

Checking the Cooling System

Service Interval: Before each use or daily

The cooling system is filled with a 50/50 solution of water and permanent ethylene glycol anti freeze. Check the level of the coolant in the expansion tank at the beginning of each day before starting the engine. The capacity of the cooling system is 7.5 liters (6 quarts).

1. Check the level of the coolant in the expansion tank (Figure 49). The coolant level should be between the marks on the side of the tank.

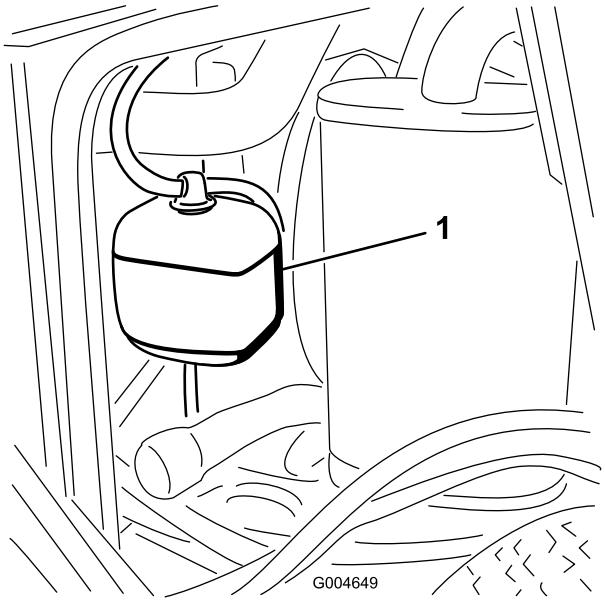

Figure 49

1. Expansion tank

2. If coolant level is low, remove the expansion tank cap and replenish the system. **Do not overfill**.
3. Install the expansion tank cap.

Cleaning the Radiator

Service Interval: Before each use or daily

Every 1,500 hours

Every 200 hours

Every 2 years

To prevent the engine from overheating, the radiator must be kept clean. Normally, check the radiator daily and, if necessary, clean any debris off these parts. However, it will be necessary to check and clean the radiator frequently in extremely dusty and dirty conditions.

Note: If the mower deck or engine shuts off due to overheating, first check the radiator for excessive buildup of debris.

Clean the radiator as follows:

1. Open the hood.
2. Working from the fan side of the radiator, blow out debris with low pressure (50 psi) compressed air **(do not use water)**. Repeat the step from the front of the radiator and again from the fan side.
3. After the radiator is thoroughly cleaned, clean out debris that may have collected in the channel at the radiator base.
4. Close the hood.

Brake Maintenance

Adjusting the Parking Brake Interlock Switch

1. Stop the machine, move the deck lift switch fully into the neutral-locked position, set the parking brake, and remove the ignition key.
2. Remove the bolts securing the front panel and remove the panel (Figure 50).

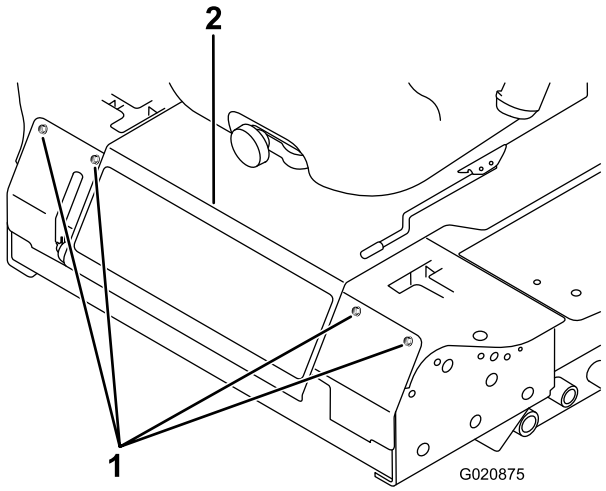

Figure 50

1. Bolts
2. Seat plate

3. Loosen the 2 jam nuts securing the parking brake interlock switch to the mounting bracket.

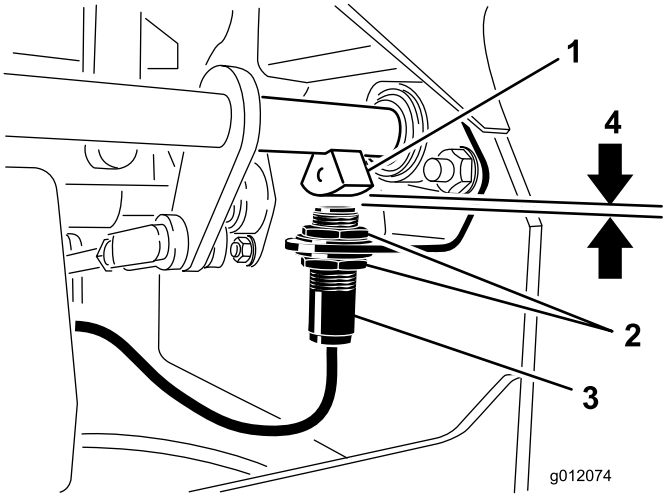

Figure 51

1. Brake-shaft sensor
2. Jam nuts
3. Parking-brake-interlock switch
4. 5/32 inch (3.9 mm)

4. Move the switch up or down on the bracket until the distance between the brake shaft sensor and the switch plunger is 3.9 mm (5/32 inch) (Figure 51).

   Note: Make sure that the brake-shaft sensor does not contact the switch plunger.

5. Secure the switch jam nuts.
6. Test the adjustment as follows:
   A. Ensure that the parking brake is engaged and you are not sitting on the seat, then start the engine.
   B. Move the control levers out of the neutral locked position.

      The engine should stop. If not, recheck the adjustment you made to the switch.
7. Install the front panel.

Belt Maintenance

Checking the Alternator Belt

Service Interval: Every 100 hours

Check the condition and tension of the belts (Figure 52) after every 100 operating hours.

1. Proper tension will allow 10 mm (3/8 inch) deflection when a force of 44 N (10 lb.) is applied on the belt midway between the pulleys.
2. If the deflection is not 10 mm (3/8 inch), loosen the alternator mounting bolts (Figure 52). Increase or decrease the alternator belt tension and tighten the bolts. Check the deflection of the belt again to ensure that the tension is correct.

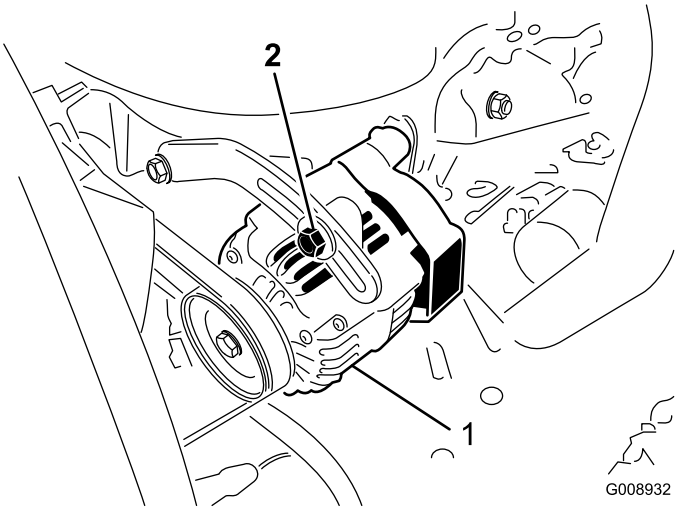

Figure 52

1. Mounting bolt
2. Alternator

Controls System Maintenance

Adjusting the Control Lever Neutral Interlock Switch

1. Stop the machine, move the deck lift switch fully into the neutral-locked position, set the parking brake, and remove the ignition key.
2. Remove the bolts securing the front panel and remove the panel (Figure 53).

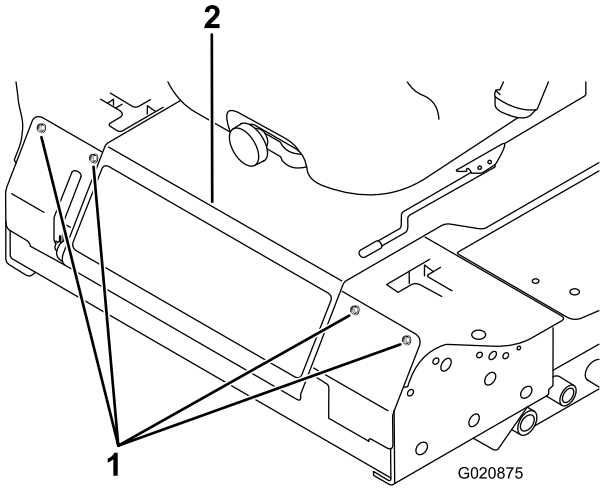

Figure 53

1. Bolts
2. Seat plate

3. Loosen the 2 screws securing the interlock switch (Figure 54).

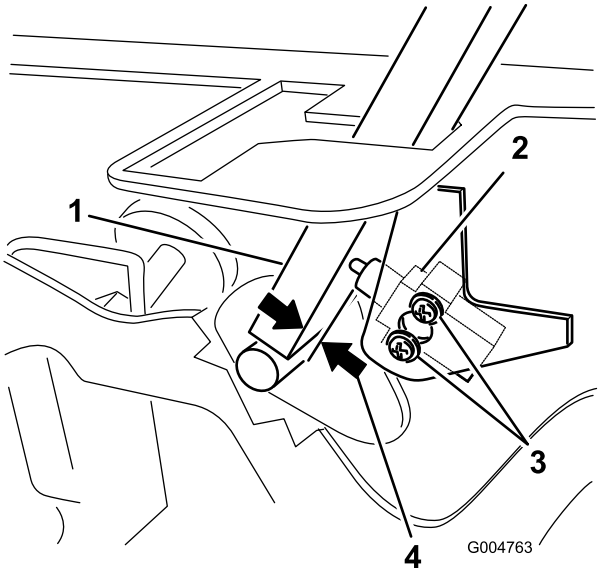

Figure 54

1. Control lever
2. Neutral interlock switch
3. Screws
4. 0.4 to 1 mm (0.015 to 0.045 inch)

4. Holding the control lever against the frame, move the switch toward the lever until the distance between lever and switch body is 0.4 to 1 mm (0.015 to 0.045 inch) (Figure 54).
5. Secure the switch.
6. Repeat steps 3 to 5 for the other lever.
7. Install the front panel.

Adjusting the Control Lever Neutral Return

If the motion control levers do not align with the neutral slots when released from the reverse drive position, adjustment is required. Adjust each lever, spring, and rod separately.

1. Disengage the PTO, move the control lever to the neutral locked position, and set the parking brake.
2. Move the throttle lever to the Slow position, stop the engine, remove the key, and wait for all moving parts to stop before leaving the operating position.
3. Remove the bolts securing the front panel and remove the panel (Figure 55).

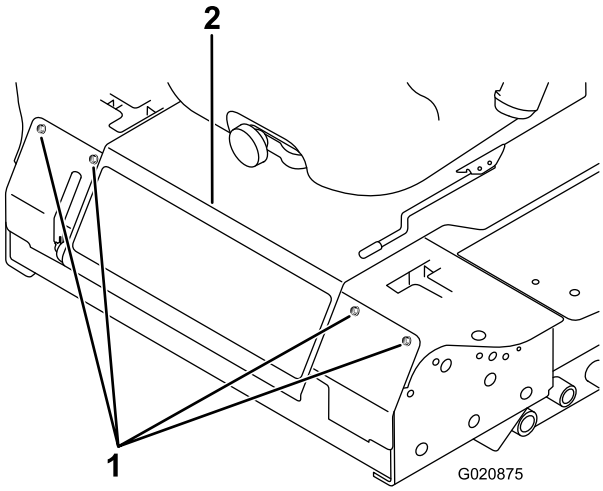

Figure 55

1. Bolts
2. Seat plate

4. Move the control lever to the neutral position but **not locked** (Figure 57).
5. Pull the lever back until the clevis pin (on an arm above the pivot shaft) contacts the end of the slot (just beginning to put pressure on the spring) (Figure 56).

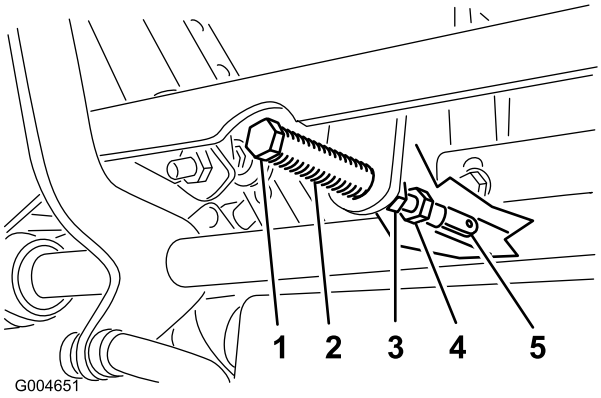

Figure 56

1. Clevis pin
2. Slot
3. Jam nuts
4. Adjustment bolt
5. Yoke

6. Check where the control lever is relative to notch in console (Figure 57).

   Note: It should be centered allowing lever to pivot outward to the neutral lock position.

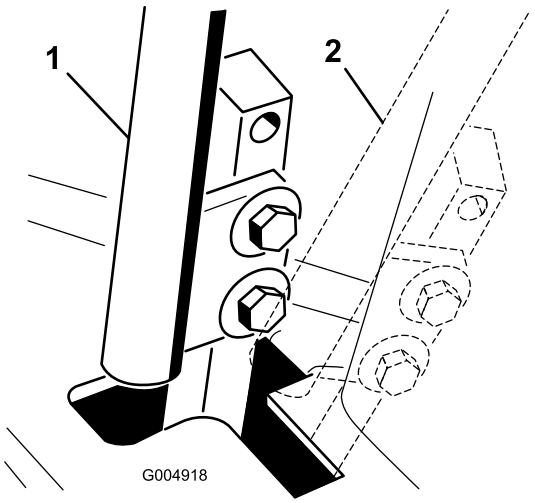

Figure 57

1. Neutral position
2. Neutral locked position

7. If adjustment is needed, loosen the nut and jam nut against the yoke (Figure 56).
8. Applying slight rearward pressure on the motion control lever, turn the head of the adjustment bolt in the appropriate direction until the control lever is centered in the neutral lock position (Figure 56).

   Note: Keeping rearward pressure on the lever will keep the pin at the end of the slot and allow the adjustment bolt to move the lever to the appropriate position.
9. Tighten the nut and jam nut (Figure 56).
10. Repeat steps 4 through 9 for the other control lever.
11. Install the front panel.

Adjusting the Traction Drive for Neutral

This adjustment must be made with drive wheels turning.

⚠ DANGER

Mechanical or hydraulic jacks may fail to support the machine and cause a serious injury.

- **Use jack stands when supporting the machine.**
- **Do not use hydraulic jacks.**

⚠ WARNING

The engine must be running to perform this adjustment. Contact with moving parts or hot surfaces may cause personal injury.

Keep hands, feet, face, clothing, and other body parts away from rotating parts, muffler, and other hot surfaces.

1. Raise the frame onto stable jack stands so that the drive wheels can rotate freely.
2. Slide seat forward, unlatch it, and swing it up and forward.
3. Disconnect the electrical connector from the seat safety switch.
4. Temporarily install a jumper wire across terminals in the wiring harness connector.
5. Start the engine, ensure that the throttle lever is midway between the Fast and Slow positions, and release the parking brake.

   Note: The motion control levers must be in the neutral locked position while making any adjustments.
6. Adjust the pump rod length on one side by rotating the hex shaft, in the appropriate direction, until the corresponding wheel is still or slightly creeping in reverse (Figure 58).

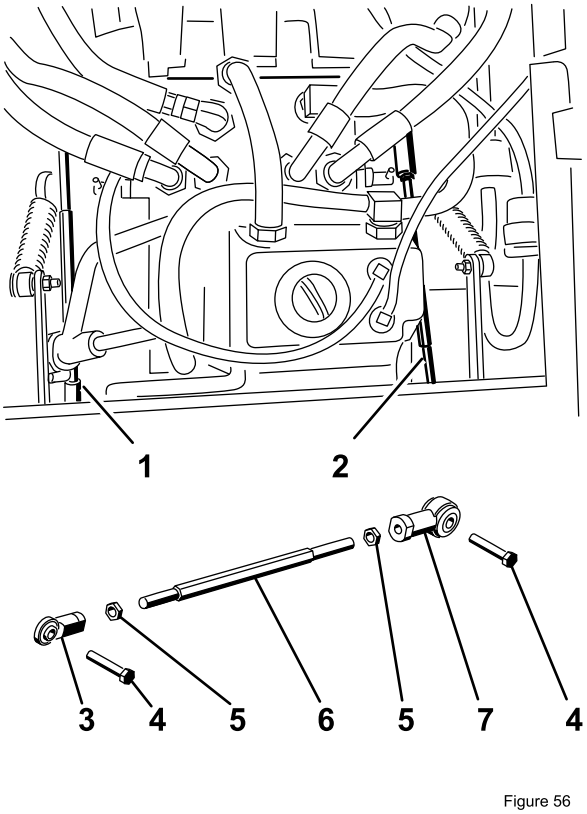

Figure 58

1. Right pump rod
2. Left pump rod
3. Ball joint
4. Bolt
5. Jam Nut
6. Hex shaft
7. Ball joint

7. Move the motion control lever forward and reverse, then back to neutral. The wheel must stop turning or slightly creep in reverse.
8. Move the throttle lever to the Fast position. Make sure that the wheel remains stopped or slightly creeps in reverse; adjust it if necessary.
9. Repeat steps 6 through 8 for the other side of the machine.
10. Tighten the jam nuts at the ball joints (Figure 56).
11. Move the throttle lever to the Slow position and stop the engine.
12. Remove the jumper wire from the wire harness connector and plug the connector into the seat switch.

⚠ WARNING

Electrical system will not perform proper safety shut off with jumper wire installed.

- **Remove jumper wire from wire harness connector and plug connector into seat switch when adjustment is completed.**
- **Never operate this unit with jumper installed and seat switch bypassed.**

13. Lower the seat into position.
14. Remove the jack stands.

Adjusting the Maximum Ground Speed

1. Disengage the PTO, move the motion control levers to the neutral locked position, and set the parking brake.
2. Move the throttle lever to the Slow position, stop the engine, remove the key, and wait for all moving parts to stop before leaving the operating position.
3. Remove the bolts securing the front panel and remove the panel (Figure 59).

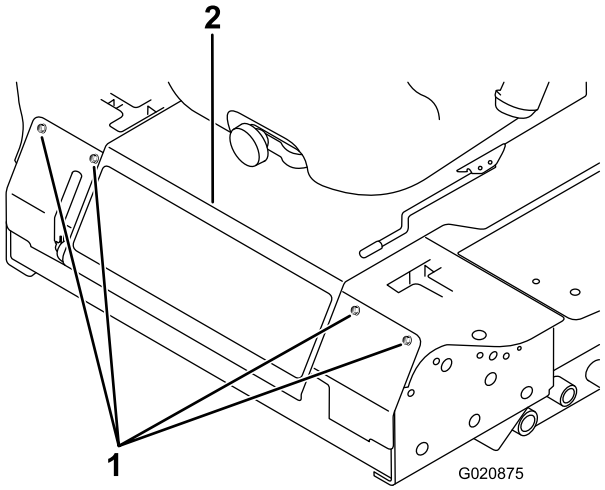

Figure 59

1. Bolts
2. Seat plate

4. Loosen the jam nut on the stop bolt for one of the control levers (Figure 60).

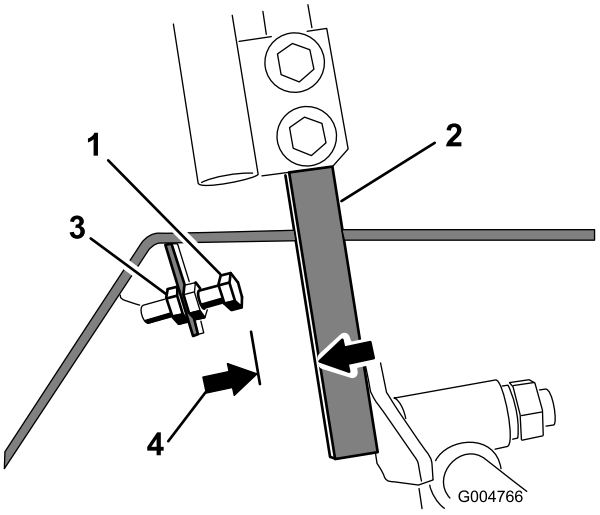

Figure 60

1. Stop bolt
2. Control lever
3. Jam nut
4. 1.5 mm (0.060 inch)

5. Thread the stop bolt all the way in (away from the control lever).
6. Push the control lever all the way forward until it stops and hold it there.
7. Thread the stop bolt out (toward the control lever) until there is a gap of 1.5 mm (0.060 inch) between the head of the stop bolt and the control lever.
8. Tighten the jam nut to secure the stop bolt in place.
9. Repeat steps 4 through 8 for the other control lever.
10. Install the front panel.

Note: If you wish to reduce the maximum machine speed, set the speed for both control levers as directed above, then back each stop bolt out an equal amount toward the control lever until you reach the maximum speed you desire (you will likely have to test your adjustment several times). Ensure that the machine drives straight and does not turn when both control levers are pushed all the way forward. If the machine turns, you do not have the stop bolts evenly set and will need to adjust them further.

Adjusting the Tracking

1. Disengage the PTO, move the motion control levers to the neutral locked position and set the parking brake.
2. Move the throttle lever to the Slow position, stop the engine, remove the key, and wait for all moving parts to stop before leaving the operating position.
3. Loosen the bolts securing the control levers (Figure 61)

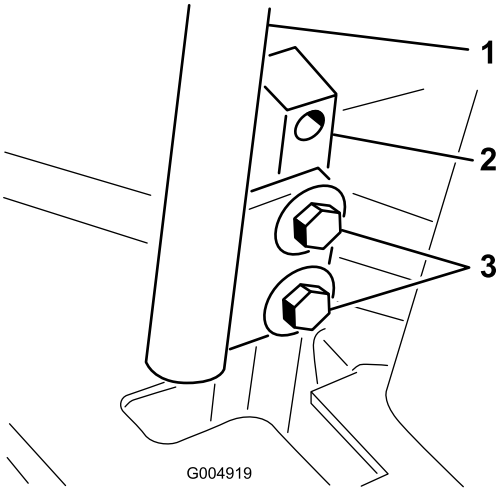

Figure 61

1. Control lever
2. Control-lever post
3. Bolts

4. Have someone push the control-lever posts (not the control levers) all the way forward into the maximum speed position and hold them there.
5. Adjust the control levers so that they line up (Figure 62) and tighten the bolts, securing the levers to the posts.

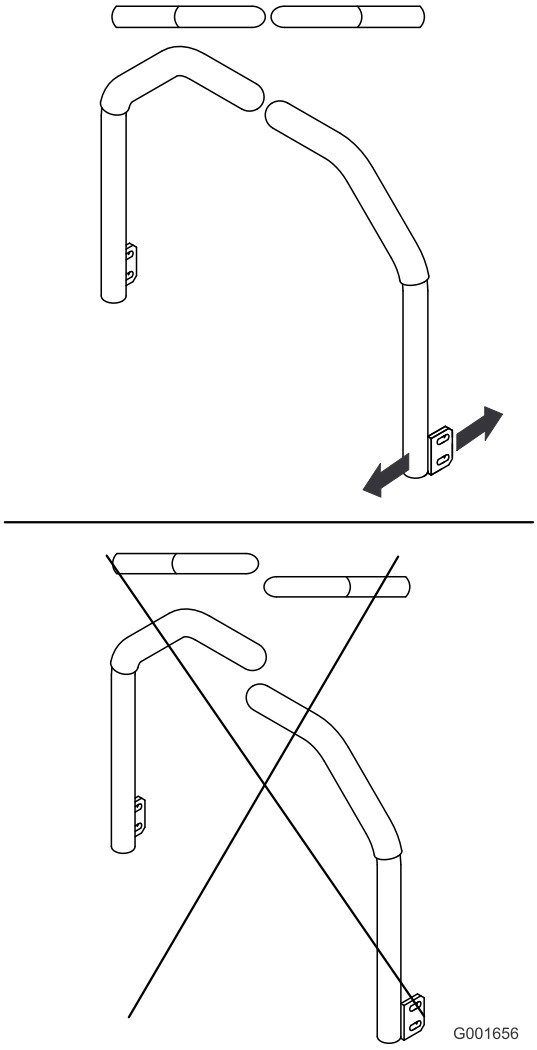

Figure 62

Hydraulic System Maintenance

The reservoir is filled at the factory with approximately 4.7 liters (5 quarts) of high quality tractor transmission/hydraulic fluid. The recommended replacement fluid is as follows:

Toro Premium Transmission/Hydraulic Tractor Fluid
(Available in 5 gallon pails or 55 gallon drums. See parts catalog or Toro distributor for part numbers.)

Alternate fluids: If the Toro fluid is not available, Mobil® 424 hydraulic fluid may be used.

Note: Toro will not assume responsibility for damage caused by improper substitutions.

Note: Many hydraulic fluids are almost colorless, making it difficult to spot leaks. A red dye additive for the hydraulic system oil is available in 20 ml (2/3 oz) bottles. One bottle is sufficient for 15-22 liters (4-6 gallons) of hydraulic oil. Order part number 44-2500 from your Authorized Toro Distributor.

Checking the Hydraulic System

Service Interval: Before each use or daily

Check the level of the hydraulic fluid before the engine is first started and daily thereafter.

1. Position the machine on a level surface.
2. Place the controls in the neutral locked position and start the engine.

   Note: Run engine at lowest possible RPM to purge the system of air. **Do not engage the PTO**.
3. Raise the deck to extend lift cylinders, stop the engine, and remove the key.
4. Raise the seat to access the hydraulic fluid tank.
5. Remove the hydraulic fill cap (Figure 63) from the filler neck.

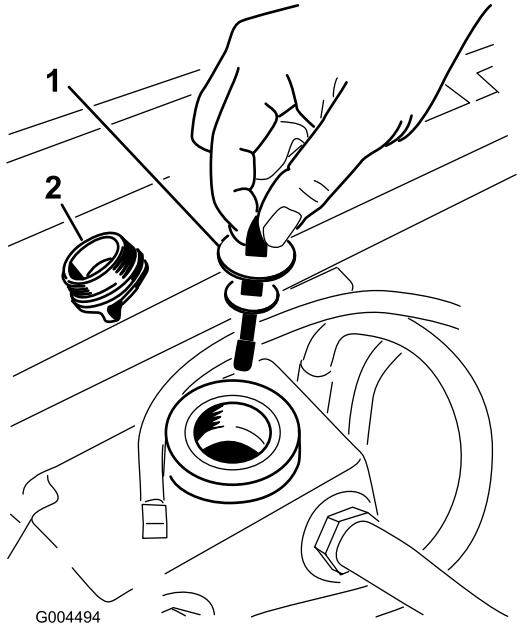

Figure 63

1. Dipstick
2. Fill cap

6. Remove the dipstick and wipe it with a clean rag (Figure 63).
7. Place the dipstick into the filler neck; then remove it and check level of fluid (Figure 63).

   Note: If level is not within notched area of the dipstick, add enough high quality hydraulic fluid to raise level to within the notched area. **Do not overfill**.
8. Replace the dipstick and thread the fill cap finger-tight onto filler neck.
9. Check all hoses and fittings for leaks.

Changing the Hydraulic Oil And Filter

Service Interval: After the first 200 hours

Every 800 hours

1. Disengage the PTO, move the motion control levers to the neutral locked position, and set the parking brake.
2. Move the throttle lever to the Slow position, stop the engine, remove the key, and wait for all moving parts to stop before leaving the operating position.
3. Place a large pan under the hydraulic reservoir and transmission case and remove the plugs, draining all of the hydraulic fluid (Figure 64).

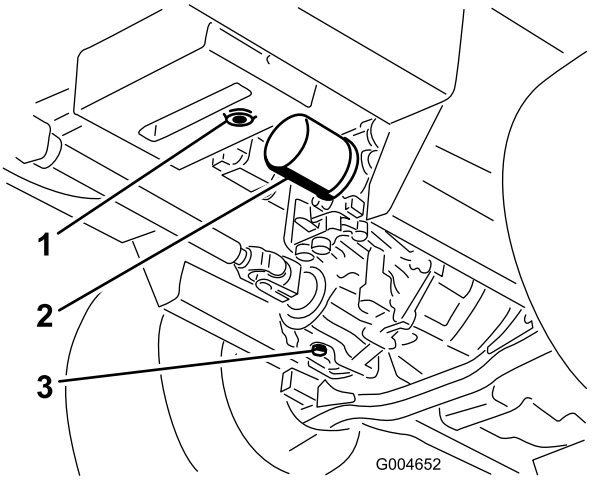

Figure 64

1. Hydraulic reservoir drain plug
2. Filter
3. Transmission case drain plug

4. Clean the area around the hydraulic oil filter and remove it (Figure 64).
5. Immediately install a new hydraulic oil filter.
6. Install the hydraulic reservoir and transmission case drain plugs.
7. Fill the reservoir to the proper level; refer to Hydraulic System Maintenance (page 51).
8. Start the engine and check for oil leaks. Allow the engine to run for about five minutes, then shut it off.
9. After 2 minutes, check the level of the hydraulic fluid; refer to Hydraulic System Maintenance (page 51).

Mower Deck Maintenance

Adjusting the Mower Deck Pitch

Cutting unit pitch is the difference in height-of-cut from the front of the blade plane to the back of the blade plane. Use a blade pitch of approximately 8 mm (5/16 inch). That is the back of the blade plane is 8 mm (5/16 inch) higher than the front.

1. Position the machine on a level surface on the shop floor.
2. Set the cutting unit to the desired height-of-cut, move the throttle lever to the Slow position, stop the engine, set the parking brake, and remove the ignition key.
3. Rotate the center blade so that it points straight forward.
4. Using a short ruler, measure from the floor to the front tip of the blade.
5. Rotate the same blade tip to the rear and measure from the floor to the tip of the blade at the rear of the deck.
6. Subtract the front dimension from the rear dimension to calculate the blade pitch.
7. Adjust the jam nuts securing the rear deck yokes/chains to raise the rear of the deck so that the blade pitch is set to 8 mm (5/16 inch) (Figure 65).

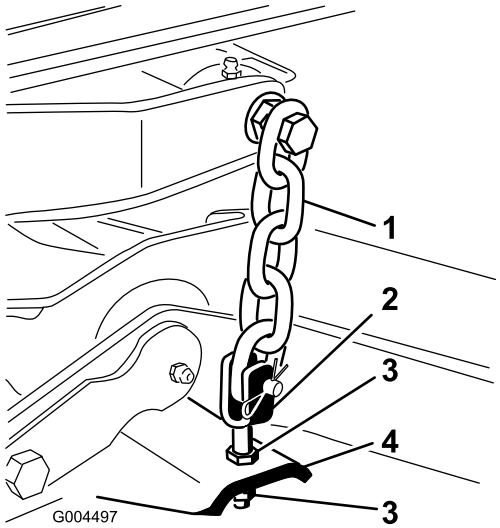

Figure 65

1. Chain
2. Yoke
3. Jam nut
4. Mower deck

Cleaning

Cleaning Under the Mower

Service Interval: Before each use or daily

Remove the grass buildup under the mower daily.

1. Disengage the PTO, move the motion control levers to the neutral locked position, and set the parking brake.
2. Move the throttle lever to the Slow position, stop the engine, remove the key, and wait for all moving parts to stop before leaving the operating position.
3. Raise the mower to the transport position.
4. Raise the front of the machine by using jack stands.
5. Thoroughly clean the underside of the mower with water.

Waste Disposal

Engine oil, batteries, hydraulic oil, and engine coolant are pollutants. Dispose of these according to your state and local regulations.

Storage

Machine

1. Thoroughly clean the machine, deck and the engine, paying special attention to these areas:
   - Radiator and radiator screen
   - Underneath the deck
   - Under the deck belt covers
   - Counterbalance springs
   - PTO shaft assembly
   - All grease fittings and pivot points
   - Remove the control panel and clean out inside of the control box
   - Beneath the seat plate and top of the transmission
2. Check and adjust front and rear tractor tire pressure; refer to Checking the Tire Pressure (page 43).
3. Remove, sharpen, and balance the mower blades. Install the blades and torque the blade fasteners to 115-149 N-m (85-110 ft-lb).
4. Check all fasteners for looseness and tighten them as necessary. Especially torque the 6 bolts securing the mower deck frame to the traction unit (Figure 66) to 359 N-m (265 ft-lb).

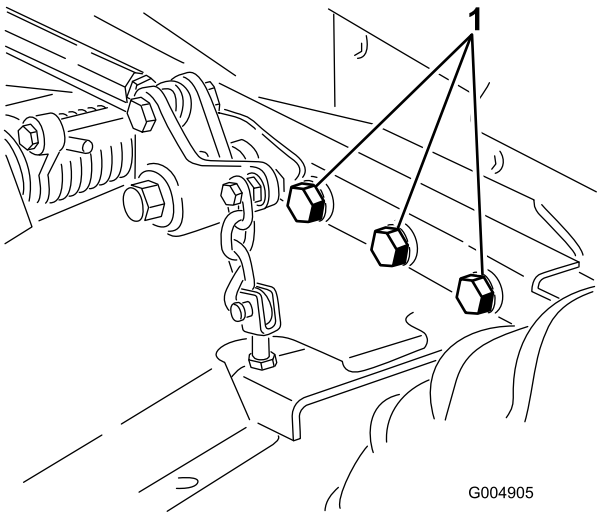

Figure 66

Right side not shown.

1. Bolts

5. Grease or oil all grease fittings, pivot points, and transmission by-pass valve pins. Wipe off any excess lubricant.
6. Lightly sand and use touch up paint on painted areas that are scratched, chipped or rusted. Repair any dents in the metal body.
7. Service the battery and cables as follows:
   A. Remove the battery terminals from the battery posts.
   B. Clean the battery, terminals, and posts with a wire brush and baking soda solution.
   C. Coat the cable terminals and battery posts with Grafo 112X skin-over grease (Toro Part No. 505-47) or petroleum jelly to prevent corrosion.
   D. Slowly recharge the battery for 24 hours every 60 days to prevent lead sulfation of the battery.

Engine

1. Drain the engine oil from the oil pan and replace the drain plug.
2. Replace the oil filter.
3. Fill the engine with the recommended motor oil.
4. Start the engine and run it at idle speed for 2 minutes.
5. Drain the fuel from the fuel tank, fuel lines, pump, filter, and separator. Flush the fuel tank with clean diesel fuel and connect all fuel lines.
6. Thoroughly clean and service the air cleaner assembly.
7. Seal the air cleaner inlet and the exhaust outlet with weather proof masking tape.
8. Check the oil filler cap and fuel tank cap to ensure that they are securely in place.

Notes:

The Toro Total Coverage Guarantee

A Limited Warranty

Conditions and Products Covered

The Toro Company and its affiliate, Toro Warranty Company, pursuant to an agreement between them, jointly warrant your Toro Commercial product ("Product") to be free from defects in materials or workmanship for two years or 1500 operational hours*, whichever occurs first. This warranty is applicable to all products with the exception of Aerators (refer to separate warranty statements for these products). Where a warrantable condition exists, we will repair the Product at no cost to you including diagnostics, labor, parts, and transportation. This warranty begins on the date the Product is delivered to the original retail purchaser.
* Product equipped with an hour meter.

Instructions for Obtaining Warranty Service

You are responsible for notifying the Commercial Products Distributor or Authorized Commercial Products Dealer from whom you purchased the Product as soon as you believe a warrantable condition exists. If you need help locating a Commercial Products Distributor or Authorized Dealer, or if you have questions regarding your warranty rights or responsibilities, you may contact us at:

Toro Commercial Products Service Department
Toro Warranty Company
8111 Lyndale Avenue South
Bloomington, MN 55420-1196

952–888–8801 or 800–952–2740
E-mail: commercial.warranty@toro.com

Owner Responsibilities

As the Product owner, you are responsible for required maintenance and adjustments stated in your *Operator's Manual*. Failure to perform required maintenance and adjustments can be grounds for disallowing a warranty claim.

Items and Conditions Not Covered

Not all product failures or malfunctions that occur during the warranty period are defects in materials or workmanship. This warranty does not cover the following:

- Product failures which result from the use of non-Toro replacement parts, or from installation and use of add-on, or modified non-Toro branded accessories and products. A separate warranty may be provided by the manufacturer of these items.
- Product failures which result from failure to perform recommended maintenance and/or adjustments. Failure to properly maintain your Toro product per the Recommended Maintenance listed in the *Operator's Manual* can result in claims for warranty being denied.
- Product failures which result from operating the Product in an abusive, negligent, or reckless manner.
- Parts subject to consumption through use unless found to be defective. Examples of parts which are consumed, or used up, during normal Product operation include, but are not limited to, brake pads and linings, clutch linings, blades, reels, rollers and bearings (sealed or greasable), bed knives, spark plugs, castor wheels and bearings, tires, filters, belts, and certain sprayer components such as diaphragms, nozzles, and check valves, etc.
- Failures caused by outside influence. Conditions considered to be outside influence include, but are not limited to, weather, storage practices, contamination, use of unapproved fuels, coolants, lubricants, additives, fertilizers, water, or chemicals, etc.
- Failure or performance issues due to the use of fuels (e.g. gasoline, diesel, or biodiesel) that do not conform to their respective industry standards.
- Normal noise, vibration, wear and tear, and deterioration.
- Normal "wear and tear" includes, but is not limited to, damage to seats due to wear or abrasion, worn painted surfaces, scratched decals or windows, etc.

Parts

Parts scheduled for replacement as required maintenance are warranted for the period of time up to the scheduled replacement time for that part. Parts replaced under this warranty are covered for the duration of the original product warranty and become the property of Toro. Toro will make the final decision whether to repair any existing part or assembly or replace it. Toro may use remanufactured parts for warranty repairs.

Deep Cycle and Lithium-Ion Battery Warranty:

Deep cycle and Lithium-Ion batteries have a specified total number of kilowatt-hours they can deliver during their lifetime. Operating, recharging, and maintenance techniques can extend or reduce total battery life. As the batteries in this product are consumed, the amount of useful work between charging intervals will slowly decrease until the battery is completely worn out. Replacement of worn out batteries, due to normal consumption, is the responsibility of the product owner. Battery replacement may be required during the normal product warranty period at owner's expense. Note: (Lithium-Ion battery only): A Lithium-Ion battery has a part only prorated warranty beginning year 3 through year 5 based on the time in service and kilowatt hours used. Refer to the *Operator's Manual* for additional information.

Maintenance is at Owner's Expense

Engine tune-up, lubrication, cleaning and polishing, replacement of filters, coolant, and completing recommended maintenance are some of the normal services Toro products require that are at the owner's expense.

General Conditions

Repair by an Authorized Toro Distributor or Dealer is your sole remedy under this warranty.

Neither The Toro Company nor Toro Warranty Company is liable for indirect, incidental or consequential damages in connection with the use of the Toro Products covered by this warranty, including any cost or expense of providing substitute equipment or service during reasonable periods of malfunction or non-use pending completion of repairs under this warranty. Except for the Emissions warranty referenced below, if applicable, there is no other express warranty. All implied warranties of merchantability and fitness for use are limited to the duration of this express warranty.

Some states do not allow exclusions of incidental or consequential damages, or limitations on how long an implied warranty lasts, so the above exclusions and limitations may not apply to you. This warranty gives you specific legal rights, and you may also have other rights which vary from state to state.

Note regarding engine warranty:

The Emissions Control System on your Product may be covered by a separate warranty meeting requirements established by the U.S. Environmental Protection Agency (EPA) and/or the California Air Resources Board (CARB). The hour limitations set forth above do not apply to the Emissions Control System Warranty. Refer to the Engine Emission Control Warranty Statement supplied with your product or contained in the engine manufacturer's documentation for details

Countries Other than the United States or Canada

Customers who have purchased Toro products exported from the United States or Canada should contact their Toro Distributor (Dealer) to obtain guarantee policies for your country, province, or state. If for any reason you are dissatisfied with your Distributor's service or have difficulty obtaining guarantee information, contact the Toro importer.

374-0253 Rev B