Form No. 3390-502 Rev A

TORO®

Count on it.

Parts Catalog

TRX-16 Trencher

Model No. 22972—Serial No. 315000001 and Up

Model No. 22972G—Serial No. 315000001 and Up

Register at www.Toro.com.
Original Instructions (EN)

CE

3390-502 A

Ordering Replacement Parts

To order replacement parts, please supply the part number, the quantity, and the description of each part desired.

Understanding Reference Numbers

Each identified part in an illustration has a reference number. The reference number for a part also appears in the parts list, along with other information about the part.

This catalog uses two special reference number formats, one to indicate parts in a service assembly and another to indicate the quantity of a given part in an illustration.

Service Assembly Reference Numbers

Parts in service assemblies have reference numbers in the form a:b. The a represents the reference number of the entire service assembly and the b represents a sequential number unique to each part within the service assembly.

For example, a wheel assembly might be identified by reference number 6, the tire by 6:1, the valve by 6:2, and the wheel by 6:3. When you order the assembly identified by reference number 6, you receive all parts identified by reference numbers 6:1,6:2, and 6:3. However, you may also order any part individually. Reference numbers of this type appear in illustration and in parts lists.

Reference Numbers Indicating Quantity

In an illustration, if a reference number indicates more than one part, the reference number has the form nX y. The n represents the quantity of the part, the X is the multiplication symbol, and the y represents the reference number.

For example, in an illustration, the reference number 2X 37 means that two of the parts identified by reference number 37 are indicated.

List of Abbreviations

AR: as required

ASM: assembly

BBC: blade brake control

BHTF: button head thread forming

CARR: carriage

CCW: counter clockwise

CW: clockwise

DEG: degrees

DPA: Dual Point Adjustment

ECM: electronic control module

EXT: external

FH: flat head

GA: gauge

HD: heavy-duty

HF: hex flange

HH: hex head

HHF: hex head flange

HHFTF: hex head flange thread forming

HJ: hex jam

HLH: hex lag head

HOC: height-of-cut

HP: high pressure

HSBH: hex socket button head

HSFH: hex socket flat head

HSH: hex socket head

HWH: hex washer head

HWHTF: hex washer head thread forming

HYD: hydraulic

LH: left hand

LP: low pressure

LPG: Liquefied Petroleum Gas

NI: nylon insert

NPTF: national pipe thread fine

PFH: phillips flat head

PPH: phillips pan head

PPHTF: phillips pan head thread forming

PRH: phillips round head

PTH: phillips truss head

PTO: power-take-off

RH: right hand

ROPS: roll-over protection system

RRB: rear roller brush

SFH: slotted fillister head

SHH: slotted hex head

SHWH: slotted hex washer head

SPH: slotted pan head

SQH: square head

SRH: slotted round head

STD: standard

TAP: self tapping

TTH: torx truss head

Contents

Main Frame Assembly 4
Track and Drive Assembly 6
Hydraulic Pump Assembly No. 117-6410 8
Hydraulic Pump Assembly No. 117-6409 9
Hydraulic Motor Assembly No. 104-8470 10
Parking Brake Assembly 11
Engine Assembly 12
Gear Pump Assembly No. 114-3072 14
Control Assembly 15
Trencher Assembly 17
Control Tower Assembly 18
Hydraulic Control Assembly 20
2-Spool Valve Assembly No. 115-4062 21
Oil Cooler Assembly 22
Hydraulic Routing Assembly 23
Electrical Assembly 24
Cylinder and Crankcase Assembly 25
Piston and Crankshaft Assembly 26
Valve and Camshaft Assembly 27
Lubrication Equipment Assembly 28
Cooling Equipment Assembly 29
Electric Equipment Assembly 30
Control Equipment Assembly 31
Carburetor Assembly 32
Air Filter and Muffler Assembly 33
Fuel Pump and Filter Assembly 34
Starter Assembly 35
Label Set 36
Attachments and Accessories 37

© 2015—The Toro® Company
8111 Lyndale Avenue South
Bloomington, MN 55420

Contact us at www.Toro.com.
Printed in the USA.
All Rights Reserved

Main Frame Assembly

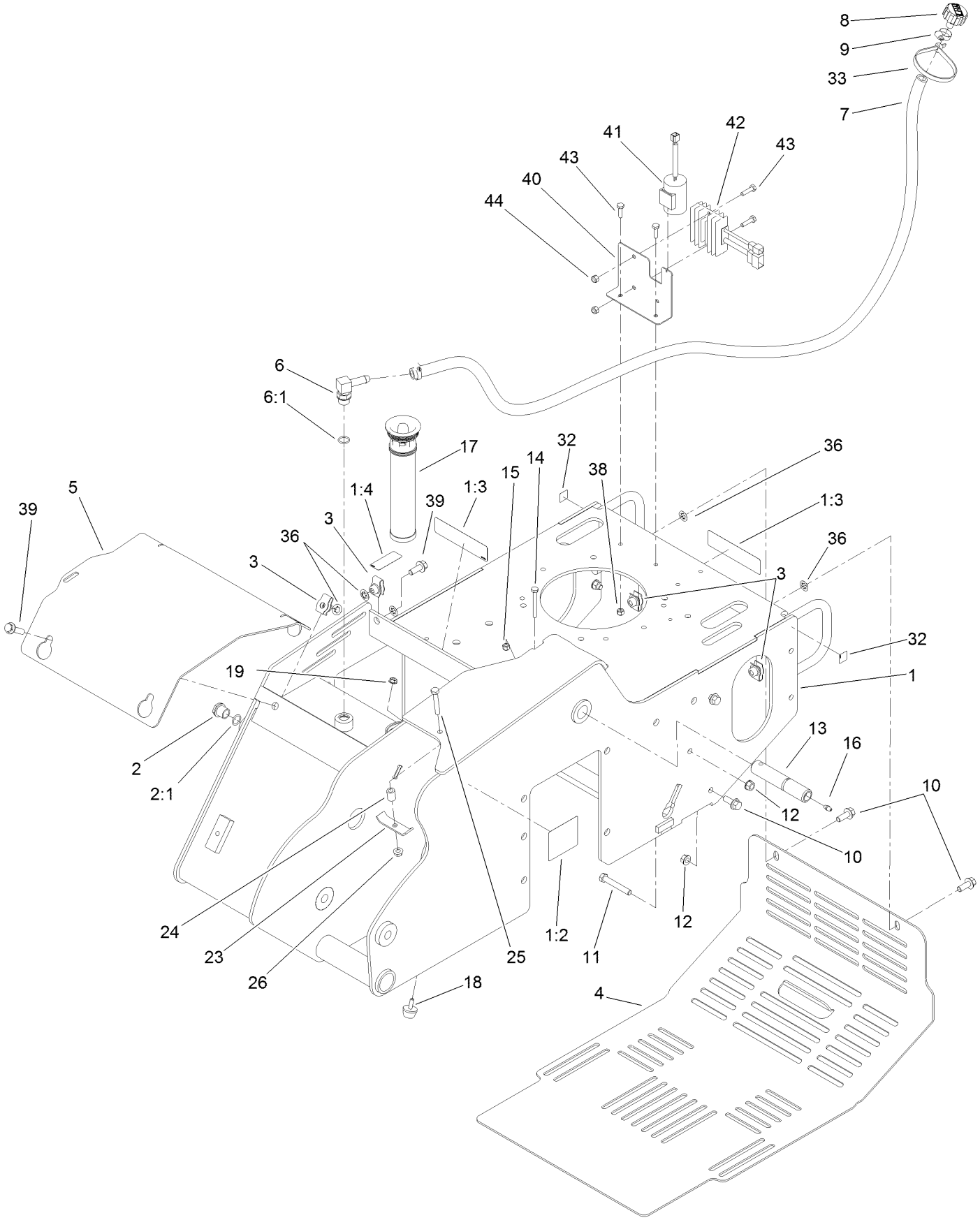

Main Frame Assembly (continued)

Ref.	Part Number	Qty.	Description
1	127-9602	1	Main Frame ASM
1:2	100-4650	1	Decal-Warning
1:3	93-7814	2	Decal-Danger
1:4	93-6686	1	Decal-Oil, HYD
2	114-3075	1	Sight Glass ASM
2:1	237-79	1	O-Ring
3	105-4886	5	Nut-Tinnerman
4	115-6503-01	1	Cover-Rear
5	119-4566-03	1	Plate-Cover, Front
6	354-120	1	Fitting-HYD, 90 DEG
6:1	237-79	1	O-Ring
7	114-3042	1	Hose-Breather
8	68-6150	1	Breather
9	2412-36	2	Clamp-Hose
10	3234-11	2	Screw-HHF
11	323-12	1	Screw-HH
12	32128-40	2	Nut-Flange
13	120-7352	1	Pin-Pivot
14	321-18	1	Screw-HH

Ref.	Part Number	Qty.	Description
15	3296-42	1	Nut-Lock, NI
16	302-5	1	Fitting-Grease
17	114-3039	1	In-Tank Filter ASM
18	1-523420	1	Bumper
19	32128-33	1	Nut-HF
23	100-4860	1	Bracket-Clamp
24	93-5023	1	Spacer
25	322-10	1	Screw-HH
26	32128-20	1	Nut-HF
32	93-9084	2	Decal-Point, Lift
33	3334-945	1	Tie-Cable
36	107-3154	5	Nut-Push
38	3296-42	2	Nut-Lock, NI
39	3234-18	3	Screw-HHF
40	117-6399-01	1	Bracket-Electrical
41	117-6397	1	Condenser (F/W Engine)
42	117-6398	1	Regulator (F/W Engine)
43	321-6	4	Screw-HH
44	3296-42	2	Nut-Lock, NI

Track and Drive Assembly

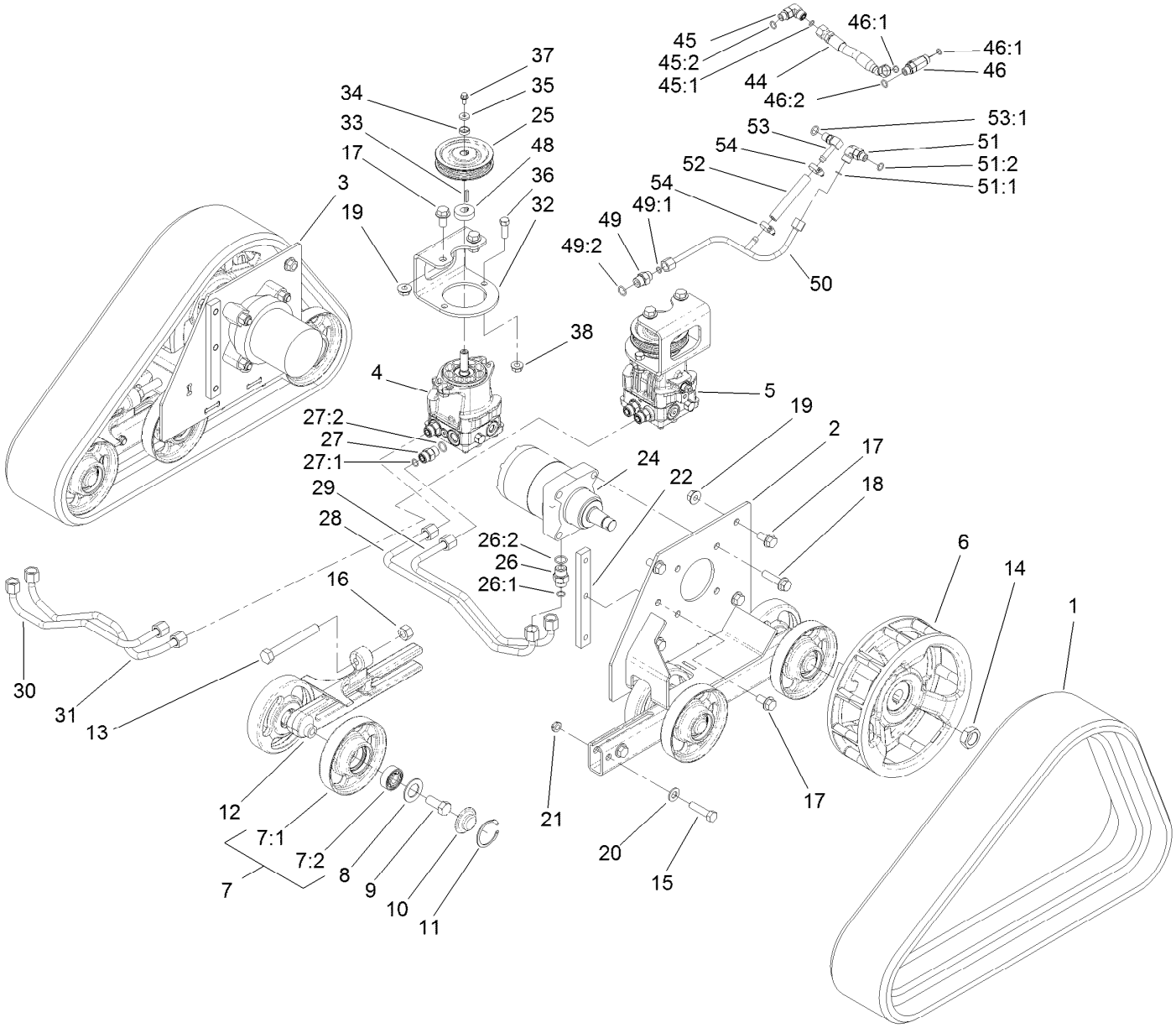

Track and Drive Assembly (continued)

Ref.	Part Number	Qty.	Description
1	112-4816	2	Track-Rubber
2	114-2992-03	1	Frame-Track, LH
3	114-2993-03	1	Frame-Track, RH
4	117-6409	1	RH HYD Pump ASM
5	117-6410	1	LH HYD Pump ASM
6	117-6426-03	2	Wheel-Drive
7	112-4817	12	Wheel-Tensioner
7:1	114-3014-03	1	Wheel-Track
7:2	120-5378	1	Bearing-Ball
8	106-7585	12	Gasket-Bogie
9	327-4	12	Screw-HH
10	106-7557	12	Cap-Wheel, Bearing
11	106-7595	12	Ring-Snap, Internal
12	114-3077-03	2	Tensioner-Track
13	112-4874	2	Screw-HH, TAP
14	106-8159	2	Nut-Lock
15	325-8	4	Screw-HH
16	3217-11	2	Nut-Hex
17	3234-6	10	Screw-HHF
18	3234-27	8	Screw-HHF
19	32128-49	8	Nut-HHF
20	3256-26	4	Washer-Flat
21	3296-45	4	Nut-Lock, NI
22	114-3091	2	Bar-Thread
24	104-8470	2	HYD Wheel Motor ASM
25	115-1298	2	Sheave
26	340-6	4	Fitting-HYD, Straight
26:1	237-30	1	O-Ring
26:2	237-80	1	O-Ring
27	340-4	4	Fitting-HYD, Straight
27:1	237-30	1	O-Ring
27:2	237-79	1	O-Ring
28	115-1285	1	Tube-HYD
29	115-1286	1	Tube-HYD
30	115-1287	1	Tube-HYD
31	115-1288	1	Tube-HYD
32	115-1289-03	2	Bracket-Mount, Pump
33	80-6090	2	Key-Pump
34	108-4211	2	Bushing
35	73-3580	2	Washer
36	324-5	4	Screw-HH
37	33103-016	2	Screw-HHF
38	32128-42	4	Nut-HF
44	115-1297	1	Hose-HYD
45	340-77	1	Fitting-HYD, 90 DEG
45:1	237-22	1	O-Ring
45:2	237-42	1	O-Ring
46	340-86	1	Fitting-Tee
46:1	237-22	2	O-Ring
46:2	237-42	1	O-Ring
48	115-4002	2	Spacer
49	340-3	1	Adapter
49:1	237-22	1	O-Ring
49:2	237-79	1	O-Ring
50	117-1305	1	Tube-HYD
51	340-77	1	Fitting-HYD, 90 DEG
51:1	237-22	1	O-Ring
51:2	237-42	1	O-Ring
52	115-4083	1	Hose
53	100-4887	1	Fitting-Barbed, 90 DEG
53:1	237-42	1	O-Ring
54	2412-36	2	Clamp-Hose

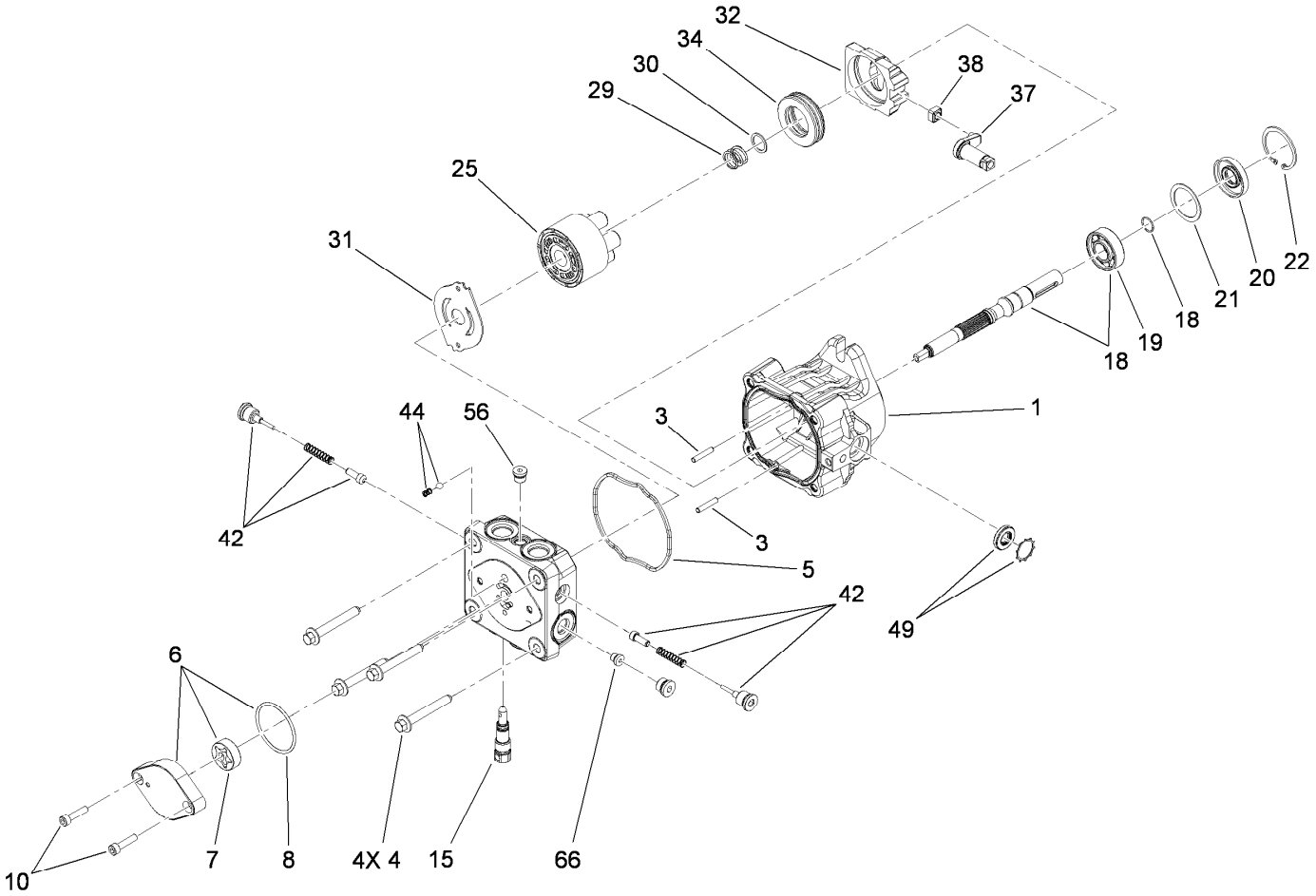

Hydraulic Pump Assembly No. 117-6410

Ref.	Part Number	Qty.	Description
1	115-4464	1	Housing Kit
3	106-8753	2	Pin-Headless, Straight
4	106-8754	4	Bolt-HF
5	106-8755	1	O-Ring
6	106-8756	1	Charge Pump Kit
7	104-2122	1	Gerotor ASM
8	106-8757	1	O-Ring
10	104-2111	2	Capscrew
15	106-8759	1	Bypass Valve Kit
18	103-2664	1	Input Shaft Kit
19	104-5311	1	Bearing-Ball
20	104-5310	1	Seal-Lip
21	104-5308	1	Spacer
22	104-5309	1	Ring-Retaining
25	103-2666	1	Cylinder Block Kit

Ref.	Part Number	Qty.	Description
29	94-1936	1	Spring-Block
30	94-1937	1	Washer-Thrust
31	105-6185	1	Plate-Valve
32	94-1907	1	Swashplate-Variable
34	94-6922	1	Bearing-Thrust
37	115-4458	1	Arm-Trunnion, Tapered Square
38	94-1910	1	Guide-Slot
42	98-3252	2	Valve-Check (W/Poppet)
44	106-8760	1	Charge Relief Valve Kit
49	114-8155	1	Trunnion Seal Kit
56	106-8762	1	Plug-HSH
66	106-8763	1	Plug-HSH
99	105-6184	1	Seal Overhaul Kit ●

● Not illustrated

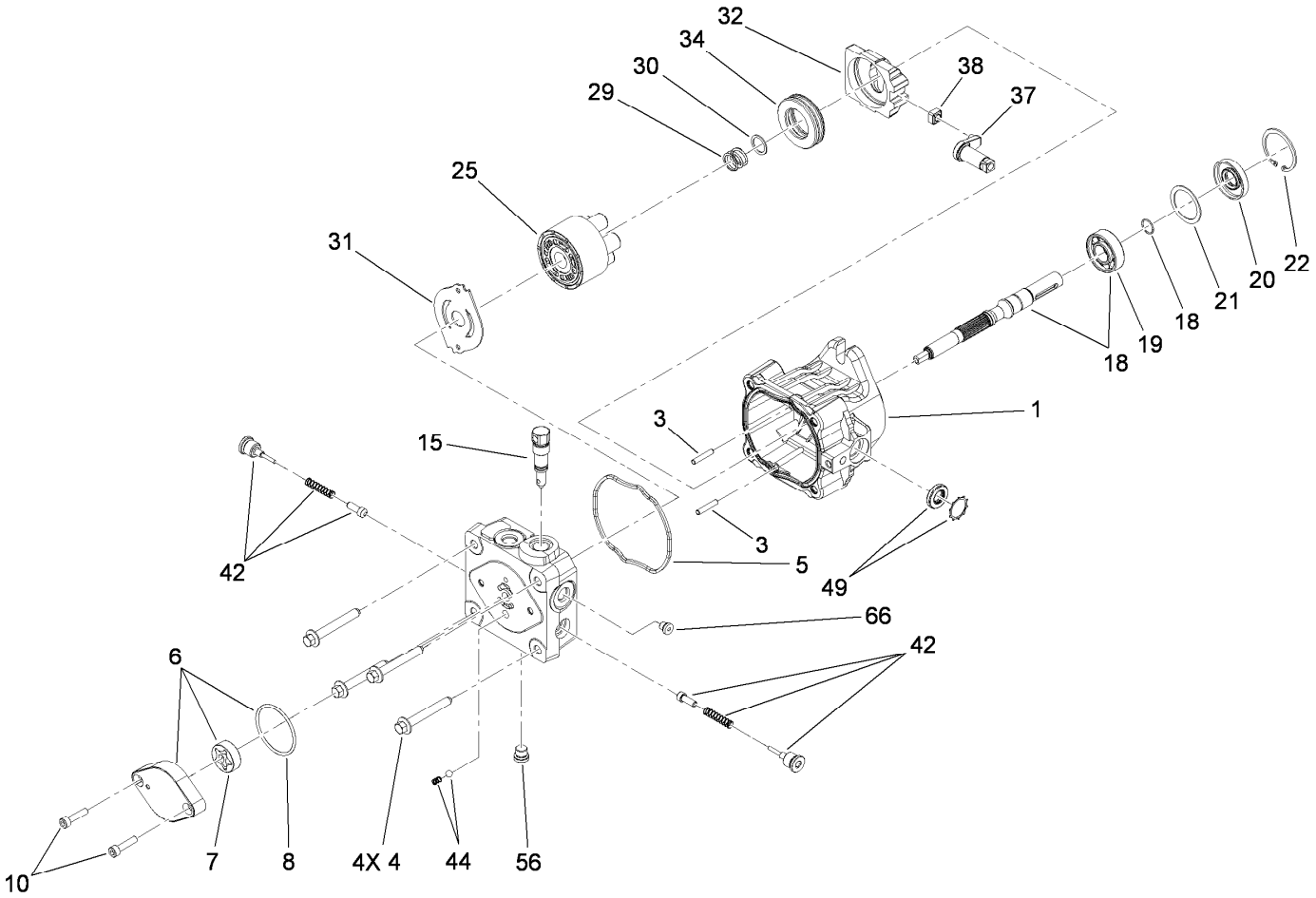

Hydraulic Pump Assembly No. 117-6409

Ref.	Part Number	Qty.	Description
1	115-4464	1	Housing Kit
3	106-8753	2	Pin-Headless, Straight
4	106-8754	4	Bolt-HF
5	106-8755	1	O-Ring
6	106-8756	1	Charge Pump Kit
7	104-2122	1	Gerotor ASM
8	106-8757	1	O-Ring
10	104-2111	2	Capscrew
15	106-8759	1	Bypass Valve Kit
18	103-2664	1	Input Shaft Kit
19	104-5311	1	Bearing-Ball
20	104-5310	1	Seal-Lip
21	104-5308	1	Spacer
22	104-5309	1	Ring-Retaining
25	103-2666	1	Cylinder Block Kit

Ref.	Part Number	Qty.	Description
29	94-1936	1	Spring-Block
30	94-1937	1	Washer-Thrust
31	105-6185	1	Plate-Valve
32	94-1907	1	Swashplate-Variable
34	94-6922	1	Bearing-Thrust
37	115-4458	1	Arm-Trunnion, Tapered Square
38	94-1910	1	Guide-Slot
42	98-3252	2	Valve-Check (W/Poppet)
44	106-8760	1	Charge Relief Valve Kit
49	114-8155	1	Trunnion Seal Kit
56	106-8762	1	Plug-HSH
66	106-8763	1	Plug-HSH
99	105-6184	1	Seal Overhaul Kit ●

● Not illustrated

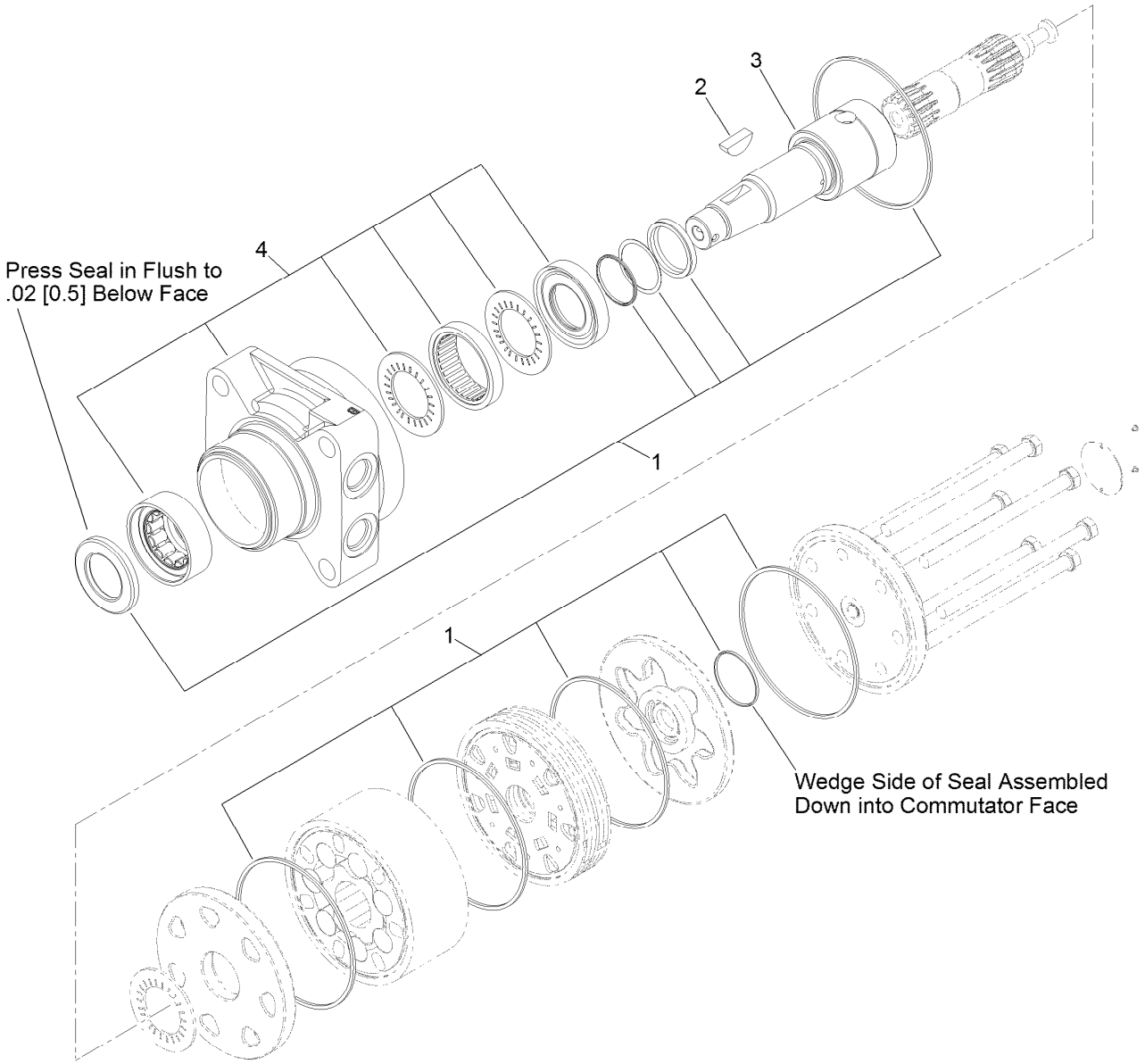

Hydraulic Motor Assembly No. 104-8470

Ref.	*Part Number*	*Qty.*	*Description*
1	115-4061	1	Seal Kit
2	3257-42	1	Key-Woodruff
3	99-3090	1	Shaft-Coupling
4	120-5395	1	Motor Housing ASM

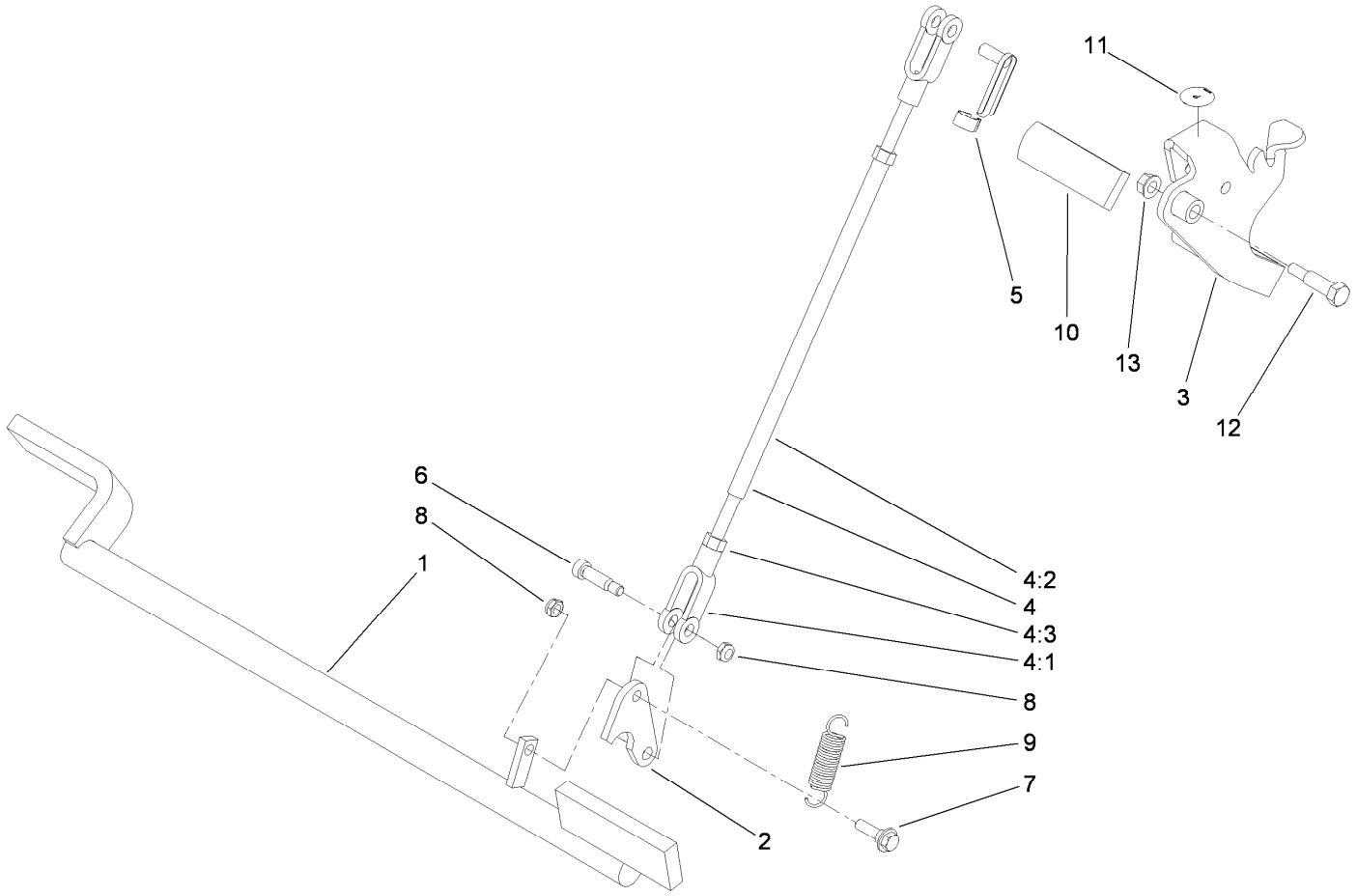

Parking Brake Assembly

Ref.	Part Number	Qty.	Description
1	114-2972-03	1	Bar-Brake
2	114-2975	1	Link-Mounting
3	117-6421-03	1	Handle-Brake
4	103-4335	1	Brake Rod ASM
4:1	1-633131	2	Yoke-Linkage, Brake
4:2	103-3907	1	Linkage-Handle, Brake
4:3	3219-3	2	Nut-Hex
5	103-2399	1	Pin-Spring, Clevis

Ref.	Part Number	Qty.	Description
6	114-8629	1	Bolt-Shoulder
7	27-7211	1	Screw-Shoulder
8	3296-47	2	Nut-Lock, NI
9	67-1450	1	Spring-Idler
10	62-9130	1	Grip-Handle
11	107-8495	1	Decal-Parking Brake
12	7-0030	1	Screw-Shoulder, HH
13	32128-20	1	Nut-HF

Engine Assembly

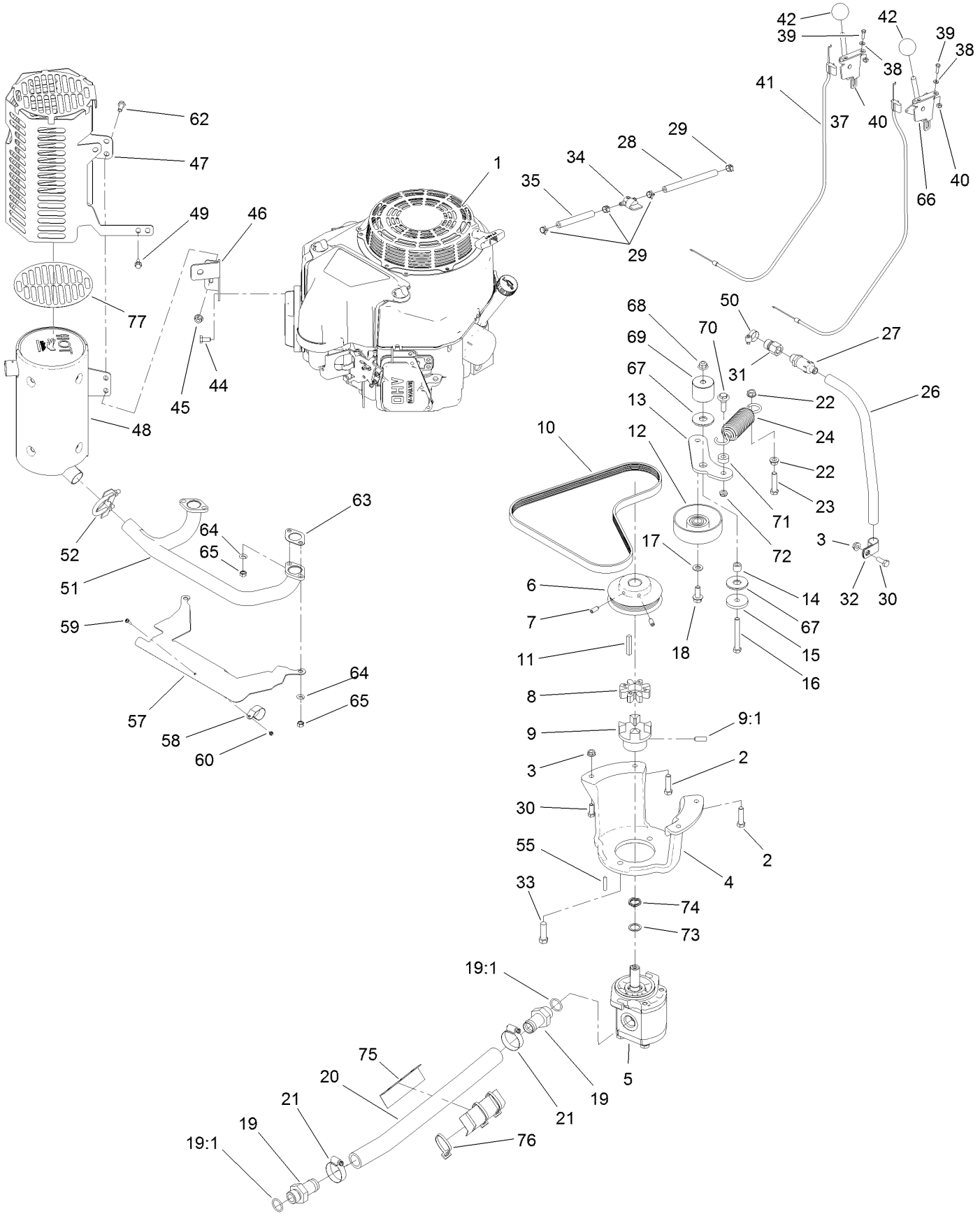

Engine Assembly (continued)

Ref.	Part Number	Qty.	Description
1	117-6448	1	Engine-Kawasaki, Fs481V
2	323-8	4	Screw-HH
3	32128-20	3	Nut-HF
4	115-1480-03	1	Mount-Pump
5	114-3072	1	Gear Pump ASM
6	114-8559-03	1	Pulley-Engine
7	3246-6	2	Screw-Set, HSH
8	93-8827	1	Spider-Coupler
9	114-2933	1	Coupler-Flex
9:1	100-7594	1	Screw-Set
10	114-2991	1	Belt-V
11	608006	1	Key-Square
12	95-8802	1	Pulley-Idler
13	125-0252	1	Arm-Idler
14	1-413088	1	Bushing-Lever, Lift
15	110-9981	1	Washer-Plain
16	323-14	1	Screw-HH
17	3256-24	1	Washer-Flat
18	3234-11	1	Screw-HHF
19	99-3017	2	Fitting
19:1	237-81	1	O-Ring
20	114-2917	1	Hose-Suction
21	2412-111	2	Clamp
22	3290-357	2	Nut-HHF, Whiz
23	323-9	1	Screw-HH
24	121-4523	1	Spring-Extension
26	106-5709	1	Hose-Vent
27	92-6877	1	Valve-Drain, Oil
28	109-0306	1	Hose-Fuel
29	2412-98	4	Clamp-Hose
30	322-5	3	Screw-HH
31	103-1966	1	Adapter
32	2412-81	1	Clamp-R
33	324-6	2	Screw-HH
34	1-603770	1	Valve-Fuel
35	109-0295	1	Hose-Fuel

Ref.	Part Number	Qty.	Description
37	108-9730	1	Lever-Control
38	3256-21	4	Washer-Flat
39	3290-134	4	Screw
40	3296-2	4	Nut-Lock, NI
41	115-1211	2	Cable-Control
42	233-42	2	Knob
44	33114-016	2	Screw-HH
45	112-2844	3	Nut-HF
46	117-6278-03	1	Bracket-Guard, Muffler
47	131-0602-03	1	Guard-Muffler
48	120-7536	1	Muffler
49	33103-016	1	Screw-HHF
50	2412-36	1	Clamp-Hose
51	120-7537	1	Manifold-Muffler
52	2112-11	1	Clamp-Muffler
55	27-8590	1	Key-Square
57	131-0662	1	Plate-Sheld, Heat
58	115-6488	1	Clamp
59	115-6494	1	Screw-Pan
60	115-6495	1	Nut-Hex
62	33114-020	3	Screw-HH
63	1-653313	2	Gasket-Exhaust
64	115-6496	4	Washer-Spring
65	115-6611	4	Nut-Hex
66	110-5547	1	Lever-Control
67	114-0463	2	Washer-Friction, Composite
68	104-8301	1	Nut-Flange, NI
69	125-0251	1	Spacer-Idler
70	614672	1	Bolt-Shoulder
71	104-8426	1	Spacer
72	3296-59	1	Nut-Lock, NI
73	115-7210	1	Washer-Thrust
74	121-4517	1	Washer-Wave
75	AU112950	2	Protector-Hose, 4 Inch
76	3290-378	3	Tie-Cable
77	131-0604	1	Foil-Guard

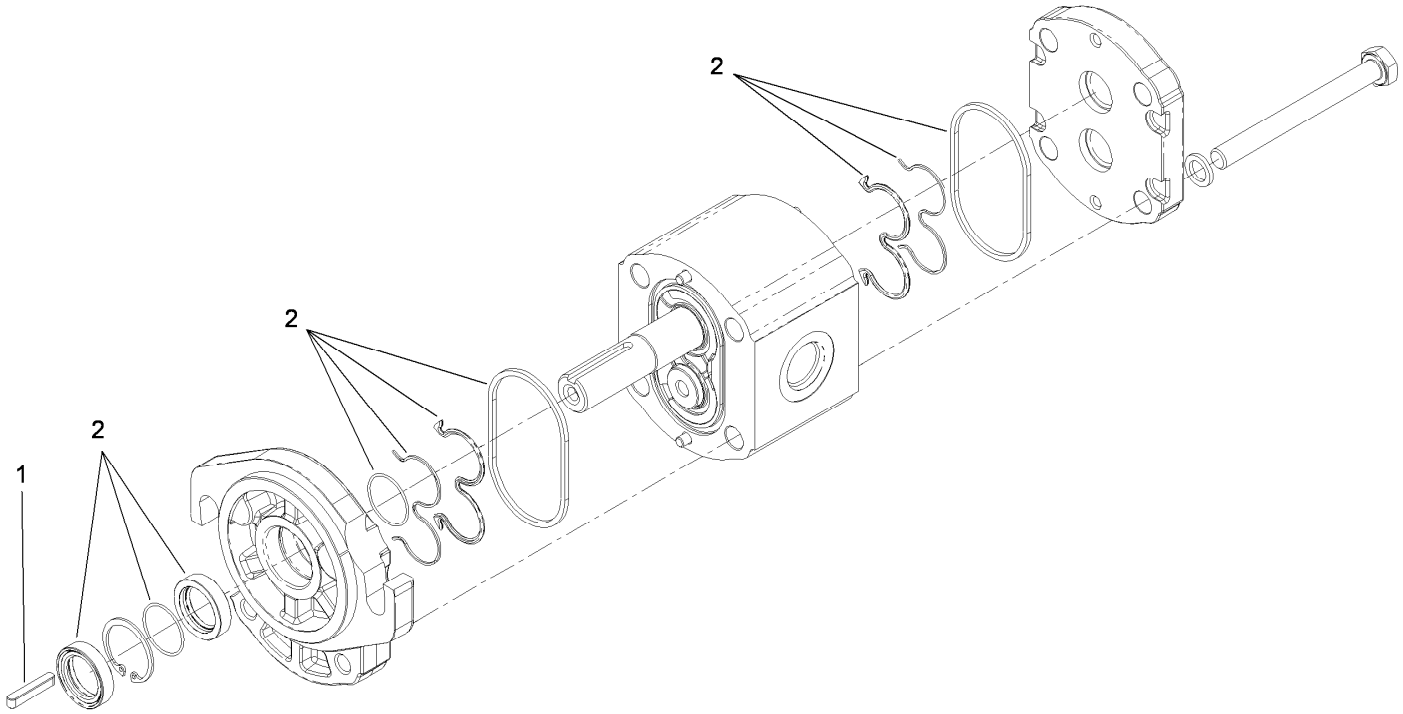

Gear Pump Assembly No. 114-3072

Ref.	*Part Number*	*Qty.*	*Description*
1	104-5839	1	Key-Square
2	115-1265	1	Seal Kit

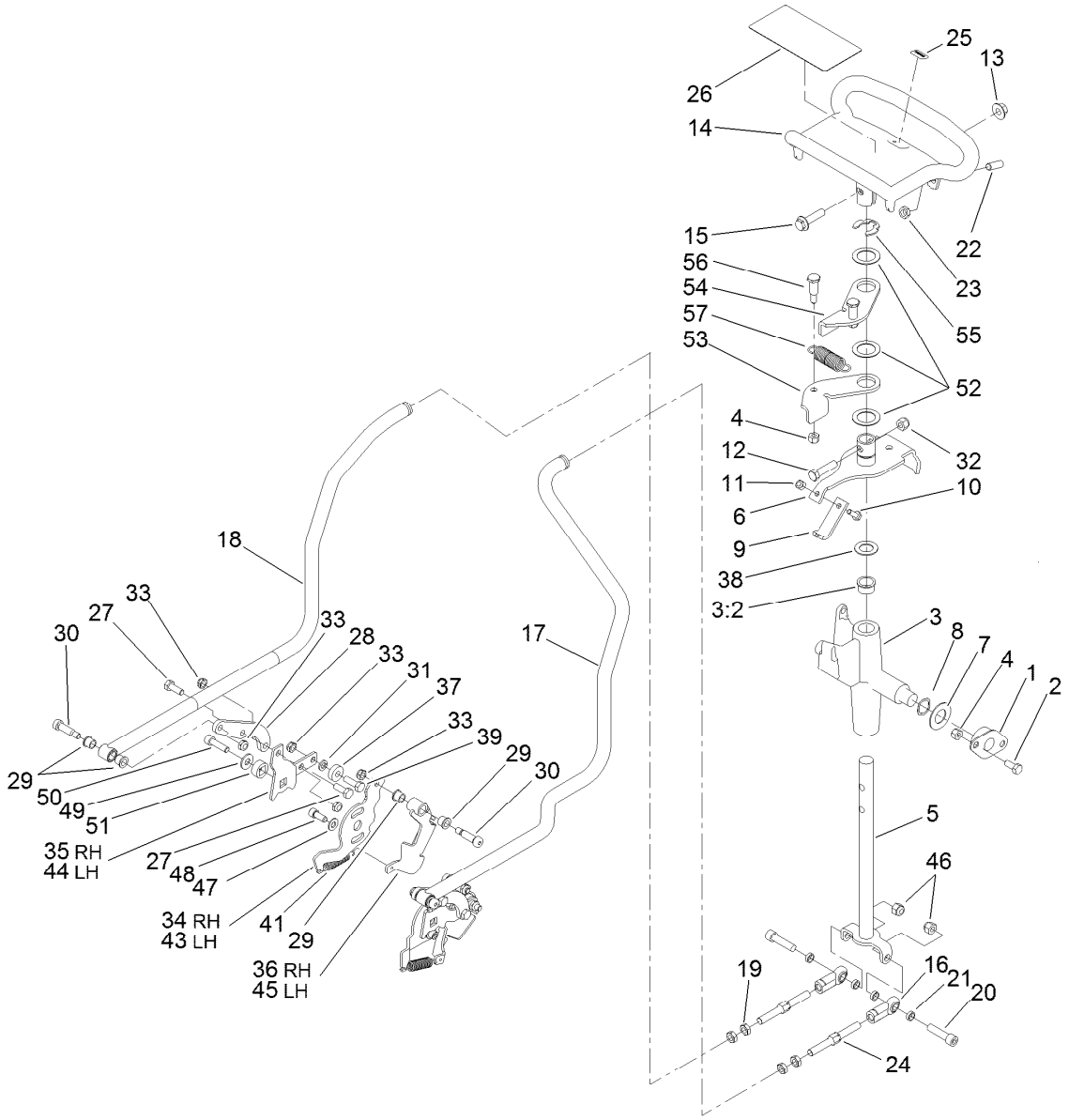

Control Assembly

Ref.	Part Number	Qty.	Description
1	27-2320	2	Bearing
2	322-3	4	Screw-HH
3	106-5737	1	Control Support ASM
3:2	256-252	2	Bearing-Flange
4	3296-29	6	Nut-Lock, NI
5	117-6335	1	Rod-Drive
6	112-2783	1	Lever-Pivot
7	3256-39	2	Washer-Flat
8	95-3703	2	Washer-Spring, Wave
9	115-1204	1	Plate-Neutral
10	321-4	1	Screw-HH
11	3296-42	1	Nut-Lock, NI
12	323-8	1	Screw-HH
13	32128-43	1	Nut-Flange
14	120-5380-03	1	Handle-Control
15	3234-18	1	Screw-HHF
16	103-1167	2	Joint-Ball End, LH
17	121-4508	1	Rod-Control, LH
18	121-4509	1	Rod-Control, RH
19	3220-3	4	Nut-HJ
20	3274-2	2	Screw-HSH

Ref.	Part Number	Qty.	Description
21	108-0634	4	Spacer-Plate, Retaining
22	3247-6	2	Screw-Set
23	3218-3	2	Nut-Jam
24	121-4506	2	Link-Control, Adjustment
25	98-1459	1	Decal
26	115-4020	1	Decal-Traction
27	322-4	4	Screw-HH
28	115-1290	2	Plate-Adapter, Control, RH
29	256-116	8	Bushing-Flange
30	114-8629	4	Bolt-Shoulder
31	3253-4	2	Washer-Lock
32	3296-39	1	Nut-Lock, NI
33	3296-47	10	Nut-Lock, NI
34	115-6535	1	Plate-Base, RH
35	115-6536	1	Plate-Arm, Return
36	115-6636	1	Pivot-RH
37	251-259	2	Bearing-Ball
38	257-8	1	Washer-Thrust
39	322-5	2	Screw-HH
41	121-4409	2	Spring-Extension
43	115-6549	1	Plate-Base, LH

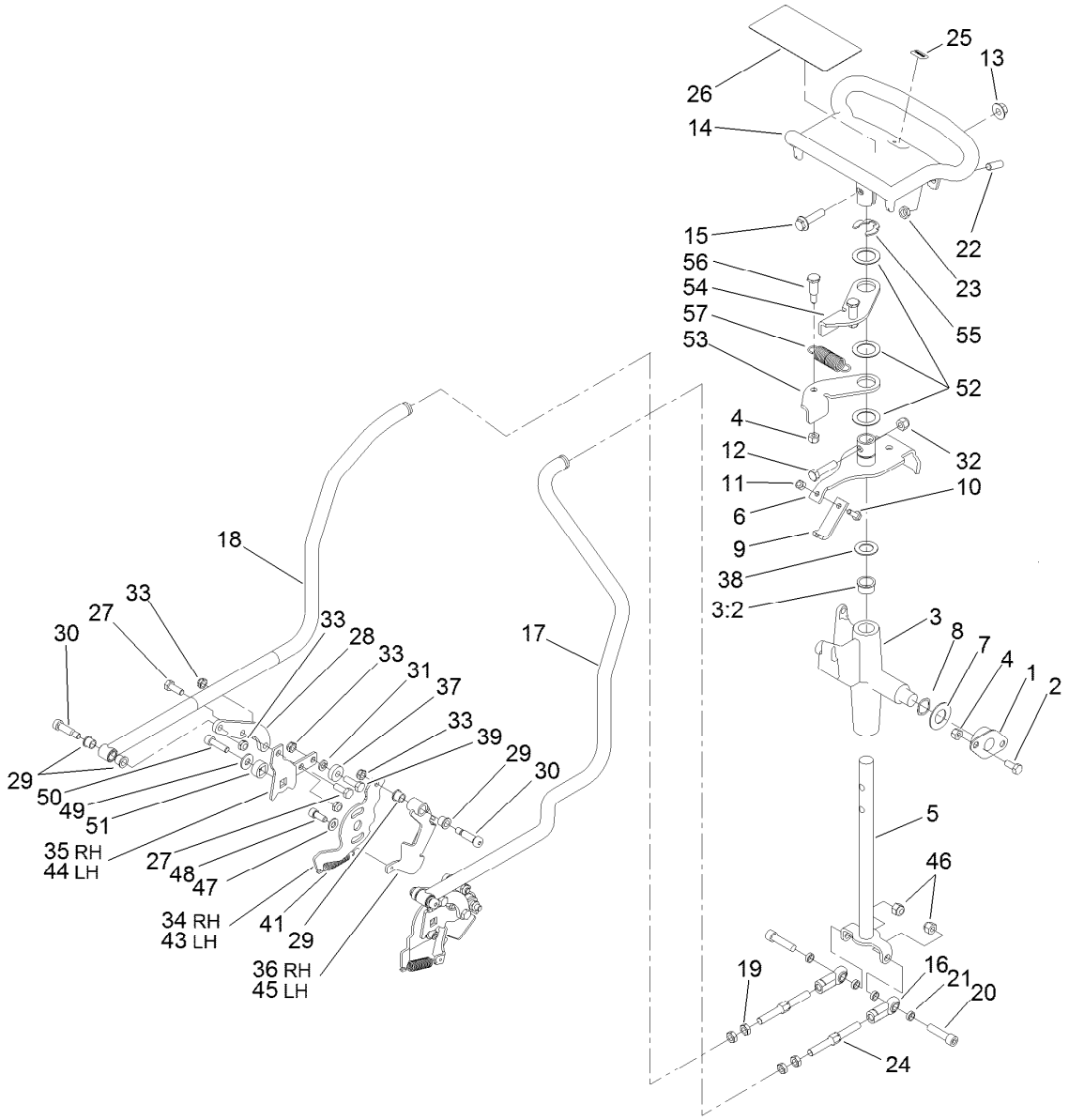

Control Assembly (continued)

Ref.	Part Number	Qty.	Description
44	115-6628	1	Plate-Arm, Return, LH
45	115-6637	1	Pivot-LH
46	3296-39	2	Nut-Lock, NI
47	3290-456	2	Washer-Belleville
48	3273-14	2	Screw-HSH
49	3256-3	2	Washer-Flat
50	94-3559	2	Screw-HSH

Ref.	Part Number	Qty.	Description
51	117-6429	2	Lock-Trunion
52	108-9743	3	Washer-Plain
53	98-8407	1	Lever-Return, RH
54	98-8408	1	Lever-Return, LH
55	32151-91	1	Ring-Retaining
56	63-2650	2	Screw-Shoulder
57	108-4724	1	Spring-Extension

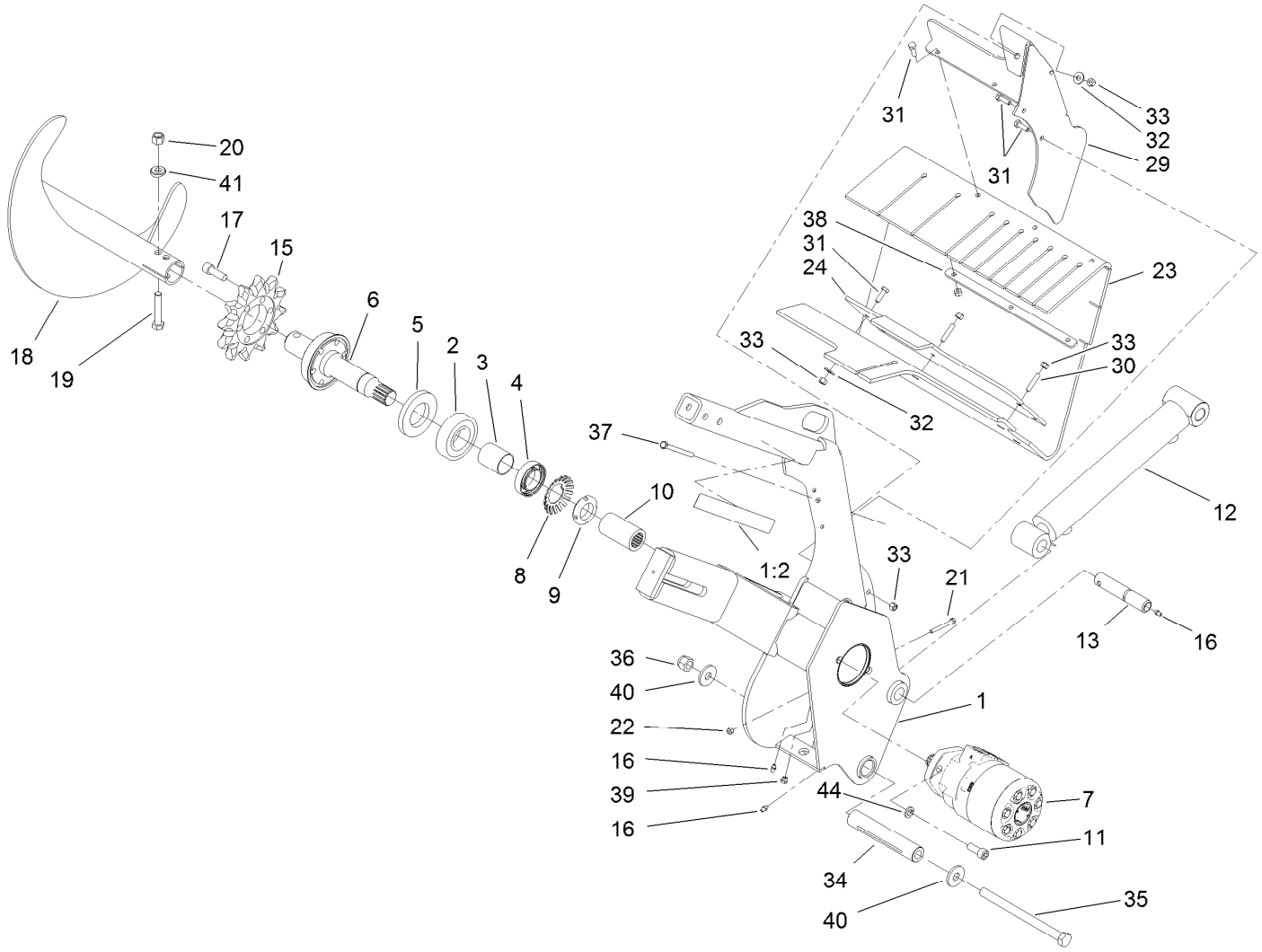

Trencher Assembly

Ref.	Part Number	Qty.	Description
1	117-6423	1	Trencher Head ASM
1:2	99-9952	2	Decal-Danger
2	106-8871	1	Bearing-Ball
3	112-4979	1	Spacer
4	111199	1	Bearing-Ball
5	114-2955	1	Seal-Grease
6	117-6308	1	Shaft-Trencher
7	131-0652	1	HYD Motor ASM
8	114-2956	1	Lockwasher-Bearing
9	88-1450	1	Locknut-Bearing
10	117-6315	1	Collar-Splined
11	3274-4	2	Screw-HSH
12	121-1955	1	HYD Cylinder ASM
13	120-7352	1	Pin-Pivot
15	104-1964	1	Sprocket-Trencher
16	302-5	3	Fitting-Grease
17	3274-4	6	Screw-HSH
18	117-8852-03	1	Auger-Trencher
19	325-13	1	Screw-HH

Ref.	Part Number	Qty.	Description
20	3296-23	1	Nut-Lock, NI
21	321-18	1	Screw-HH
22	3296-42	1	Nut-Lock, NI
23	117-6317	1	Shield-Dirt
24	117-6316-03	1	Bar-Clamp
29	115-1279-03	1	Bracket-Shield
30	115-4049	2	Screw-HSH
31	322-5	8	Screw-HH
32	3256-3	4	Washer-Flat
33	3296-29	11	Nut-Lock, NI
34	121-4571	1	Spacer-Pivot
35	117-6327	1	Bolt-HH
36	3296-53	1	Nut-Lock, NI
37	322-23	1	Screw-HH
38	115-4001-03	1	Plate-Strap, Shield
39	302-34	1	Fitting-Lube
40	104-9216	2	Washer-Hardened
41	117-3479	2	Washer-Saddle
44	3253-7	2	Washer-Lock

Control Tower Assembly

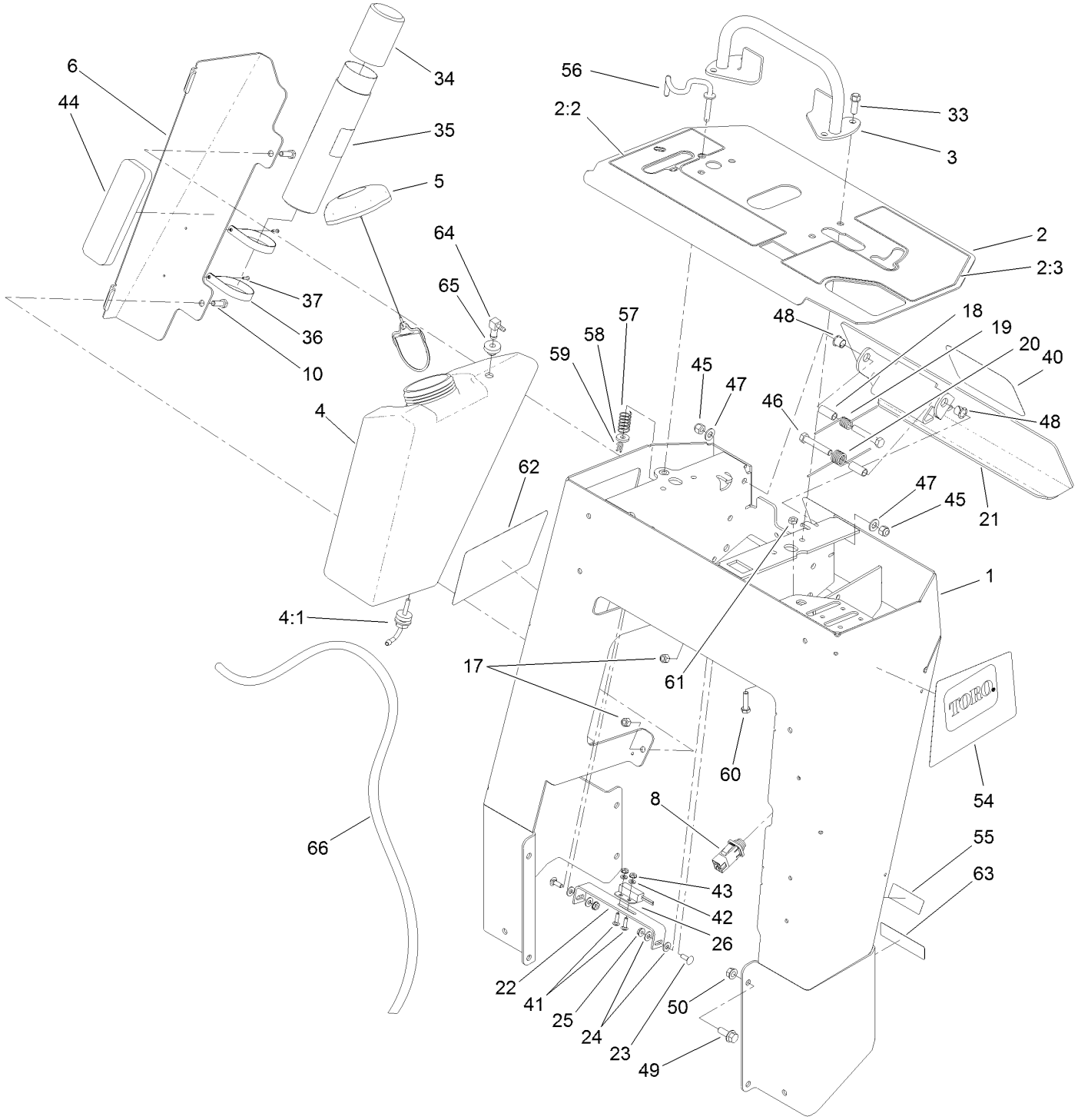

Control Tower Assembly (continued)

Ref.	Part Number	Qty.	Description
1	117-6419-01	1	Tower
2	117-6389	1	Panel-Control
2:2	115-1231	1	Decal-Console, RH
2:3	115-1230	1	Decal-Console, LH
3	106-7715	1	Bar-Reference
4	120-7357	1	Tank-Fuel
4:1	103-2605	1	Fitting-Fuel, Bulkhead
5	120-5461	1	Cap-Fuel, Ratcheting
6	114-3065-01	1	Bracket-Cover, Tank
8	100-1268	1	Switch-Plunger
10	322-5	2	Screw-HH
17	3296-29	2	Nut-Lock, NI
18	114-1337	2	Spacer-Spring
19	98-8425	1	Spring-Torsion, LH
20	98-8424	1	Spring-Torsion, RH
21	114-3012-03	1	Plate-Reverse
22	100-1263	1	Plate-Switch
23	3229-1	2	Bolt-CARR
24	3256-22	4	Washer-Flat
25	32149-2	2	Nut-Keps
26	100-1270	1	Switch-Proximity
33	95-1726	4	Screw-Taptite
34	104-7048	1	Cap-Housing
35	104-7050	1	Tube-Manual
36	2412-120	2	Clamp-R

Ref.	Part Number	Qty.	Description
37	3269-17	2	Rivet-Pop
40	105-1217	1	Decal
41	3229-20	2	Screw-CARR
42	3256-51	2	Washer-Flat
43	32149-7	2	Nut-Keps
44	107-7507	1	Pad-Foam
45	3296-39	2	Nut-Lock, NI
46	323-11	2	Screw-HH
47	3256-24	2	Washer-Flat
48	256-257	2	Bushing-Nyliner
49	3234-11	8	Screw-HHF
50	32128-40	8	Nut-Flange
54	117-6281	1	Decal-Side, LH
55	120-7531	1	Decal-Info
56	114-8727	1	Rod-Interlock
57	85-6750	1	Spring-Control
58	88-7200	1	Washer-Flat
59	3290-307	1	Pin-Cotter
60	3210-7	1	Screw-HH
61	3220-2	2	Nut-Jam
62	117-6270	1	Decal-Side, RH
63	117-2718	1	Decal-Arrester, Spark
64	104-5228	1	Fitting-Elbow, 90 DEG
65	46-6560	1	Bushing
66	117-6396	1	Hose-Vent, Tank

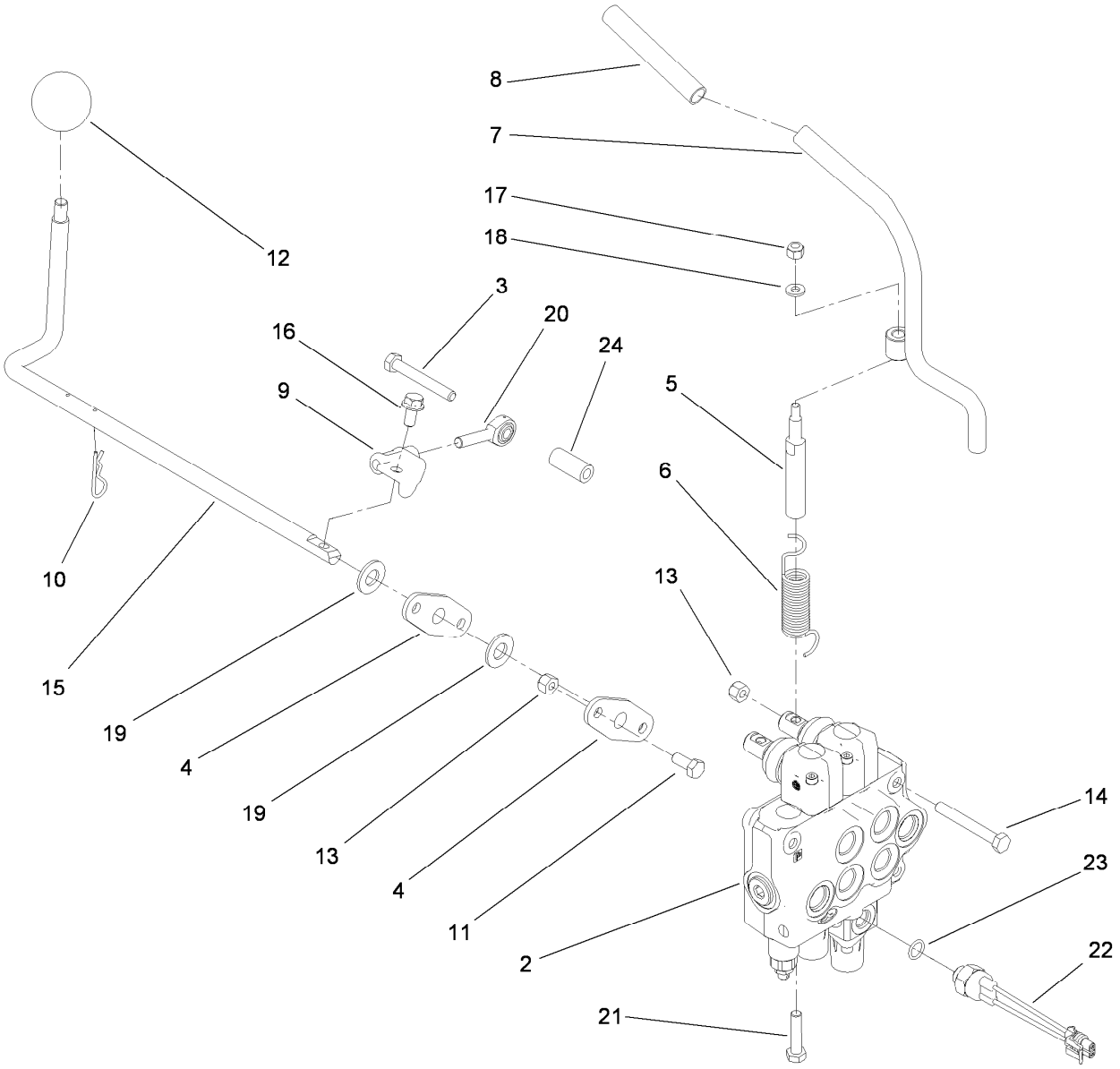

Hydraulic Control Assembly

Ref.	Part Number	Qty.	Description
2	115-4062	1	HYD Valve ASM
3	33114-060	1	Screw-HH
4	20-1620	2	Bearing-Wheel, Friction
5	104-2827	1	Spacer-Hiflo
6	112-2738	1	Spring-Torsion
7	112-2739	1	Lever-Auxiliary
8	112-2605	1	Grip-Rubber
9	112-7210	1	Bracket-Control
10	3290-467	2	Pin-Hair
11	322-3	4	Screw-HH
12	233-21	1	Knob
13	3296-29	7	Nut-Lock, NI

Ref.	Part Number	Qty.	Description
14	322-12	3	Screw-HH
15	114-8598	1	Rod-Lever, Cylinder
16	3234-14	1	Screw-HHF
17	3296-42	1	Nut-Lock, NI
18	3256-16	1	Washer-Flat
19	3256-26	2	Washer-Flat
20	115-1273	1	Bearing-Rod End
21	48-7740	1	Screw
22	72-4310	1	Switch-Ball
23	237-42	1	O-Ring
24	103-0384	1	Spacer

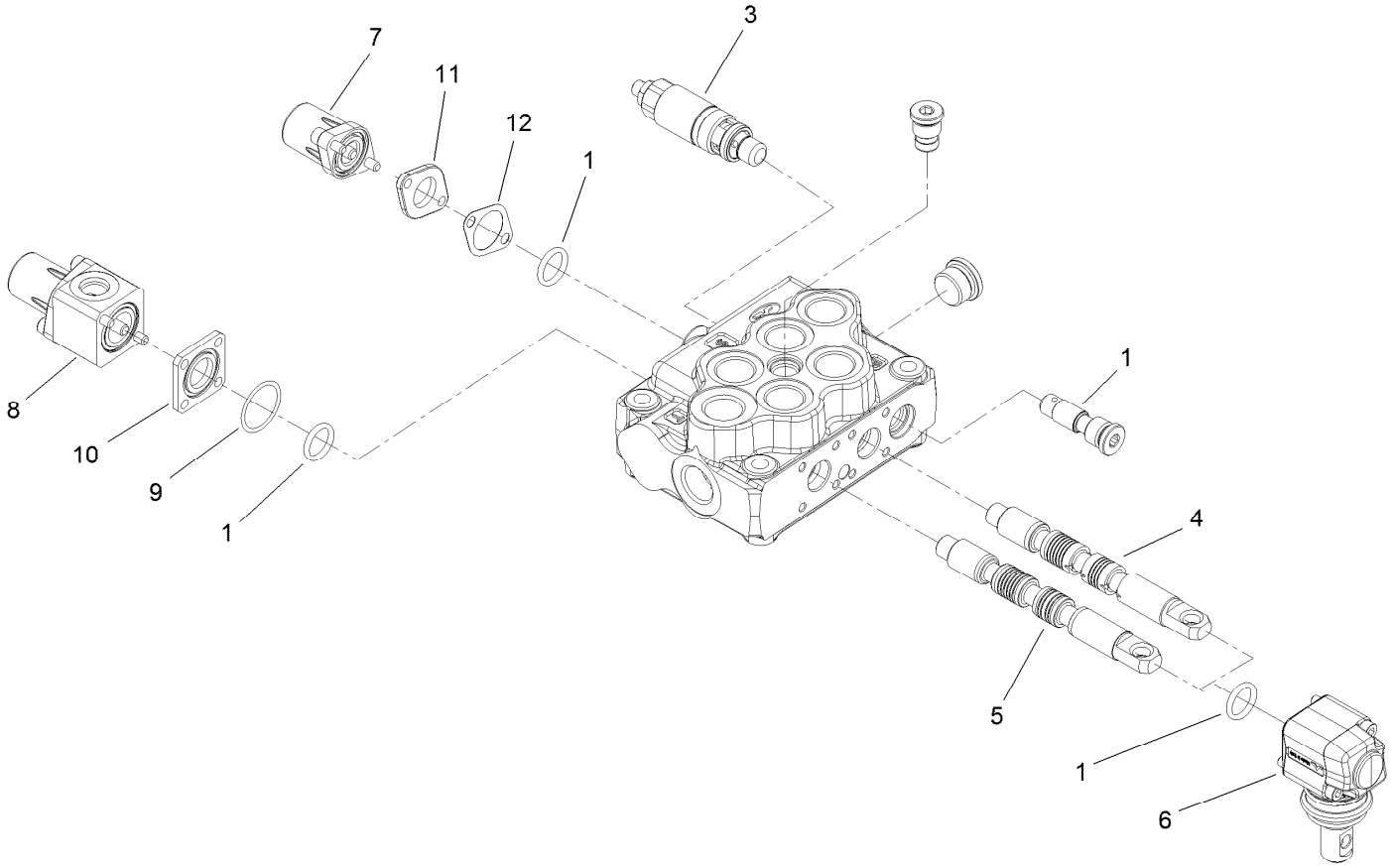

2-Spool Valve Assembly No. 115-4062

Ref.	*Part Number*	*Qty.*	*Description*
1	106-7719	4	Seal-Valve
3	100-8805	1	Valve-Relief
4	115-4084	1	Spool-Valve
5	106-7572	1	Spool
6	100-7229	2	Lever Kit
7	115-4092	1	Spring Return Kit
8	115-4093	1	Switch Spring Return Kit
9	115-4097	1	Seal-Return
10	115-4094	1	Spacer-Square
11	115-4089	1	Spacer-Spring Return
12	115-4088	1	Gasket-Return

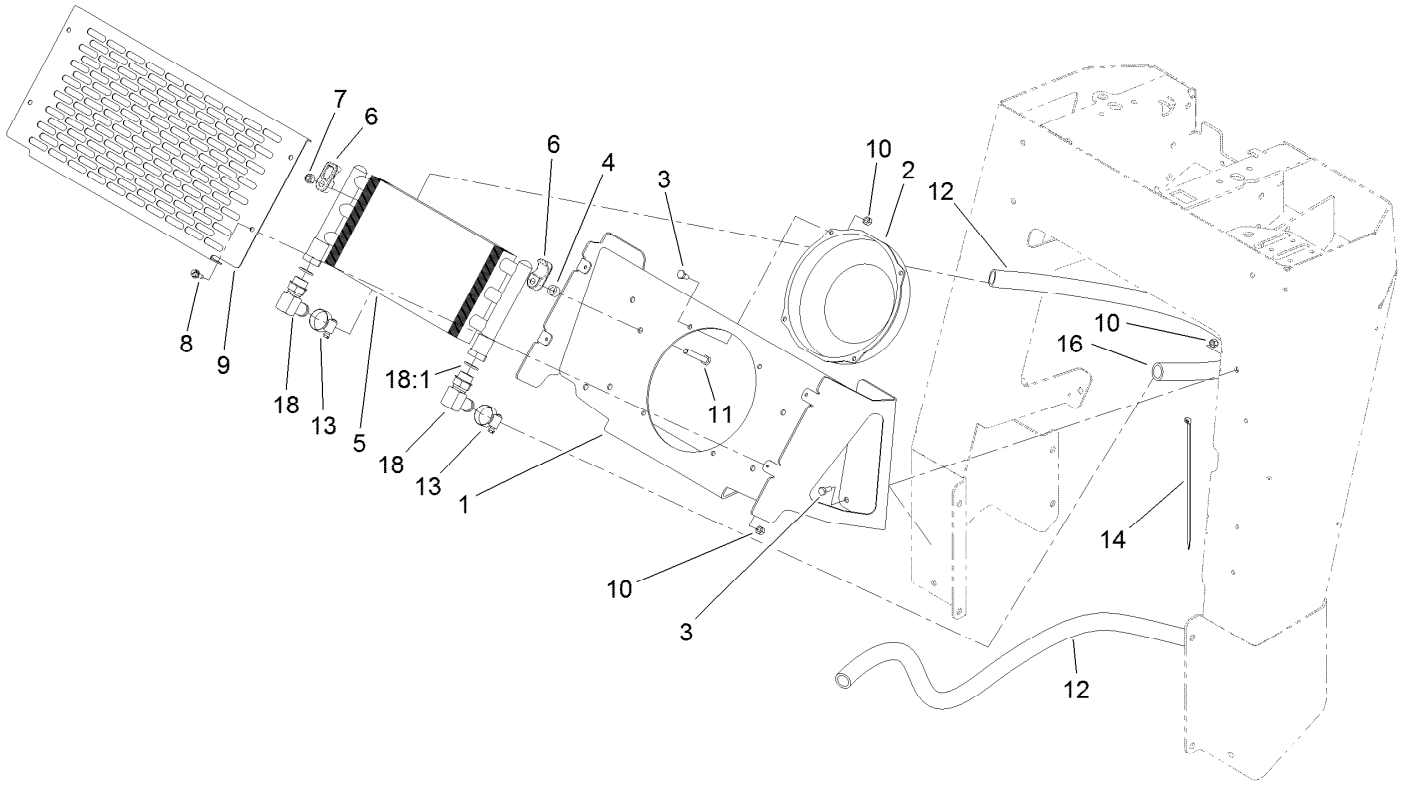

Oil Cooler Assembly

Ref.	Part Number	Qty.	Description
1	117-6296-01	1	Mount-Cooler
2	104-2809	1	Fan
3	321-3	12	Screw-HH
4	98-4695	4	Spacer
5	105-0352	1	Exchanger-Heat
6	131-0733	8	Clamp-Cooler, Oil
7	3296-29	4	Nut-Lock, NI
8	32104-95	4	Screw-HWH
9	119-4633-01	1	Cover-Cooler

Ref.	Part Number	Qty.	Description
10	3296-42	12	Nut-Lock, NI
11	322-11	4	Screw-HH
12	115-1207	1	Hose-Return
13	2412-129	2	Clamp-Hose
14	3334-945	1	Tie-Cable
16	117-3966	1	Hose-Cooler
18	87-8170	2	Fitting
18:1	237-80	1	O-Ring

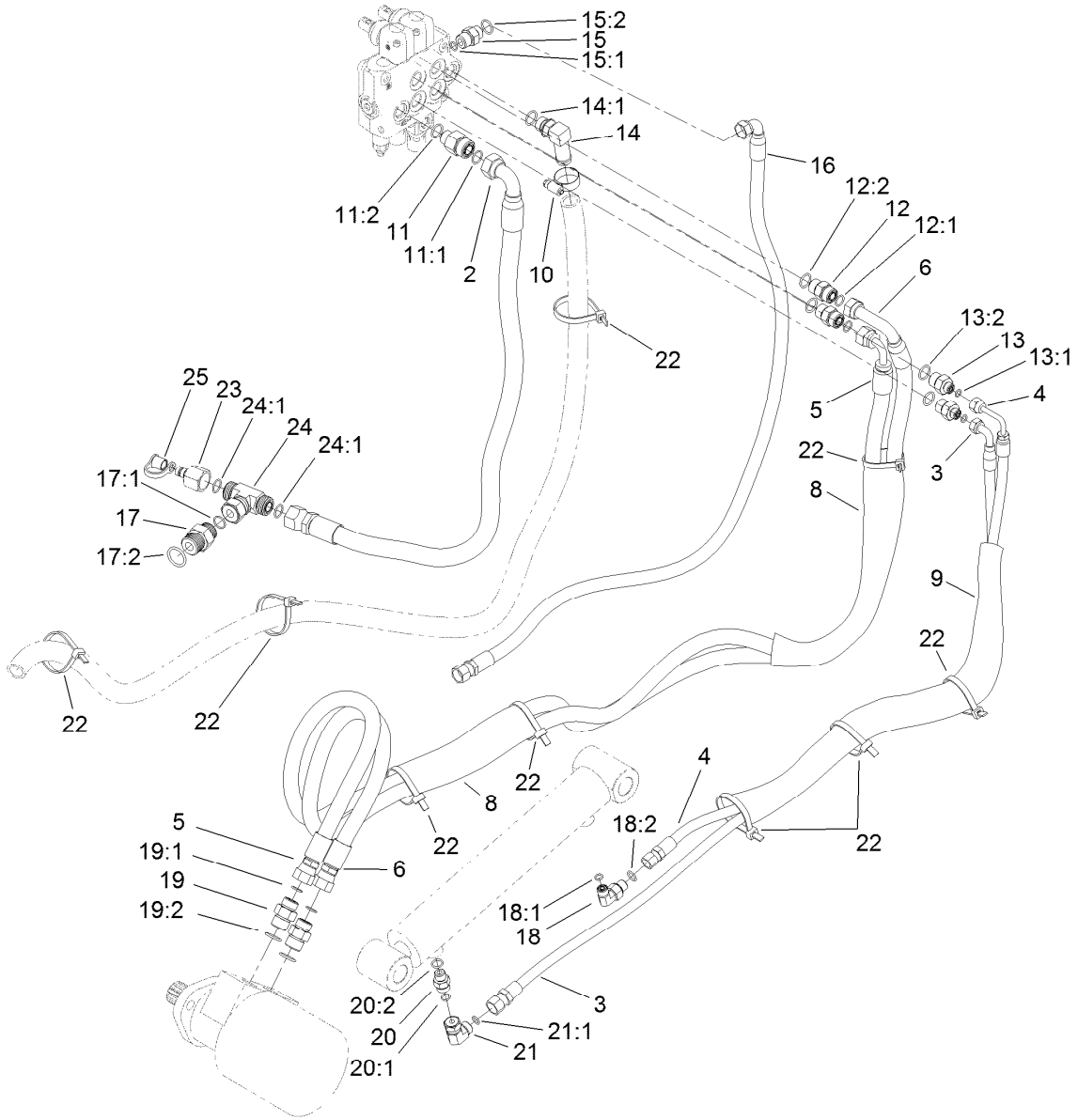

Hydraulic Routing Assembly

Ref.	Part Number	Qty.	Description
2	114-3043	1	Hose-HYD
3	114-3044	1	Hose-HYD
4	114-3045	1	Hose-HYD
5	114-3046	1	Hose-HYD
6	114-3085	1	Hose-HYD
8	99-5648	2	Sleeve-Protective
9	115-4064	1	Sleeve-Protective
10	2412-129	2	Clamp-Hose
11	340-155	1	Fitting-HYD, Straight
11:1	237-79	1	O-Ring
11:2	237-151	1	O-Ring
12	340-4	2	Fitting-HYD, Straight
12:1	237-30	1	O-Ring
12:2	237-79	1	O-Ring
13	340-133	2	Adapter ASM
13:1	237-79	1	O-Ring
13:2	237-21	1	O-Ring
14	353-954	1	Adapter
14:1	237-79	1	O-Ring
15	340-3	1	Adapter
15:1	237-22	1	O-Ring

Ref.	Part Number	Qty.	Description
15:2	237-79	1	O-Ring
16	117-4038	1	Hose ASM
17	340-8	1	Adapter
17:1	237-65	1	O-Ring
17:2	237-81	1	O-Ring
18	340-82	1	Fitting-HYD, 90
18:1	237-42	1	O-Ring
18:2	237-21	1	O-Ring
19	340-6	2	Fitting-HYD, Straight
19:1	237-30	1	O-Ring
19:2	237-80	1	O-Ring
20	115-4081	1	Valve-Check
20:1	237-42	1	O-Ring
20:2	237-22	1	O-Ring
21	340-159	1	Fitting-HYD, 90 DEG
21:1	237-22	2	O-Ring
22	3334-945	9	Tie-Cable
23	86-5860	1	Nipple
24	340-167	1	Fitting-HYD, Tee
24:1	237-65	2	O-Ring
25	354-79	1	Cap-Dust

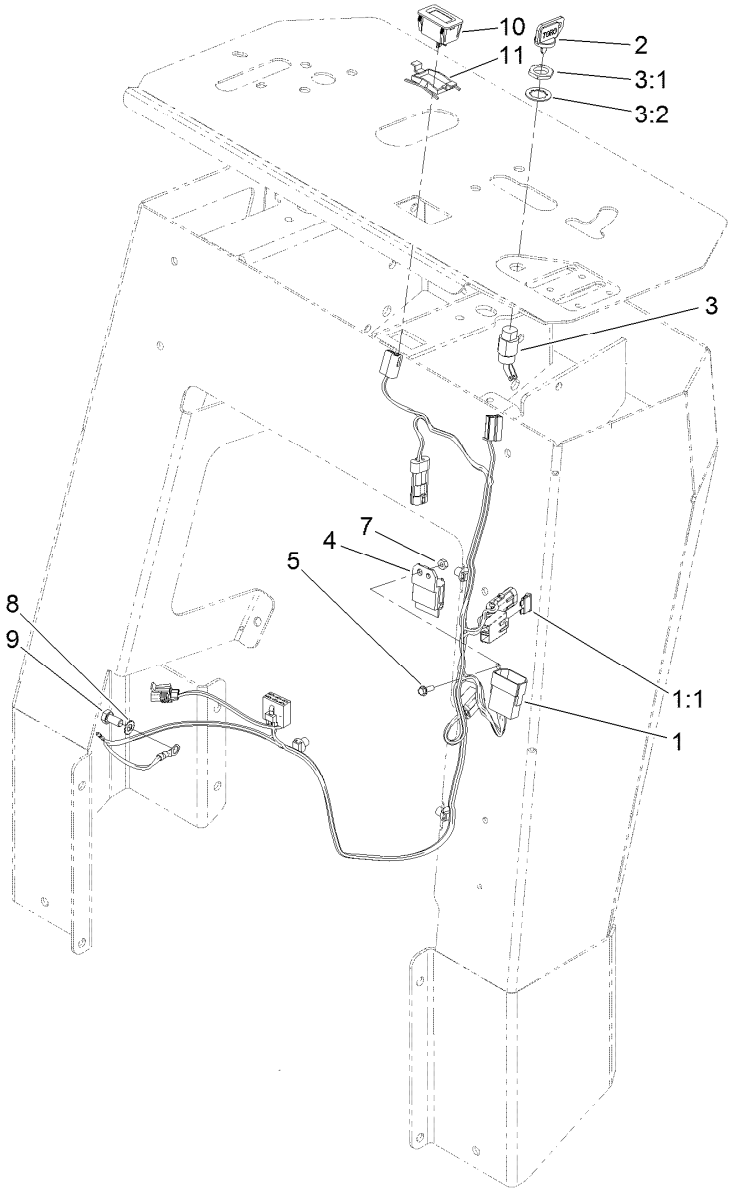

Electrical Assembly

Ref.	Part Number	Qty.	Description
1	117-6287	1	Harness-Wire
1:1	109355	1	Fuse-Blade, 15 Amp
2	63-8360	1	Key-Ignition
3	29-5560	1	Switch-On / Off
3:1	218-461	1	Nut-HH
3:2	3254-5	1	Washer-Tooth, Internal
4	1-323430	1	Module-Interlock
5	32105-23	1	Screw
7	3296-2	1	Nut-Lock, NI
8	3255-8	2	Washer-Lock
9	33114-016	1	Screw-HH
10	120-2244	1	Hourmeter
11	104-4234	1	Clip-Mounting

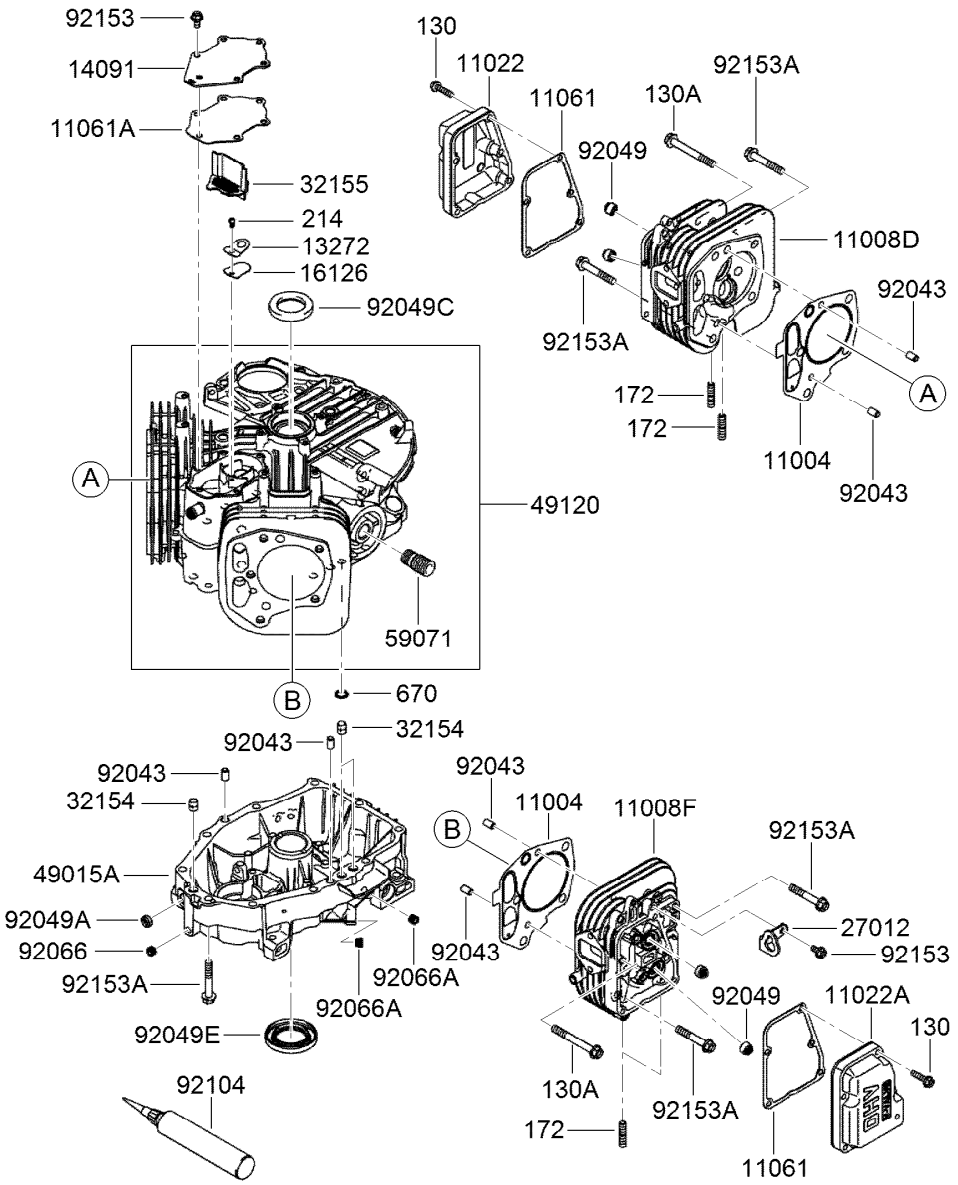

Cylinder and Crankcase Assembly

Ref.	Part Number	Qty.	Description
130	93-8548	10	Bolt-Flanged (6X25)
130A	120-7406	6	Bolt-Flanged (8X70)
172	114-8658	4	Bolt-Stud (8X18)
214	115-6422	1	Screw-Pan (4X8)
670	95-9771	2	O-Ring (11Mm)
11004	120-7400	2	Gasket-Head
11008D	120-7401	1	Cylinder Head No. 1 ASM
11008F	120-7402	1	Cylinder Head No. 2 ASM
11022	119-5803	1	Case-Rocker (No.1)
11022A	119-5804	1	Case-Rocker (No.2)
11061	119-5805	2	Gasket-Case, Rocker
11061A	119-5806	1	Gasket-Breather
13272	119-5808	1	Plate-Breather
14091	119-5809	1	Cover-Breather
16126	119-5810	1	Valve-Breather
27012	120-7403	1	Hook-Lift

Ref.	Part Number	Qty.	Description
32154	119-5811	3	Pipe
32155	119-5812	1	Pipe-Breather
49015A	120-7404	1	Cover-Crankcase
49120	120-7405	1	Crankcase ASM
59071	95-9715	1	Joint
92043	KW10694	6	Pin
92049	114-8650	4	Seal-Oil, Rv C2 (6X11X10.2)
92049A	119-5816	1	Seal-Oil, So (8X14X5) Hs
92049C	114-8652	1	Seal-Oil, S D (35X48X8 R HSH)
92049E	119-5818	1	Seal-Oil (38X62X8) Mtclv
92066	119-5819	1	Plug
92066A	119-5820	2	Plug
92104	119-5821	1	Gasket-Liquid (Tb1217H)
92153	114-8655	7	Bolt (6X12)
92153A	114-8656	14	Bolt (8X50)

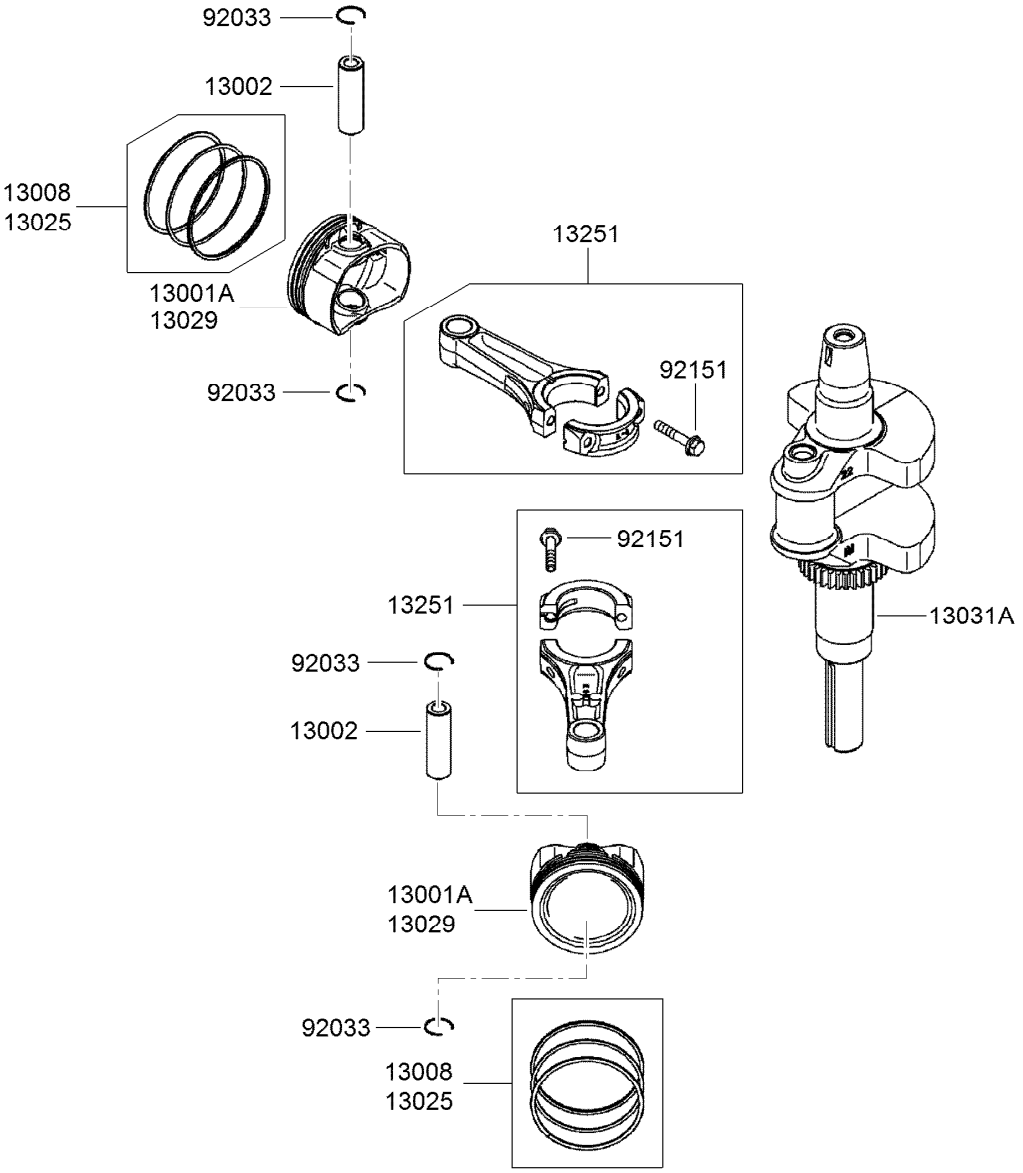

Piston and Crankshaft Assembly

Ref.	Part Number	Qty.	Description
13001A	120-7407	2	Piston-Engine
13002	108-2517	2	Pin-Piston
13008	120-7408	2	Piston Ring Set
13025	120-7409	1	Piston Ring Set (L,0.5)
13029	120-7410	1	Piston Ring Set (L,0.5)
13031A	120-7411	1	Crankshaft ASM
13251	120-7412	2	Connecting Rod ASM
92033	114-8665	4	Ring-Snap
92151	115-6565	4	Bolt (6X35)

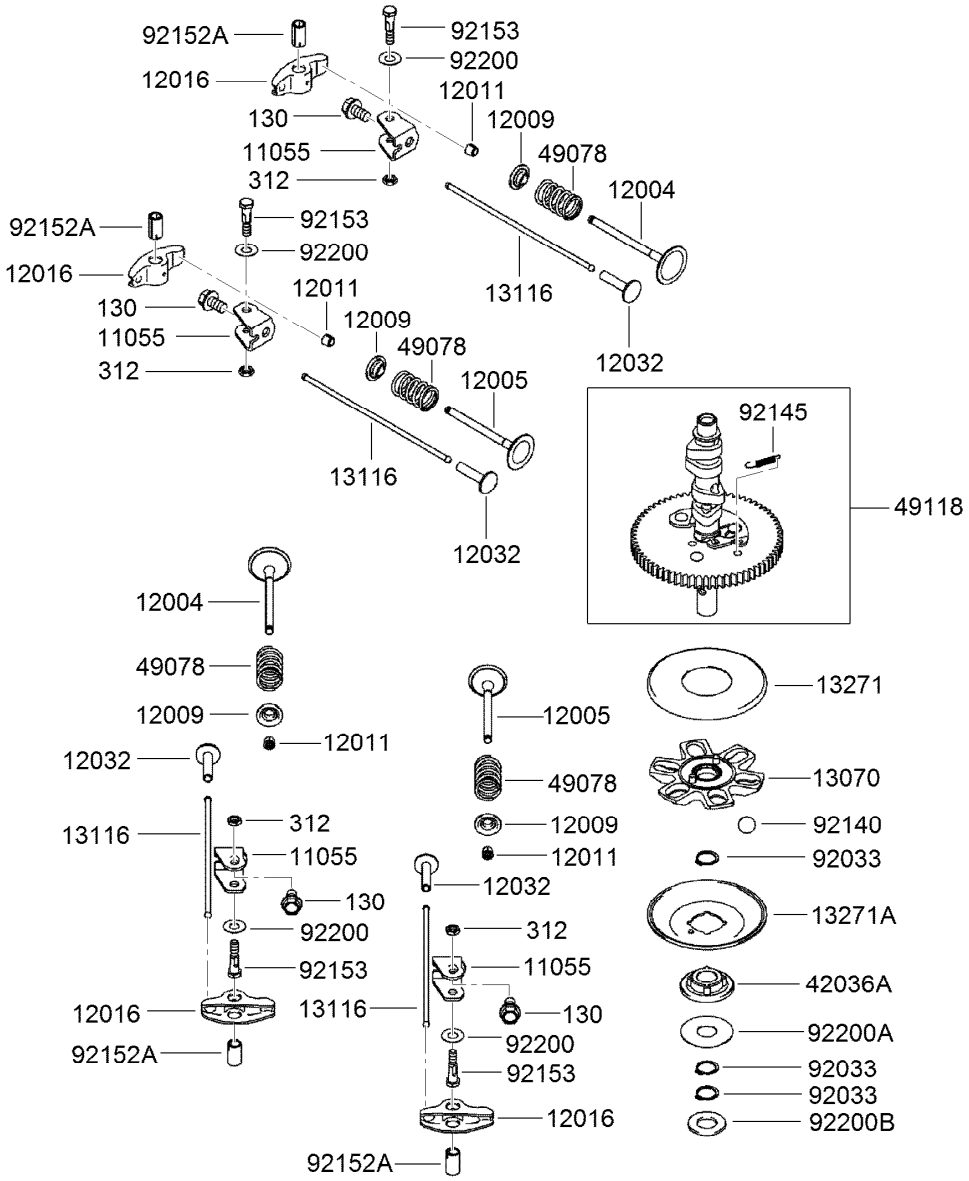

Valve and Camshaft Assembly

Ref.	Part Number	Qty.	Description
130	119-5845	4	Bolt-Flanged (8X14)
312	119-5846	4	Nut-Hex (6Mm)
11055	119-5832	4	Bracket
12004	120-7413	2	Valve-Intake
12005	120-7414	2	Valve-Exhaust
12009	108-2525	4	Retainer-Spring, Valve
12011	95-9744	8	Collet
12016	119-5835	4	Arm-Rocker
12032	108-2527	4	Tappet
13070	119-5836	1	Guide-Govenor
13116	120-7415	4	Rod-Push
13271	114-8671	1	Plate

Ref.	Part Number	Qty.	Description
13271A	114-8672	1	Plate-Governor
42036A	120-7416	1	Sleeve
49078	119-5838	4	Spring-Valve, Engine (In)
49118	120-7417	1	Camshaft ASM
92033	114-8675	3	Ring-Snap
92140	114-8676	6	Ball
92145	114-8677	1	Spring
92152A	120-7418	4	Collar
92153	119-5841	4	Bolt (6X29.5)
92200	119-5842	4	Washer (8.1X18X0.5)
92200A	119-5843	1	Washer (16X42X0.91)
92200B	119-5844	1	Washer (16.3X30X2.28)

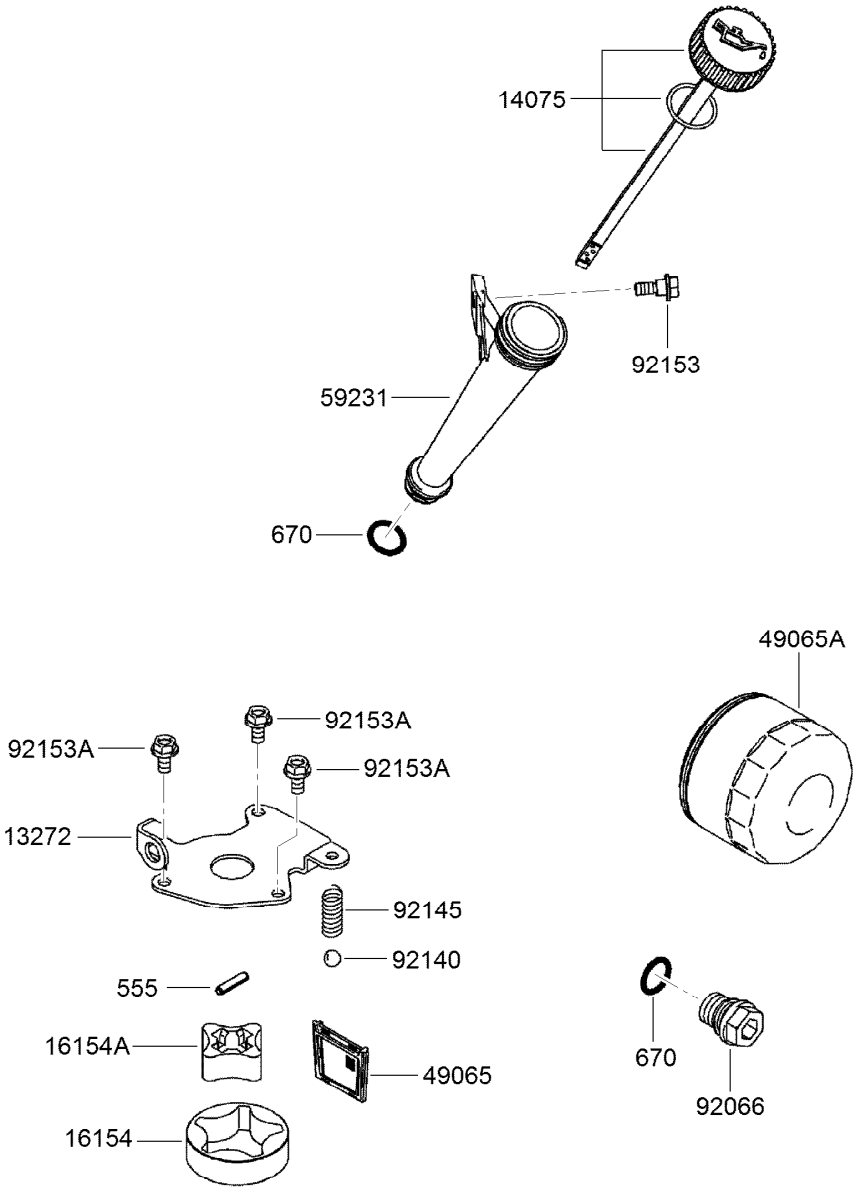

Lubrication Equipment Assembly

Ref.	*Part Number*	*Qty.*	*Description*
555	119-5859	1	Pin-Spring (4X20)
670	1-413506	2	Discontinued
13272	119-5847	1	Plate-Rotor
14075	119-5848	1	Oil Gauge Cap ASM
16154	119-5849	1	Rotor-Pump, Outer
16154A	119-5850	1	Rotor-Pump, Inner
49065	119-5851	1	Filter-Oil
49065A	119-5852	1	Filter-Oil
59231	119-5853	1	Tube-Filler, Oil
92066	119-5854	1	Plug
92140	119-5856	1	Ball
92145	119-5857	1	Spring
92153	114-8697	1	Bolt
92153A	115-6419	3	Bolt (6X12)

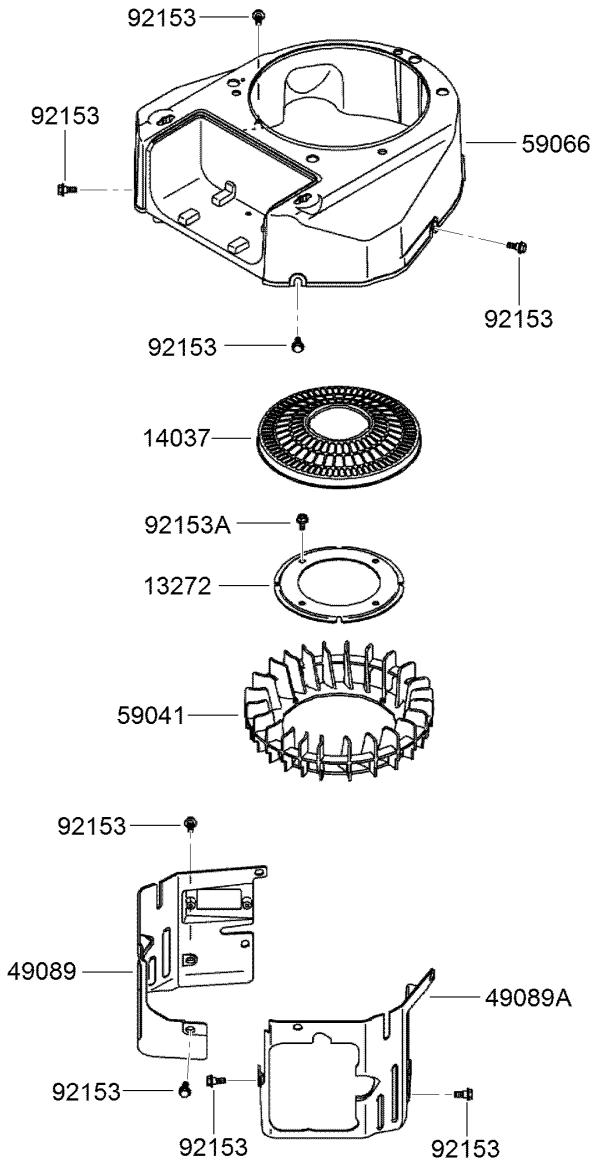

Cooling Equipment Assembly

Ref.	*Part Number*	*Qty.*	*Description*
13272	119-5860	1	Plate-Fan
14037	120-7419	1	Screen
49089	120-7420	1	Shroud-Engine
49089A	120-7421	1	Shroud-Engine
59041	120-7422	1	Fan
59066	120-7423	1	Housing-Fan
92153	120-7424	8	Bolt
92153A	114-8655	4	Bolt (6X12)

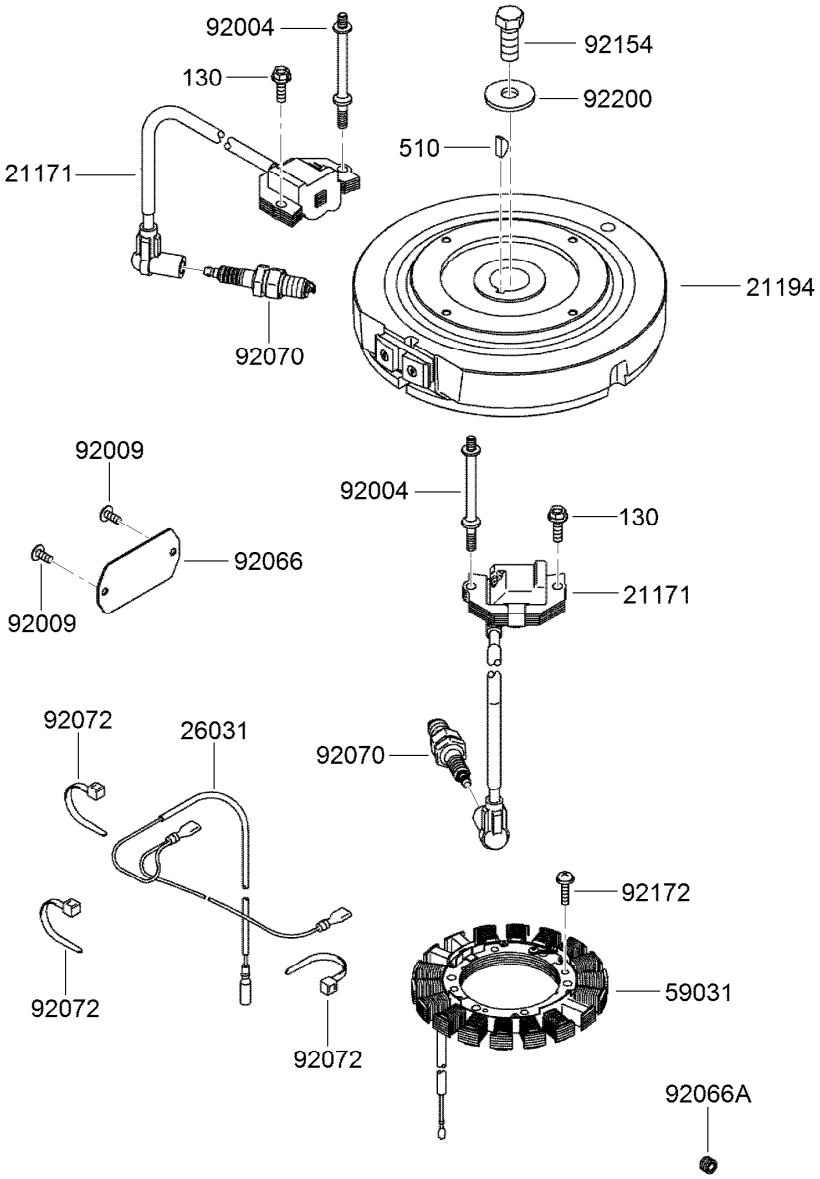

Electric Equipment Assembly

Ref.	Part Number	Qty.	Description
130	95-9893	2	Bolt-Flanged (6X20)
510	KW10163	1	Key-Woodruff
21171	119-5872	2	Ignition Coil ASM
21194	120-7425	1	Flywheel ASM
26031	119-5876	1	Harness
59031	120-7476	1	Coil-Charging
92004	120-7426	2	Stud (6X74.6)
92009	95-9716	2	Screw
92066	115-6406	1	Plug
92066A	119-5820	1	Plug
92070	92-2153	2	Spark Plug
92072	115-6585	3	Band
92154	120-7427	1	Bolt (12X30)
92172	115-4030	4	Screw (5X20)
92200	115-4031	1	Washer (12.2X46X3)

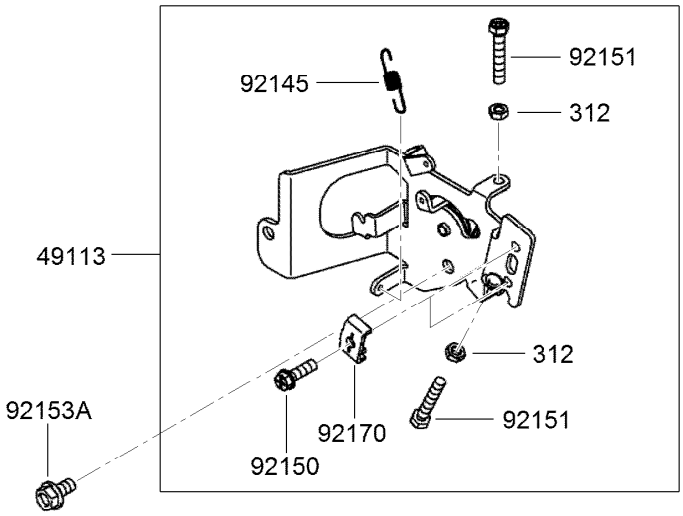

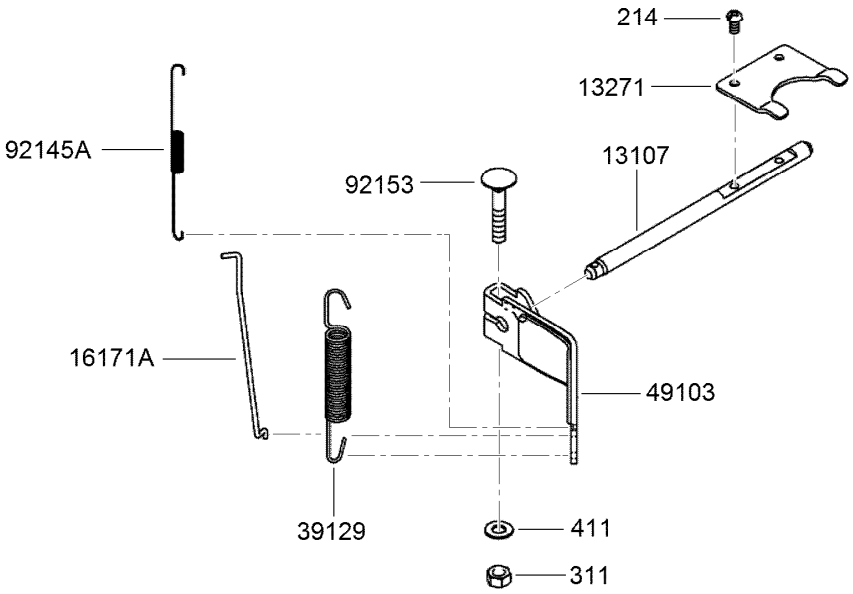

Control Equipment Assembly

Ref.	Part Number	Qty.	Description
214	115-6422	2	Screw-Pan (4X8)
311	114-8698	1	Nut-Hex (6Mm)
312	119-5894	2	Nut-Hex (5Mm)
411	115-6423	1	Washer-Plain (6Mm)
13107	120-7428	1	Shaft
13271	119-5883	1	Plate
16171A	120-7429	1	Link
39129	120-7430	1	Spring-Governor
49103	120-7431	1	Arm-Governor

Ref.	Part Number	Qty.	Description
49113	120-7432	1	Control Panel ASM
92145	115-6418	1	Spring
92145A	119-5889	1	Spring
92150	95-9853	2	Bolt (5X18)
92151	119-5891	2	Bolt (5X30)
92153	115-6420	1	Bolt (6X35)
92153A	114-8655	1	Bolt (6X12)
92170	115-6421	2	Clamp

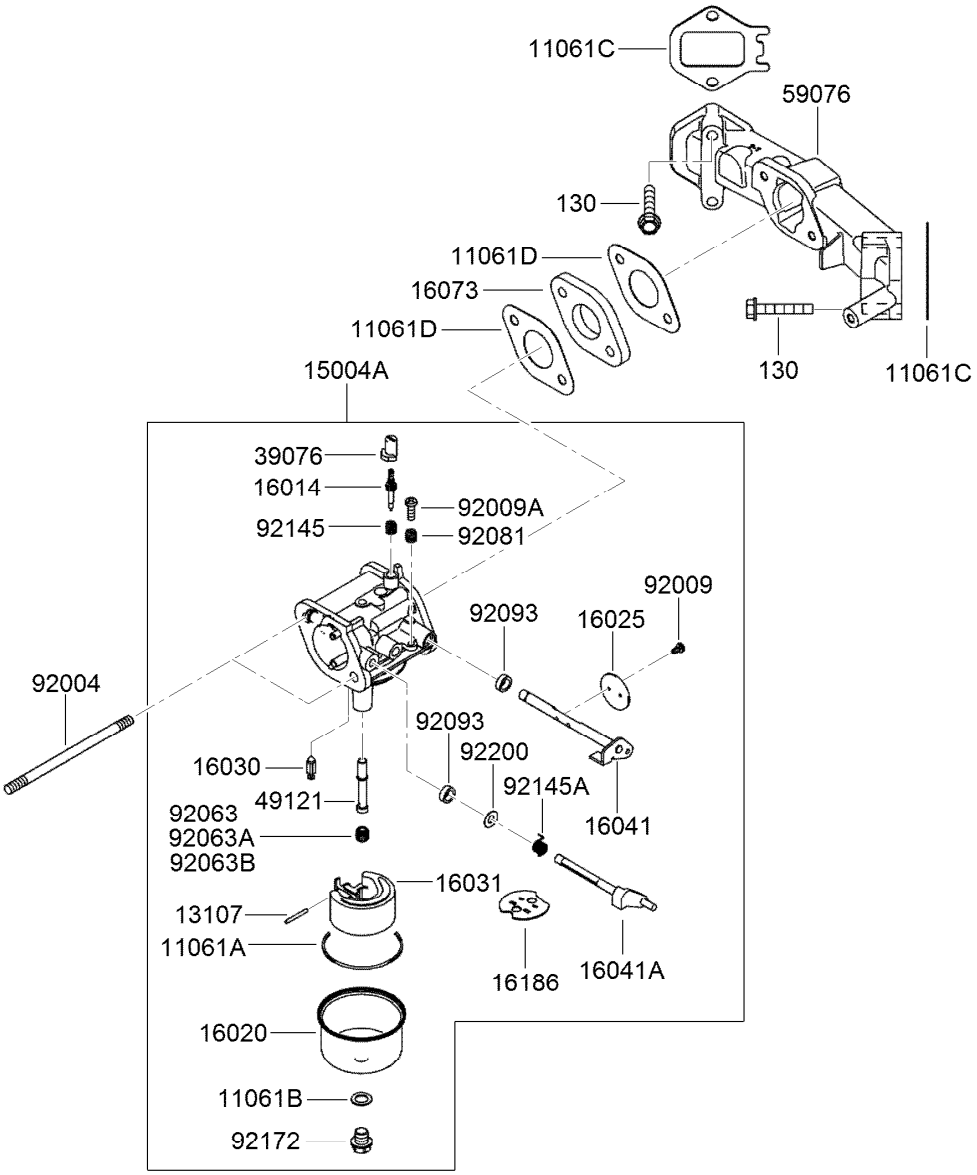

Carburetor Assembly

Ref.	Part Number	Qty.	Description
130	115-6591	4	Bolt-Flanged (6X35)
11061A	115-6425	1	Gasket-Chamber
11061B	108-2580	1	Gasket-Screw
11061C	120-7433	2	Gasket-Manifold
11061D	120-7434	2	Gasket-Insulator
13107	115-6427	1	Shaft
15004A	120-7435	1	Carburetor ASM
16014	120-7436	1	Screw-Air, Pilot
16020	115-6430	1	Chamber-Float
16025	115-6431	2	Valve-Throttle
16030	115-6432	1	Valve-Float
16031	115-6433	1	Float
16041	115-6435	1	Shaft-Throttle, Carburetor
16041A	120-7437	1	Shaft-Carburetor, Choke
16073	115-6594	1	Insulator
16186	120-7438	1	Choke Valve ASM

Ref.	Part Number	Qty.	Description
39076	108-2593	1	Limiter
49121	120-7439	1	Nozzle-Main
59076	120-7440	1	Manifold-Intake
92004	120-7441	2	Stud (6X95)
92009	108-2595	2	Screw
92009A	108-2596	1	Screw
92063	115-6602	1	Jet-Main, No. 100
92063A	120-7442	1	Jet-Main, No. 098 (6560 Ft)
92063B	120-7443	1	Jet-Main, No. 102
92081	108-2598	1	Spring
92093	108-2599	2	Seal
92145	108-2600	1	Spring
92145A	120-7444	1	Spring
92172	108-2601	1	Screw
92200	120-7445	1	Washer (9.8X5.5X1.0)

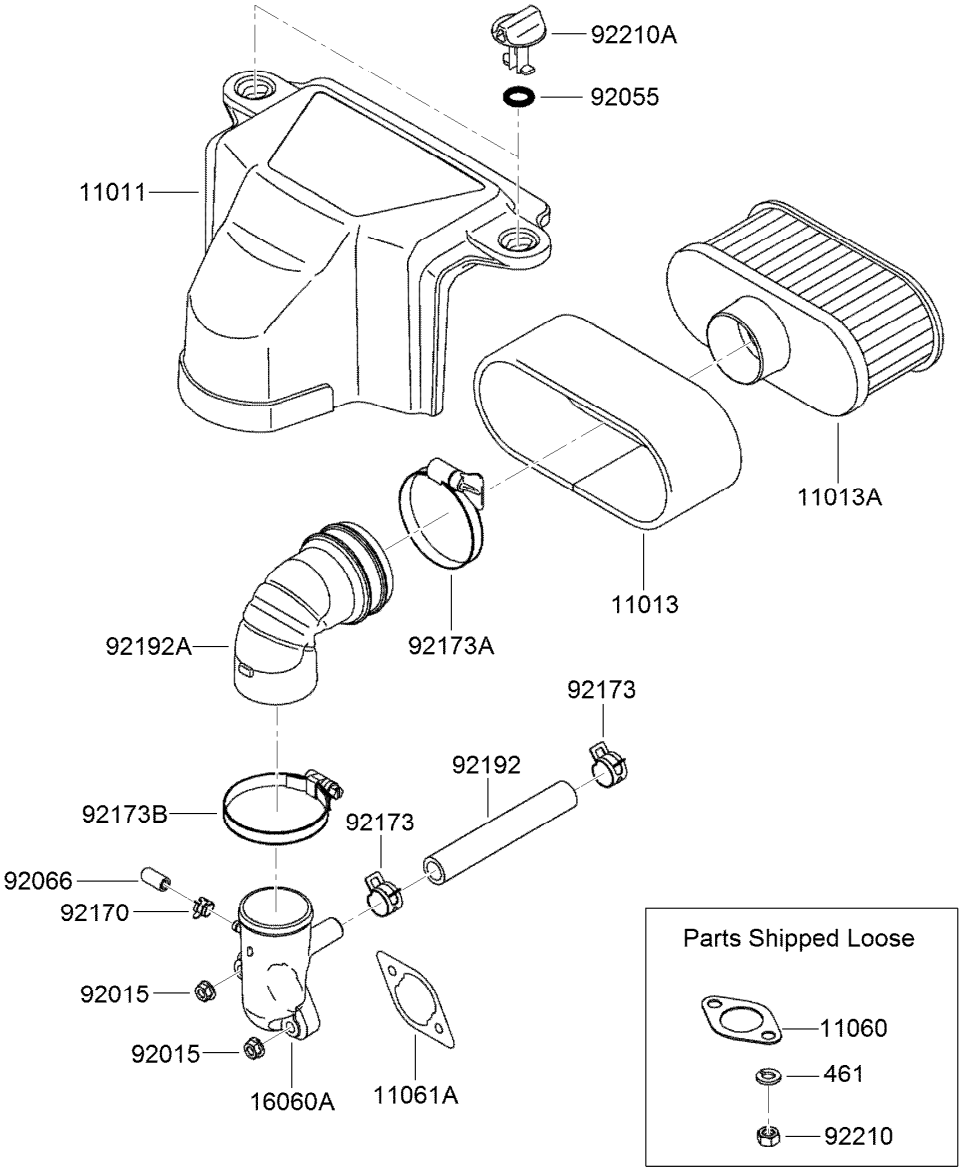

Air Filter and Muffler Assembly

Ref.	Part Number	Qty.	Description
461	119-5962	4	Washer-Spring (8Mm)
11011	120-7477	1	Case-Filter, Air
11013	120-7447	1	Element-Filter, Air
11013A	120-7448	1	Element-Filter, Air
11060	119-5948	2	Gasket-Muffler
11061A	120-7449	1	Gasket-Cleaner, Air
16060A	120-7450	1	Pipe-Intake
92015	119-5954	2	Nut
92055	120-7451	2	O-Ring

Ref.	Part Number	Qty.	Description
92066	120-7452	1	Plug
92170	120-7453	1	Clamp
92173	119-5956	2	Clamp
92173A	120-7454	1	Clamp
92173B	120-7455	1	Clamp
92192	119-5957	1	Tube (12.6X18.6X118)
92192A	120-7456	1	Tube-A/C
92210	119-5959	4	Nut (M8)
92210A	120-7457	2	Nut

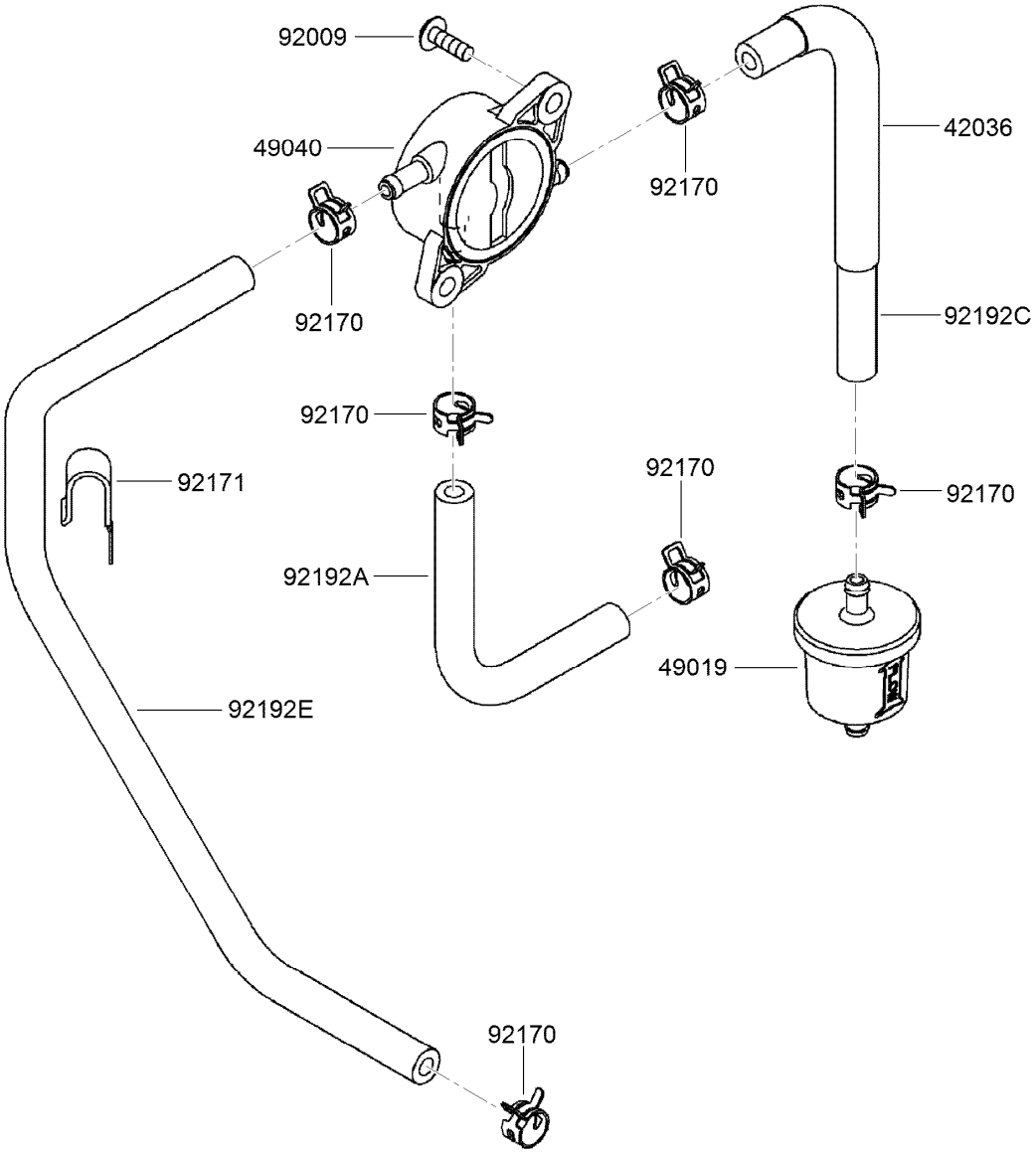

Fuel Pump and Filter Assembly

Ref.	*Part Number*	*Qty.*	*Description*
42036	119-5963	1	Sleeve
49019	121-4570	1	Filter-Fuel
49040	119-5965	1	Pump-Fuel
92009	119-5879	2	Screw
92170	119-5967	6	Clamp
92171	119-5968	1	Clamp
92192A	119-5970	1	Tube (6.4X12.7X150)
92192C	120-7458	1	Tube (6.35X12.7X185)
92192E	120-7459	1	Tube (6.35X12.7X360)

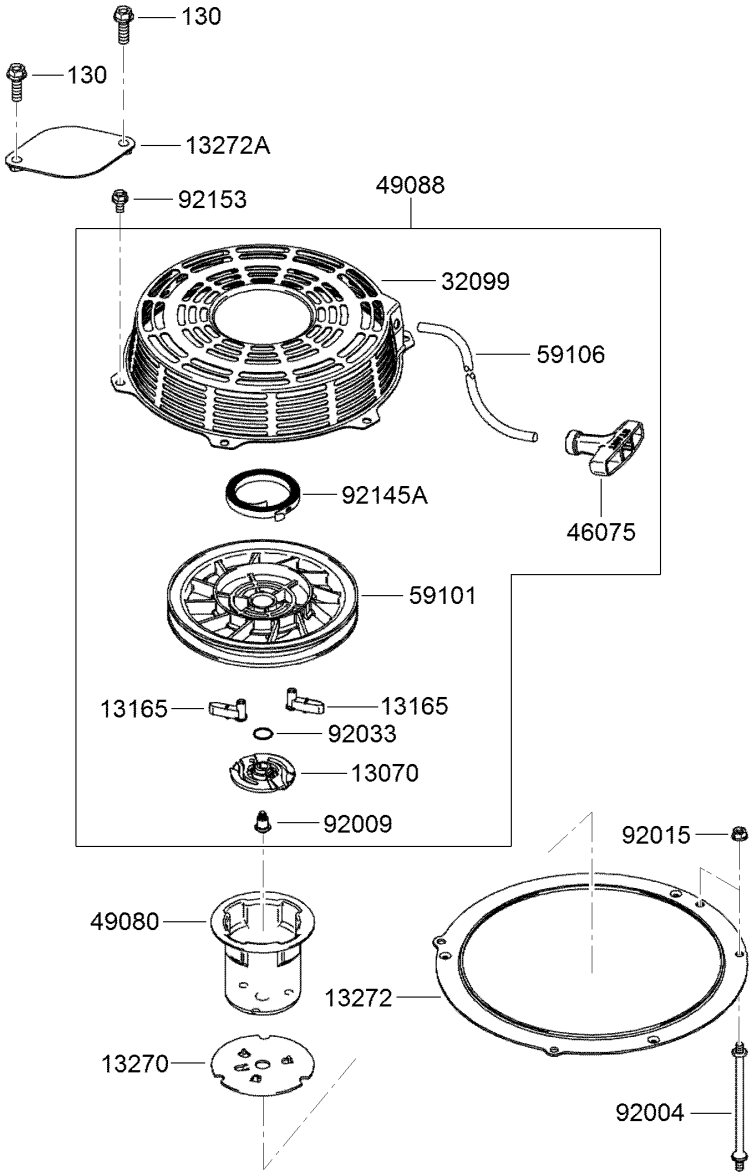

Starter Assembly

Ref.	Part Number	Qty.	Description
130	120-7474	2	Bolt-Flanged (8X25)
13070	120-7460	1	Guide
13165	120-7461	2	Pawl-Starter, Recoil
13270	114-8689	1	Plate
13272	120-7462	1	Plate
13272A	120-7463	1	Plate
32099	120-7464	1	Case-Starter, Recoil
46075	120-7465	1	Grip-Starter, Recoil
49080	120-7466	1	Pulley-Starting

Ref.	Part Number	Qty.	Description
49088	120-7467	1	Starter-Recoil
59101	120-7468	1	Reel-Starter, Recoil
59106	120-7469	1	Rope (5X1500)
92004	120-7470	2	Stud (6X121.3)
92009	120-7471	1	Screw
92015	119-5954	4	Nut
92033	120-7472	1	Ring-Snap
92145A	120-7473	1	Spring
92153	114-8655	3	Bolt (6X12)

56070

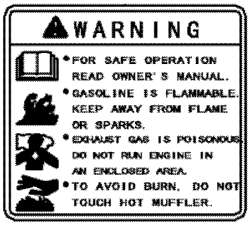

56080

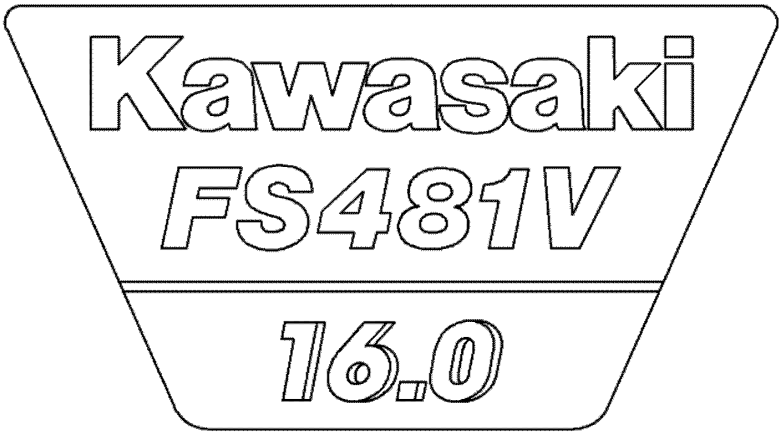

Label Set

Ref.	Part Number	Qty.	Description
56070	108-2625	1	Label-Warning
56080	120-7475	1	Label-Brand

Attachments and Accessories

For 22972 TRX-16 Trencher

Product Name	Model/Part
Crumber Kit	22477
24in X 4in Soil Chain	22480
24in X 4in Combination Chain	22481
24in X 4in Rock Tooth Chain	22482
24in X 6in Soil Chain	22483
24in X 6in Combination Chain	22484
24in X 6in Rock Tooth Chain	22485
36in X 4in Soil Chain	22486
36in X 4in Combination Chain	22487
36in X 4in Rock Tooth Chain	22488
36in X 6in Rock Tooth Chain	22489
36in X 6in Soil Chain	22490
36in X 6in Combination Chain	22491
48in x 4in Soil Chain	22492
48in x 4in Combination Chain	22493
48in x 6in Soil Chain	22494
48in x 6in Combination Chain	22495
24in X 4in Bullet Chain	22496
24in X 6in Bullet Chain	22497
36in X 4in Bullet Chain	22498
36in X 6in Bullet Chain	22499
24in Trencher Boom	22975
36in Trencher Boom	22976
48in Trencher Boom	22977
Bore Drive Attachment	22978
Backfill Blade	22980
Spark Arrestor Screen	94-8157

Notes:

Notes:

TORO®

Count on it.