Form No. 3390-502 Rev A

TORO®

Count on it.

Parts Catalog

# TRX-16 Trencher

**Model No. 22972—Serial No. 315000001 and Up**

**Model No. 22972G—Serial No. 315000001 and Up**

Register at www.Toro.com.
Original Instructions (EN)

CE

*3390-502* A

# Ordering Replacement Parts

To order replacement parts, please supply the part number, the quantity, and the description of each part desired.

**Understanding Reference Numbers**

Each identified part in an illustration has a reference number. The reference number for a part also appears in the parts list, along with other information about the part.

This catalog uses two special reference number formats, one to indicate parts in a service assembly and another to indicate the quantity of a given part in an illustration.

**Service Assembly Reference Numbers**

Parts in service assemblies have reference numbers in the form a:b. The a represents the reference number of the entire service assembly and the b represents a sequential number unique to each part within the service assembly.

For example, a wheel assembly might be identified by reference number 6, the tire by 6:1, the valve by 6:2, and the wheel by 6:3. When you order the assembly identified by reference number 6, you receive all parts identified by reference numbers 6:1,6:2, and 6:3. However, you may also order any part individually. Reference numbers of this type appear in illustration and in parts lists.

**Reference Numbers Indicating Quantity**

In an illustration, if a reference number indicates more than one part, the reference number has the form nX y. The n represents the quantity of the part, the X is the multiplication symbol, and the y represents the reference number.

For example, in an illustration, the reference number 2X 37 means that two of the parts identified by reference number 37 are indicated.

# List of Abbreviations

**AR:** as required

**ASM:** assembly

**BBC:** blade brake control

**BHTF:** button head thread forming

**CARR:** carriage

**CCW:** counter clockwise

**CW:** clockwise

**DEG:** degrees

**DPA:** Dual Point Adjustment

**ECM:** electronic control module

**EXT:** external

**FH:** flat head

**GA:** gauge

**HD:** heavy-duty

**HF:** hex flange

**HH:** hex head

**HHF:** hex head flange

**HHFTF:** hex head flange thread forming

**HJ:** hex jam

**HLH:** hex lag head

**HOC:** height-of-cut

**HP:** high pressure

**HSBH:** hex socket button head

**HSFH:** hex socket flat head

**HSH:** hex socket head

**HWH:** hex washer head

**HWHTF:** hex washer head thread forming

**HYD:** hydraulic

**LH:** left hand

**LP:** low pressure

**LPG:** Liquefied Petroleum Gas

**NI:** nylon insert

**NPTF:** national pipe thread fine

**PFH:** phillips flat head

**PPH:** phillips pan head

**PPHTF:** phillips pan head thread forming

**PRH:** phillips round head

**PTH:** phillips truss head

**PTO:** power-take-off

**RH:** right hand

**ROPS:** roll-over protection system

**RRB:** rear roller brush

**SFH:** slotted fillister head

**SHH:** slotted hex head

**SHWH:** slotted hex washer head

**SPH:** slotted pan head

**SQH:** square head

**SRH:** slotted round head

**STD:** standard

**TAP:** self tapping

**TTH:** torx truss head

# Contents

Main Frame Assembly . . . . . 4
Track and Drive Assembly . . . . . 6
Hydraulic Pump Assembly No. 117-6410 . . . . . 8
Hydraulic Pump Assembly No. 117-6409 . . . . . 9
Hydraulic Motor Assembly No. 104-8470 . . . . . 10
Parking Brake Assembly . . . . . 11
Engine Assembly . . . . . 12
Gear Pump Assembly No. 114-3072 . . . . . 14
Control Assembly . . . . . 15
Trencher Assembly . . . . . 17
Control Tower Assembly . . . . . 18
Hydraulic Control Assembly . . . . . 20
2-Spool Valve Assembly No. 115-4062 . . . . . 21
Oil Cooler Assembly . . . . . 22
Hydraulic Routing Assembly . . . . . 23
Electrical Assembly . . . . . 24
Cylinder and Crankcase Assembly . . . . . 25
Piston and Crankshaft Assembly . . . . . 26
Valve and Camshaft Assembly . . . . . 27
Lubrication Equipment Assembly . . . . . 28
Cooling Equipment Assembly . . . . . 29
Electric Equipment Assembly . . . . . 30
Control Equipment Assembly . . . . . 31
Carburetor Assembly . . . . . 32
Air Filter and Muffler Assembly . . . . . 33
Fuel Pump and Filter Assembly . . . . . 34
Starter Assembly . . . . . 35
Label Set . . . . . 36
Attachments and Accessories . . . . . 37

**© 2015—The Toro® Company**
**8111 Lyndale Avenue South**
**Bloomington, MN 55420**



**Contact us at www.Toro.com.**
**Printed in the USA.**
**All Rights Reserved**

# Main Frame Assembly

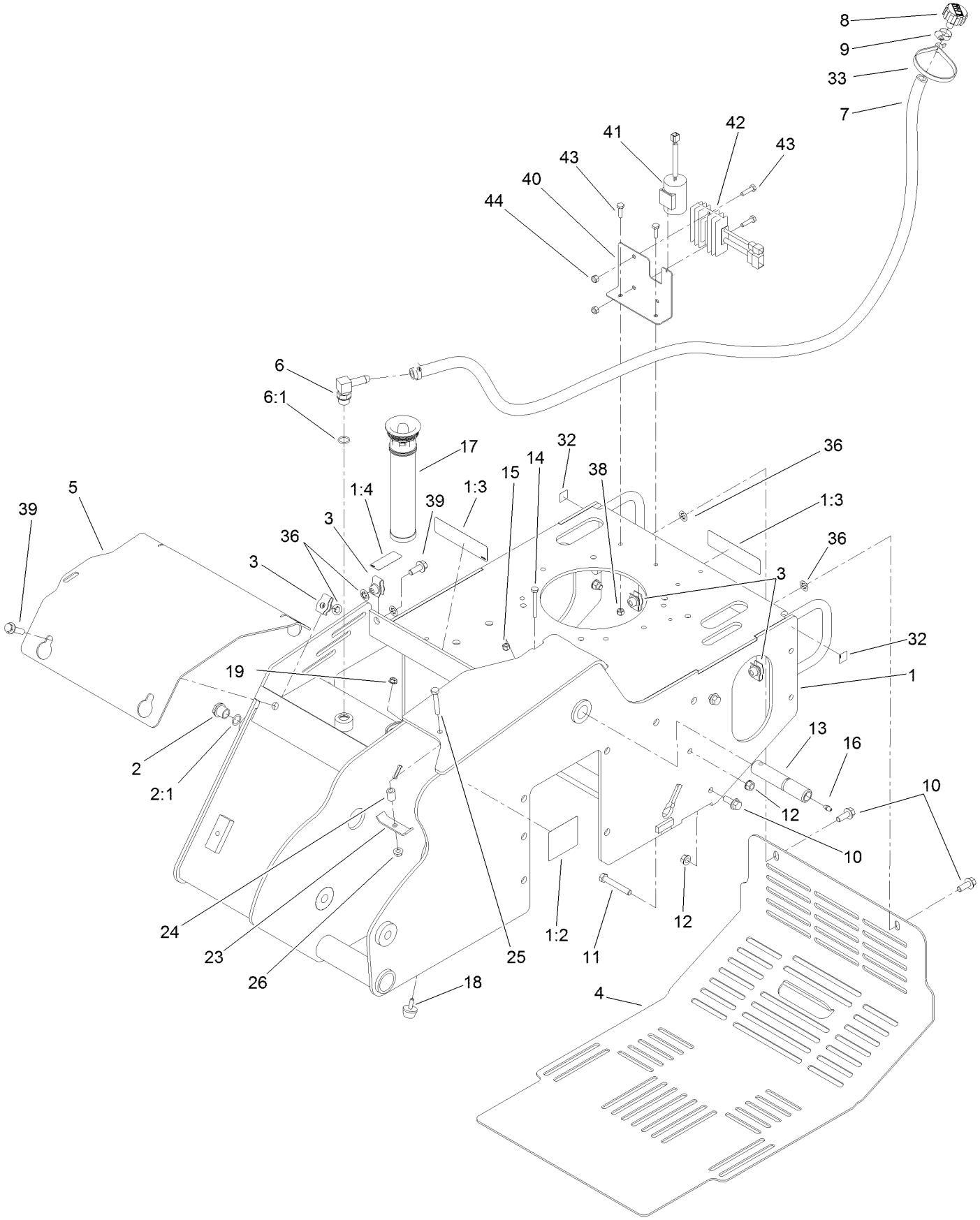

# Main Frame Assembly (continued)

| Ref. | Part Number | Qty. | Description |
|---|---|---|---|
| 1 | 127-9602 | 1 | Main Frame ASM |
| 1:2 | 100-4650 | 1 | Decal-Warning |
| 1:3 | 93-7814 | 2 | Decal-Danger |
| 1:4 | 93-6686 | 1 | Decal-Oil, HYD |
| 2 | 114-3075 | 1 | Sight Glass ASM |
| 2:1 | 237-79 | 1 | O-Ring |
| 3 | 105-4886 | 5 | Nut-Tinnerman |
| 4 | 115-6503-01 | 1 | Cover-Rear |
| 5 | 119-4566-03 | 1 | Plate-Cover, Front |
| 6 | 354-120 | 1 | Fitting-HYD, 90 DEG |
| 6:1 | 237-79 | 1 | O-Ring |
| 7 | 114-3042 | 1 | Hose-Breather |
| 8 | 68-6150 | 1 | Breather |
| 9 | 2412-36 | 2 | Clamp-Hose |
| 10 | 3234-11 | 2 | Screw-HHF |
| 11 | 323-12 | 1 | Screw-HH |
| 12 | 32128-40 | 2 | Nut-Flange |
| 13 | 120-7352 | 1 | Pin-Pivot |
| 14 | 321-18 | 1 | Screw-HH |

| Ref. | Part Number | Qty. | Description |
|---|---|---|---|
| 15 | 3296-42 | 1 | Nut-Lock, NI |
| 16 | 302-5 | 1 | Fitting-Grease |
| 17 | 114-3039 | 1 | In-Tank Filter ASM |
| 18 | 1-523420 | 1 | Bumper |
| 19 | 32128-33 | 1 | Nut-HF |
| 23 | 100-4860 | 1 | Bracket-Clamp |
| 24 | 93-5023 | 1 | Spacer |
| 25 | 322-10 | 1 | Screw-HH |
| 26 | 32128-20 | 1 | Nut-HF |
| 32 | 93-9084 | 2 | Decal-Point, Lift |
| 33 | 3334-945 | 1 | Tie-Cable |
| 36 | 107-3154 | 5 | Nut-Push |
| 38 | 3296-42 | 2 | Nut-Lock, NI |
| 39 | 3234-18 | 3 | Screw-HHF |
| 40 | 117-6399-01 | 1 | Bracket-Electrical |
| 41 | 117-6397 | 1 | Condenser (F/W Engine) |
| 42 | 117-6398 | 1 | Regulator (F/W Engine) |
| 43 | 321-6 | 4 | Screw-HH |
| 44 | 3296-42 | 2 | Nut-Lock, NI |

# Track and Drive Assembly

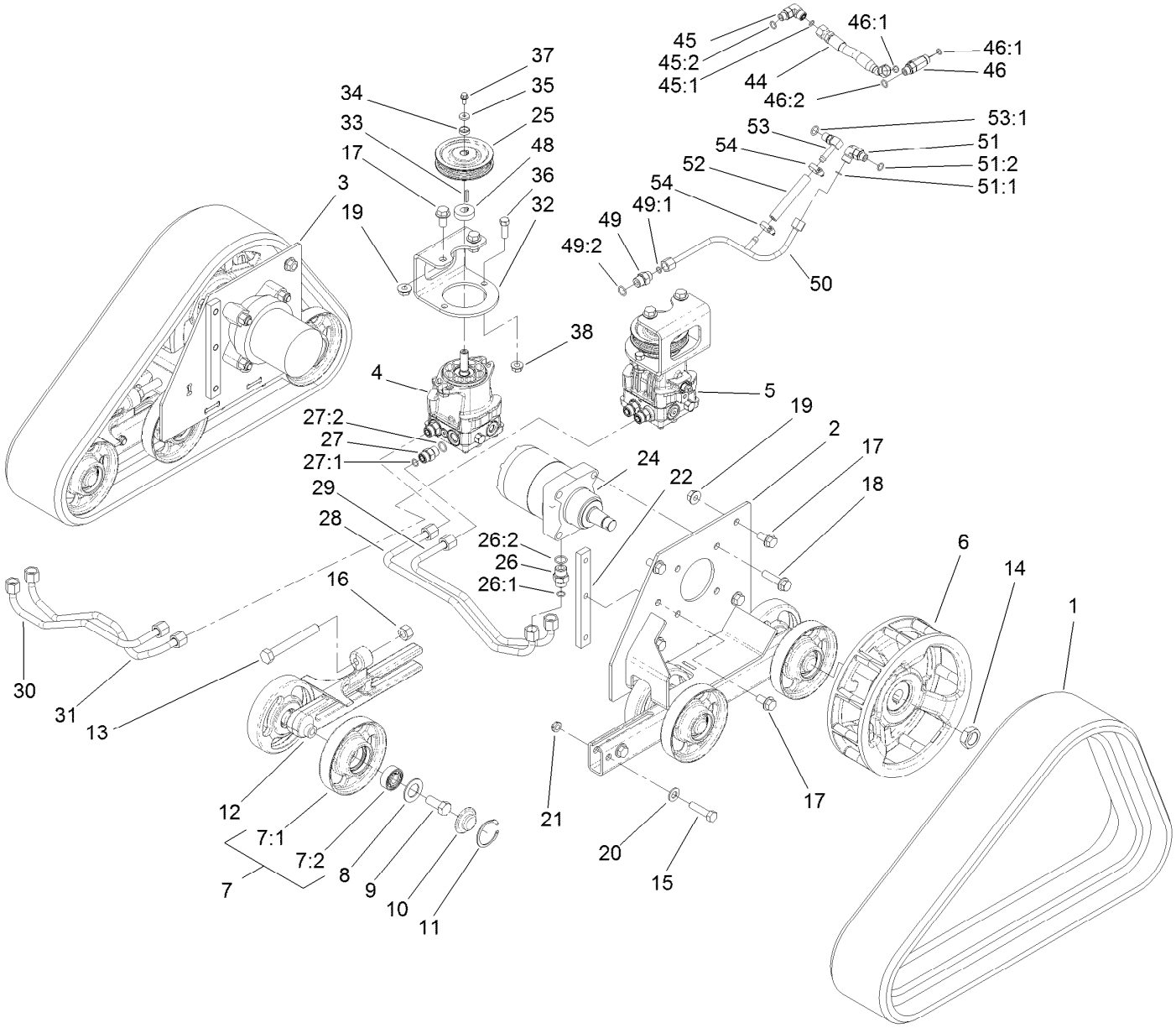

# Track and Drive Assembly (continued)

| Ref. | Part Number | Qty. | Description |
|---|---|---|---|
| 1 | 112-4816 | 2 | Track-Rubber |
| 2 | 114-2992-03 | 1 | Frame-Track, LH |
| 3 | 114-2993-03 | 1 | Frame-Track, RH |
| 4 | 117-6409 | 1 | RH HYD Pump ASM |
| 5 | 117-6410 | 1 | LH HYD Pump ASM |
| 6 | 117-6426-03 | 2 | Wheel-Drive |
| 7 | 112-4817 | 12 | Wheel-Tensioner |
| 7:1 | 114-3014-03 | 1 | Wheel-Track |
| 7:2 | 120-5378 | 1 | Bearing-Ball |
| 8 | 106-7585 | 12 | Gasket-Bogie |
| 9 | 327-4 | 12 | Screw-HH |
| 10 | 106-7557 | 12 | Cap-Wheel, Bearing |
| 11 | 106-7595 | 12 | Ring-Snap, Internal |
| 12 | 114-3077-03 | 2 | Tensioner-Track |
| 13 | 112-4874 | 2 | Screw-HH, TAP |
| 14 | 106-8159 | 2 | Nut-Lock |
| 15 | 325-8 | 4 | Screw-HH |
| 16 | 3217-11 | 2 | Nut-Hex |
| 17 | 3234-6 | 10 | Screw-HHF |
| 18 | 3234-27 | 8 | Screw-HHF |
| 19 | 32128-49 | 8 | Nut-HHF |
| 20 | 3256-26 | 4 | Washer-Flat |
| 21 | 3296-45 | 4 | Nut-Lock, NI |
| 22 | 114-3091 | 2 | Bar-Thread |
| 24 | 104-8470 | 2 | HYD Wheel Motor ASM |
| 25 | 115-1298 | 2 | Sheave |
| 26 | 340-6 | 4 | Fitting-HYD, Straight |
| 26:1 | 237-30 | 1 | O-Ring |
| 26:2 | 237-80 | 1 | O-Ring |
| 27 | 340-4 | 4 | Fitting-HYD, Straight |
| 27:1 | 237-30 | 1 | O-Ring |
| 27:2 | 237-79 | 1 | O-Ring |
| 28 | 115-1285 | 1 | Tube-HYD |
| 29 | 115-1286 | 1 | Tube-HYD |
| 30 | 115-1287 | 1 | Tube-HYD |
| 31 | 115-1288 | 1 | Tube-HYD |
| 32 | 115-1289-03 | 2 | Bracket-Mount, Pump |
| 33 | 80-6090 | 2 | Key-Pump |
| 34 | 108-4211 | 2 | Bushing |
| 35 | 73-3580 | 2 | Washer |
| 36 | 324-5 | 4 | Screw-HH |
| 37 | 33103-016 | 2 | Screw-HHF |
| 38 | 32128-42 | 4 | Nut-HF |
| 44 | 115-1297 | 1 | Hose-HYD |
| 45 | 340-77 | 1 | Fitting-HYD, 90 DEG |
| 45:1 | 237-22 | 1 | O-Ring |
| 45:2 | 237-42 | 1 | O-Ring |
| 46 | 340-86 | 1 | Fitting-Tee |
| 46:1 | 237-22 | 2 | O-Ring |
| 46:2 | 237-42 | 1 | O-Ring |
| 48 | 115-4002 | 2 | Spacer |
| 49 | 340-3 | 1 | Adapter |
| 49:1 | 237-22 | 1 | O-Ring |
| 49:2 | 237-79 | 1 | O-Ring |
| 50 | 117-1305 | 1 | Tube-HYD |
| 51 | 340-77 | 1 | Fitting-HYD, 90 DEG |
| 51:1 | 237-22 | 1 | O-Ring |
| 51:2 | 237-42 | 1 | O-Ring |
| 52 | 115-4083 | 1 | Hose |
| 53 | 100-4887 | 1 | Fitting-Barbed, 90 DEG |
| 53:1 | 237-42 | 1 | O-Ring |
| 54 | 2412-36 | 2 | Clamp-Hose |

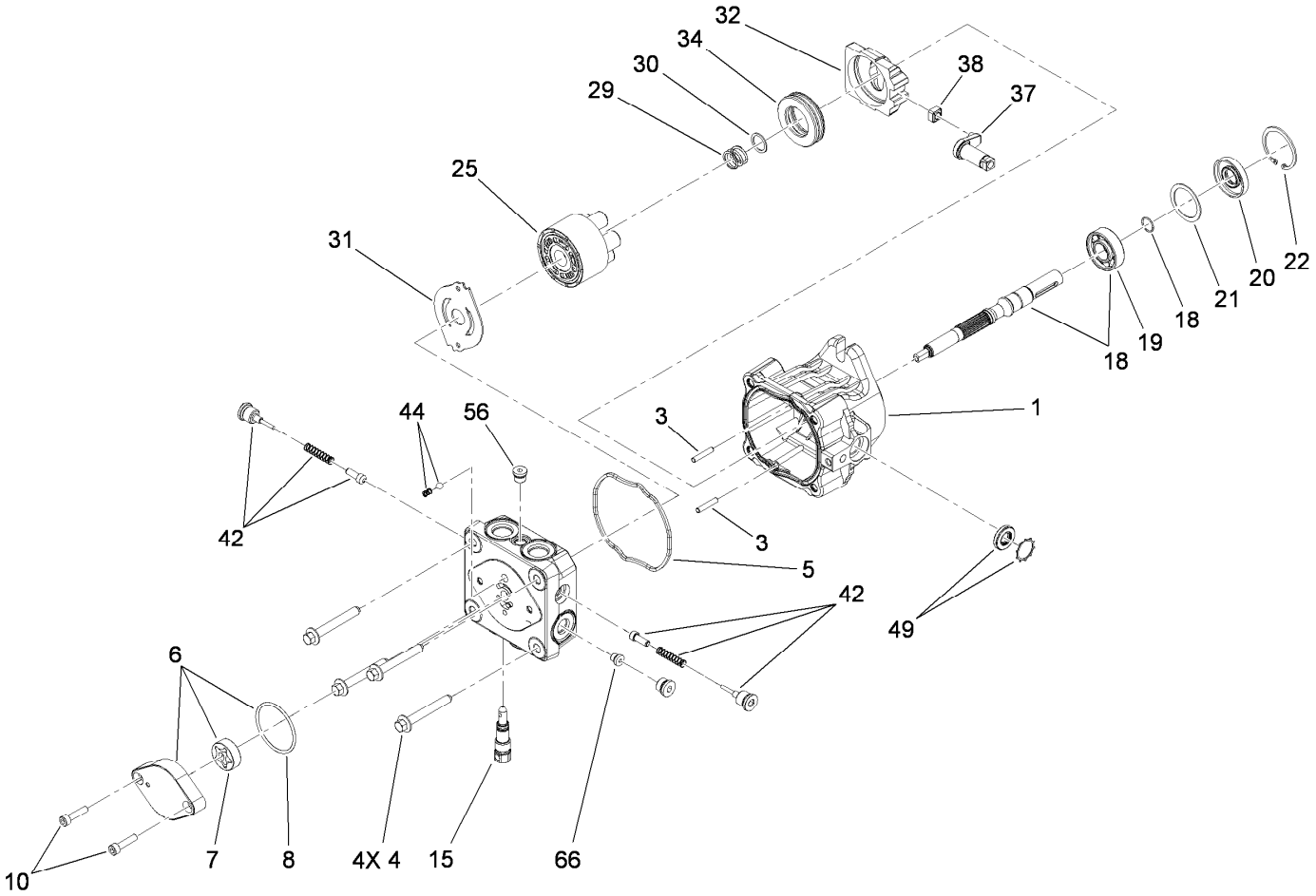


# Hydraulic Pump Assembly No. 117-6410

| Ref. | Part Number | Qty. | Description |
|---|---|---|---|
| 1 | 115-4464 | 1 | Housing Kit |
| 3 | 106-8753 | 2 | Pin-Headless, Straight |
| 4 | 106-8754 | 4 | Bolt-HF |
| 5 | 106-8755 | 1 | O-Ring |
| 6 | 106-8756 | 1 | Charge Pump Kit |
| 7 | 104-2122 | 1 | Gerotor ASM |
| 8 | 106-8757 | 1 | O-Ring |
| 10 | 104-2111 | 2 | Capscrew |
| 15 | 106-8759 | 1 | Bypass Valve Kit |
| 18 | 103-2664 | 1 | Input Shaft Kit |
| 19 | 104-5311 | 1 | Bearing-Ball |
| 20 | 104-5310 | 1 | Seal-Lip |
| 21 | 104-5308 | 1 | Spacer |
| 22 | 104-5309 | 1 | Ring-Retaining |
| 25 | 103-2666 | 1 | Cylinder Block Kit |

| Ref. | Part Number | Qty. | Description |
|---|---|---|---|
| 29 | 94-1936 | 1 | Spring-Block |
| 30 | 94-1937 | 1 | Washer-Thrust |
| 31 | 105-6185 | 1 | Plate-Valve |
| 32 | 94-1907 | 1 | Swashplate-Variable |
| 34 | 94-6922 | 1 | Bearing-Thrust |
| 37 | 115-4458 | 1 | Arm-Trunnion, Tapered Square |
| 38 | 94-1910 | 1 | Guide-Slot |
| 42 | 98-3252 | 2 | Valve-Check (W/Poppet) |
| 44 | 106-8760 | 1 | Charge Relief Valve Kit |
| 49 | 114-8155 | 1 | Trunnion Seal Kit |
| 56 | 106-8762 | 1 | Plug-HSH |
| 66 | 106-8763 | 1 | Plug-HSH |
| 99 | 105-6184 | 1 | Seal Overhaul Kit ● |

● Not illustrated

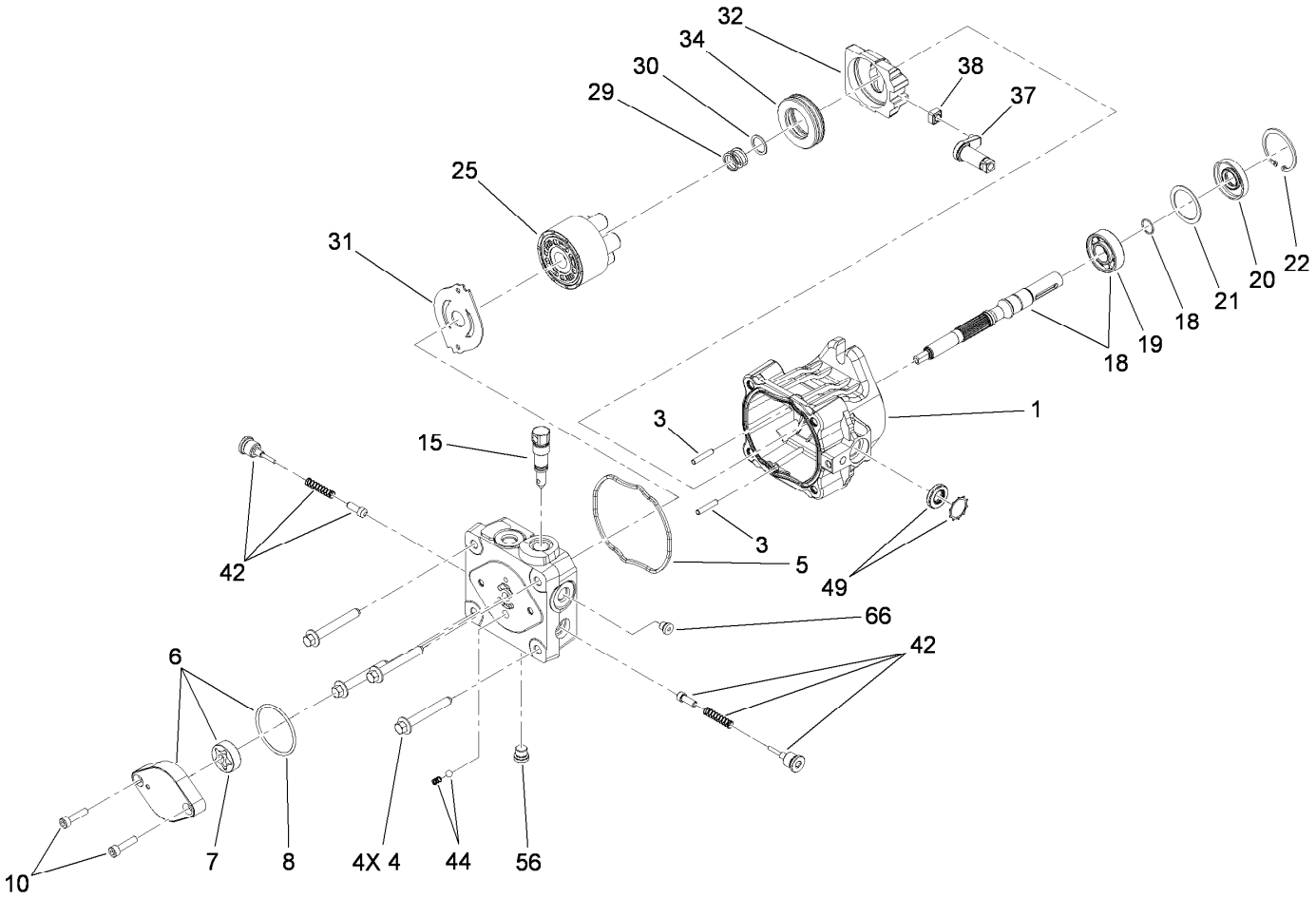


# Hydraulic Pump Assembly No. 117-6409

| Ref. | Part Number | Qty. | Description |
|---|---|---|---|
| 1 | 115-4464 | 1 | Housing Kit |
| 3 | 106-8753 | 2 | Pin-Headless, Straight |
| 4 | 106-8754 | 4 | Bolt-HF |
| 5 | 106-8755 | 1 | O-Ring |
| 6 | 106-8756 | 1 | Charge Pump Kit |
| 7 | 104-2122 | 1 | Gerotor ASM |
| 8 | 106-8757 | 1 | O-Ring |
| 10 | 104-2111 | 2 | Capscrew |
| 15 | 106-8759 | 1 | Bypass Valve Kit |
| 18 | 103-2664 | 1 | Input Shaft Kit |
| 19 | 104-5311 | 1 | Bearing-Ball |
| 20 | 104-5310 | 1 | Seal-Lip |
| 21 | 104-5308 | 1 | Spacer |
| 22 | 104-5309 | 1 | Ring-Retaining |
| 25 | 103-2666 | 1 | Cylinder Block Kit |

| Ref. | Part Number | Qty. | Description |
|---|---|---|---|
| 29 | 94-1936 | 1 | Spring-Block |
| 30 | 94-1937 | 1 | Washer-Thrust |
| 31 | 105-6185 | 1 | Plate-Valve |
| 32 | 94-1907 | 1 | Swashplate-Variable |
| 34 | 94-6922 | 1 | Bearing-Thrust |
| 37 | 115-4458 | 1 | Arm-Trunnion, Tapered Square |
| 38 | 94-1910 | 1 | Guide-Slot |
| 42 | 98-3252 | 2 | Valve-Check (W/Poppet) |
| 44 | 106-8760 | 1 | Charge Relief Valve Kit |
| 49 | 114-8155 | 1 | Trunnion Seal Kit |
| 56 | 106-8762 | 1 | Plug-HSH |
| 66 | 106-8763 | 1 | Plug-HSH |
| 99 | 105-6184 | 1 | Seal Overhaul Kit ● |

● Not illustrated

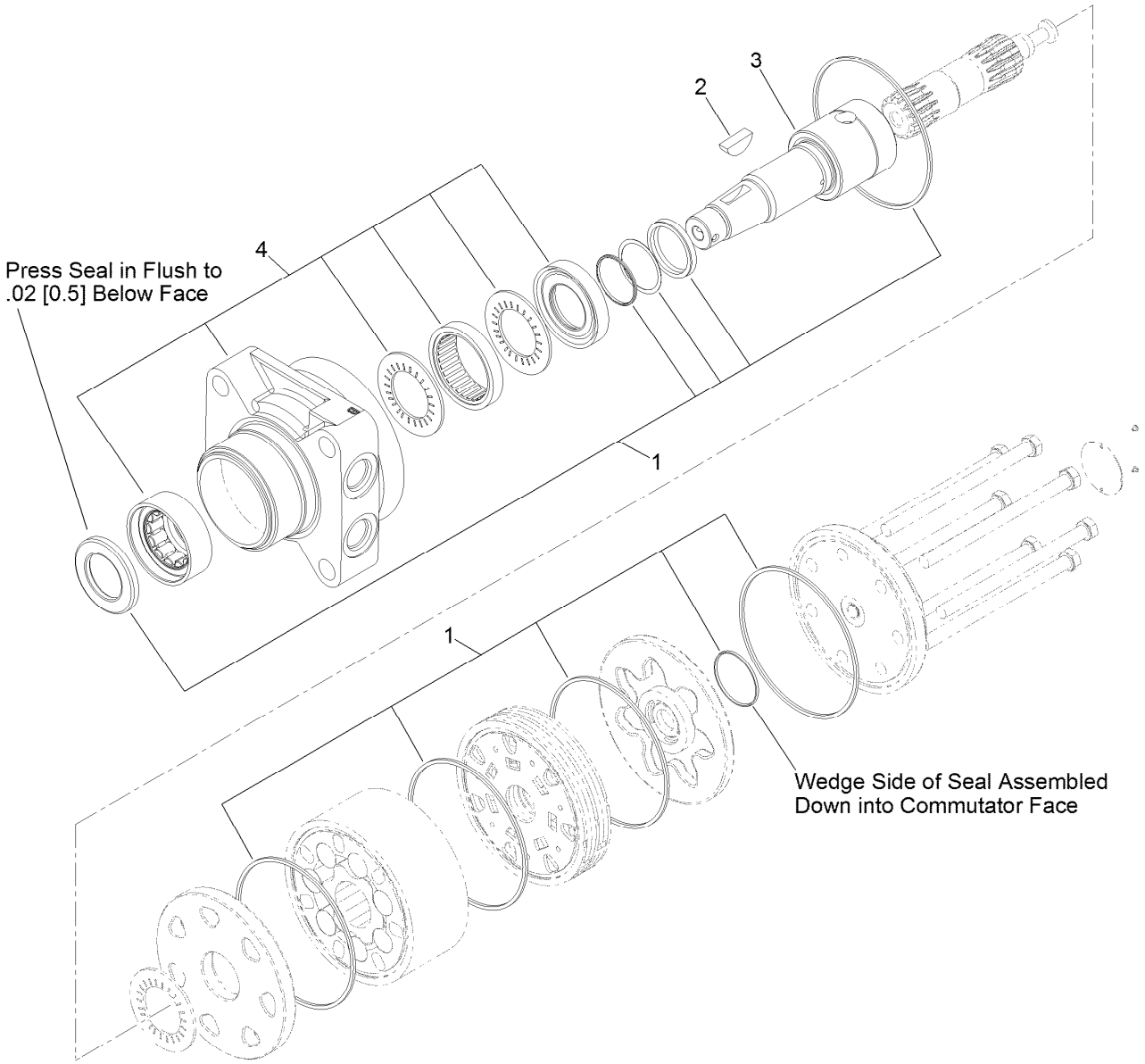


# Hydraulic Motor Assembly No. 104-8470

| *Ref.* | *Part Number* | *Qty.* | *Description* |
|---|---|---|---|
| 1 | 115-4061 | 1 | Seal Kit |
| 2 | 3257-42 | 1 | Key-Woodruff |
| 3 | 99-3090 | 1 | Shaft-Coupling |
| 4 | 120-5395 | 1 | Motor Housing ASM |

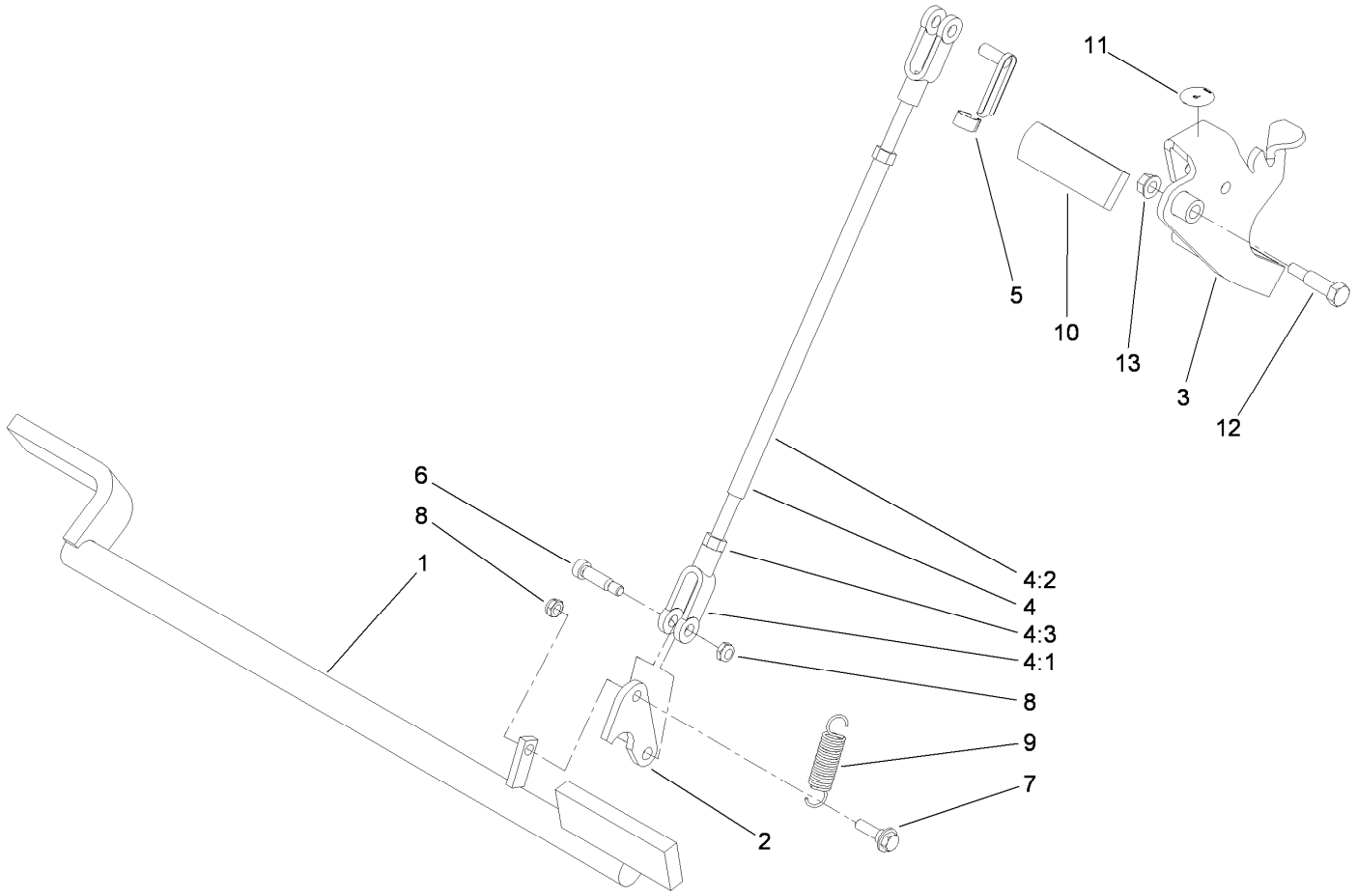


# Parking Brake Assembly

| Ref. | Part Number | Qty. | Description |
|---|---|---|---|
| 1 | 114-2972-03 | 1 | Bar-Brake |
| 2 | 114-2975 | 1 | Link-Mounting |
| 3 | 117-6421-03 | 1 | Handle-Brake |
| 4 | 103-4335 | 1 | Brake Rod ASM |
| 4:1 | 1-633131 | 2 | Yoke-Linkage, Brake |
| 4:2 | 103-3907 | 1 | Linkage-Handle, Brake |
| 4:3 | 3219-3 | 2 | Nut-Hex |
| 5 | 103-2399 | 1 | Pin-Spring, Clevis |

| Ref. | Part Number | Qty. | Description |
|---|---|---|---|
| 6 | 114-8629 | 1 | Bolt-Shoulder |
| 7 | 27-7211 | 1 | Screw-Shoulder |
| 8 | 3296-47 | 2 | Nut-Lock, NI |
| 9 | 67-1450 | 1 | Spring-Idler |
| 10 | 62-9130 | 1 | Grip-Handle |
| 11 | 107-8495 | 1 | Decal-Parking Brake |
| 12 | 7-0030 | 1 | Screw-Shoulder, HH |
| 13 | 32128-20 | 1 | Nut-HF |

# Engine Assembly

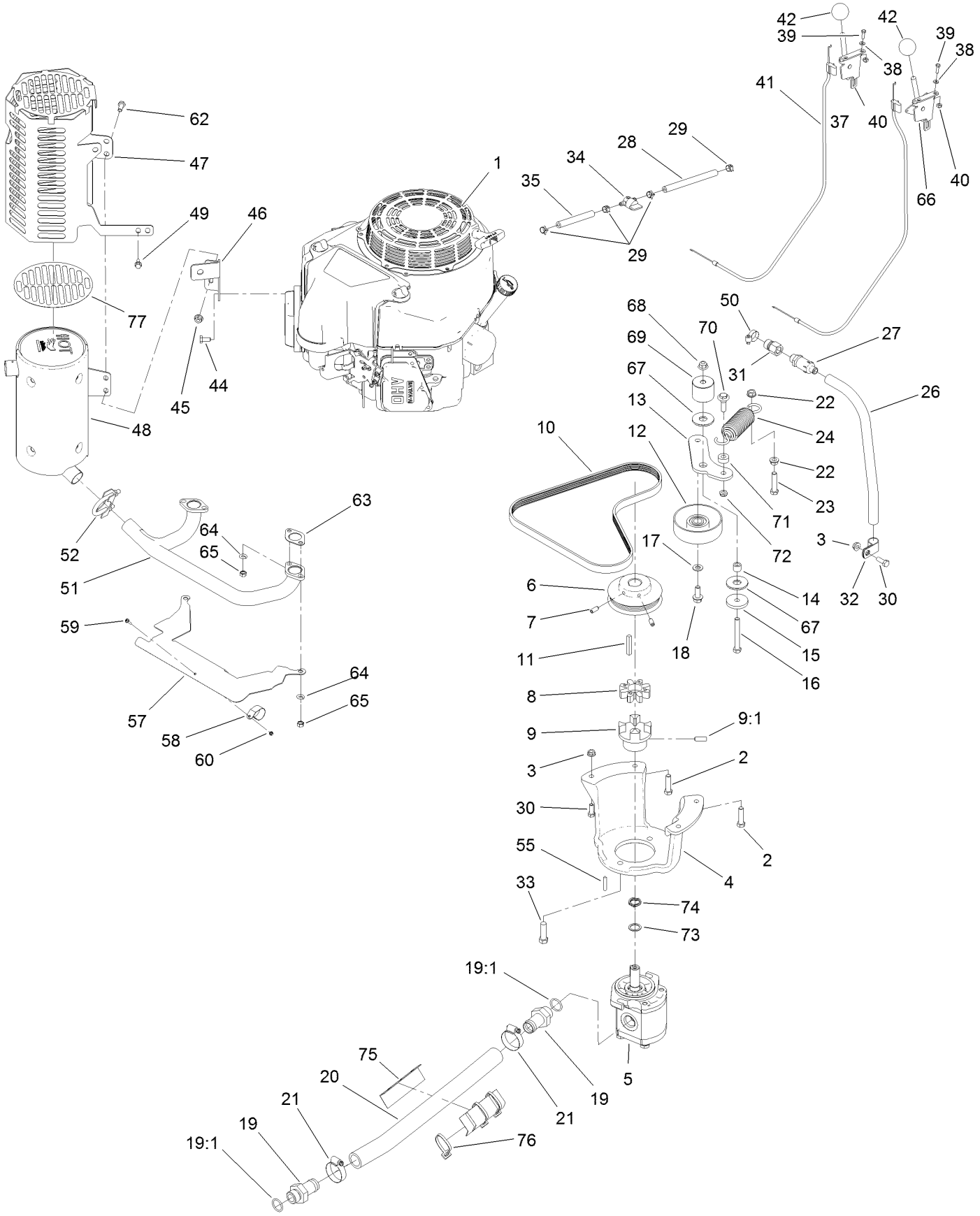

# Engine Assembly (continued)

| Ref. | Part Number | Qty. | Description |
|---|---|---|---|
| 1 | 117-6448 | 1 | Engine-Kawasaki, Fs481V |
| 2 | 323-8 | 4 | Screw-HH |
| 3 | 32128-20 | 3 | Nut-HF |
| 4 | 115-1480-03 | 1 | Mount-Pump |
| 5 | 114-3072 | 1 | Gear Pump ASM |
| 6 | 114-8559-03 | 1 | Pulley-Engine |
| 7 | 3246-6 | 2 | Screw-Set, HSH |
| 8 | 93-8827 | 1 | Spider-Coupler |
| 9 | 114-2933 | 1 | Coupler-Flex |
| 9:1 | 100-7594 | 1 | Screw-Set |
| 10 | 114-2991 | 1 | Belt-V |
| 11 | 608006 | 1 | Key-Square |
| 12 | 95-8802 | 1 | Pulley-Idler |
| 13 | 125-0252 | 1 | Arm-Idler |
| 14 | 1-413088 | 1 | Bushing-Lever, Lift |
| 15 | 110-9981 | 1 | Washer-Plain |
| 16 | 323-14 | 1 | Screw-HH |
| 17 | 3256-24 | 1 | Washer-Flat |
| 18 | 3234-11 | 1 | Screw-HHF |
| 19 | 99-3017 | 2 | Fitting |
| 19:1 | 237-81 | 1 | O-Ring |
| 20 | 114-2917 | 1 | Hose-Suction |
| 21 | 2412-111 | 2 | Clamp |
| 22 | 3290-357 | 2 | Nut-HHF, Whiz |
| 23 | 323-9 | 1 | Screw-HH |
| 24 | 121-4523 | 1 | Spring-Extension |
| 26 | 106-5709 | 1 | Hose-Vent |
| 27 | 92-6877 | 1 | Valve-Drain, Oil |
| 28 | 109-0306 | 1 | Hose-Fuel |
| 29 | 2412-98 | 4 | Clamp-Hose |
| 30 | 322-5 | 3 | Screw-HH |
| 31 | 103-1966 | 1 | Adapter |
| 32 | 2412-81 | 1 | Clamp-R |
| 33 | 324-6 | 2 | Screw-HH |
| 34 | 1-603770 | 1 | Valve-Fuel |
| 35 | 109-0295 | 1 | Hose-Fuel |

| Ref. | Part Number | Qty. | Description |
|---|---|---|---|
| 37 | 108-9730 | 1 | Lever-Control |
| 38 | 3256-21 | 4 | Washer-Flat |
| 39 | 3290-134 | 4 | Screw |
| 40 | 3296-2 | 4 | Nut-Lock, NI |
| 41 | 115-1211 | 2 | Cable-Control |
| 42 | 233-42 | 2 | Knob |
| 44 | 33114-016 | 2 | Screw-HH |
| 45 | 112-2844 | 3 | Nut-HF |
| 46 | 117-6278-03 | 1 | Bracket-Guard, Muffler |
| 47 | 131-0602-03 | 1 | Guard-Muffler |
| 48 | 120-7536 | 1 | Muffler |
| 49 | 33103-016 | 1 | Screw-HHF |
| 50 | 2412-36 | 1 | Clamp-Hose |
| 51 | 120-7537 | 1 | Manifold-Muffler |
| 52 | 2112-11 | 1 | Clamp-Muffler |
| 55 | 27-8590 | 1 | Key-Square |
| 57 | 131-0662 | 1 | Plate-Sheld, Heat |
| 58 | 115-6488 | 1 | Clamp |
| 59 | 115-6494 | 1 | Screw-Pan |
| 60 | 115-6495 | 1 | Nut-Hex |
| 62 | 33114-020 | 3 | Screw-HH |
| 63 | 1-653313 | 2 | Gasket-Exhaust |
| 64 | 115-6496 | 4 | Washer-Spring |
| 65 | 115-6611 | 4 | Nut-Hex |
| 66 | 110-5547 | 1 | Lever-Control |
| 67 | 114-0463 | 2 | Washer-Friction, Composite |
| 68 | 104-8301 | 1 | Nut-Flange, NI |
| 69 | 125-0251 | 1 | Spacer-Idler |
| 70 | 614672 | 1 | Bolt-Shoulder |
| 71 | 104-8426 | 1 | Spacer |
| 72 | 3296-59 | 1 | Nut-Lock, NI |
| 73 | 115-7210 | 1 | Washer-Thrust |
| 74 | 121-4517 | 1 | Washer-Wave |
| 75 | AU112950 | 2 | Protector-Hose, 4 Inch |
| 76 | 3290-378 | 3 | Tie-Cable |
| 77 | 131-0604 | 1 | Foil-Guard |

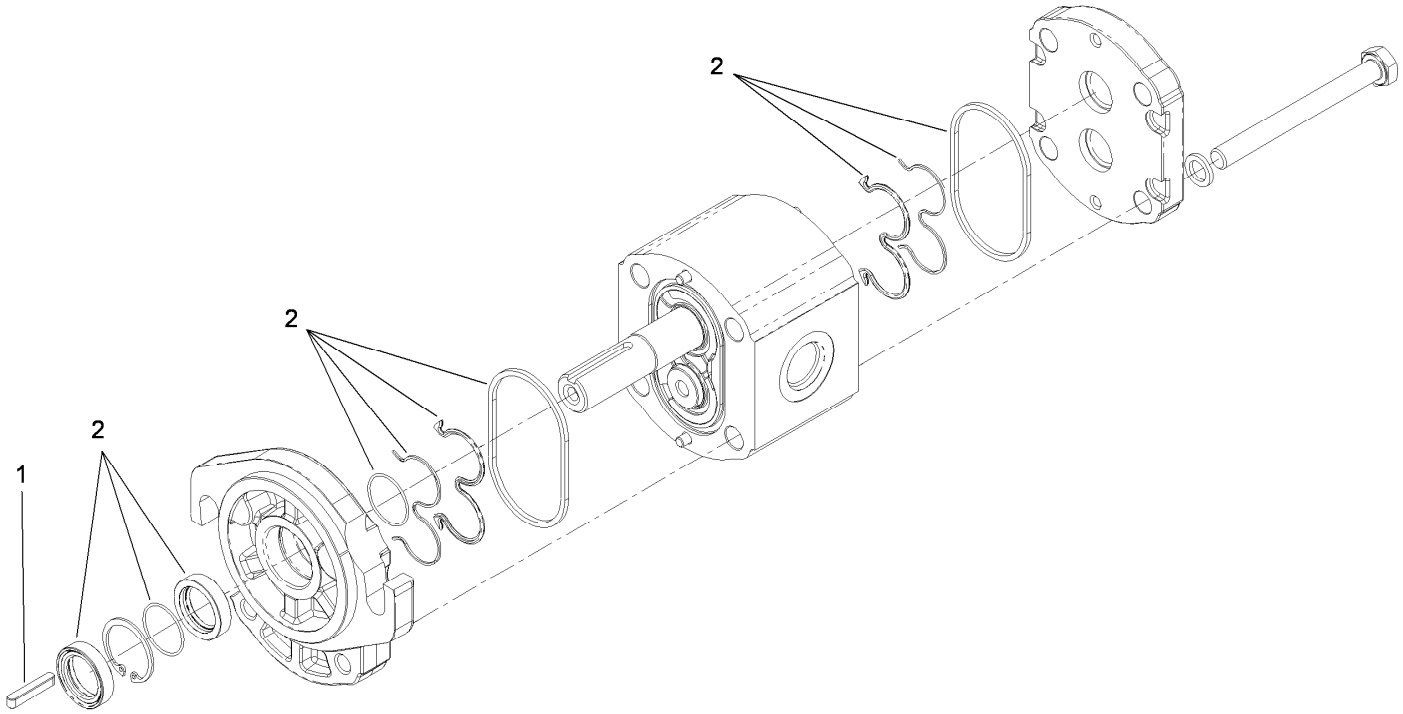


# Gear Pump Assembly No. 114-3072

| *Ref.* | *Part Number* | *Qty.* | *Description* |
|---|---|---|---|
| 1 | 104-5839 | 1 | Key-Square |
| 2 | 115-1265 | 1 | Seal Kit |

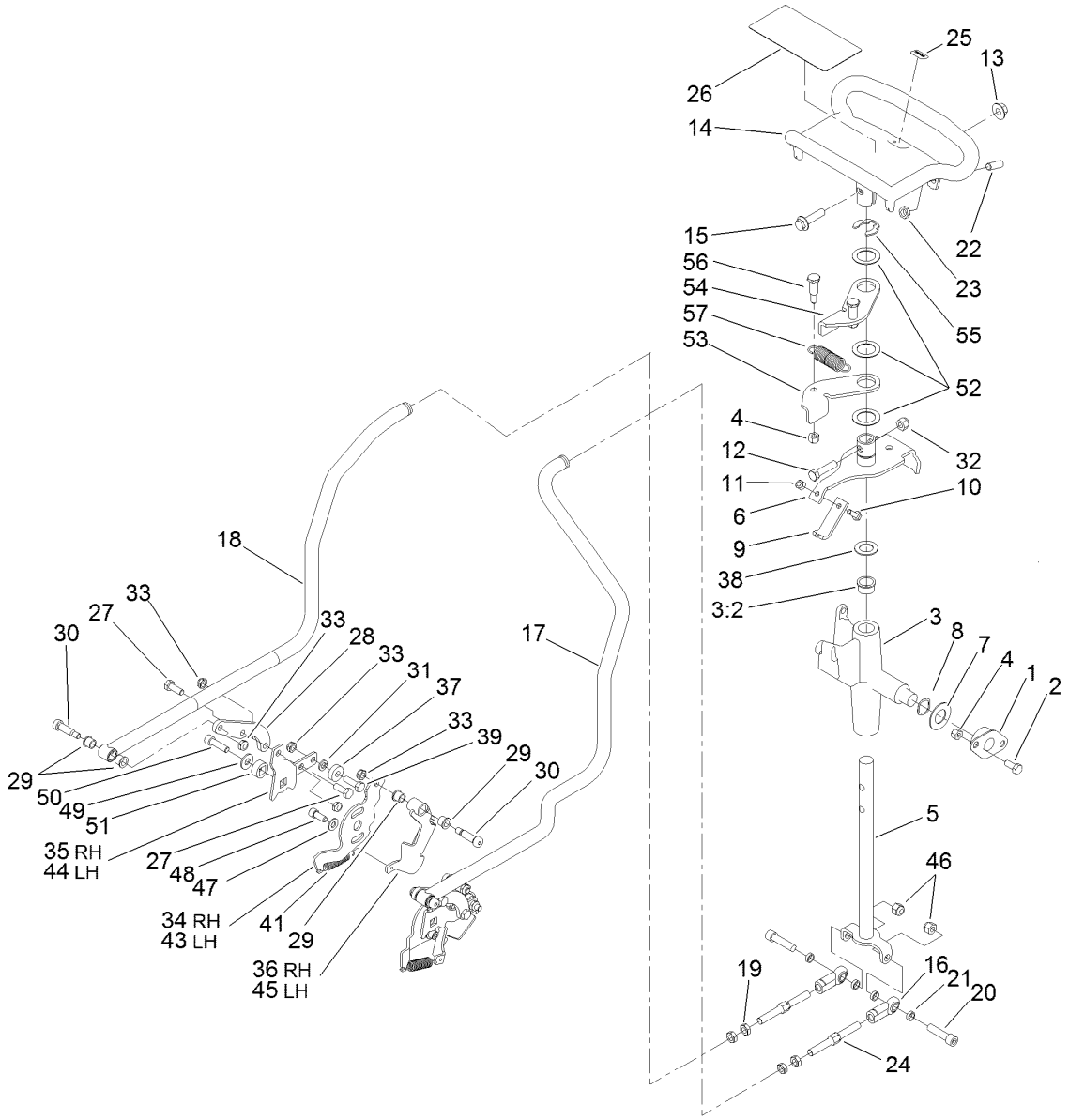


# Control Assembly

| Ref. | Part Number | Qty. | Description |
|---|---|---|---|
| 1 | 27-2320 | 2 | Bearing |
| 2 | 322-3 | 4 | Screw-HH |
| 3 | 106-5737 | 1 | Control Support ASM |
| 3:2 | 256-252 | 2 | Bearing-Flange |
| 4 | 3296-29 | 6 | Nut-Lock, NI |
| 5 | 117-6335 | 1 | Rod-Drive |
| 6 | 112-2783 | 1 | Lever-Pivot |
| 7 | 3256-39 | 2 | Washer-Flat |
| 8 | 95-3703 | 2 | Washer-Spring, Wave |
| 9 | 115-1204 | 1 | Plate-Neutral |
| 10 | 321-4 | 1 | Screw-HH |
| 11 | 3296-42 | 1 | Nut-Lock, NI |
| 12 | 323-8 | 1 | Screw-HH |
| 13 | 32128-43 | 1 | Nut-Flange |
| 14 | 120-5380-03 | 1 | Handle-Control |
| 15 | 3234-18 | 1 | Screw-HHF |
| 16 | 103-1167 | 2 | Joint-Ball End, LH |
| 17 | 121-4508 | 1 | Rod-Control, LH |
| 18 | 121-4509 | 1 | Rod-Control, RH |
| 19 | 3220-3 | 4 | Nut-HJ |
| 20 | 3274-2 | 2 | Screw-HSH |

| Ref. | Part Number | Qty. | Description |
|---|---|---|---|
| 21 | 108-0634 | 4 | Spacer-Plate, Retaining |
| 22 | 3247-6 | 2 | Screw-Set |
| 23 | 3218-3 | 2 | Nut-Jam |
| 24 | 121-4506 | 2 | Link-Control, Adjustment |
| 25 | 98-1459 | 1 | Decal |
| 26 | 115-4020 | 1 | Decal-Traction |
| 27 | 322-4 | 4 | Screw-HH |
| 28 | 115-1290 | 2 | Plate-Adapter, Control, RH |
| 29 | 256-116 | 8 | Bushing-Flange |
| 30 | 114-8629 | 4 | Bolt-Shoulder |
| 31 | 3253-4 | 2 | Washer-Lock |
| 32 | 3296-39 | 1 | Nut-Lock, NI |
| 33 | 3296-47 | 10 | Nut-Lock, NI |
| 34 | 115-6535 | 1 | Plate-Base, RH |
| 35 | 115-6536 | 1 | Plate-Arm, Return |
| 36 | 115-6636 | 1 | Pivot-RH |
| 37 | 251-259 | 2 | Bearing-Ball |
| 38 | 257-8 | 1 | Washer-Thrust |
| 39 | 322-5 | 2 | Screw-HH |
| 41 | 121-4409 | 2 | Spring-Extension |
| 43 | 115-6549 | 1 | Plate-Base, LH |

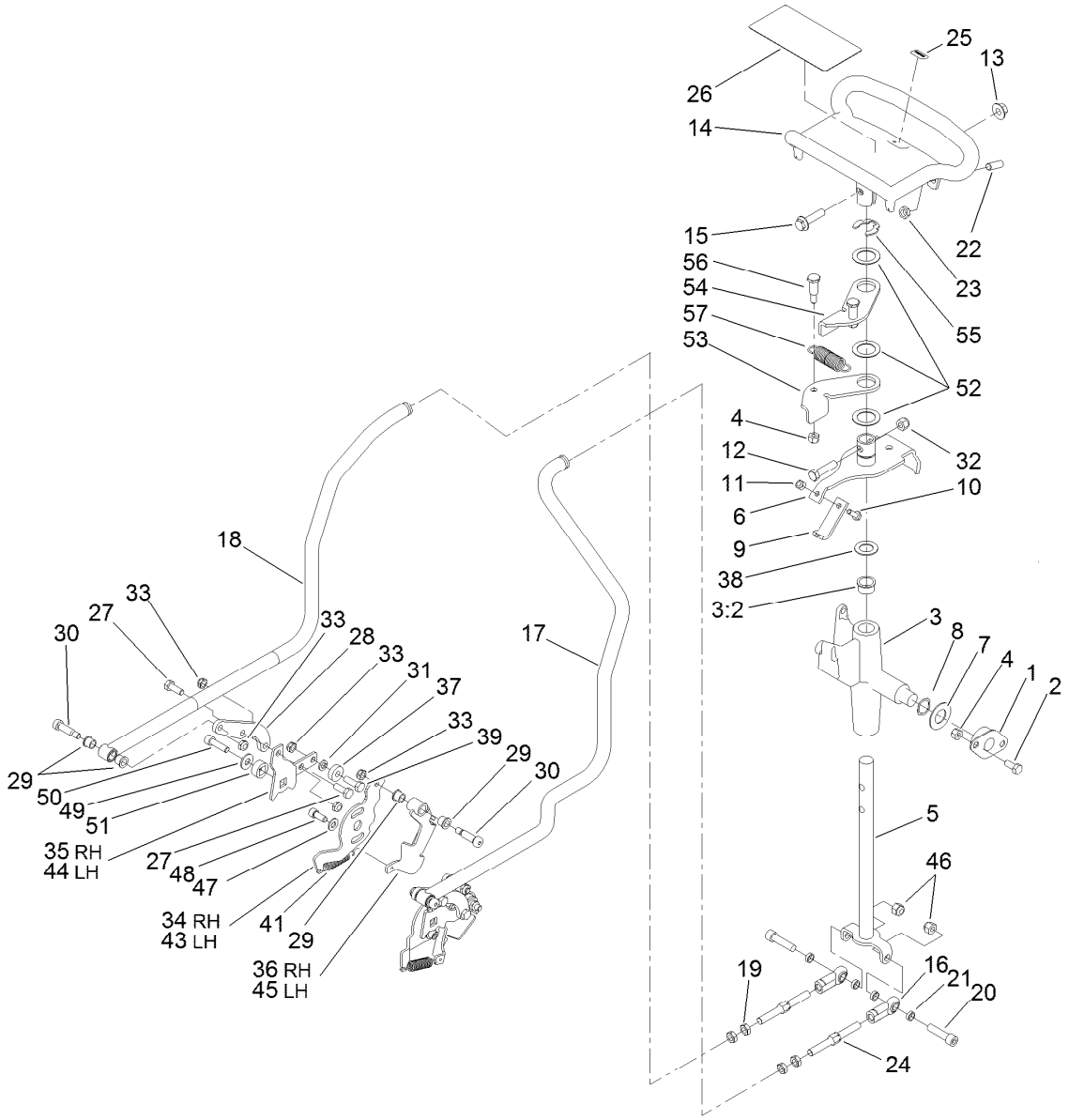


# Control Assembly (continued)

| Ref. | Part Number | Qty. | Description |
|---|---|---|---|
| 44 | 115-6628 | 1 | Plate-Arm, Return, LH |
| 45 | 115-6637 | 1 | Pivot-LH |
| 46 | 3296-39 | 2 | Nut-Lock, NI |
| 47 | 3290-456 | 2 | Washer-Belleville |
| 48 | 3273-14 | 2 | Screw-HSH |
| 49 | 3256-3 | 2 | Washer-Flat |
| 50 | 94-3559 | 2 | Screw-HSH |

| Ref. | Part Number | Qty. | Description |
|---|---|---|---|
| 51 | 117-6429 | 2 | Lock-Trunion |
| 52 | 108-9743 | 3 | Washer-Plain |
| 53 | 98-8407 | 1 | Lever-Return, RH |
| 54 | 98-8408 | 1 | Lever-Return, LH |
| 55 | 32151-91 | 1 | Ring-Retaining |
| 56 | 63-2650 | 2 | Screw-Shoulder |
| 57 | 108-4724 | 1 | Spring-Extension |

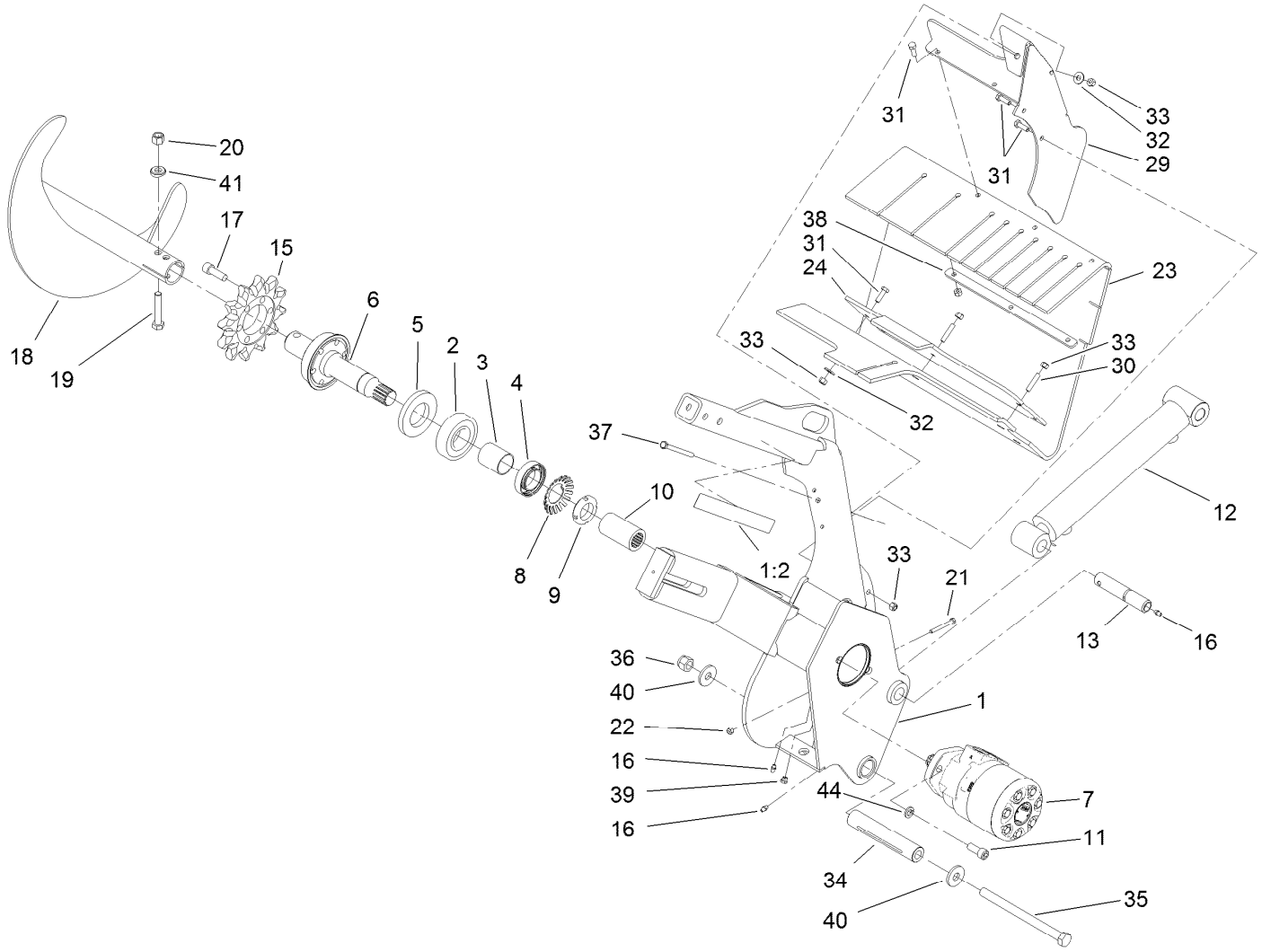


# Trencher Assembly

| Ref. | Part Number | Qty. | Description |
|---|---|---|---|
| 1 | 117-6423 | 1 | Trencher Head ASM |
| 1:2 | 99-9952 | 2 | Decal-Danger |
| 2 | 106-8871 | 1 | Bearing-Ball |
| 3 | 112-4979 | 1 | Spacer |
| 4 | 111199 | 1 | Bearing-Ball |
| 5 | 114-2955 | 1 | Seal-Grease |
| 6 | 117-6308 | 1 | Shaft-Trencher |
| 7 | 131-0652 | 1 | HYD Motor ASM |
| 8 | 114-2956 | 1 | Lockwasher-Bearing |
| 9 | 88-1450 | 1 | Locknut-Bearing |
| 10 | 117-6315 | 1 | Collar-Splined |
| 11 | 3274-4 | 2 | Screw-HSH |
| 12 | 121-1955 | 1 | HYD Cylinder ASM |
| 13 | 120-7352 | 1 | Pin-Pivot |
| 15 | 104-1964 | 1 | Sprocket-Trencher |
| 16 | 302-5 | 3 | Fitting-Grease |
| 17 | 3274-4 | 6 | Screw-HSH |
| 18 | 117-8852-03 | 1 | Auger-Trencher |
| 19 | 325-13 | 1 | Screw-HH |

| Ref. | Part Number | Qty. | Description |
|---|---|---|---|
| 20 | 3296-23 | 1 | Nut-Lock, NI |
| 21 | 321-18 | 1 | Screw-HH |
| 22 | 3296-42 | 1 | Nut-Lock, NI |
| 23 | 117-6317 | 1 | Shield-Dirt |
| 24 | 117-6316-03 | 1 | Bar-Clamp |
| 29 | 115-1279-03 | 1 | Bracket-Shield |
| 30 | 115-4049 | 2 | Screw-HSH |
| 31 | 322-5 | 8 | Screw-HH |
| 32 | 3256-3 | 4 | Washer-Flat |
| 33 | 3296-29 | 11 | Nut-Lock, NI |
| 34 | 121-4571 | 1 | Spacer-Pivot |
| 35 | 117-6327 | 1 | Bolt-HH |
| 36 | 3296-53 | 1 | Nut-Lock, NI |
| 37 | 322-23 | 1 | Screw-HH |
| 38 | 115-4001-03 | 1 | Plate-Strap, Shield |
| 39 | 302-34 | 1 | Fitting-Lube |
| 40 | 104-9216 | 2 | Washer-Hardened |
| 41 | 117-3479 | 2 | Washer-Saddle |
| 44 | 3253-7 | 2 | Washer-Lock |

# Control Tower Assembly

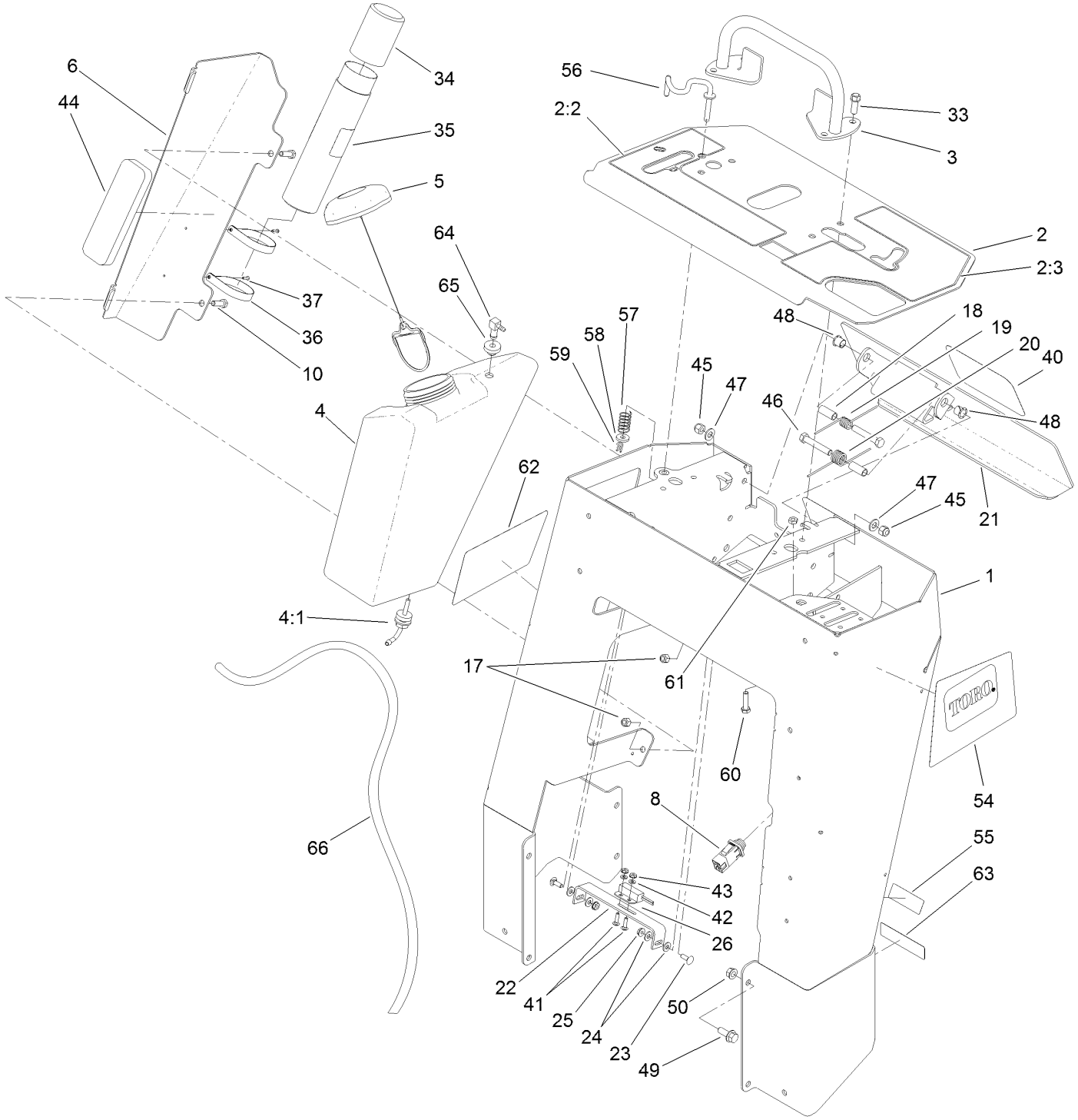

# Control Tower Assembly (continued)

| Ref. | Part Number | Qty. | Description |
|---|---|---|---|
| 1 | 117-6419-01 | 1 | Tower |
| 2 | 117-6389 | 1 | Panel-Control |
| 2:2 | 115-1231 | 1 | Decal-Console, RH |
| 2:3 | 115-1230 | 1 | Decal-Console, LH |
| 3 | 106-7715 | 1 | Bar-Reference |
| 4 | 120-7357 | 1 | Tank-Fuel |
| 4:1 | 103-2605 | 1 | Fitting-Fuel, Bulkhead |
| 5 | 120-5461 | 1 | Cap-Fuel, Ratcheting |
| 6 | 114-3065-01 | 1 | Bracket-Cover, Tank |
| 8 | 100-1268 | 1 | Switch-Plunger |
| 10 | 322-5 | 2 | Screw-HH |
| 17 | 3296-29 | 2 | Nut-Lock, NI |
| 18 | 114-1337 | 2 | Spacer-Spring |
| 19 | 98-8425 | 1 | Spring-Torsion, LH |
| 20 | 98-8424 | 1 | Spring-Torsion, RH |
| 21 | 114-3012-03 | 1 | Plate-Reverse |
| 22 | 100-1263 | 1 | Plate-Switch |
| 23 | 3229-1 | 2 | Bolt-CARR |
| 24 | 3256-22 | 4 | Washer-Flat |
| 25 | 32149-2 | 2 | Nut-Keps |
| 26 | 100-1270 | 1 | Switch-Proximity |
| 33 | 95-1726 | 4 | Screw-Taptite |
| 34 | 104-7048 | 1 | Cap-Housing |
| 35 | 104-7050 | 1 | Tube-Manual |
| 36 | 2412-120 | 2 | Clamp-R |

| Ref. | Part Number | Qty. | Description |
|---|---|---|---|
| 37 | 3269-17 | 2 | Rivet-Pop |
| 40 | 105-1217 | 1 | Decal |
| 41 | 3229-20 | 2 | Screw-CARR |
| 42 | 3256-51 | 2 | Washer-Flat |
| 43 | 32149-7 | 2 | Nut-Keps |
| 44 | 107-7507 | 1 | Pad-Foam |
| 45 | 3296-39 | 2 | Nut-Lock, NI |
| 46 | 323-11 | 2 | Screw-HH |
| 47 | 3256-24 | 2 | Washer-Flat |
| 48 | 256-257 | 2 | Bushing-Nyliner |
| 49 | 3234-11 | 8 | Screw-HHF |
| 50 | 32128-40 | 8 | Nut-Flange |
| 54 | 117-6281 | 1 | Decal-Side, LH |
| 55 | 120-7531 | 1 | Decal-Info |
| 56 | 114-8727 | 1 | Rod-Interlock |
| 57 | 85-6750 | 1 | Spring-Control |
| 58 | 88-7200 | 1 | Washer-Flat |
| 59 | 3290-307 | 1 | Pin-Cotter |
| 60 | 3210-7 | 1 | Screw-HH |
| 61 | 3220-2 | 2 | Nut-Jam |
| 62 | 117-6270 | 1 | Decal-Side, RH |
| 63 | 117-2718 | 1 | Decal-Arrester, Spark |
| 64 | 104-5228 | 1 | Fitting-Elbow, 90 DEG |
| 65 | 46-6560 | 1 | Bushing |
| 66 | 117-6396 | 1 | Hose-Vent, Tank |

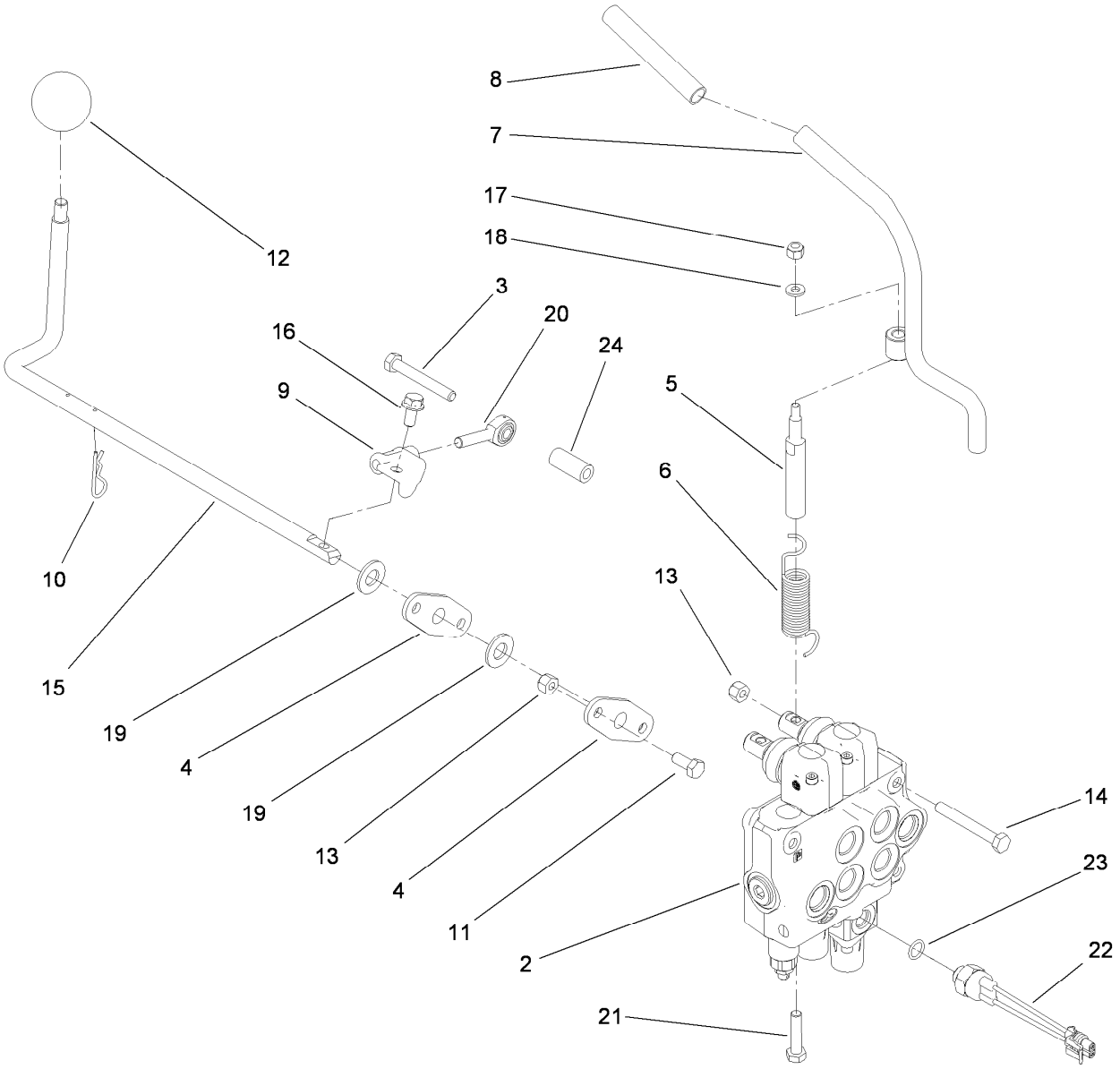


# Hydraulic Control Assembly

| Ref. | Part Number | Qty. | Description |
|---|---|---|---|
| 2 | 115-4062 | 1 | HYD Valve ASM |
| 3 | 33114-060 | 1 | Screw-HH |
| 4 | 20-1620 | 2 | Bearing-Wheel, Friction |
| 5 | 104-2827 | 1 | Spacer-Hiflo |
| 6 | 112-2738 | 1 | Spring-Torsion |
| 7 | 112-2739 | 1 | Lever-Auxiliary |
| 8 | 112-2605 | 1 | Grip-Rubber |
| 9 | 112-7210 | 1 | Bracket-Control |
| 10 | 3290-467 | 2 | Pin-Hair |
| 11 | 322-3 | 4 | Screw-HH |
| 12 | 233-21 | 1 | Knob |
| 13 | 3296-29 | 7 | Nut-Lock, NI |

| Ref. | Part Number | Qty. | Description |
|---|---|---|---|
| 14 | 322-12 | 3 | Screw-HH |
| 15 | 114-8598 | 1 | Rod-Lever, Cylinder |
| 16 | 3234-14 | 1 | Screw-HHF |
| 17 | 3296-42 | 1 | Nut-Lock, NI |
| 18 | 3256-16 | 1 | Washer-Flat |
| 19 | 3256-26 | 2 | Washer-Flat |
| 20 | 115-1273 | 1 | Bearing-Rod End |
| 21 | 48-7740 | 1 | Screw |
| 22 | 72-4310 | 1 | Switch-Ball |
| 23 | 237-42 | 1 | O-Ring |
| 24 | 103-0384 | 1 | Spacer |

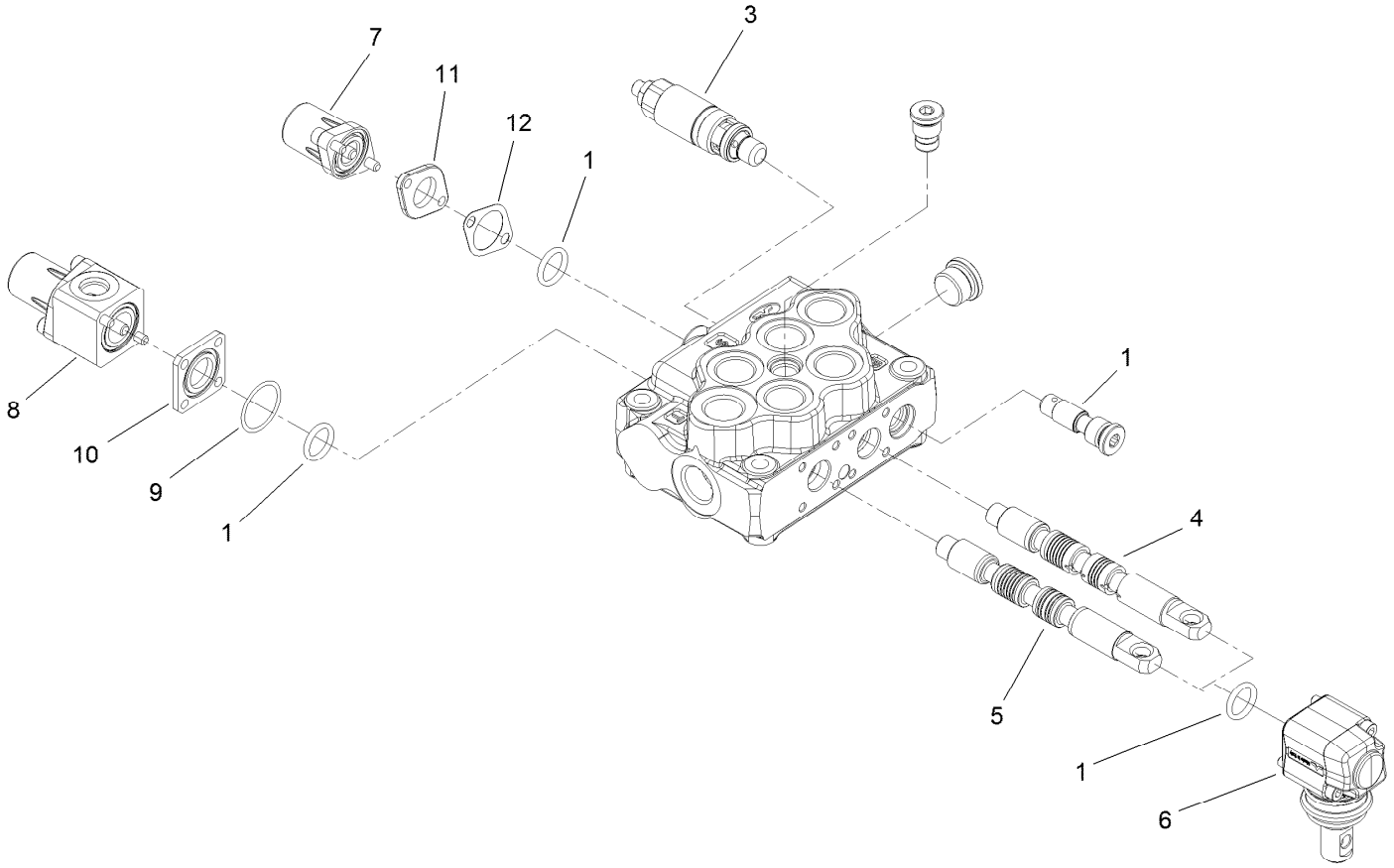


# 2-Spool Valve Assembly No. 115-4062

| *Ref.* | *Part Number* | *Qty.* | *Description* |
|---|---|---|---|
| 1 | 106-7719 | 4 | Seal-Valve |
| 3 | 100-8805 | 1 | Valve-Relief |
| 4 | 115-4084 | 1 | Spool-Valve |
| 5 | 106-7572 | 1 | Spool |
| 6 | 100-7229 | 2 | Lever Kit |
| 7 | 115-4092 | 1 | Spring Return Kit |
| 8 | 115-4093 | 1 | Switch Spring Return Kit |
| 9 | 115-4097 | 1 | Seal-Return |
| 10 | 115-4094 | 1 | Spacer-Square |
| 11 | 115-4089 | 1 | Spacer-Spring Return |
| 12 | 115-4088 | 1 | Gasket-Return |

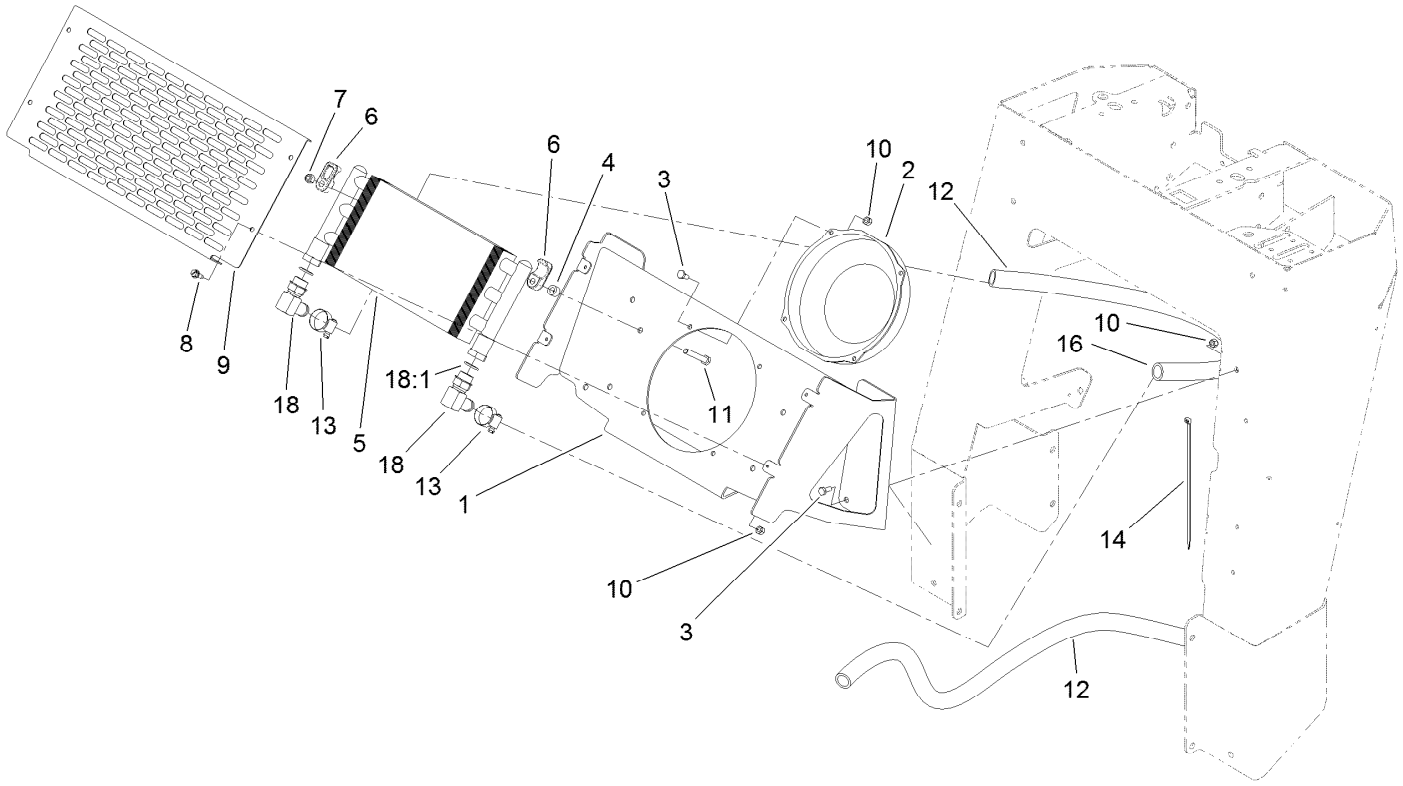


# Oil Cooler Assembly

| Ref. | Part Number | Qty. | Description |
|---|---|---|---|
| 1 | 117-6296-01 | 1 | Mount-Cooler |
| 2 | 104-2809 | 1 | Fan |
| 3 | 321-3 | 12 | Screw-HH |
| 4 | 98-4695 | 4 | Spacer |
| 5 | 105-0352 | 1 | Exchanger-Heat |
| 6 | 131-0733 | 8 | Clamp-Cooler, Oil |
| 7 | 3296-29 | 4 | Nut-Lock, NI |
| 8 | 32104-95 | 4 | Screw-HWH |
| 9 | 119-4633-01 | 1 | Cover-Cooler |

| Ref. | Part Number | Qty. | Description |
|---|---|---|---|
| 10 | 3296-42 | 12 | Nut-Lock, NI |
| 11 | 322-11 | 4 | Screw-HH |
| 12 | 115-1207 | 1 | Hose-Return |
| 13 | 2412-129 | 2 | Clamp-Hose |
| 14 | 3334-945 | 1 | Tie-Cable |
| 16 | 117-3966 | 1 | Hose-Cooler |
| 18 | 87-8170 | 2 | Fitting |
| 18:1 | 237-80 | 1 | O-Ring |

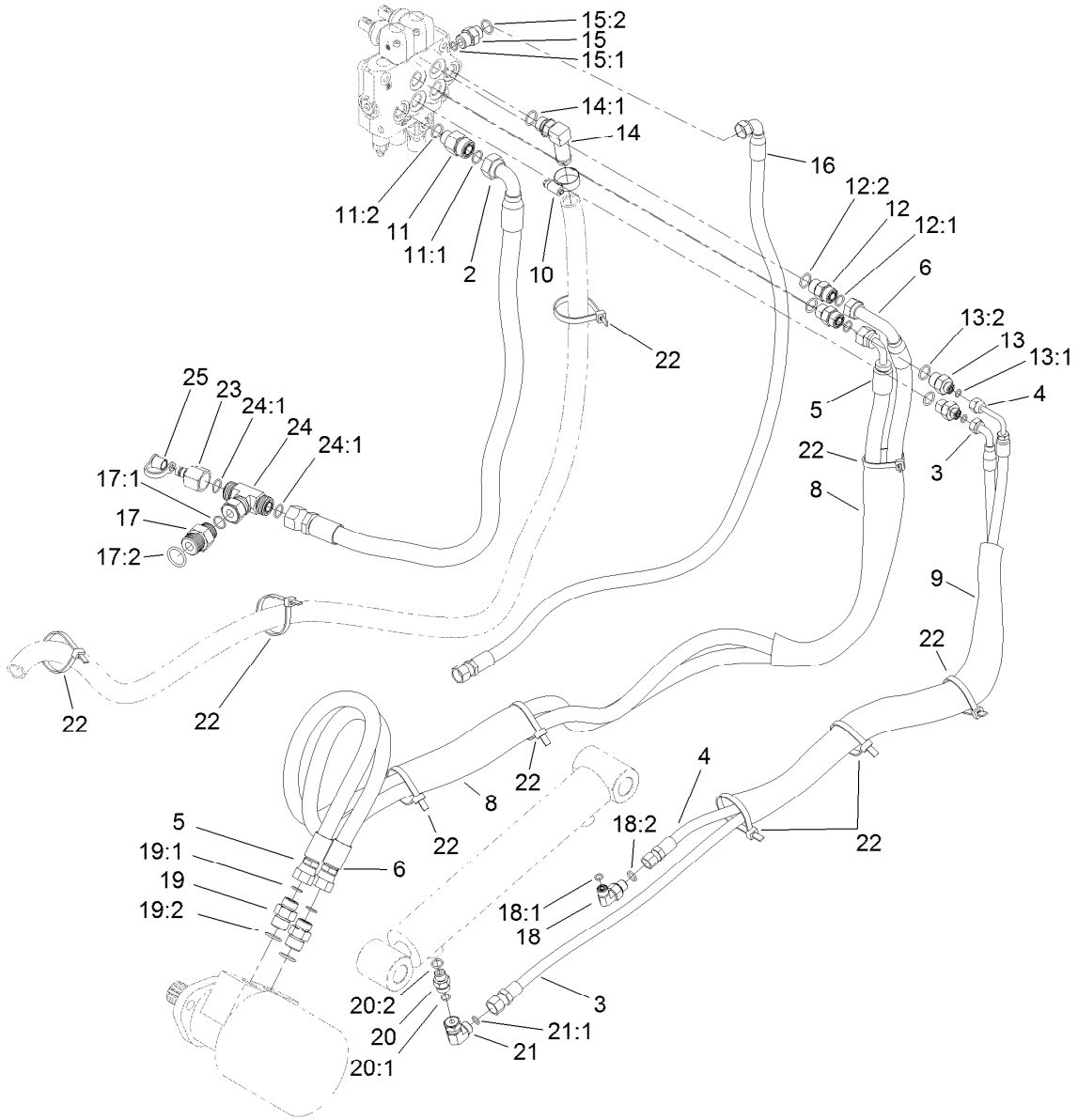


# Hydraulic Routing Assembly

| Ref. | Part Number | Qty. | Description |
|---|---|---|---|
| 2 | 114-3043 | 1 | Hose-HYD |
| 3 | 114-3044 | 1 | Hose-HYD |
| 4 | 114-3045 | 1 | Hose-HYD |
| 5 | 114-3046 | 1 | Hose-HYD |
| 6 | 114-3085 | 1 | Hose-HYD |
| 8 | 99-5648 | 2 | Sleeve-Protective |
| 9 | 115-4064 | 1 | Sleeve-Protective |
| 10 | 2412-129 | 2 | Clamp-Hose |
| 11 | 340-155 | 1 | Fitting-HYD, Straight |
| 11:1 | 237-79 | 1 | O-Ring |
| 11:2 | 237-151 | 1 | O-Ring |
| 12 | 340-4 | 2 | Fitting-HYD, Straight |
| 12:1 | 237-30 | 1 | O-Ring |
| 12:2 | 237-79 | 1 | O-Ring |
| 13 | 340-133 | 2 | Adapter ASM |
| 13:1 | 237-79 | 1 | O-Ring |
| 13:2 | 237-21 | 1 | O-Ring |
| 14 | 353-954 | 1 | Adapter |
| 14:1 | 237-79 | 1 | O-Ring |
| 15 | 340-3 | 1 | Adapter |
| 15:1 | 237-22 | 1 | O-Ring |

| Ref. | Part Number | Qty. | Description |
|---|---|---|---|
| 15:2 | 237-79 | 1 | O-Ring |
| 16 | 117-4038 | 1 | Hose ASM |
| 17 | 340-8 | 1 | Adapter |
| 17:1 | 237-65 | 1 | O-Ring |
| 17:2 | 237-81 | 1 | O-Ring |
| 18 | 340-82 | 1 | Fitting-HYD, 90 |
| 18:1 | 237-42 | 1 | O-Ring |
| 18:2 | 237-21 | 1 | O-Ring |
| 19 | 340-6 | 2 | Fitting-HYD, Straight |
| 19:1 | 237-30 | 1 | O-Ring |
| 19:2 | 237-80 | 1 | O-Ring |
| 20 | 115-4081 | 1 | Valve-Check |
| 20:1 | 237-42 | 1 | O-Ring |
| 20:2 | 237-22 | 1 | O-Ring |
| 21 | 340-159 | 1 | Fitting-HYD, 90 DEG |
| 21:1 | 237-22 | 2 | O-Ring |
| 22 | 3334-945 | 9 | Tie-Cable |
| 23 | 86-5860 | 1 | Nipple |
| 24 | 340-167 | 1 | Fitting-HYD, Tee |
| 24:1 | 237-65 | 2 | O-Ring |
| 25 | 354-79 | 1 | Cap-Dust |

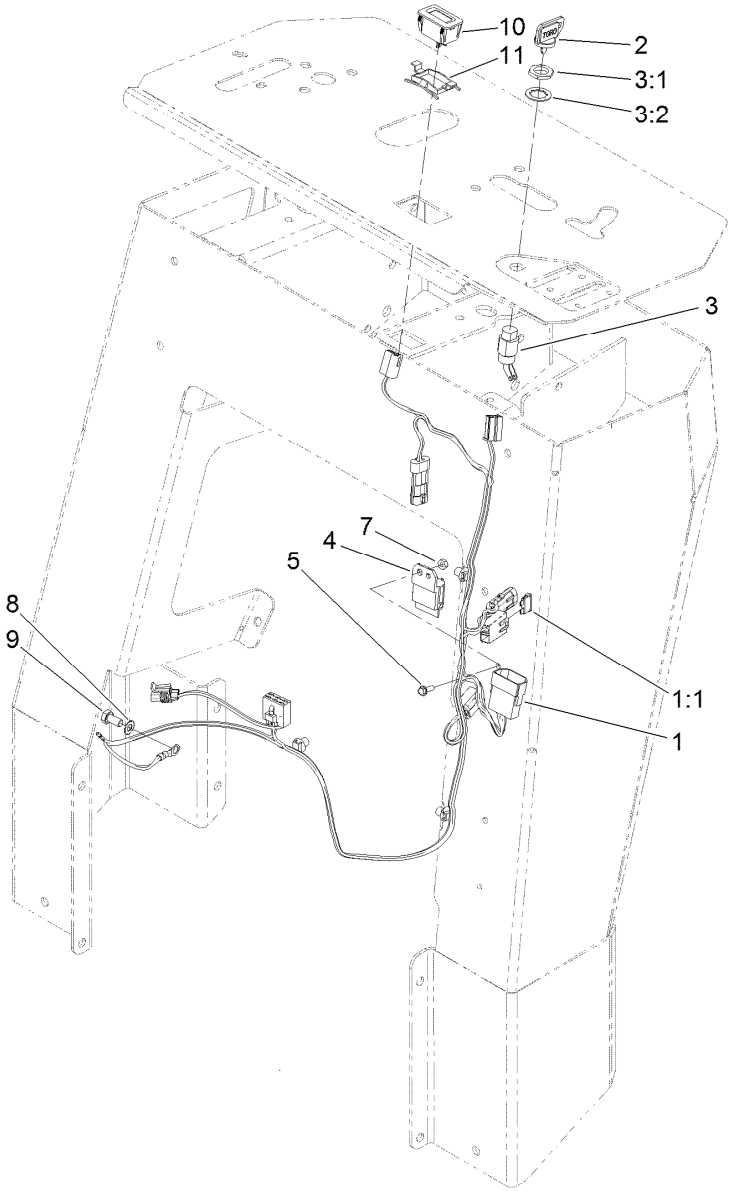


# Electrical Assembly

| Ref. | Part Number | Qty. | Description |
|---|---|---|---|
| 1 | 117-6287 | 1 | Harness-Wire |
| 1:1 | 109355 | 1 | Fuse-Blade, 15 Amp |
| 2 | 63-8360 | 1 | Key-Ignition |
| 3 | 29-5560 | 1 | Switch-On / Off |
| 3:1 | 218-461 | 1 | Nut-HH |
| 3:2 | 3254-5 | 1 | Washer-Tooth, Internal |
| 4 | 1-323430 | 1 | Module-Interlock |
| 5 | 32105-23 | 1 | Screw |
| 7 | 3296-2 | 1 | Nut-Lock, NI |
| 8 | 3255-8 | 2 | Washer-Lock |
| 9 | 33114-016 | 1 | Screw-HH |
| 10 | 120-2244 | 1 | Hourmeter |
| 11 | 104-4234 | 1 | Clip-Mounting |

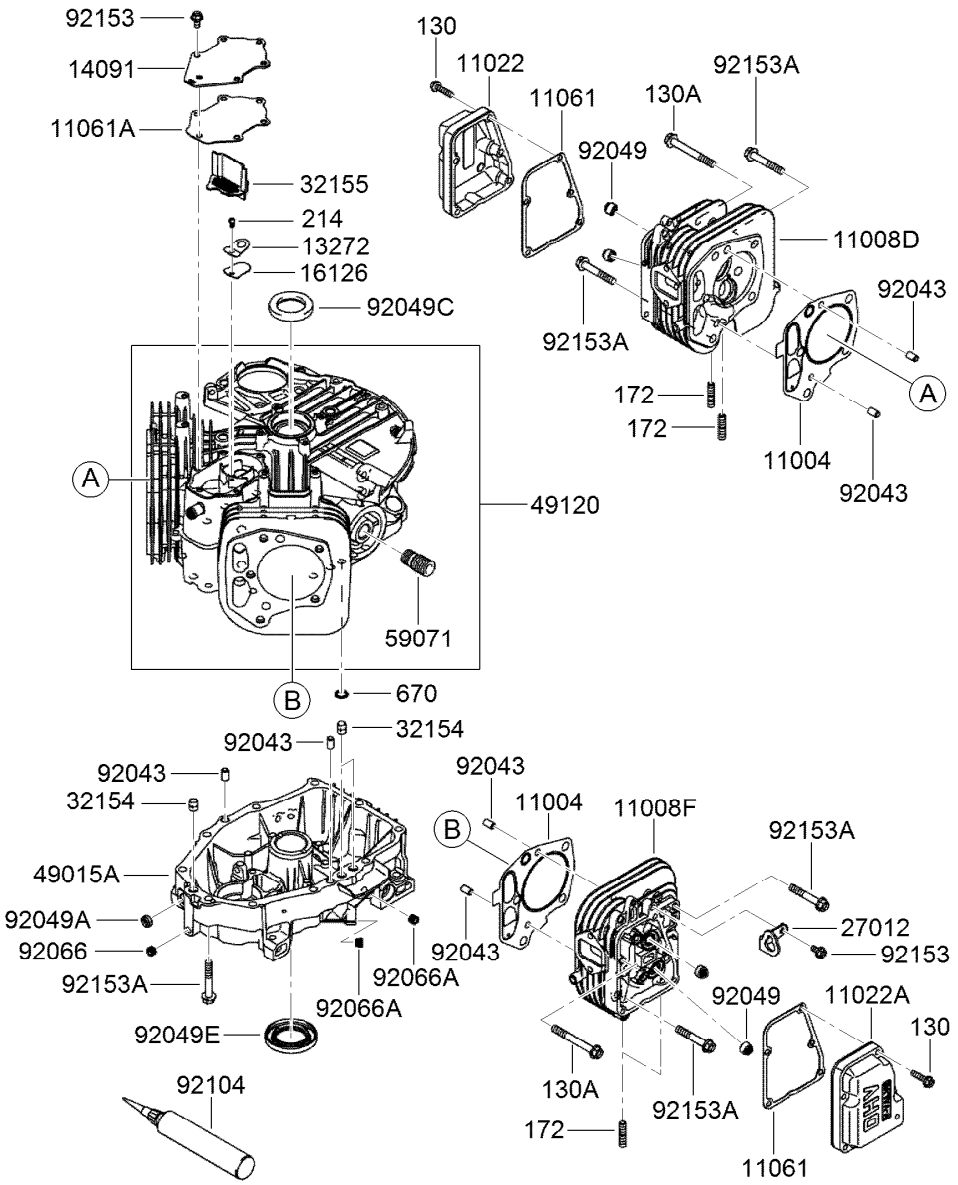


# Cylinder and Crankcase Assembly

| Ref. | Part Number | Qty. | Description |
|---|---|---|---|
| 130 | 93-8548 | 10 | Bolt-Flanged (6X25) |
| 130A | 120-7406 | 6 | Bolt-Flanged (8X70) |
| 172 | 114-8658 | 4 | Bolt-Stud (8X18) |
| 214 | 115-6422 | 1 | Screw-Pan (4X8) |
| 670 | 95-9771 | 2 | O-Ring (11Mm) |
| 11004 | 120-7400 | 2 | Gasket-Head |
| 11008D | 120-7401 | 1 | Cylinder Head No. 1 ASM |
| 11008F | 120-7402 | 1 | Cylinder Head No. 2 ASM |
| 11022 | 119-5803 | 1 | Case-Rocker (No.1) |
| 11022A | 119-5804 | 1 | Case-Rocker (No.2) |
| 11061 | 119-5805 | 2 | Gasket-Case, Rocker |
| 11061A | 119-5806 | 1 | Gasket-Breather |
| 13272 | 119-5808 | 1 | Plate-Breather |
| 14091 | 119-5809 | 1 | Cover-Breather |
| 16126 | 119-5810 | 1 | Valve-Breather |
| 27012 | 120-7403 | 1 | Hook-Lift |

| Ref. | Part Number | Qty. | Description |
|---|---|---|---|
| 32154 | 119-5811 | 3 | Pipe |
| 32155 | 119-5812 | 1 | Pipe-Breather |
| 49015A | 120-7404 | 1 | Cover-Crankcase |
| 49120 | 120-7405 | 1 | Crankcase ASM |
| 59071 | 95-9715 | 1 | Joint |
| 92043 | KW10694 | 6 | Pin |
| 92049 | 114-8650 | 4 | Seal-Oil, Rv C2 (6X11X10.2) |
| 92049A | 119-5816 | 1 | Seal-Oil, So (8X14X5) Hs |
| 92049C | 114-8652 | 1 | Seal-Oil, S D (35X48X8 R HSH) |
| 92049E | 119-5818 | 1 | Seal-Oil (38X62X8) Mtclv |
| 92066 | 119-5819 | 1 | Plug |
| 92066A | 119-5820 | 2 | Plug |
| 92104 | 119-5821 | 1 | Gasket-Liquid (Tb1217H) |
| 92153 | 114-8655 | 7 | Bolt (6X12) |
| 92153A | 114-8656 | 14 | Bolt (8X50) |

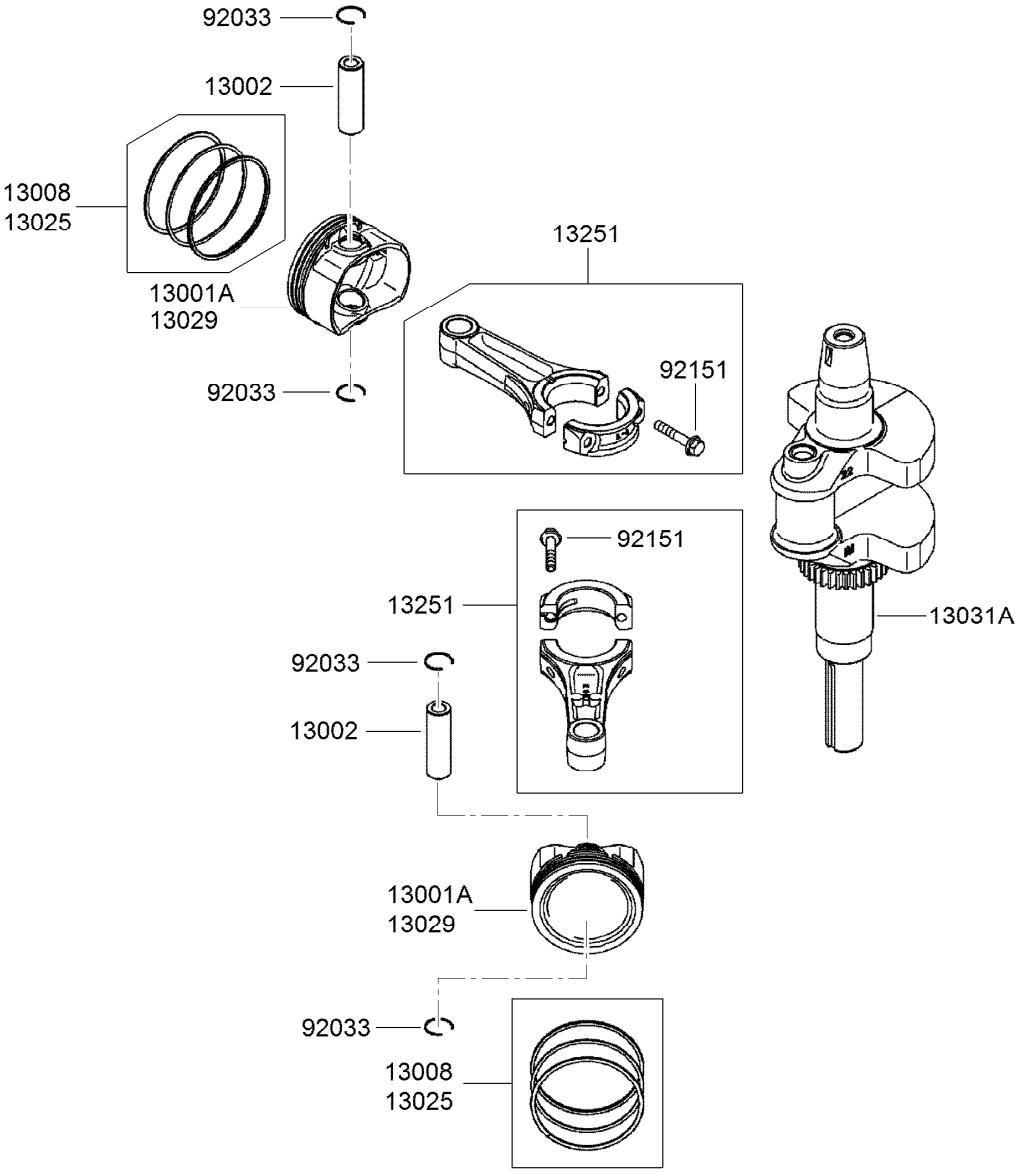


# Piston and Crankshaft Assembly

| Ref. | Part Number | Qty. | Description |
|---|---|---|---|
| 13001A | 120-7407 | 2 | Piston-Engine |
| 13002 | 108-2517 | 2 | Pin-Piston |
| 13008 | 120-7408 | 2 | Piston Ring Set |
| 13025 | 120-7409 | 1 | Piston Ring Set (L,0.5) |
| 13029 | 120-7410 | 1 | Piston Ring Set (L,0.5) |
| 13031A | 120-7411 | 1 | Crankshaft ASM |
| 13251 | 120-7412 | 2 | Connecting Rod ASM |
| 92033 | 114-8665 | 4 | Ring-Snap |
| 92151 | 115-6565 | 4 | Bolt (6X35) |

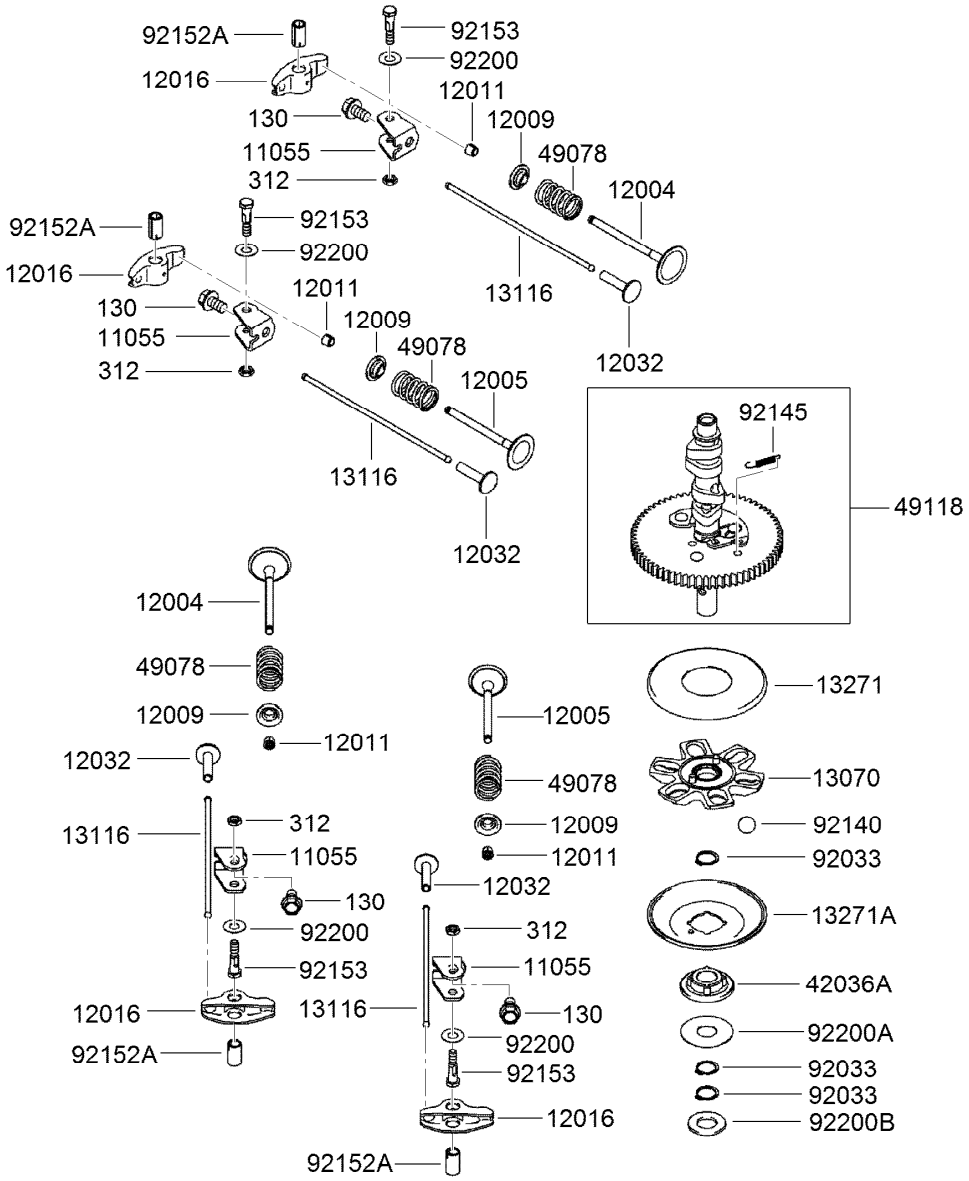


# Valve and Camshaft Assembly

| Ref. | Part Number | Qty. | Description |
|---|---|---|---|
| 130 | 119-5845 | 4 | Bolt-Flanged (8X14) |
| 312 | 119-5846 | 4 | Nut-Hex (6Mm) |
| 11055 | 119-5832 | 4 | Bracket |
| 12004 | 120-7413 | 2 | Valve-Intake |
| 12005 | 120-7414 | 2 | Valve-Exhaust |
| 12009 | 108-2525 | 4 | Retainer-Spring, Valve |
| 12011 | 95-9744 | 8 | Collet |
| 12016 | 119-5835 | 4 | Arm-Rocker |
| 12032 | 108-2527 | 4 | Tappet |
| 13070 | 119-5836 | 1 | Guide-Govenor |
| 13116 | 120-7415 | 4 | Rod-Push |
| 13271 | 114-8671 | 1 | Plate |

| Ref. | Part Number | Qty. | Description |
|---|---|---|---|
| 13271A | 114-8672 | 1 | Plate-Governor |
| 42036A | 120-7416 | 1 | Sleeve |
| 49078 | 119-5838 | 4 | Spring-Valve, Engine (In) |
| 49118 | 120-7417 | 1 | Camshaft ASM |
| 92033 | 114-8675 | 3 | Ring-Snap |
| 92140 | 114-8676 | 6 | Ball |
| 92145 | 114-8677 | 1 | Spring |
| 92152A | 120-7418 | 4 | Collar |
| 92153 | 119-5841 | 4 | Bolt (6X29.5) |
| 92200 | 119-5842 | 4 | Washer (8.1X18X0.5) |
| 92200A | 119-5843 | 1 | Washer (16X42X0.91) |
| 92200B | 119-5844 | 1 | Washer (16.3X30X2.28) |

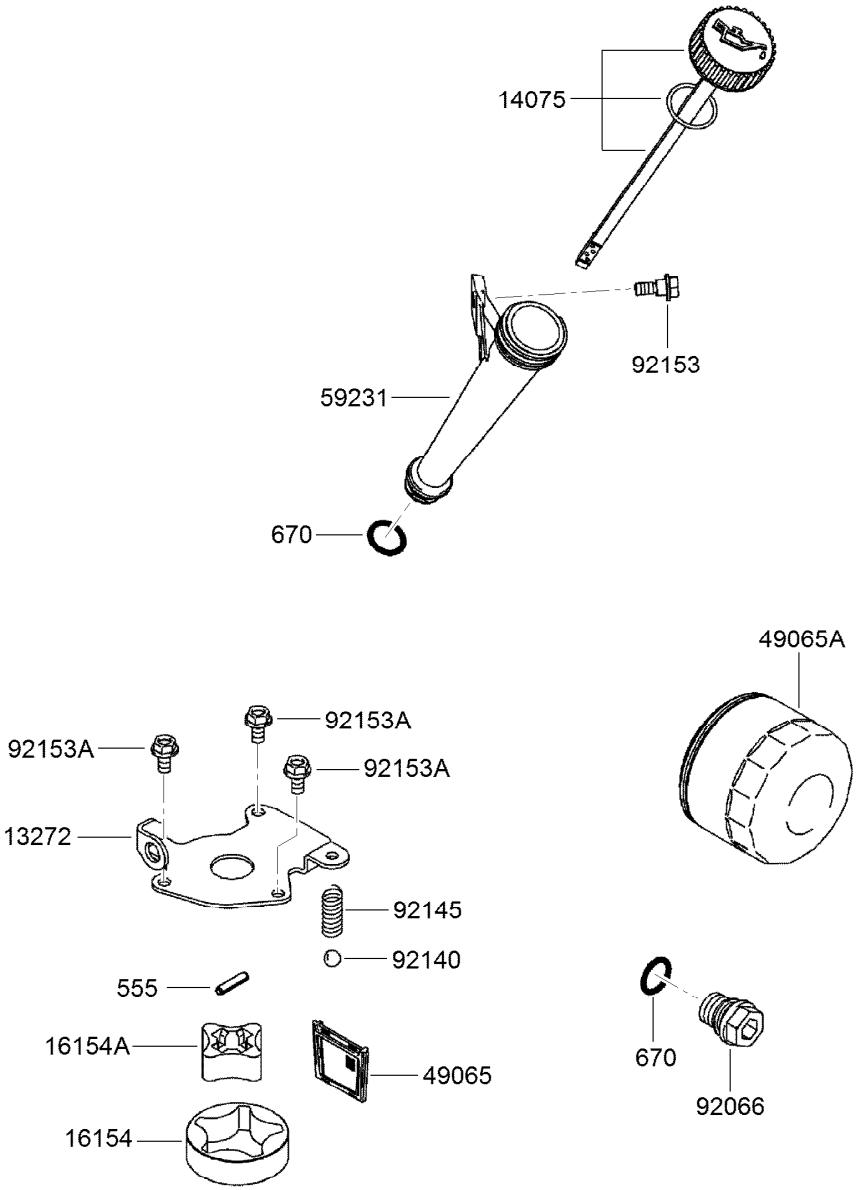


# Lubrication Equipment Assembly

| *Ref.* | *Part Number* | *Qty.* | *Description* |
|---|---|---|---|
| 555 | 119-5859 | 1 | Pin-Spring (4X20) |
| 670 | 1-413506 | 2 | Discontinued |
| 13272 | 119-5847 | 1 | Plate-Rotor |
| 14075 | 119-5848 | 1 | Oil Gauge Cap ASM |
| 16154 | 119-5849 | 1 | Rotor-Pump, Outer |
| 16154A | 119-5850 | 1 | Rotor-Pump, Inner |
| 49065 | 119-5851 | 1 | Filter-Oil |
| 49065A | 119-5852 | 1 | Filter-Oil |
| 59231 | 119-5853 | 1 | Tube-Filler, Oil |
| 92066 | 119-5854 | 1 | Plug |
| 92140 | 119-5856 | 1 | Ball |
| 92145 | 119-5857 | 1 | Spring |
| 92153 | 114-8697 | 1 | Bolt |
| 92153A | 115-6419 | 3 | Bolt (6X12) |

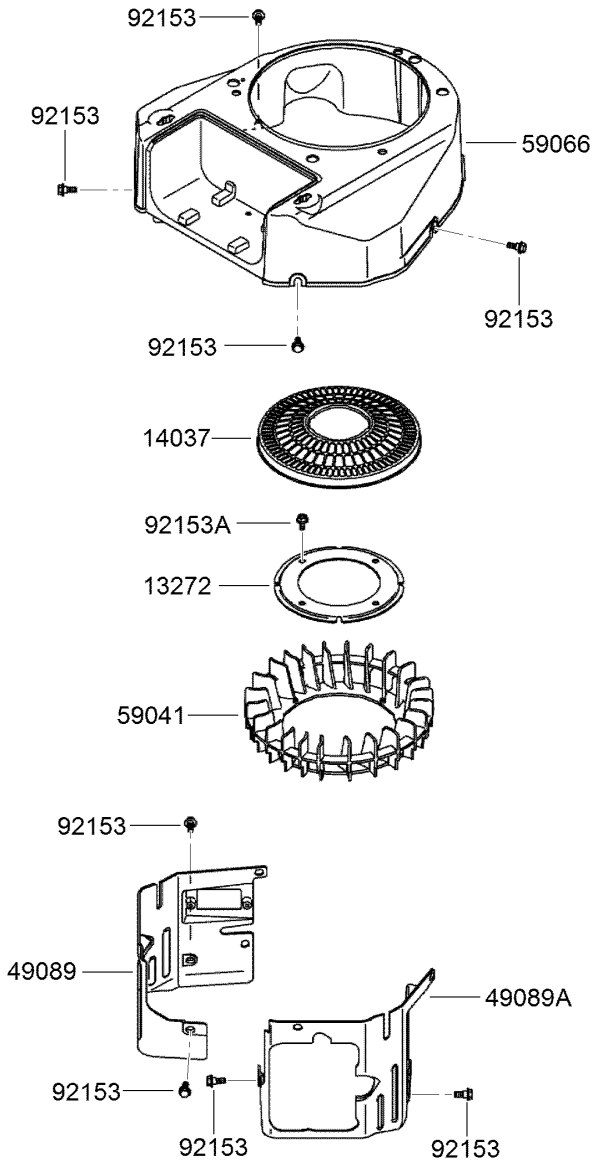


# Cooling Equipment Assembly

| *Ref.* | *Part Number* | *Qty.* | *Description* |
|---|---|---|---|
| 13272 | 119-5860 | 1 | Plate-Fan |
| 14037 | 120-7419 | 1 | Screen |
| 49089 | 120-7420 | 1 | Shroud-Engine |
| 49089A | 120-7421 | 1 | Shroud-Engine |
| 59041 | 120-7422 | 1 | Fan |
| 59066 | 120-7423 | 1 | Housing-Fan |
| 92153 | 120-7424 | 8 | Bolt |
| 92153A | 114-8655 | 4 | Bolt (6X12) |

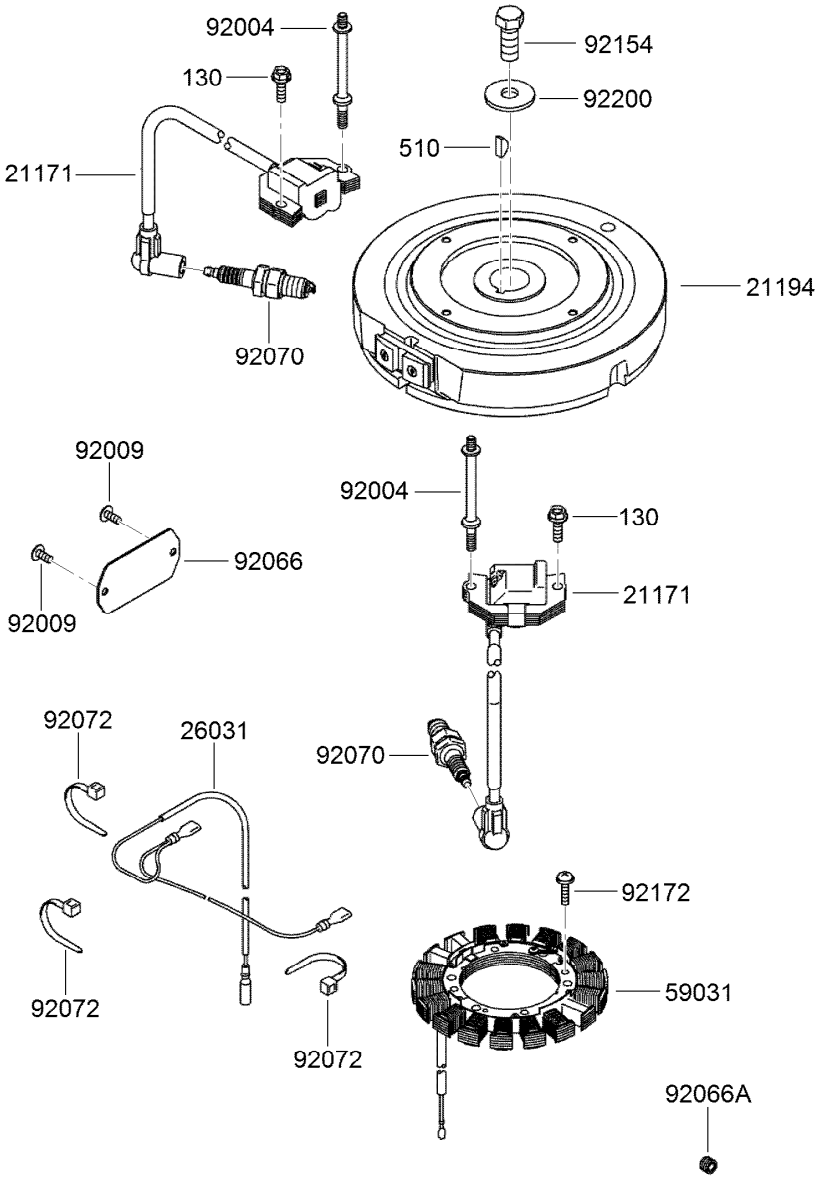


# Electric Equipment Assembly

| Ref. | Part Number | Qty. | Description |
|---|---|---|---|
| 130 | 95-9893 | 2 | Bolt-Flanged (6X20) |
| 510 | KW10163 | 1 | Key-Woodruff |
| 21171 | 119-5872 | 2 | Ignition Coil ASM |
| 21194 | 120-7425 | 1 | Flywheel ASM |
| 26031 | 119-5876 | 1 | Harness |
| 59031 | 120-7476 | 1 | Coil-Charging |
| 92004 | 120-7426 | 2 | Stud (6X74.6) |
| 92009 | 95-9716 | 2 | Screw |
| 92066 | 115-6406 | 1 | Plug |
| 92066A | 119-5820 | 1 | Plug |
| 92070 | 92-2153 | 2 | Spark Plug |
| 92072 | 115-6585 | 3 | Band |
| 92154 | 120-7427 | 1 | Bolt (12X30) |
| 92172 | 115-4030 | 4 | Screw (5X20) |
| 92200 | 115-4031 | 1 | Washer (12.2X46X3) |

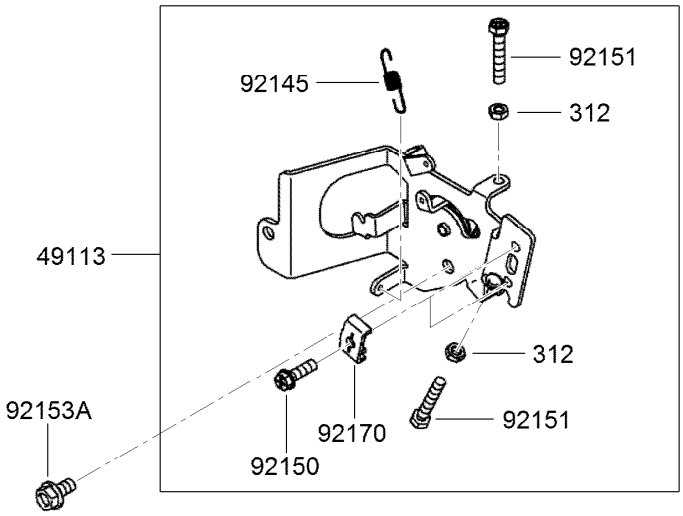


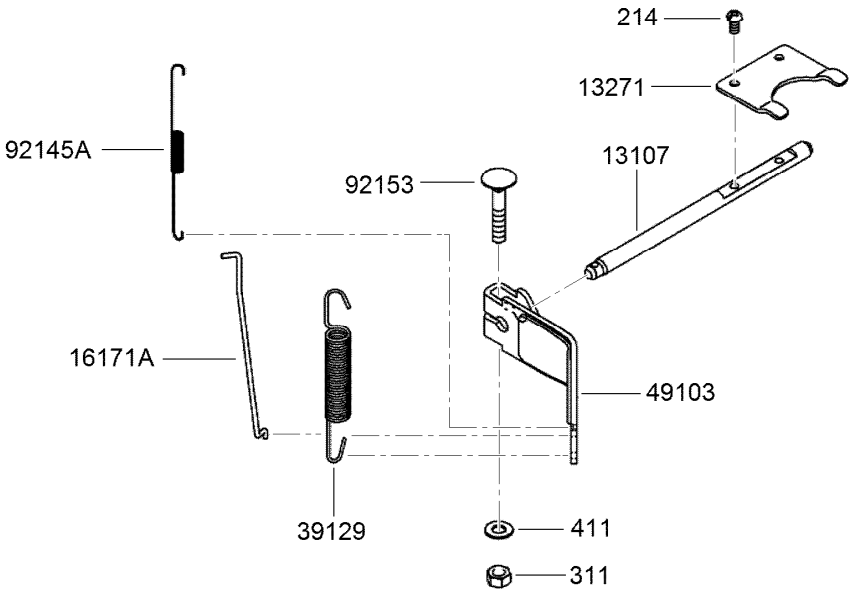


# Control Equipment Assembly

| Ref. | Part Number | Qty. | Description |
|---|---|---|---|
| 214 | 115-6422 | 2 | Screw-Pan (4X8) |
| 311 | 114-8698 | 1 | Nut-Hex (6Mm) |
| 312 | 119-5894 | 2 | Nut-Hex (5Mm) |
| 411 | 115-6423 | 1 | Washer-Plain (6Mm) |
| 13107 | 120-7428 | 1 | Shaft |
| 13271 | 119-5883 | 1 | Plate |
| 16171A | 120-7429 | 1 | Link |
| 39129 | 120-7430 | 1 | Spring-Governor |
| 49103 | 120-7431 | 1 | Arm-Governor |

| Ref. | Part Number | Qty. | Description |
|---|---|---|---|
| 49113 | 120-7432 | 1 | Control Panel ASM |
| 92145 | 115-6418 | 1 | Spring |
| 92145A | 119-5889 | 1 | Spring |
| 92150 | 95-9853 | 2 | Bolt (5X18) |
| 92151 | 119-5891 | 2 | Bolt (5X30) |
| 92153 | 115-6420 | 1 | Bolt (6X35) |
| 92153A | 114-8655 | 1 | Bolt (6X12) |
| 92170 | 115-6421 | 2 | Clamp |

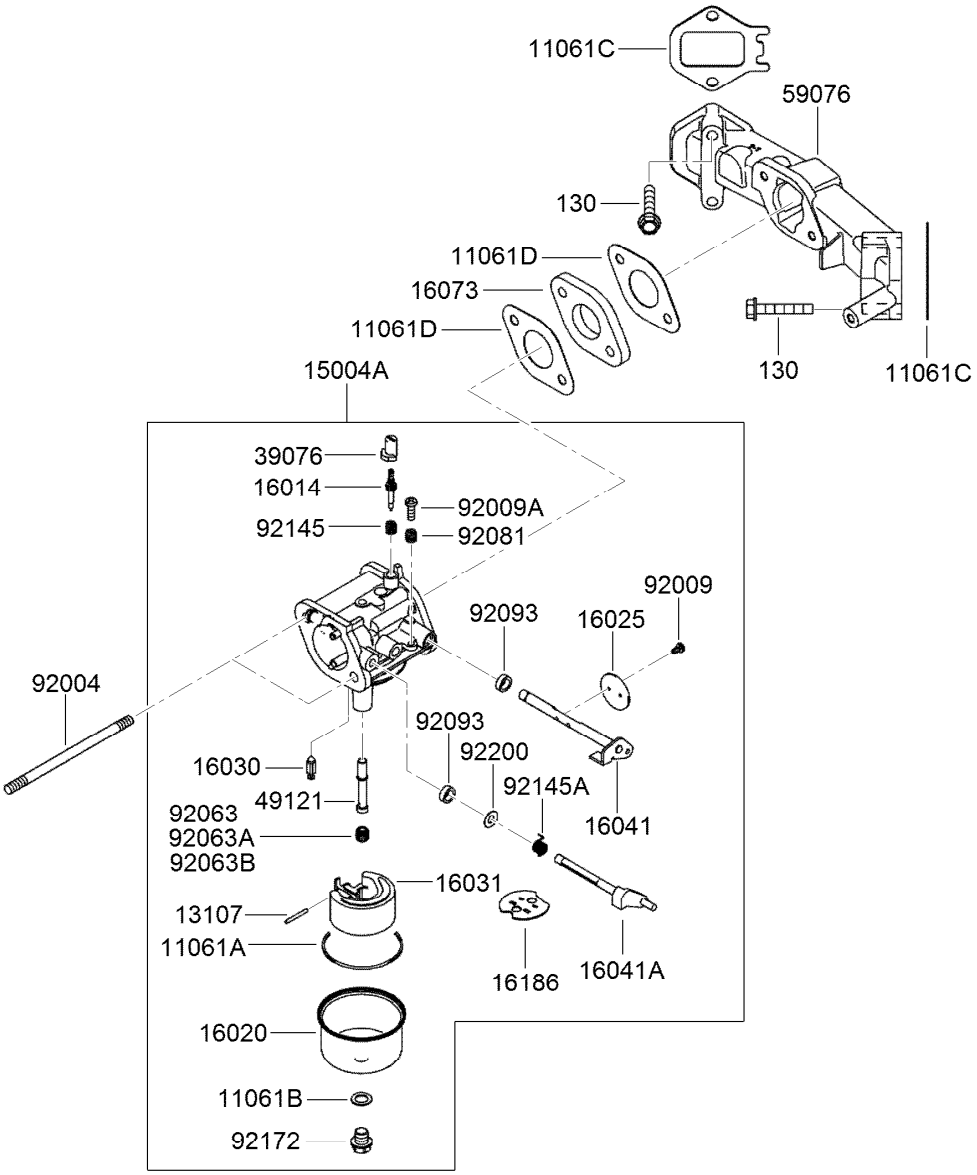


# Carburetor Assembly

| Ref. | Part Number | Qty. | Description |
|---|---|---|---|
| 130 | 115-6591 | 4 | Bolt-Flanged (6X35) |
| 11061A | 115-6425 | 1 | Gasket-Chamber |
| 11061B | 108-2580 | 1 | Gasket-Screw |
| 11061C | 120-7433 | 2 | Gasket-Manifold |
| 11061D | 120-7434 | 2 | Gasket-Insulator |
| 13107 | 115-6427 | 1 | Shaft |
| 15004A | 120-7435 | 1 | Carburetor ASM |
| 16014 | 120-7436 | 1 | Screw-Air, Pilot |
| 16020 | 115-6430 | 1 | Chamber-Float |
| 16025 | 115-6431 | 2 | Valve-Throttle |
| 16030 | 115-6432 | 1 | Valve-Float |
| 16031 | 115-6433 | 1 | Float |
| 16041 | 115-6435 | 1 | Shaft-Throttle, Carburetor |
| 16041A | 120-7437 | 1 | Shaft-Carburetor, Choke |
| 16073 | 115-6594 | 1 | Insulator |
| 16186 | 120-7438 | 1 | Choke Valve ASM |

| Ref. | Part Number | Qty. | Description |
|---|---|---|---|
| 39076 | 108-2593 | 1 | Limiter |
| 49121 | 120-7439 | 1 | Nozzle-Main |
| 59076 | 120-7440 | 1 | Manifold-Intake |
| 92004 | 120-7441 | 2 | Stud (6X95) |
| 92009 | 108-2595 | 2 | Screw |
| 92009A | 108-2596 | 1 | Screw |
| 92063 | 115-6602 | 1 | Jet-Main, No. 100 |
| 92063A | 120-7442 | 1 | Jet-Main, No. 098 (6560 Ft) |
| 92063B | 120-7443 | 1 | Jet-Main, No. 102 |
| 92081 | 108-2598 | 1 | Spring |
| 92093 | 108-2599 | 2 | Seal |
| 92145 | 108-2600 | 1 | Spring |
| 92145A | 120-7444 | 1 | Spring |
| 92172 | 108-2601 | 1 | Screw |
| 92200 | 120-7445 | 1 | Washer (9.8X5.5X1.0) |

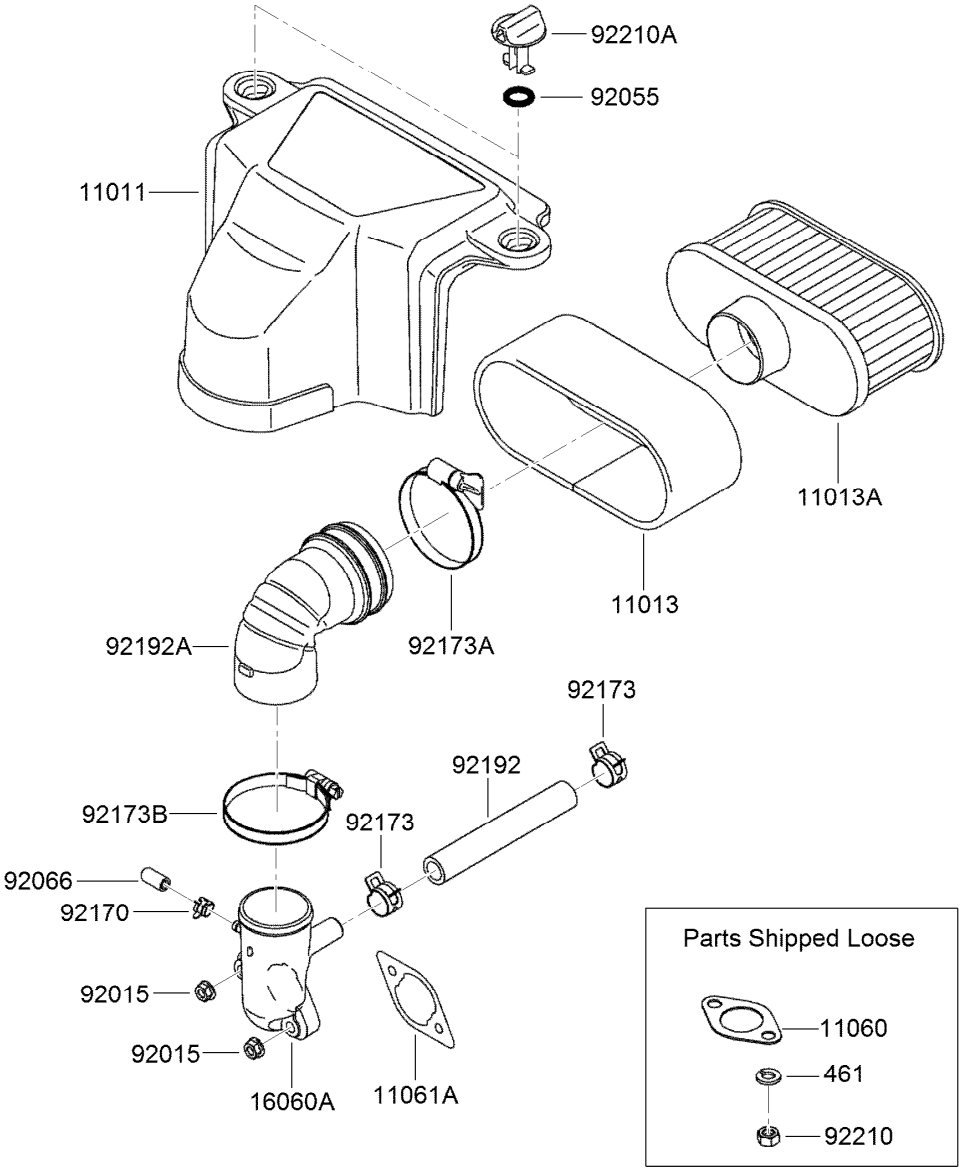


# Air Filter and Muffler Assembly

| Ref. | Part Number | Qty. | Description |
|---|---|---|---|
| 461 | 119-5962 | 4 | Washer-Spring (8Mm) |
| 11011 | 120-7477 | 1 | Case-Filter, Air |
| 11013 | 120-7447 | 1 | Element-Filter, Air |
| 11013A | 120-7448 | 1 | Element-Filter, Air |
| 11060 | 119-5948 | 2 | Gasket-Muffler |
| 11061A | 120-7449 | 1 | Gasket-Cleaner, Air |
| 16060A | 120-7450 | 1 | Pipe-Intake |
| 92015 | 119-5954 | 2 | Nut |
| 92055 | 120-7451 | 2 | O-Ring |

| Ref. | Part Number | Qty. | Description |
|---|---|---|---|
| 92066 | 120-7452 | 1 | Plug |
| 92170 | 120-7453 | 1 | Clamp |
| 92173 | 119-5956 | 2 | Clamp |
| 92173A | 120-7454 | 1 | Clamp |
| 92173B | 120-7455 | 1 | Clamp |
| 92192 | 119-5957 | 1 | Tube (12.6X18.6X118) |
| 92192A | 120-7456 | 1 | Tube-A/C |
| 92210 | 119-5959 | 4 | Nut (M8) |
| 92210A | 120-7457 | 2 | Nut |

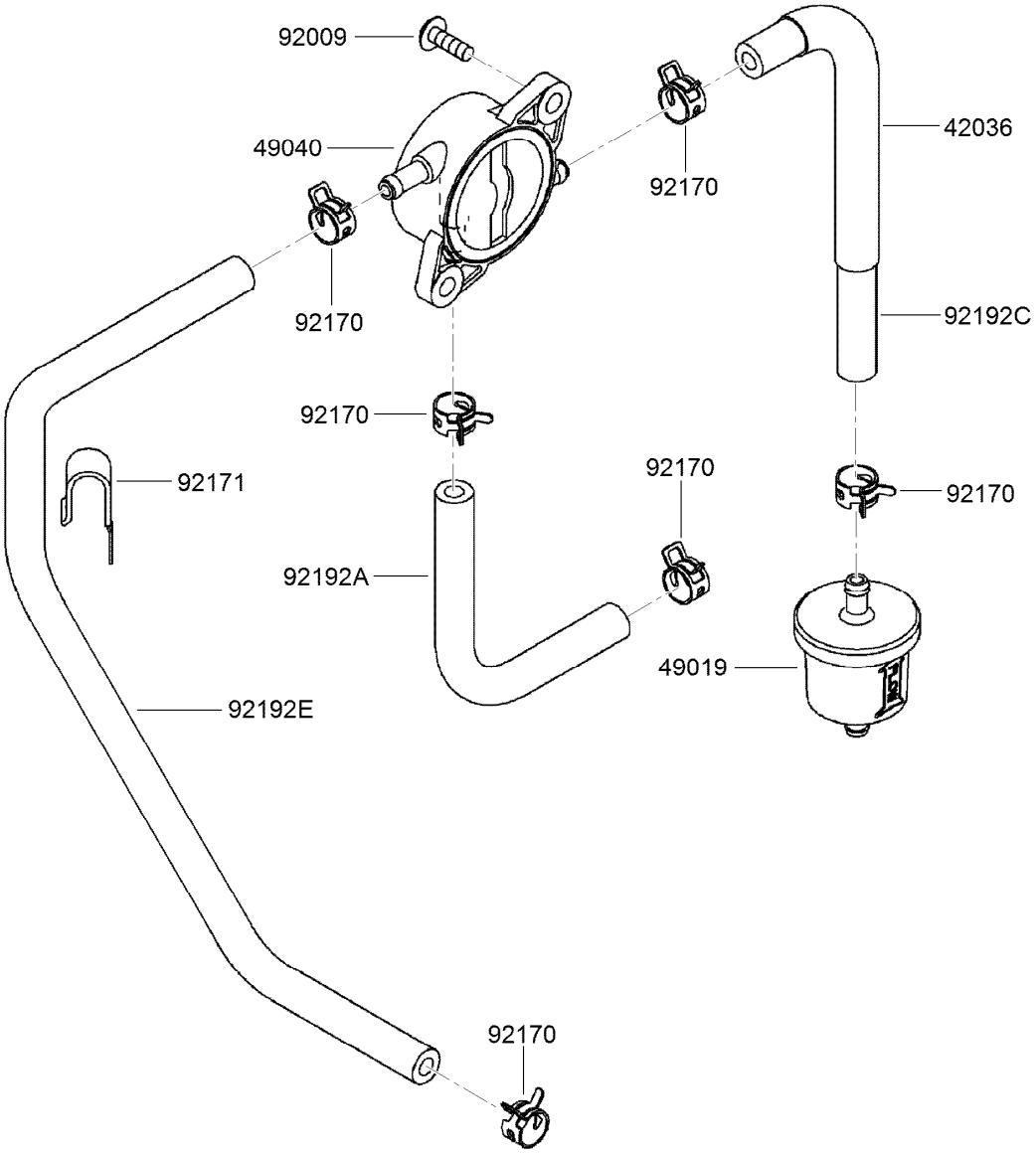


# Fuel Pump and Filter Assembly

| *Ref.* | *Part Number* | *Qty.* | *Description* |
|---|---|---|---|
| 42036 | 119-5963 | 1 | Sleeve |
| 49019 | 121-4570 | 1 | Filter-Fuel |
| 49040 | 119-5965 | 1 | Pump-Fuel |
| 92009 | 119-5879 | 2 | Screw |
| 92170 | 119-5967 | 6 | Clamp |
| 92171 | 119-5968 | 1 | Clamp |
| 92192A | 119-5970 | 1 | Tube (6.4X12.7X150) |
| 92192C | 120-7458 | 1 | Tube (6.35X12.7X185) |
| 92192E | 120-7459 | 1 | Tube (6.35X12.7X360) |

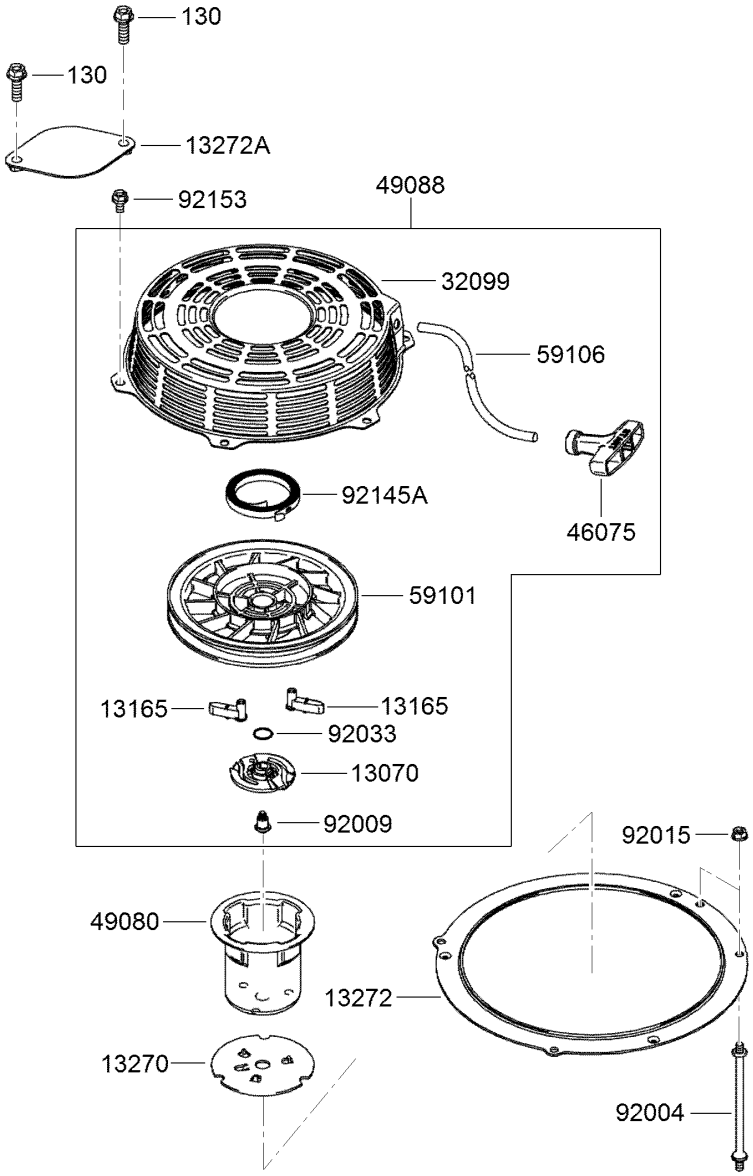


# Starter Assembly

| Ref. | Part Number | Qty. | Description |
|---|---|---|---|
| 130 | 120-7474 | 2 | Bolt-Flanged (8X25) |
| 13070 | 120-7460 | 1 | Guide |
| 13165 | 120-7461 | 2 | Pawl-Starter, Recoil |
| 13270 | 114-8689 | 1 | Plate |
| 13272 | 120-7462 | 1 | Plate |
| 13272A | 120-7463 | 1 | Plate |
| 32099 | 120-7464 | 1 | Case-Starter, Recoil |
| 46075 | 120-7465 | 1 | Grip-Starter, Recoil |
| 49080 | 120-7466 | 1 | Pulley-Starting |

| Ref. | Part Number | Qty. | Description |
|---|---|---|---|
| 49088 | 120-7467 | 1 | Starter-Recoil |
| 59101 | 120-7468 | 1 | Reel-Starter, Recoil |
| 59106 | 120-7469 | 1 | Rope (5X1500) |
| 92004 | 120-7470 | 2 | Stud (6X121.3) |
| 92009 | 120-7471 | 1 | Screw |
| 92015 | 119-5954 | 4 | Nut |
| 92033 | 120-7472 | 1 | Ring-Snap |
| 92145A | 120-7473 | 1 | Spring |
| 92153 | 114-8655 | 3 | Bolt (6X12) |

56070

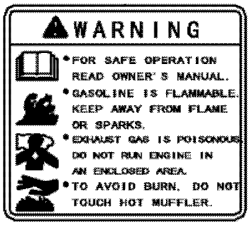


56080

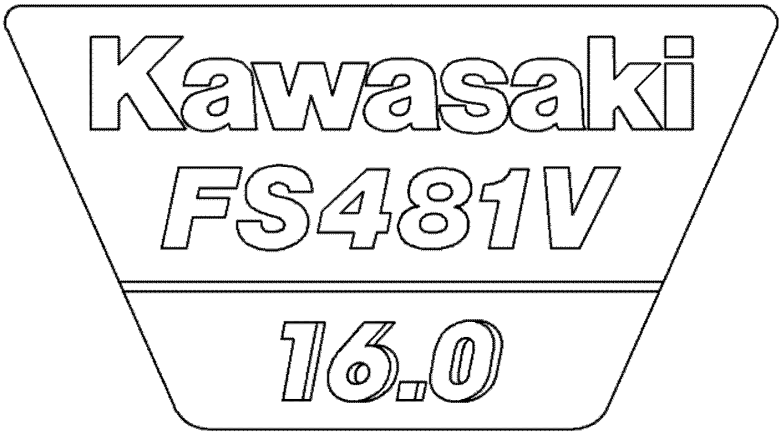


# Label Set

| Ref. | Part Number | Qty. | Description |
|---|---|---|---|
| 56070 | 108-2625 | 1 | Label-Warning |
| 56080 | 120-7475 | 1 | Label-Brand |

# Attachments and Accessories

## For 22972 TRX-16 Trencher

| Product Name | Model/Part |
|---|---|
| Crumber Kit | 22477 |
| 24in X 4in Soil Chain | 22480 |
| 24in X 4in Combination Chain | 22481 |
| 24in X 4in Rock Tooth Chain | 22482 |
| 24in X 6in Soil Chain | 22483 |
| 24in X 6in Combination Chain | 22484 |
| 24in X 6in Rock Tooth Chain | 22485 |
| 36in X 4in Soil Chain | 22486 |
| 36in X 4in Combination Chain | 22487 |
| 36in X 4in Rock Tooth Chain | 22488 |
| 36in X 6in Rock Tooth Chain | 22489 |
| 36in X 6in Soil Chain | 22490 |
| 36in X 6in Combination Chain | 22491 |
| 48in x 4in Soil Chain | 22492 |
| 48in x 4in Combination Chain | 22493 |
| 48in x 6in Soil Chain | 22494 |
| 48in x 6in Combination Chain | 22495 |
| 24in X 4in Bullet Chain | 22496 |
| 24in X 6in Bullet Chain | 22497 |
| 36in X 4in Bullet Chain | 22498 |
| 36in X 6in Bullet Chain | 22499 |
| 24in Trencher Boom | 22975 |
| 36in Trencher Boom | 22976 |
| 48in Trencher Boom | 22977 |
| Bore Drive Attachment | 22978 |
| Backfill Blade | 22980 |
| Spark Arrestor Screen | 94-8157 |

**Notes:**

**Notes:**

TORO®

Count on it.