FORM NO. 3316–389

TORO®

MODEL NO. 38310– 49000001 & UP

OPERATOR'S MANUAL

POWER SHOVEL™

IMPORTANT SAFETY INSTRUCTIONS

⚠ WARNING

To assure maximum safety, best performance, and to gain knowledge of the product, it is essential that you or any other operator of the Power Shovel read and understand the contents of this manual before the motor is ever started. Pay particular attention to the safety alert symbol ⚠ which means CAUTION, WARNING, OR DANGER — "personal safety instruction." Read and understand the instruction because it has to do with safety. FAILURE TO COMPLY WITH INSTRUCTION MAY RESULT IN PERSONAL INJURY.

SAVE THESE INSTRUCTIONS FOR FUTURE REFERENCE

BEFORE OPERATING

1. Read and understand the contents of this manual before operating the Power Shovel. Become familiar with all controls and know how to stop quickly.

2. Keep everyone, especially children and pets, away from area of operation. Never allow children to operate the Power Shovel.

3. Inspect area thoroughly where the Power Shovel will be used. Remove doormats, sleds, boards, sticks, wire, and any other foreign objects which might be picked up and thrown by the Power Shovel. Never direct discharge towards people.

4. Keep all shields and safety devices in place. If a shield, safety device, or decal is illegible or damaged, repair or replace it before operation is commenced. Also, tighten any loose nuts, bolts, or screws.

5. Wear adequate winter clothing and rubber boots that will assure secure footing on slippery surfaces. Do not wear loose–fitting clothing that could possibly get caught in moving parts.

6. Do not use the Power Shovel on gravel or crushed rock surfaces unless used in accordance with Operating Instructions; refer to page 5, item 4.

7. ⚠ **WARNING**—To prevent electric shock, use only a UL approved extension cord suitable for outdoor use in cold temperatures (16 gauge minimum). Replace a damaged extension cord immediately.

8. To prevent disconnection of the Power Shovel cord from the extension cord during operation, tie the extension cord to the lower handle before connecting to the Power Shovel cord; refer to page 6, Figure 6 for proper procedures.

WHILE OPERATING

9. Never operate the Power Shovel near bystanders, pets, glass enclosures, automobiles and trucks, window wells, or a drop–off without proper adjustment of the snow discharge angle; refer to Operating Tips, page 5, item 2.

10. Avoid accidental starting. Do not insert key until after the Power Shovel is plugged in. Also, remove key before carrying plugged in unit.

11. If cord is damaged in any manner while plugged in, pull extension cord from wall receptacle and replace the cord.

12. Do not abuse cord. Never carry the Power Shovel by the cord or pull sharply on the cord to disconnect from receptacle. Keep cord away from heat, oil, and sharp edges.

13. Operate the Power Shovel only when there is good visibility or light. Always maintain secure footing and balance and keep a firm grip on the handle. **DO NOT USE THE POWER SHOVEL ON A ROOF.**

14. Be attentive when using the Power Shovel, and stay alert for holes in the terrain and other hidden hazards.

15. STAY AWAY FROM DISCHARGE OPENING WHILE OPERATING THE POWER SHOVEL. Keep face, hands, feet, and any other part of your body or clothing away from concealed, moving or rotating parts.

©The Toro Company–1993
All Rights Reserved

⚠ SAFETY INSTRUCTIONS

16. Clear snow from slopes by going up and down, never across the face. Use caution when changing directions. Never clear snow from steep slopes.

17. Do not overload the Power Shovel by clearing snow at too fast a rate. Let the unit do the work.

18. If a solid object is hit or the Power Shovel vibrates abnormally, stop the Power Shovel and wait for all movement to stop. Disconnect extension cord and check the Power Shovel immediately for possible damage, an obstruction, or loose parts. Vibration is generally a warning of trouble. Repair any damage before operating the Power Shovel again.

19. If the Power Shovel will be left unattended, disconnect cord from receptacle and remove key from handle.

20. Before adjusting, cleaning, repairing, or inspecting the Power Shovel, or before unclogging the discharge chute, stop the Power Shovel and wait for all moving parts to stop. Also, disconnect cord from receptacle to prevent accidental starting.

21. Let machine run for a few minutes after clearing snow so moving parts do not freeze.

MAINTAINING POWER SHOVEL

22. Perform only those maintenance instructions described in this manual. Disconnect cord from receptacle before performing maintenance procedures to prevent the possibility of accidental starting. If major repairs are ever needed, contact your local Authorized TORO Service Dealer or TORO Service Center for assistance.

23. Keep the Power Shovel in safe operating condition by keeping nuts, bolts, and screws tight. Check all fasteners frequently to assure they are tight.

24. Store the Power Shovel indoors when not in use in a dry, locked-up place out of reach of children. Disconnect the extension cord from the Power Shovel before storing. Remove key from handle. Store key in a memorable place.

25. At the time of manufacture, the Power Shovel conformed to and exceeded safety standards in effect for electric snow movers. Therefore, to assure best performance and safety, purchase only genuine TORO replacement parts and accessories. NEVER USE "WILL FIT" REPLACEMENT PARTS AND ACCESSORIES. The TORO logo assures that replacement parts are genuine.

26. This product is intended for residential household use only.

⚠ SAFETY DECALS

Safety and instruction decals are easily visible to the operator and are located near any area of potential danger. Replace any decal that is damaged or lost.

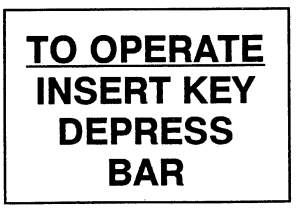

On Rear of Control Grip
(Part No. 38-8340)

ASSEMBLY INSTRUCTIONS

⚠ CAUTION

Before assembly, inspect internal wiring and wire harness assembly for damage. If damaged, do not assemble. Contact your TORO Service Dealer or TORO Service Center.

During assembly, be careful not to damage the internal wiring inside tubing. DAMAGE TO THE INTERNAL WIRING COULD CAUSE SERIOUS ELECTRICAL SHOCK RESULTING IN PERSONAL INJURY DURING OPERATION. If damage does occur, do not assemble. Contact your TORO Service Dealer or TORO Service Center.

ASSEMBLE UPPER AND LOWER TUBES

1. Remove shipping wire secured to upper and lower tube sections (Fig.1).

2. Slide the adjustable handle onto the lower tube (Fig. 2).

3. Slide lower tube into upper tube until screw holes are aligned (Fig. 3).

4. Secure upper and lower tubes by inserting countersunk nut and slotted screw (supplied in loose parts bag) through the aligned holes in tubing (Fig. 3).

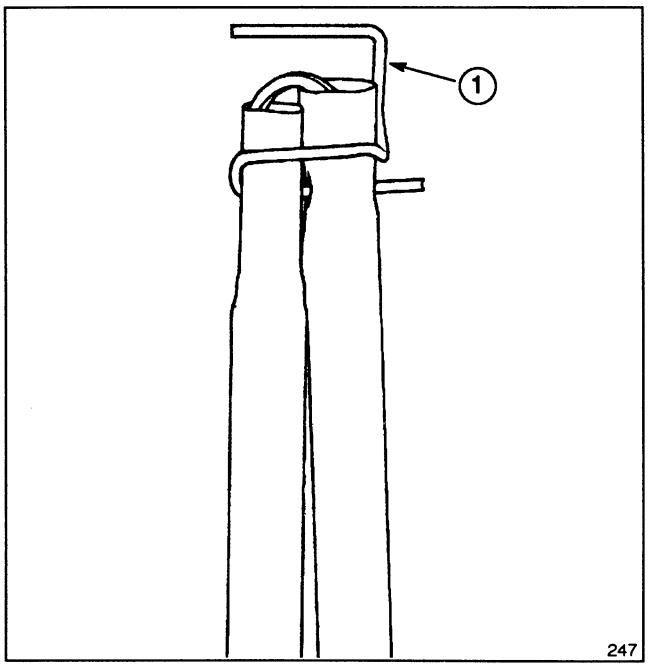

Figure 1

1. Shipping wire

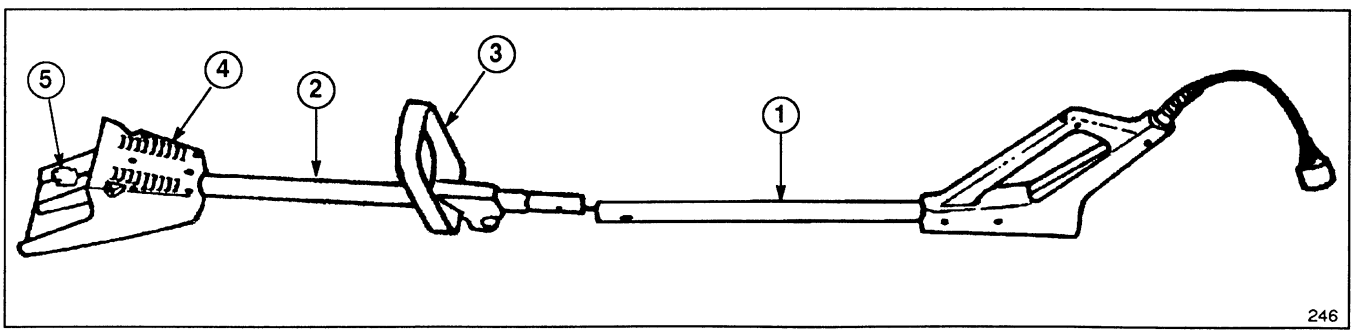

Figure 2

1. Upper tube
2. Lower tube
3. Adjustable handle
4. Handle support
5. Wire harness

ASSEMBLY INSTRUCTIONS

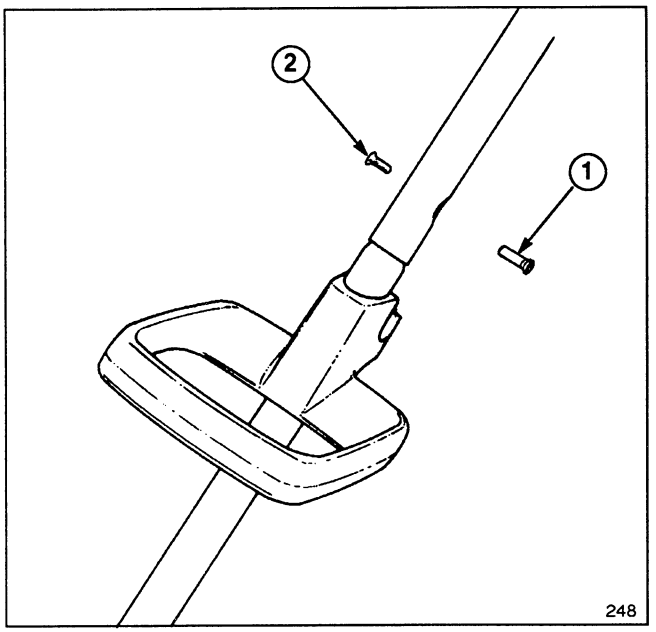

Figure 3

1. Countersunk nut 2. Slotted screw

Note: If the internal wiring is blocking the hole, gently move the wiring to one side using shipping wire. (Discard shipping wire after assembly is complete.)

5. Loosely secure adjustable handle to tube with carriage bolt and knob (supplied in loose parts bag) as shown in Figure 4.

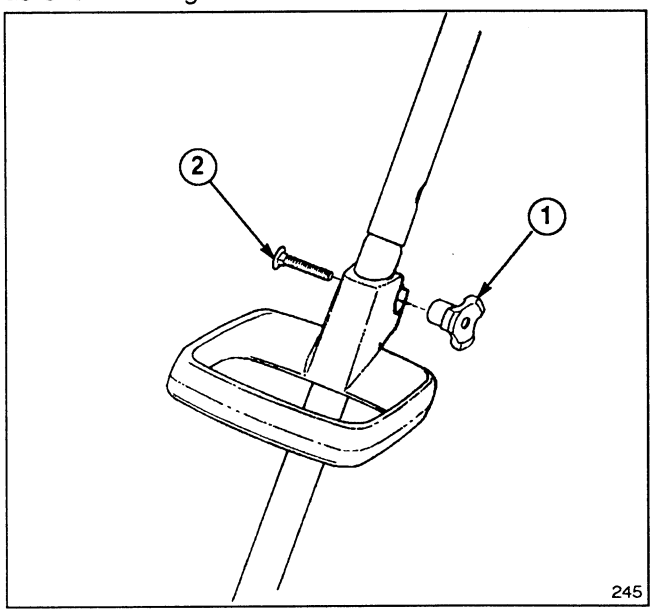

Figure 4

1. Carriage bolt 2. Knob

6. Move adjustable handle to desired operating position by sliding handle to desired height and tightening knob.

ATTACH POWER HEAD

1. Position the power head and handle support as shown in Figure 5A.

2. Pull the power head connector out of the motor housing hole.

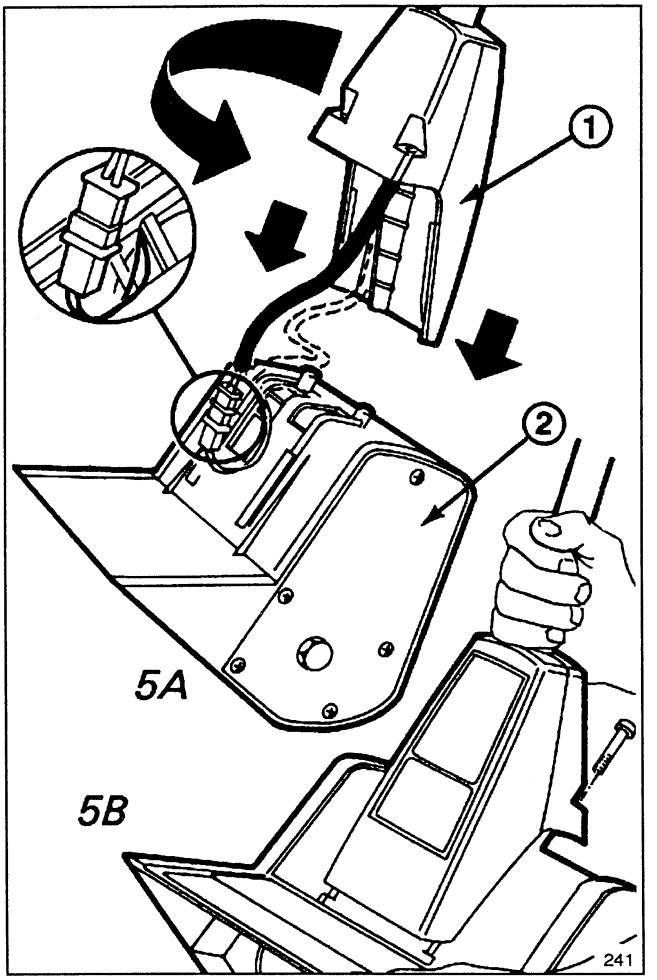

Figure 5

1. Handle support 2. Power head

3. Assemble the power head connector and the handle connector by sliding the connectors together (Fig. 5A) until they snap.

Note: There is only one way to fit the connectors together.

4. Push the connectors into the motor housing hole.

5. Make sure the handle support is positioned as shown in Figure 5B (the Toro Power Shovel decal should be facing up). Slide the handle support over the power head. Be sure the grooves in the handle support and power head are interlocked (Fig. 5B).

IMPORTANT: If the handle support does not slide completely into position, check the electrical wiring and connectors to be sure they are inside the motor housing hole and not interfering with assembly.

6. Insert a 1/4" x 1" Phillips head screw (supplied in loose parts bag) through the hole in the rear of the handle support (Fig. 5B) and screw securely into motor housing. Repeat with second screw.

OPERATING INSTRUCTIONS

PREPARATION

1. Tie extension cord to the lower handle of control grip (Fig. 6) before connecting to the Power Shovel cord. This helps prevent the separation of the cords during operation.

2. Plug the extension cord into a wall outlet and insert key into hole located on the front side of the control grip (Fig. 6).

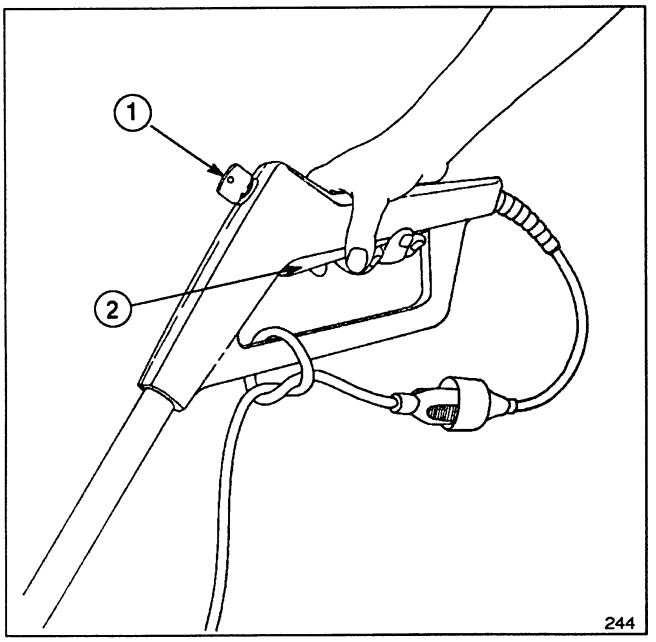

Figure 6

1. Key 2. Switch Bar

⚠ CAUTION

Use only a UL approved extension cord suitable for outdoor use in cold temperatures (16 gage minimum).

3. Keep the area to be cleared free of stones, toys, or other foreign objects which may be picked up and thrown by the rotor blades. Such items could be covered by snowfall and, therefore, unnoticed until struck by the rotor blades. Always be sure to keep children and pets away from area of operation.

STARTING/STOPPING

To start the Power Shovel, install the key and squeeze the switch bar. To stop, release the switch bar (Fig. 6).

UPL-56951

OPERATING TIPS

1. Start the Power Shovel and tilt it forward until the scraper blade contacts the ground. Push the Power Shovel forward at a rate of speed comfortable for the operator yet slow enough to clear path completely. The width and depth of the snow may determine the speed of travel.

2. Direct the snow to the right or left by holding the Power Shovel at a slight angle (Fig. 7).

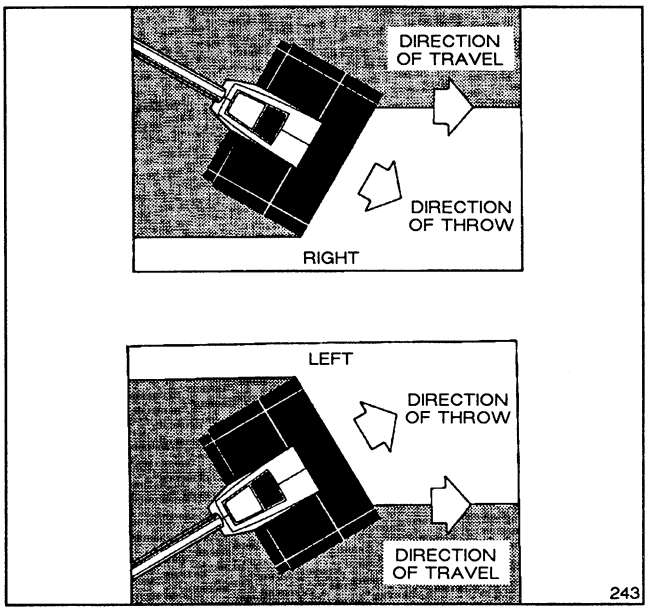

Figure 7

3. For the most efficient snow removal, throw the snow downwind, and slightly overlap each swath.

4. Should you find it necessary to clear snow from crushed rock or gravel, push down on handle to raise scraper clear of loose material that could be thrown by the blades.

5. The Power Shovel is designed to remove snow up to 4" deep in one pass. When clearing deeper drifts, hold the unit by the upper and lower handles and use a swinging or sweeping motion. Remove a maximum of 4" with each pass and repeat as many times as required.

6. Keep cord clear of obstructions, sharp objects, and rotor. Do not pull sharply on the cord or abuse it in any manner. Frequently inspect cord for damage. If damaged, replace cord.

7. Remove the key and disconnect the extension cord when through using the Power Shovel. Keep key in a memorable place so it will not be misplaced. Hang the Power Shovel on a nail from the hole in the rear of the control grip. Hang the extension cord with the Power Shovel so it will not be misplaced or possibly damaged.

MAINTENANCE

> **⚠ CAUTION**
>
> **To prevent accidental operation of the Power Shovel while performing maintenance, disconnect extension cord and remove key from handle.**

LUBRICATING POWER SHOVEL

The Power Shovel does not have to be lubricated as all bearings are lubricated for the life of the product.

PREPARE POWER SHOVEL FOR STORAGE

1. Examine the Power Shovel thoroughly for worn, loose, or damaged parts. If parts repair or replacement is necessary, contact your local Authorized TORO Service Dealer for assistance.
2. Examine extension cord thoroughly for signs of excess wear or damage. If worn or damaged, replace extension cord.
3. Disconnect extension cord from the Power Shovel before storing. Remove key from handle and store in a memorable place.
4. Store the Power Shovel in a clean, dry, locked–up place out of the reach of children and cover it to provide protection.

TORO SERVICE SUPPORT

If your unit requires service or maintenance, your nearest TORO Master Service Dealer is the best dealer to assist you. Refer to the "Yellow Pages" of your local telephone directory in the section titled "Lawn Mowers." TORO Master Service Dealers are listed under the TORO trademark.

PRODUCT IDENTIFICATION

A model and serial number decal is located on the lower tube. Always refer to specific numbers on the decal in correspondence or when replacement parts are needed.


TORO®

The Toro Promise

A One Year Full Residential Use Warranty

The Toro Company warrants this TORO Product for one year against defects in material or workmanship. To receive a replacement or repair, at Toro's option, just return the complete unit, postage prepaid, to the seller or any TORO Electric Service Dealer or the TORO Service Center, 5300 Shoreline Blvd., Mound, MN 55364, along with proof of purchase. This warranty covers product defects only. **It does not cover incidental or consequential damages. Some states do not allow the exclusion or limitation of incidental or consequential damages, so the above limitation may not apply to you.** This warranty gives you specific rights, and you may have other rights which vary from state to state.

COUNTRIES OTHER THAN THE UNITED STATES OR CANADA

Customers who have purchased TORO products exported from the United States or Canada should contact their TORO Distributor (Dealer) to obtain guarantee policies for your country, province, or state. If for any reason you are dissatisfied with your Distributor's service or have difficulty obtaining guarantee information, contact the TORO importer. If all other remedies fail, you may contact us at The Toro Company.