FORM NO. 3316-474

TORO®

MODEL NO. 30133 — 490001 & UP

OPERATOR'S MANUAL

32" RECYCLER® CUTTING DECK

PROLINE MID-SIZE MOWERS

TORO
THIS UNIT CONFORMS TO ANSI B71.4–1990

To assure maximum safety, optimum performance, and to gain knowledge of the product, it is essential that you or any other operator of the mower read and understand the contents of this manual before the engine is ever started. Pay particular attention to the SAFETY INSTRUCTIONS highlighted by this symbol –



The safety alert symbol means CAUTION, WARNING or DANGER – personal safety instruction. Failure to comply with the instruction may result in personal injury.

FOREWORD

The 32" Recycler™ cutting deck has advanced concepts in engineering, design and safety; and if maintained properly, will give excellent service.

Since it is a high-quality product, Toro is concerned about the future use of the machine and safety of the user. Therefore, read this manual to familiarize yourself with proper set-up, operation and maintenance instructions. The major sections of the manual are:

1. Safety Instructions
2. Set-up Instructions
3. Before Operating
4. Lubrication
5. Maintenance

Certain information in this manual is emphasized. DANGER, WARNING and CAUTION identify personal safety-related information. IMPORTANT identifies mechanical information demanding special attention. Be sure to read this directive because it deals with the possibility of damaging a part or parts of the machine. NOTE identifies general information worthy of special attention.

TABLE OF CONTENTS

	Page
SAFETY INSTRUCTIONS	2-4
SAFETY AND INSTRUCTION DECALS	4
SPECIFICATIONS	4
LOOSE PARTS	5
SET-UP INSTRUCTIONS	5-6
Install Castor Wheels	5
Mount Carrier Frame to Traction Frame	5
Install Drive Belt	5
BEFORE OPERATING	7
Adjusting Height-of-Cut	7
OPERATING INSTRUCTIONS	7-8
Grass Deflector	7
To Side Discharge or Use Bagging Attachment	7
Operating Tips	8
LUBRICATION MAINTENANCE	8
CUTTING UNIT MAINTENANCE	9-14
Troubleshooting	9
Servicing Bushings in Castor Arms	9
Servicing Castor Wheel and Bearing	10
Checking for Bent Blade	10
Removing Cutter Blade	10
Checking Sail and Sharpening Cutter Blade	11
Correcting Uneven Cutting	11
Replacing Drive Belt	12
Replacing Spindle Pulley	13
Removing Spindle and Bearings from Spindle Housing	13
Installing Spindle and Bearings Into Spindle Housing	13
IDENTIFICATION AND ORDERING	14
THE TORO PROMISE	16

SAFETY INSTRUCTIONS



The safety alert symbol means CAUTION, WARNING or DANGER - "personal safety instruction". Read and under stand the instruction because it has to do with safety. Failure to comply with the instruction may result in personal injury.

Improper use or maintenance of the machine can result in injury or death, to reduce the potential for injury or death, comply with the following safety instructions.

BEFORE OPERATING

1. Read and understand the contents of this Operator's Manual before operating the machine. Become familiar with all controls and know how to stop quickly. A replacement manual is available by sending complete Model and Serial Number to:

The Toro Company
8111 Lyndale Avenue South
Bloomington, Minnesota 55420-1196

© The Toro Company — 1993

SAFETY INSTRUCTIONS

2. Never allow children to operate the machine. Do not allow adults to operate machine without proper instruction. Only trained operators who have read this manual should operate this machine.

3. Never operate the machine when under the influence of drugs or alcohol.

4. Remove all debris or other objects that might be picked up and thrown by the cutter blades. Keep all bystanders away from the mowing area.

5. Do not operate machine unless all shields, guards, covers and safety devices in place. If a shield, guard, safety device or decal is illegible or damaged, repair or replace it before operating machine.

6. Do not operate machine while wearing sandals, tennis shoes, sneakers or shorts. Also, do not wear loose fitting clothing which could get caught in moving parts. Always wear long pants and substantial shoes. Wearing safety glasses, safety shoes and a helmet is advisable and required by some local ordinances and insurance regulations.

7. Start engine only when parking brake is set, PTO (blade) is disengaged and transmission is in neutral.

WHILE OPERATING

8. Do not run the engine in a confined area without adequate ventilation. Exhaust fumes are hazardous and could possibly be deadly.

9. Using the machine demands attention, and to prevent loss of control:

A. Mow only in daylight or when there is good artificial light.

B. Watch for holes or other hidden hazards.

C. Do not drive close to a sand trap, ditch, creek or other hazard.

D. Reduce speed when making sharp turns.

E. Avoid sudden starts and stops.

F. Cut slopes carefully. Do not start, stop, or turn suddenly on hillsides.

G. Before backing up, look to the rear and assure no one is behind the machine.

H. Watch out for traffic when near or crossing roads. Always yield the right-of -way.

10. Do not operate unless grass deflector, Recycler® cover or entire grass collector is installed. The grass deflector must always be installed and in lowest position on the side discharge cutting unit. This product is designed to drive objects into the ground where they lose energy quickly in grassy areas. **However, don't take an injury risk!!** When a person or pet appears unexpectedly in or near the mowing area, **STOP MOWING.** Careless operation, combined with terrain angles, ricochets, or improperly positioned guards, can lead to thrown object injuries. Do not resume mowing until area is cleared.

11. Never raise the cutting unit or change height-of-cut while the blade(s) are rotating.

12. If the cutting blade(s) strike a solid object or the machine vibrates abnormally, shut the engine off. Remove spark plug wire(s) to prevent accidental starting. Check cutting unit and traction unit for damage and malfunctioning parts. Repair any damage before restarting the engine and operating the cutting unit. Be sure blade(s) are in good condition and blade bolts are tightened to specification.

13. Do not touch engine or muffler while engine is running or soon after it is stopped. These areas could be hot enough to cause a burn.

MAINTENANCE

14. Remove key from ignition switch and disconnect spark plug wire(s) to prevent accidental starting of the engine when servicing, adjusting or storing the machine.

15. Perform only those maintenance instructions described in this manual. If major repairs are ever needed or assistance is desired, contact an Authorized TORO Distributor.

16. To reduce potential fire hazard, keep the engine free of excessive grease, grass, leaves and accumulations of dirt.

17. Be sure machine is in safe operating condition by keeping nuts, bolts and screws tight. Check the blade mounting bolts and nuts frequently to be sure they are tightened to specification.

18. Make sure all hydraulic line connectors are tight, and all hydraulic hoses and lines are in good condition before applying pressure to the system.

19. Keep body and hands away from pin hole leaks in hydraulic lines that eject high pressure hydraulic fluid. Use cardboard or paper to find hydraulic leaks. Hydraulic fluid escaping under pressure can penetrate skin and cause injury. Fluid accidentally injected into the skin must be surgically removed within a few hours by a doctor familiar with this form of injury or gangrene may result.

20. Before disconnecting or performing any work on the hydraulic system, all pressure in system must be relieved by stopping engine and placing hydrostatic traction control in neutral.

21. If the engine must be running to perform a maintenance adjustment, keep hands, feet, clothing and other parts of the body away from the cutting unit blades and other moving parts.

22. Allow engine to cool before storing mower in any enclosure such as a garage or storage shed. Make sure the mower fuel tank is empty if machine is to be stored in excess of 30 days. Do not store mower near any open flame or where gasoline fumes may be

SAFETY INSTRUCTIONS

ignited by a spark. Always store gasoline in a safety-approved, red metal container.

23. At the time of manufacture, the machine conformed to the safety standards in effect. To ensure optimum performance and continued safety conformance of the machine, use genuine TORO replacement parts and accessories. Replacement parts and accessories made by other manufacturers may result in non-conformance with safety standards and could void the warranty.

SAFETY AND INSTRUCTION DECALS



The following decals are installed on the machine. If any become damaged or illegible, replace it. The decal part number is listed in your parts catalog. Replacement can be ordered from your Authorized Toro Distributor.



ON RIGHT SIDE OF CUTTING UNIT UNDER DEFLECTOR
(Part No. 66-6380)



ON FRONT OF CUTTING UNIT
(Part No. 66-1340)

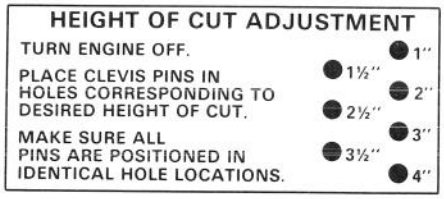

ON LEFT SIDE OF CUTTING UNIT
(Part No. 42-6860)



ON FRONT OF CUTTING UNIT UNDER COVER
(Part No. 67-5360)

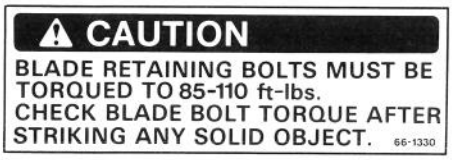

ON LEFT SIDE OF CUTTING UNIT
(Part No. 66-1330)



ON COVER
(Part No. 54-0910)

SPECIFICATIONS

CUTTING UNIT

Width of Cut: 32 in.

Height-of-Cut: Adjustable from 1" to 4" in 1/2" increments.

Cutter Blade: Heat treated steel blade is 31-3/4 in. long.

Semi-Pneumatic Wheels: 6 in. dia. with greaseable roller bearings.

Weight: 130 lb.

LOOSE PARTS

Note: Use this chart as a checklist to assure all parts have been received. Without these parts, total set-up cannot be completed.

DESCRIPTION	QTY.	USE
Flange Screws Flange Locknuts	6 6	Mount carrier frame to traction frame.
Castor Wheel Assembly Thrust Washer Klip Ring Frame	2 6 2 1	Install in frame. Install on castor fork shafts. Install on top of castor shafts. Install on traction unit.
Adjusting Shaft Jam Nuts Washer Spring Bushing	2 4 2 2 2	Mount adjusting shafts.
Operator's Manual Registration Card	1 1	

Specifications and design subject to change without notice.

SET-UP INSTRUCTIONS

INSTALL CASTOR WHEELS

1. Place two thrust washers on each castor wheel shaft (Fig. 1).

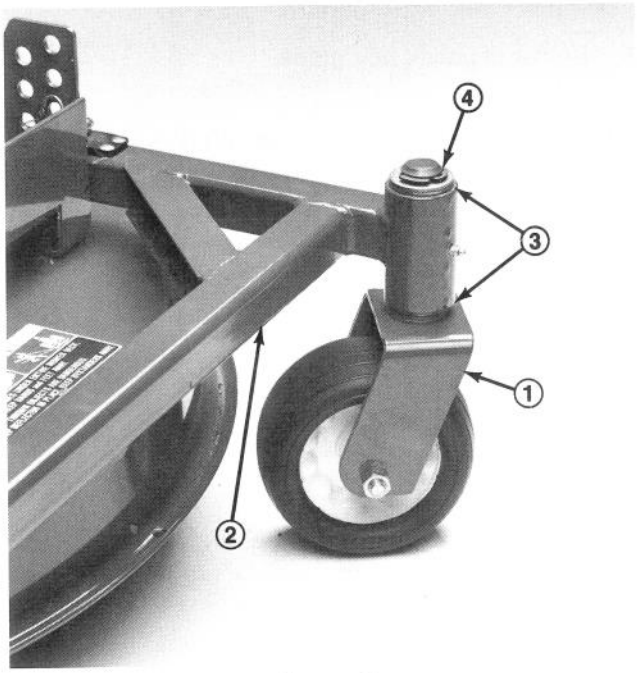

Figure 1

1. Castor wheel assembly
2. Frame
3. Thrust washers
4. Klip ring

2. Insert shafts into carrier frame. Install one or more thrust washer and secure with klip ring (Fig. 1).

MOUNT CARRIER FRAME TO TRACTION FRAME

1. Align carrier frame mounting holes with mounting holes in traction frame. Secure each side with three flange screws and locknuts. (Fig. 2). Torque fasteners to 60-80 ft-lb. (81-109 N·m).

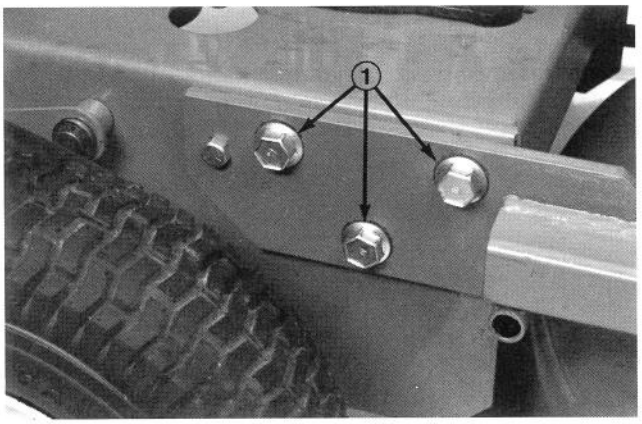

Figure 2

1. Flange screws and nuts

INSTALL DRIVE BELT

1. Loosen knob securing cover to cutting unit (Fig. 3). Remove cover.

SET-UP INSTRUCTIONS



Figure 3

1. Knob & washer
2. Cover

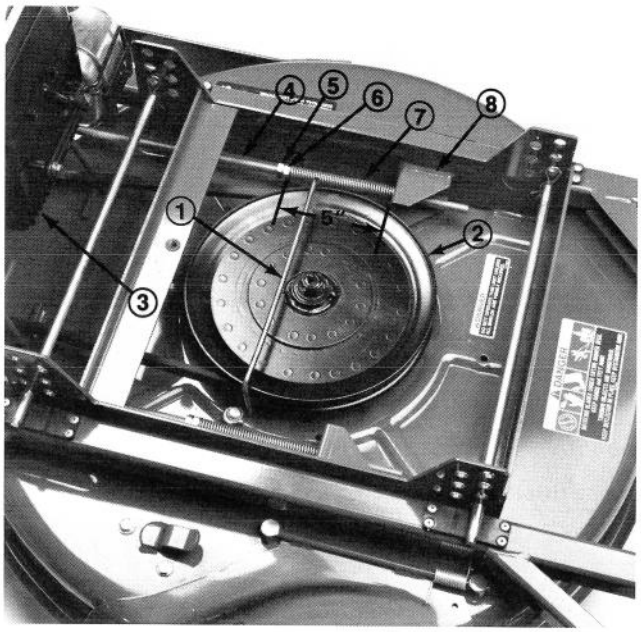

Figure 4

1. Belt guide
2. Deck drive pullley
3. Engine clutch pulley
4. Adjusting shaft
5. Jam nuts
6. Washer
7. Spring
8. Bushing

2. Remove (2) locknuts securing belt guide (over pulley) to mower housing (Fig. 4). Remove belt guide.

3. Route belt around deck drive pulley and engine clutch pulley (Fig. 4).

4. Thread (2) jam nuts onto each adjusting shaft (approximately 7 inches) (Fig. 4).

5. Slide a washer, spring and bushing onto each adjusting shaft. Bushing to be positioned so flange end is against spring (Fig. 4).

6. Insert spring end of each adjusting shaft into hole in deck mounting bracket and other end of shaft into hole in carrier frame mounting tab. Small end of bushing to fit into hole in deck bracket (Fig. 4).

7. To tension belt, tighten front jam nut on each adjusting shaft until springs are compressed to a length of 5", measured between washer and bushing (Fig. 4). Secure rear jam nuts.

8. Reinstall pulley belt guide.

Note: Belt guide must be installed with formed loops to rear so guide is close to pulley (Fig. 4).

9. Reinstall cover.

BEFORE OPERATING

ADJUSTING HEIGHT-OF-CUT

The height-of-cut is adjustable from 1 to 4 inches (25 to 102 mm) in 1/2 inch (13 mm) increments by relocating support rods in different hole locations in brackets at each corner of the cutting unit (Fig. 5). Stop engine before making height-of-cut adjustment.

1. Remove (4) hair pin cotters securing support rods in brackets (Fig. 5).

2. Remove support rods, one at a time, and re-position into desired hole locations.

Note: Both rods should be in identical hole locations to prevent any operating and cutting difficulties.

3. Reinstall hair pin cotters.

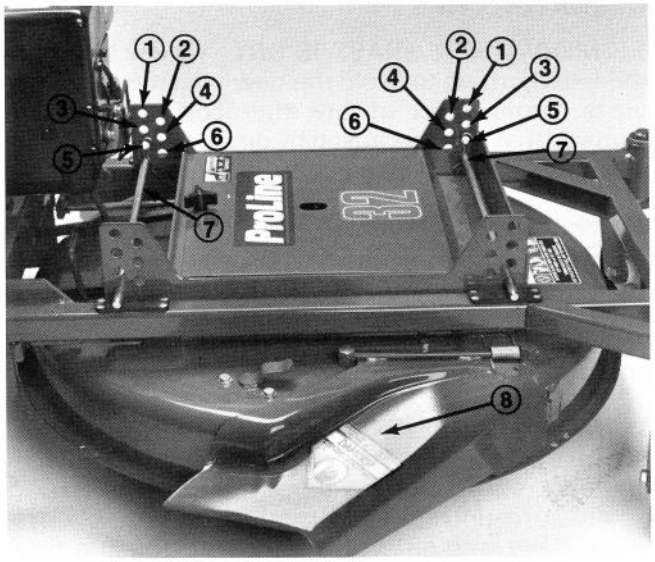

Figure 5

1. 1 in. (25 mm)
2. 1-1/2 in. (38 mm)
3. 2 in. (51 mm)
4. 2-1/2 in. (64 mm)
5. 3 in. (76 mm)
6. 3-1/2 in. (89 mm)
7. 4 in. (102 mm)
8. Grass deflector

OPERATING INSTRUCTIONS

GRASS DEFLECTOR

WARNING

The grass deflector (Fig. 5) is a safety device that diverts grass and other foreign objects being discharged downward. Without deflector mounted in place on the cutting unit and spring loaded hinges holding deflector is down position, the blades could hurl grass and foreign objects out the discharge opening with enough force to cause injury or property damage. If the grass deflector or spring hinges are worn, broken or damaged, repair or replace the affected part(s). Do not operate cutting unit without deflector or entire grass collector mounted on the cutting unit. Always be sure the deflector chute is in the lowest position.

TO SIDE DISCHARGE OR USE BAGGING ATTACHMENT

1. Raise grass deflector (Fig. 5).

2. Remove hinge pin securing front of discharge cover to mower housing.

3. Remove nut and flatwasher securing top of discharge cover to top of mower housing.

4. Remove nut, washer and capscrew securing rear of discharge cover to deck ring.

5. Reinstall nut and flatwasher, previously removed, to top of mower housing.

Note: Retain discharge cover assembly for future reinstallation. Reverse procedure to reinstall cover.

WARNING

NEVER remove the grass deflector (Fig. 5) from the mower housing. If the discharge cover under the grass deflector is removed in order to side discharge or bag, the grass deflector routes discharged material down toward the turf. If the deflector is ever damaged, replace it. Without the deflector, discharge cover or entire grass catcher assembly mounted in place, discharged material could cause personal injury or blade contact could occur.

OPERATING INSTRUCTIONS

OPERATING TIPS

1. MOW WHEN GRASS IS DRY — Mow either in the late morning to avoid the dew which may cause grass clumping, or in late afternoon to avoid the damage that can be caused by direct sunlight on the sensitive, freshly mowed grass.

2. SELECT THE PROPER HEIGHT-OF-CUT SETTING TO SUIT CONDITIONS — Remove approximately one inch or no more than one third of the grass blade when cutting. In exceptionally lush and dense grass you may have to raise your height-of-cut setting another notch.

3. MOWING IN EXTREME CONDITIONS — Air is required to recut grass clippings in mower housing, so do not set height-of-cut too low or totally surround housing by uncut grass. Always try to have one side of the mower housing free from uncut grass, allowing air to be drawn into housing. When making an initial cut thru center of uncut area, operate machine slower and stop forward travel, which allows mower to clear itself, if it starts to clog.

4. STOPPING — If forward motion has to be stopped while cutting, a clump of grass clippings may be deposited on lawn. Follow this procedure for stopping while cutting:

A. With deck engaged, move onto a previously cut area.

B. Raise deck slightly, while driving forward.

C. Shift to neutral, move throttle control lever to slow position, and rotate ignition key to off.

5. MOW AT PROPER INTERVALS — Under most normal conditions you'll need to mow approximately every 4-5 days. But remember, grass grows at different rates at different times. This means that in order to maintain the same height-of-cut, which is good practice, you'll need to cut more frequently in early spring, perhaps every 4 or 5 days; as the grass growth rate slows in mid summer, only every 8-10 days. If you are unable to mow for an extended period due to weather conditions, or other reasons, mow first with the height-of-cut at a high level; then mow again 2-3 days later with a lower height setting.

6. ALWAYS MOW WITH SHARP BLADES — A sharp blade cuts cleanly and without tearing or shredding the grass blades like a dull blade. Tearing and shredding will cause the grass to turn brown at the edges which will impair growth and increase susceptibility to diseases.

7. AFTER OPERATING — To assure optimum performance, clean underside of mower housing, especially around kickers after each use. If residue is allowed to build up in mower housing and around kickers, recycler performance will decrease.

LUBRICATION MAINTENANCE

GREASE BEARINGS AND BUSHINGS

The cutting unit must be lubricated regularly. If machine is operated under normal conditions, lubricate with No. 2 general purpose lithium grease or molybdenum base grease, after every 8 hours of operation or daily, whichever comes first. All other bearings and bushings must be lubricated after every 50 hours of operation.

1. Lubrication points are: caster spindle bushings (Fig. 6); castor wheel bearings (Fig. 6), and blade spindle bearings (Fig. 6).

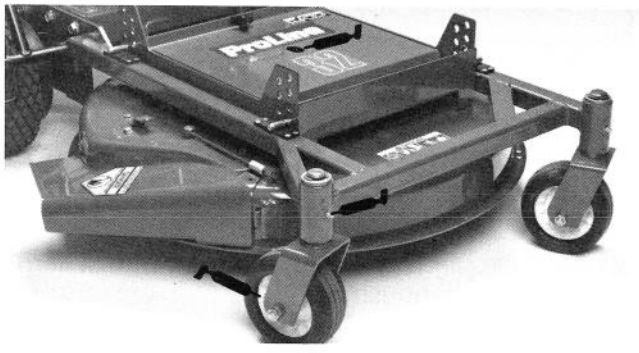

Figure 6

CUTTING UNIT MAINTENANCE TROUBLESHOOTING

UNIT WILL NOT CUT OR CUTS POORLY

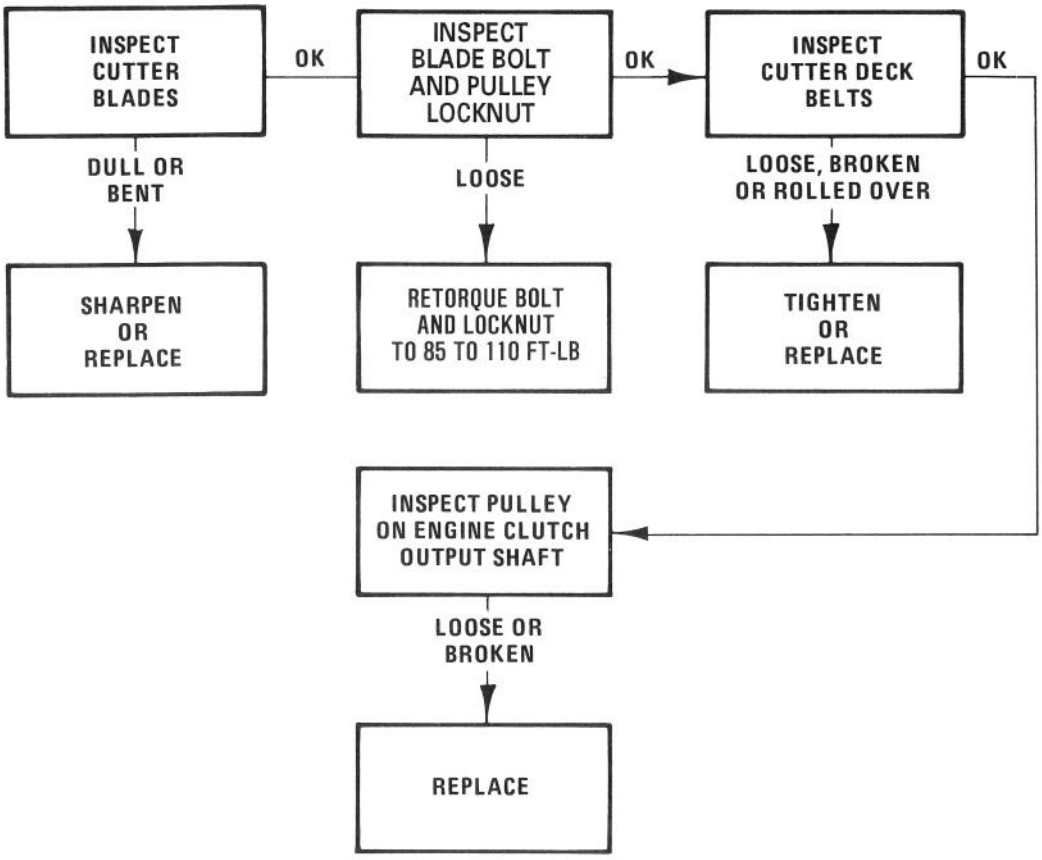

CUTTING UNIT MAINTENANCE

SERVICING BUSHINGS IN CASTOR ARMS

The castor arms have bushings pressed into the top and bottom portion of the tube and after many hours of operation the bushings will wear. To check the bushings, move castor fork back and forth and from side-to-side. If castor spindle is loose inside the bushings, bushings are worn and must be replaced.

1. Raise cutting unit so wheels are off floor and block it so it cannot fall accidentally.

2. Remove klip ring and thrust washer from top of castor spindle.

3. Pull castor spindle out of mounting tube. Allow thrust washers to remain on bottom of spindle.

4. Insert pin punch into top or bottom of mounting tube and drive bushing out of tube (Fig. 7). Also drive other bushing out of tube. Clean inside of tubes to remove dirt.

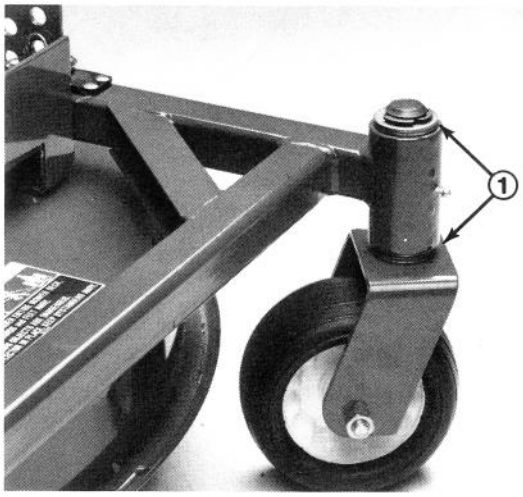

Figure 7

1. Bushings

CUTTING UNIT MAINTENANCE

5. Apply grease to inside and outside of new bushings. Using a hammer and flat plate, drive bushings into mounting tube.

6. Inspect castor spindle for wear and replace it if damaged.

7. Push castor spindle through bushings and mounting tube. Slide spacer onto spindle. Install klip ring on castor spindle to retain all parts in place.

IMPORTANT: When bushings are installed, the inside diameter may collapse slightly, and this may not allow castor spindle to be installed. If castor spindle does not slide through new bushings and mounting tube, ream both bushings to inside diameter of 1.126 inches (28.6 mm).

SERVICING CASTOR WHEEL AND BEARING

The castor wheel rotates on a high-quality roller bearing and is supported by a spanner bushing. Even after many hours of use, provided that the bearing was kept well-lubricated, bearing wear will be minimal. However, failure to keep the bearing lubricated will cause rapid wear. A wobbly castor wheel usually indicates a worn bearing.

1. Remove locknut from capscrew holding castor wheel assembly between castor fork (Fig. 8). Grasp castor wheel and slide capscrew out of fork.

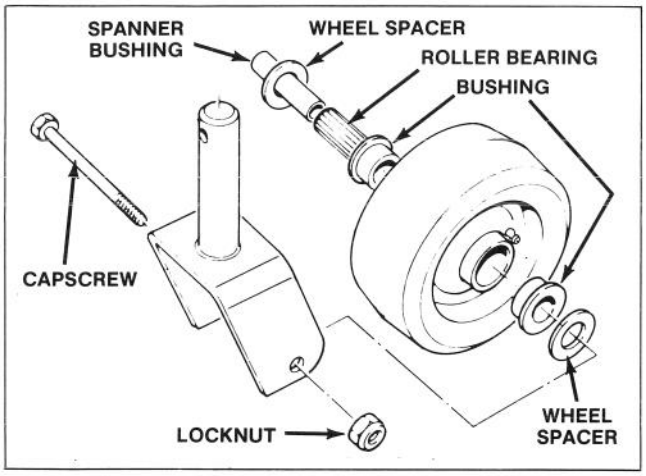

Figure 8

Note: Account for the two wheel spacers (Fig. 8).

2. Remove bushings from wheel hub.

3. Tip wheel to the side and allow roller bearing and spanner bushing to fall out (Fig. 8) (Clean grease and dirt from wheel hub).

4. Inspect bearing and spanner bushing for wear. Replace worn, unusable parts.

5. Press (1) new bushing into wheel hub.

6. To reassemble parts, slide spanner bushing through roller bearing. Pack bearing with no. 2 grease; then insert bearing w/spanner bushing into wheel bushings.

7. Press other new bushing into wheel hub.

8. Slide wheel spacers onto each side of spanner bushing, and mount castor wheel assembly between the fork and install the capscrew and locknut. Tighten capscrew and locknut until spanner bushing bottoms against inside of castor fork.

9. Pump more grease through grease fitting on wheel (Fig. 8). until bearing is greased thoroughly.

CHECKING FOR BENT BLADE

1. Rotate blade until the ends face forward and backward (Fig. 9). Measure from inside of cutting unit to cutting edge at front of blade (Fig. 9), and remember this dimension.

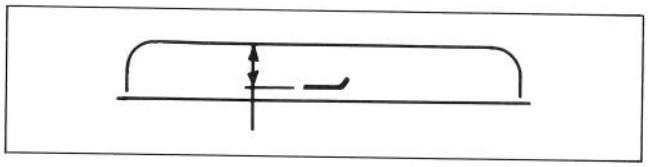

Figure 9

2. Rotate opposite end of blade forward. Measure between the cutting unit and cutting edge of blade at the same position as in step 1. The difference between dimensions obtained in steps 1 and 2 must not exceed 1/8 of an inch (3 mm). If dimension exceeds 1/8 of an inch (3 mm), replace the blade because it is bent: refer to Removing Cutter Blade, page 10.

REMOVING CUTTER BLADE

The blade must be replaced if a solid object is hit, the blade is out-of-balance or if the blade is bent. Always use genuine TORO replacement blades to be sure of safety and optimum performance. Never use replacement blades made by other manufacturers because they could be dangerous.

WARNING

Do not try to straighten a blade that is bent, and never weld a broken or cracked blade. Always use a new blade to assure safety.

1. Grasp end of blade using a rag or thickly padded glove. Remove bladebolt, lockwasher, anti-scalp cup, blade and spacer from spindle shaft (Fig. 16).

2. Install spacer and blade — sail facing toward cutting unit with anti-scalp cup, lockwasher and bladebolt. Tighten to 85-110 ft-lb.

CUTTING UNIT MAINTENANCE

CHECKING SAIL AND SHARPENING CUTTER BLADE

Two areas must be considered when checking and servicing the cutter blade: one area is the sail, the other is the cutting edge. Both cutting edges and the sail, which is the turned up metal opposite the cutting edge, contribute to a good quality-of-cut. The sail is important because it pulls grass up straight, thereby producing an even cut. However, the sail will gradually wear down during operation, and this condition is normal. As the sail wears down, the quality-of-cut will degrade somewhat, although the cutting edges are sharp. The cutting edges of the blade must be sharp so the grass is cut rather than torn. A dull cutting edge is evident when tips of the grass appear brown and shredded. Sharpen the cutting edges to correct this condition.

1. Examine cutting ends of the blade carefully, especially where the flat and curved parts of the blade meet (Fig. 10-1). Since sand and abrasive material can wear away the metal that connects the flat and curved parts of the blade, check the blade before using the mower. If wear is noticed (Fig. 10-2), replace the blade.

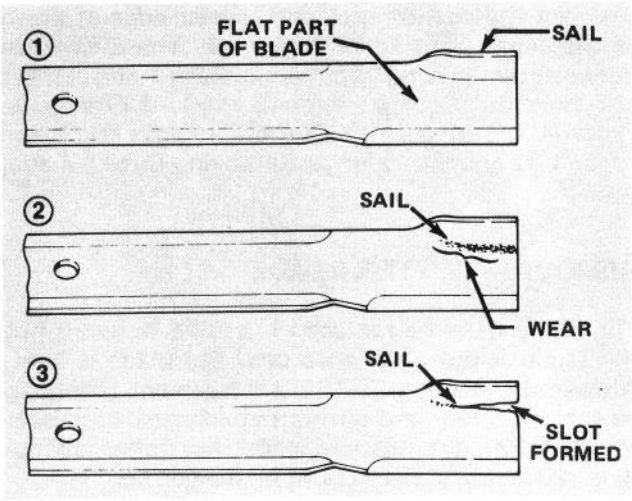

Figure 10

DANGER

If blade is allowed to wear, a slot will form between the sail and flat part of the blade (Fig. 10-3). Eventually a piece of the blade may break off and be thrown from under the housing, possibly resulting in serious injury to yourself or bystanders.

2. Inspect cutting edges of blade. Sharpen the cutting edges if they are dull or nicked. Sharpen only the top of the cutting edge and maintain the original cutting angle to make sure of sharpness (Fig. 11). The blade will remain balanced if same amount of metal is removed from both cutting edges.

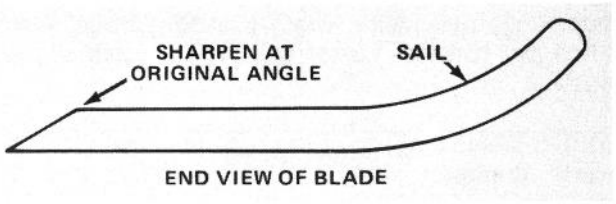

Figure 11

Note: Remove the blade and sharpen on a grinder: refer to Removing Cutter Blade, steps 1 and 2, page 9. After sharpening the cutting edges, reinstall blade with anti-scalp cup, lockwasher and bladebolt. Blade sails must be on top of blade. Tighten to 85-110 ft-lb.

CORRECTING UNEVEN CUTTING

If cutting deck does not cut even, check and correct as follows:

1. Park mower on a level surface and engage parking brake. Turn PTO switch OFF, turn engine OFF and disconnect spark plug wire(s).

2. Adjust tire pressure in all tires to specifications and check that blade(s) are not bent: refer to Checking for Bent Blade.

3. Place height-of-cut to the 2-1/2 in. position: refer to Adjusting Height-Of-Cut. Make sure height-of-cut pins are resting on frame cushions.

Front-to-Rear Pitch

1. Position blade(s) front-to-rear (Fig. 12). Measure at "C" and "D" locations (Fig. 12), from level surface to the cutting edge of blade(s) (Fig.13).

2. Measurement should be 1/8 in. – 5/8 in. lower in front "C" than rear "D".

3. To change front-to-rear pitch move equal number of thrust washers on both front castor shafts. Move thrust washers from top to bottom to raise, or bottom to top to lower pitch (Fig. 14).

CUTTING UNIT MAINTENANCE

4. Check side-to-side level of cutting unit.

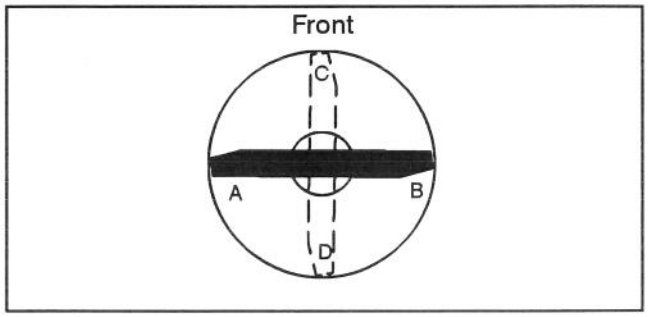

Figure 12

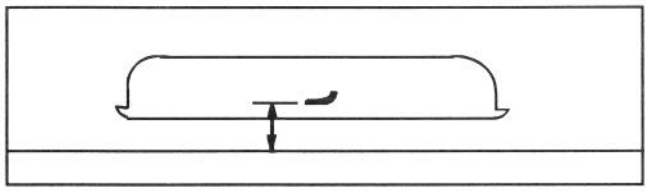

Figure 13

Side-to-Side Leveling

1. Position blade(s) side-to-side (Fig. 12). Measure at "A" and "B" locations (Fig. 12), from level surface to the cutting edge of blade(s) (Fig.13).

2. The difference. between measurements "A" and "B" should be no more than1/4 in.

3. To change side-to-side leveling move thrust washers on one front castor shaft only. Move thrust washers from top to bottom to raise, or bottom to top to lower (Fig. 14).

4. Re-check front-to-rear pitch of cutting unit.

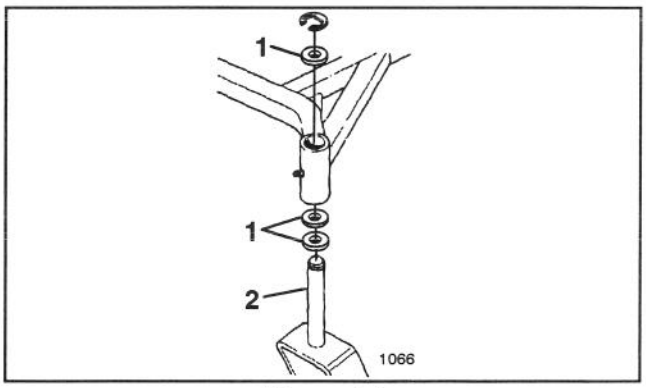

Figure 14

1. **Thrust washers (locate as required)**
2. **Castor shaft**

NOTE: If you are unable to adjust front-to-rear pitch or side-to-side leveling with thrust washers on front castor shaft(s) check blade location in deck. Measure at "A, B, C, D" (Fig. 12) from cutting edge of blade to inside of deck (Fig. 9). Difference between measurements must not exceed 1/8 in. Use Part No. 3256-24 between spindle housing and bottom of cutting deck deck.

REPLACING DRIVE BELT

The blade drive belt is very durable. However, after many hours of use, the belt will show signs of wear. Signs of a worn belt are: squealing when belt is rotating, blade slipping when cutting grass, frayed edges, burn marks and cracks. Replace the belt if any of these conditions are evident.

1. Loosen knob securing cover to top of cutting unit. Remove cover.

2. Remove lock nuts securing pulley belt guide to mower housing and remove guide.

3. Loosen jam nuts on each adjusting shaft and remove blade drive belt (Fig. 15).

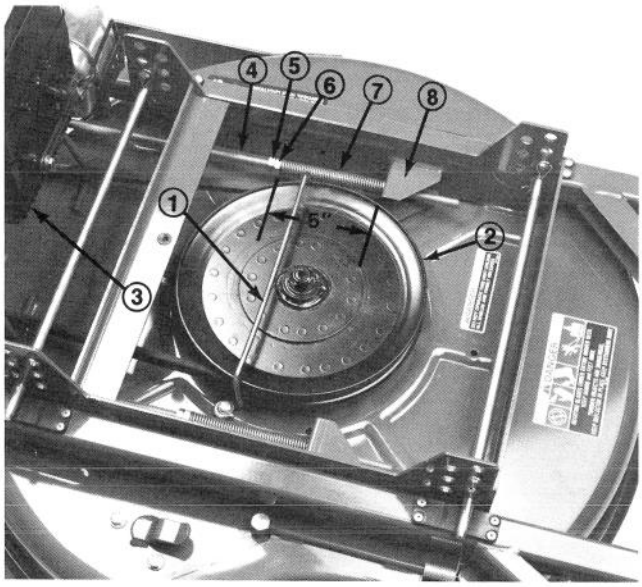

Figure 15

1. Belt guide
2. Deck drive pullley
3. Engine clutch pulley
4. Adjusting shaft
5. Jam nuts
6. Washer
7. Spring
8. Bushing

4. Install new belt around spindle pulley and engine pulley (Fig. 15).

5. Tighten jam nuts on adjusting shafts until springs are compressed to a length of 5", measured between washer and bushing.

6. Reinstall pulley belt guide and tighten lock nuts.

Note: Belt guide must be installed with formed loops to rear so guide is close to pulley (Fig. 4).

7. Reinstall cover.

CUTTING UNIT MAINTENANCE

REPLACING SPINDLE PULLEY

1. Loosen knob securing cover to cutting unit. Remove cover.

2. Remove drive belt, refer to Replacing Drive Belt, page 12.

3. Remove nut and flatwasher retaining pulley on spindle shaft (Fig. 15). Pull pulley off shaft.

4. Check splines on inside of pulley. If splines are damaged, replace the pulley. When installing a new pulley, check the splines on end of spindle shaft. Splines on the spindle shaft must not be damaged. If splines are damaged, the spindle shaft must be replaced before a new pulley is installed.

5. Install new pulley on spindle shaft with flatwasher and locknut. Tighten nut to 85-110 ft-lb. Periodically check to maintain proper torque.

6. Install belt, pulley belt guide, and cover.

REMOVING SPINDLE AND BEARINGS FROM SPINDLE HOUSING

1. Loosen knob securing cover to cutting unit.

2. Remove spindle pulley, refer to Replacing Spindle Pulley, page 13.

3. Remove eight bolts and nuts holding spindle housing assembly to cutting unit (Fig. 19). Slide spindle housing assembly out bottom of cutting unit.

4. If spindle shaft will be replaced, remove bladebolt, lockwasher, anti-scalp cup, blade and spacer from spindle shaft (Fig. 16). Otherwise, the blade and its other associated parts may be left on the spindle shaft.

5. Press bearing (Fig. 16) out of one end of spindle housing, remove spacer, then remove bearing from other end of spindle housing.

INSTALLING SPINDLE AND BEARINGS INTO SPINDLE HOUSING

IMPORTANT: If a new spindle housing is being used, new bearings must be installed: refer to step 1. Never use old bearings with a new spindle housing. By contrast, use only new bearings when installing bearings into a used spindle housing. When pressing in bearings, make sure equal pressure is applied to inner and outer races of bearing.

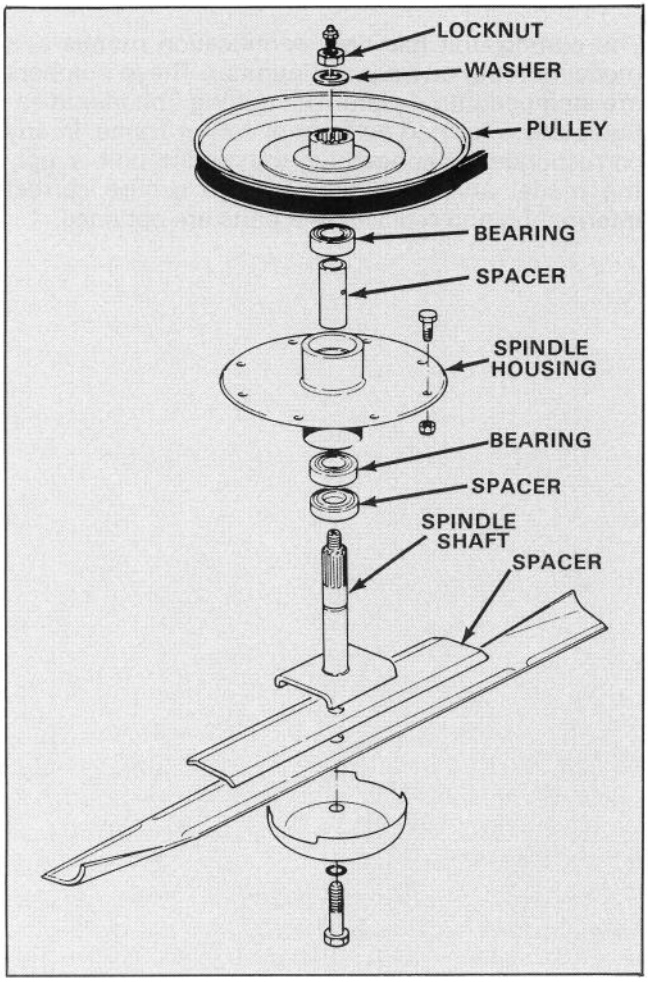

Figure 16

1. Press the top bearing into spindle housing first.

2. Insert the spacer into spindle housing. Replace spacer if worn on ends.

3. Press the bottom bearing into spindle housing.

4. Reinstall spindle housing to cutting unit with eight bolts and nuts.

5. Check spindle shaft, make sure it is free of burrs and nicks and thoroughly lubricate shaft.

6. Slide bearing spacer onto spindle shaft. Carefully slide spindle shaft through spindle housing.

7. Push pulley onto splines of spindle shaft, and retain parts together with large flatwasher and nut. Tighten nut to 85-110 ft-lb and rotate spindle shaft to be sure shaft rotates freely.

8. Reinstall belt and adjust.

9. Reinstall belt guide.

10. Reinstall cover.

IDENTIFICATION AND ORDERING

MODEL AND SERIAL NUMBERS

The cutting unit has two identification numbers: a model number and a serial number. These numbers are stamped into a plate. The cutting unit identification plate is located on front of carrier frame. In any correspondence concerning the cutting unit, supply the model and serial numbers to assure correct information and replacement parts are obtained.

To order replacement parts from an authorized TORO Distributor, supply the following information:

1. Model and serial numbers of the cutting unit.

2. Part number, description and quantity of parts desired.

Note: Do not order by reference number if a parts catalog is being used; use the part number.

MAINTENANCE RECORD

Date	Hours Used							

ProLine Products

THE TORO TOTAL COVERAGE GUARANTEE

A One Year Limited Warranty
(A Full Two–Year Warranty for Residential Use)

What Is Covered By This Express Warranty?

The Toro Company promises to repair any TORO ProLine product used for commercial, institutional, or rental purposes if defective in materials or workmanship for a period of one year from the date of purchase. The cost of parts and labor are included as well as transportation within a 15 mile radius of a TORO ProLine Service Dealer.

What Products Are Covered By This Warranty?

ProLine products covered by this warranty include the ProLine 118, 220, 616, 620, 724 riding products and wide area walk behind mowers and their cutting decks and accessories.

How About Residential Use?

TORO ProLine products used for residential use are covered by a full two–year warranty.

How Do You Get Warranty Service?

Should you feel your TORO ProLine product contains a defect in materials or workmanship, contact the dealer who sold you the product or any TORO ProLine Service Dealer. The Yellow Pages of your telephone directory is a good reference source; look under TORO Commercial Service Dealers. The Service Dealer will either arrange service at his/her dealership or recommend another authorized Service Dealer who may be more convenient. You may need proof of purchase (copy of registration card, sales receipt, etc.) for warranty validation.

If for any reason you are dissatisfied with a Service Dealer's analysis of the defect in materials or workmanship or if you need a referral to a TORO ProLine Service Dealer, please feel free to contact us at the following address:

Toro Customer Service Department
8111 Lyndale Avenue South
Bloomington, MN 55420–1196
612–888–8801

What Must You Do To Keep The Warranty In Effect?

You must maintain your TORO Product by following the maintenance procedures described in the operator's manual. Such routine maintenance, whether performed by a dealer or by you, is at your expense.

What Does This Warranty Not Cover? and How Does Your State Law Relate To This Warranty?

There is no other express warranty except as described above. This express warranty does not cover:

- Cost of regular maintenance service or parts, such as filters, fuel, lubricants, tune–up parts, blade sharpening, brake and clutch adjustments.
- Any product or part which has been altered or misused or required replacement or repair due to normal wear, accidents, or lack of proper maintenance.
- Repairs necessary due to improper fuel, contaminants in the fuel system, or failure to properly prepare the fuel system prior to any period of non–use over three months.
- Pickup and delivery charges for distances beyond a 15 mile radius from a TORO ProLine Service Dealer.

All repairs covered by this warranty must be performed by a TORO Service Dealer using Toro approved replacement parts.

Repair by a TORO Service Dealer is your sole remedy under this warranty.

The Toro Company is not liable for indirect, incidental or consequential damages in connection with the use of the TORO Products covered by this warranty, including any cost or expense of providing substitute equipment or service during reasonable periods of malfunction or non–use pending completion of repairs under this warranty. Some states do not allow exclusions of incidental or consequential damages, so the above exclusion may not apply to you.

This warranty gives you specific legal rights, and you may also have other rights which vary from state to state.

COUNTRIES OTHER THAN THE UNITED STATES OR CANADA

Customers who have purchased TORO products exported from the United States or Canada should contact their TORO Distributor (Dealer) to obtain guarantee policies for your country, province, or state. If for any reason you are dissatisfied with your Distributor's service or have difficulty obtaining guarantee information, contact the TORO importer. If all other remedies fail, you may contact us at The Toro Company.