FORM NO. 3316-530

TORO®

MODEL NO. 73362 - 4900001 & UP
73400 - 4900001 & UP
73420 - 4900001 & UP

OPERATOR'S MANUAL

WHEEL HORSE®

300/400 - Series 8-Speed Garden Tractors

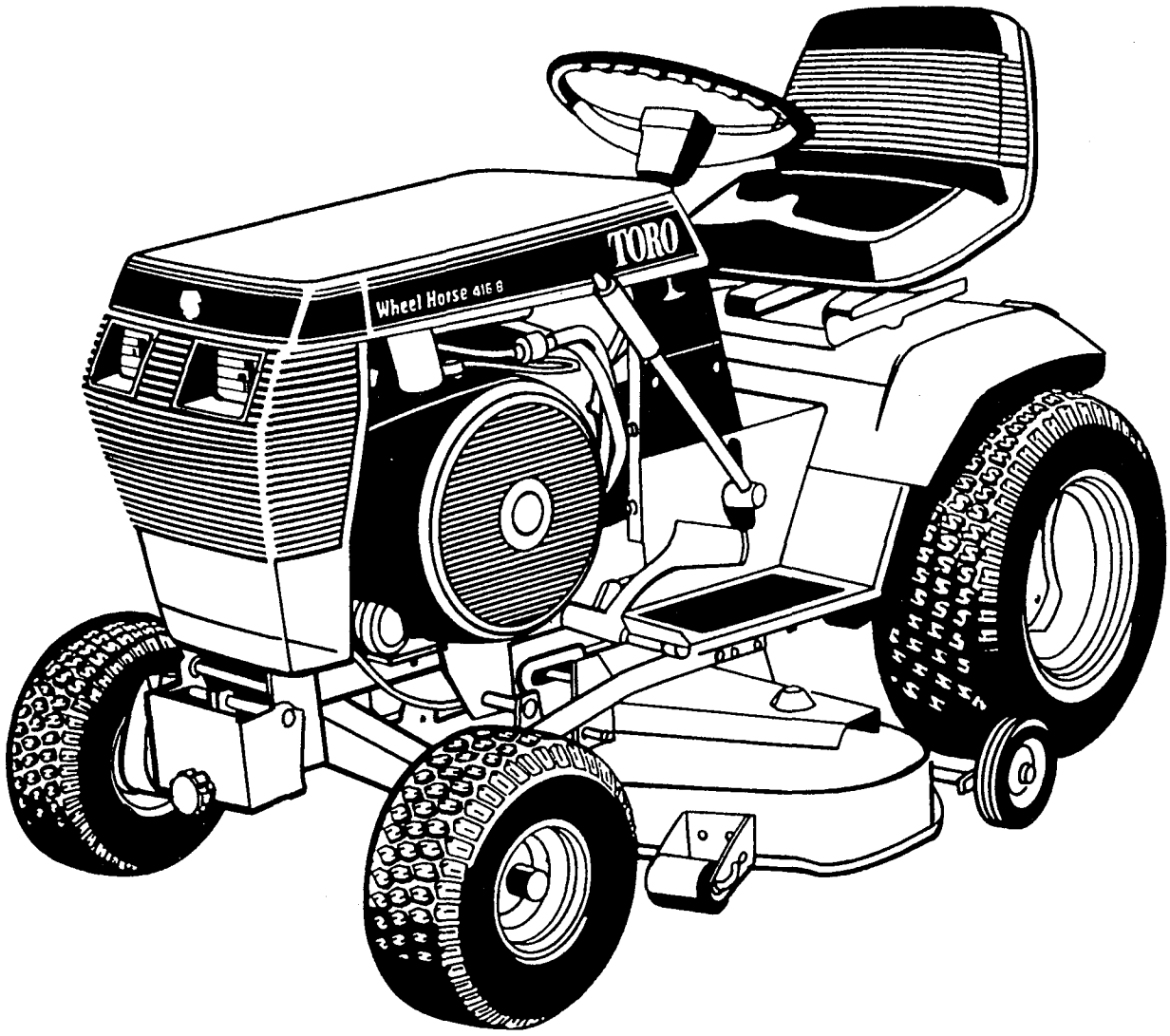

© The TORO Company - 1993

FOR YOUR SAFETY

Two of the most potentially serious types of accidents involving power mowers are contact with the mower blade and overturning the rider/tractor. To minimize the possibility of having these types of accidents, read and follow these instructions. Also refer to the Safe Operation Practice in this Operator's Manual for other important safety information.

RIDER/TRACTOR STABILITY

Vehicle stability changes with conditions and is affected by:

- Slope angle and length/bumps/holes, etc.
- Slippery conditions (lawn moisture and length)
- Operator size and position/how loaded/ equipment used
- Speed/braking/steering changes
- Operator physical limitations/alertness

ALWAYS:

- Use good judgement when operating the rider/ tractor, especially on slopes.
- Maintain the vehicle in good operating condition.
- Be attentive to changing conditions affecting vehicle stability.

NEVER:

- Operate vehicle on extreme slopes.
- Operate vehicle across slopes.
- Abruptly change speed or direction.



LOCATED ON REAR OF HOOD - DECAL PART NUMBER 88-0020

BLADE CONTACT

! DANGER! Mower Blades are Designed to CUT: therefore,

ALWAYS:

- Shut off engine and set parking brake.
- Remove ignition key.
- Allow moving parts to stop before dismounting, servicing, or cleaning unit.

NEVER:

- Perform ANY work on the mower with engine running.
- Mow with other people around, especially children.
- Leave mower unattended.



LOCATED ON FRAME PLATE UNDER STEERING WHEEL
DECAL PART NUMBER 79-0370

TORO • WHEEL HORSE Dealer: Please fill in model and engine identification numbers of vehicle and all attachments at time of sale. Remove "Pocket ID" sticker at right and attach it to the back of your dealership business card. Use ball point pen or permanent marker.

Suggested location for large decal:
- under hood
- back of seat (exc. low back)

OWNER'S NAME_____
The numbers below identify your rider/tractor and attachments and are needed when inquiring about them or ordering parts.

-PLEASE KEEP THIS CARD WITH YOU-

RIDER/TRACTOR_____
ENGINE_____
MOWER_____
OTHER_____
OTHER_____

MODEL & ATTACHMENT IDENTIFICATION NUMBERS
Use when ordering replacement parts
Rider/Tractor#_____ S/N_____
Engine#_____ Spec./Type_____
Mower#_____ S/N_____
Other#_____ S/N_____
Other#_____ S/N_____

BELT & BLADE NUMBERS
Trans. Drive Belt#_____
Mower Drive Belt#_____
Mower Spindle Kit#_____
Mower Blade Kit#_____
Bagger Blade Kit#_____
Lift Tab Kit#_____

MAINTENANCE CHART

MAINTENANCE ITEM	SERVICE INTERVAL
CHECK SAFETY INTERLOCK SYSTEM	BEFORE EACH USE
CHECK ENGINE OIL LEVEL	BEFORE EACH USE
CHECK BATTERY WATER LEVEL	BEFORE EACH USE
CHECK AUTOMATIC TRANS. OIL LEVEL(1)	BEFORE EACH USE
GENERAL EQUIPMENT CONDITION	BEFORE EACH USE
CLEAN ENGINE CHAFF SCREEN	AFTER EACH USE
LUBRICATE DRIVE CHAINS*	EVERY 8 HOURS
CHECK TIRE PRESSURE	EVERY 25 HOURS
CHECK FASTENERS: IN PLACE & TIGHT?	EVERY 25 HOURS
CHECK 8-SPEED TRANS. OIL LEVEL*	EVERY 25 HOURS
CLEAN AIR FILTER/PRECLEANER (2)	EVERY 25 HOURS
LUBRICATE CHASSIS/FRONT WHEELS	EVERY 25 HOURS
LUBRICATE MOWER GAGE WHEELS*	EVERY 25 HOURS
CHANGE ENGINE OIL, B&S and KOHLER	EVERY 25 HOURS
CHANGE ENGINE OIL, ONAN and TORO POWER PLUS	EVERY 50 HOURS
LUBRICATE MOWER SPINDLE(S)	EVERY 50 HOURS
CHECK BRAKE ADJUSTMENT	EVERY 50 HOURS
CLEAN ENGINE EXTERIOR & COOLING FINS	EVERY 50 HOURS
CHANGE AUTOMATIC TRANS. OIL/FILTER*	EVERY 100 HRS/ONCE A YEAR
INSPECT SPARK PLUG(S)	EVERY 100 HOURS
REPLACE ENGINE OIL FILTER	EVERY 100 HOURS
REPLACE AIR FILTER:	
• BRIGGS & STRATTON	EVERY 150-200 HOURS
• ONAN, TORO POWER PLUS	EVERY 200 HOURS
• KOHLER	EVERY 100 HRS/AS NEEDED
REPLACE IN-LINE FUEL FILTER*	ONCE A YEAR

* - As applicable - See maintenance section in operator's manual

NOTE
- See operator's manual for detailed instructions.
- Increase frequency of service under extremely dirty/dusty conditions.
- See engine operator's manual for infrequent maintenance items, such as TAPPET ADJUSTMENT and CYLINDER HEAD CLEANING.

(1) Models with separate transmission & transaxle oil reservoirs - check transmission oil level before each use. Check transaxle oil level every 25 hours.
(2) Models with air filter sensor - service precleaner when indicator light illuminates; replace air filter when service interval becomes noticeably shorter. 88-3200

MAINTENANCE
PART NUMBER 88-3200

DECALS WITH LOCATIONS

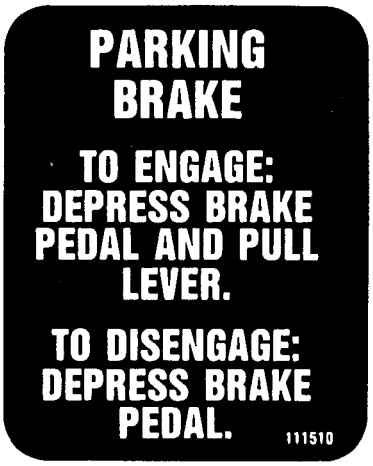

LEFT SIDE ON FRAME PLATE NEXT TO PARKING BRAKE CONTROL - PART NUMBER 111510

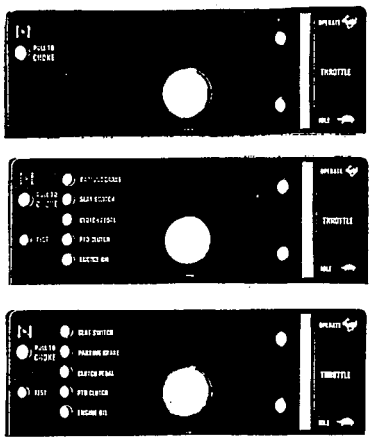

312

314

416

UNDER STEERING WHEEL ON HOODSTAND
312 ONLY - PART NUMBER 79-5810
314 ONLY - PART NUMBER 119190
416 ONLY - PART NUMBER 119200

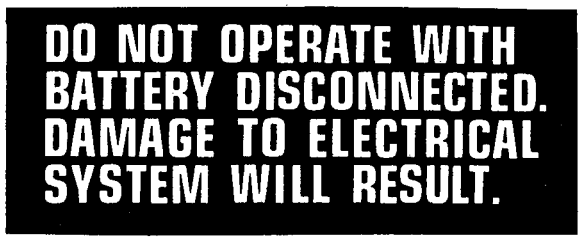

ON INSIDE HOODSTAND NEXT TO BATTERY
PART NUMBER 111926

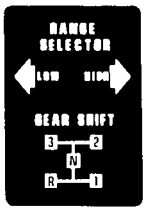

ON RIGHT SIDE OF FRAME PLATE
NEXT TO GEAR SHIFT
PART NUMBER 111534

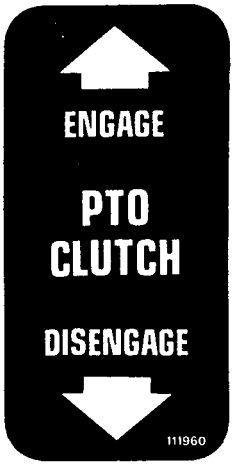

UNDER IGNITION SWITCH ON HOODSTAND
PART NUMBER 111960



ON TOP OF INSTRUMENT PANEL
PART NUMBER 79-2470

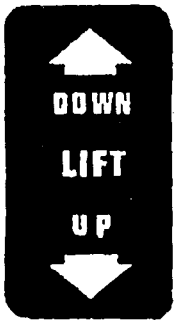

UNDER LIGHT SWITCH ON HOODSTAND
PART NUMBER 112168



ON LEFT AND RIGHT MID-HITCH
PART NUMBER 92-8747



UNI DRIVE
PART NUMBER 92-8749

CONTENTS

	Page
Tractor Specifications	II,III
General Safety Suggestions	IV, V, VI
Model and Serial Number	1
Registration and Warranty	1
Instruments and Controls	2-3
Operating Your Tractor	4-5
Safety Interlock System	4
Seat Control	4
Correct Engine Operation	4
Starting Engine	4
Stopping Engine	5
Throttle and Choke Control	5
Fuel Specification	5
Oil Specification	5
Correct Mechanical Transmission Operation	5
To Go Forward or Reverse	5
To Change Speeds or Direction	5
To Stop	5
Correct Tractor Usage	6-8
Attachment Mounting	6
Hitches	6
Attachment Belts	6
Operation of Tractor	6-8
With a Mower	7
With a Snowthrower	7
(Con't)	
With a Snow, Dozer or Grader Blade	7
With a Tiller	7
With a Plow, Disc Cultivator, or Harrow (314,416 Models)	7-8
With a Rear Bagger	8
With Other Attachments	8
Maintaining Your Tractor	9-15
Maintenance Checklist	9
Engine	9-13
Cooling	9
Oil Quality	9
Oil Level	9
Oil Changes	10
Air Filter	11-12
Crankcase Breather	11
Spark Plug(s)	12
Electronic Ignition	12
Fuel System	12-13
Carburetor Adjustment	12
Charging and Electrical System	13-14
Alternator	13
Main Fuse	13
Light Circuit Fuse	13
Gage Circuit Fuse	13
Battery	13
Light Bulb Replacement	14
8-Speed Transmission	14
Oil Quality	14
Oil Level	14
Chassis Lubrication	14
Foot Brake Adjustment	14
PTO Clutch & Brake Adjustment	15
Exhaust System	15
Cleaning and Storage	15
Trouble Shooting Checklist	16-17
Wiring Diagrams	18-20

These symbols mark important instructions relating to your personal safety. To avoid possibility of injury, read and follow such instructions carefully.

⚠ DANGER ⚠ ***This symbol warns of extreme immediate hazards which would result in high probability of severe personal injury or death if proper precautions are not taken.***

⚠ CAUTION ⚠ ***This symbol warns of a hazard or unsafe practice which can result in personal injury if proper precautions are not taken.***

When manual refers to left or right side of vehicle, it means your left or right when sitting in driver's seat.

SPECIFICATIONS:

ENGINE:

TRACTOR MODEL	ENGINE MODEL*	RATED H.P.**	DISPLACEMENT cu. in./cc	BORE in./mm	STROKE in./mm	IGNITION
312	M12S	10	29.07/476.4	3.38/85.7	3.25/82.6	Electronic
314	M14S	14	31.27/512.5	3.50/88.90	3.25/82.6	Electronic
416	P216	16	43.3/710	3.25/82.6	2.62/66	Electronic

*Letter Prefix: M=Kohler and P=TORO POWER PLUS. Basic engine model number shown; type and serial numbers from engine I.D. plate are required to completely identify engine. **Engine manufacturer's rating at 3600 RPM

TRANSMISSION:

ALL MODELS

Type: Mechanical All Gear

Approximate Ground Speeds (at full throttle):

Gear	Low Range	High Range
1st	.5 mph (.8 kph)	2 mph (3.2 kph)
2nd	.8 mph (1.3 kph)	3.2 mph (5.7 kph)
3rd	1.4 mph (2.2 kph)	5.5 mph (8.8 kph)
Rev.	.7 mph (1.1 kph)	2.6 mph (4.2 kph)

ELECTRICAL SYSTEM:

	312, 314	416
Type:	12 Volt D.C., Negative Ground	12 Volt D.C., Negative Ground
Alternator:	12 Volt, 15 amp. Regulated	12 Volt, 20 amp. Regualted
Battery:	12 Volt, 24 amp hr.,160 CCA	12 Volt, 24 amp hr., 200 CCA

TIRES:

	SIZES - FRONT	SIZES - REAR	PRESSURE - FRONT	PRESSURE - REAR
312	15 x 6.00-6	23 x 8.50-12	12 psi (.85 kg/cm²)	12 psi (.85 kg/cm²)
314	16 x 6.50-6	23 x 9.50-12	12 psi (.85 kg/cm²)	12 psi (.85 kg/cm²)
416	16 x 6.50-6	23 x 9.50-12	12 psi (.85 kg/cm²)	12 psi (.85 kg/cm²)

PHYSICAL DATA:

MODEL	HEIGHT	LENGTH	OVERALL WIDTH	WHEEL BASE	INSIDE TURNING RADIUS	NET WEIGHT (Approximate)
312	40.5 in. (102 cm)	65 in. (165 cm)	36.5 in. (93 cm)	45.5 in. (116 cm)	36 in. (91 cm)	553 lbs. (252 kg)
314	42.5 in. (108 cm)	65 in. (165 cm)	36.5 in. (93 cm)	45.5 in. (116 cm)	36 in. (91 cm)	553 lbs. (252 kg)
416	43.5 in. (111 cm)	65 in. (165 cm)	36.5 in. (93 cm)	45.5 in. (116 cm)	36 in. (91 cm)	566 lbs. (258 kg)

SPECIFICATIONS (continued):

TUNE-UP/GENERAL MAINTENANCE SPECIFICATIONS:

ENGINE:

MACHINE MODEL	POINT GAP in./mm	TIMING MARK LOCATION	IGNITION TIMING (BTDC)	SPARK PLUG TYPE*	SPARK PLUG GAP in./mm	DIRECTION OF ROTATION (Facing Drive Pulley)	IDLE RPM (No Load)	GOVERNED MAX. RPM (No Load)
312, 314	N/A	N/A	Fixed	RH10	.025/.64	Counterclockwise	1000	3400
416	N/A	N/A	Fixed	RS14YC	.025/.64	Counterclockwise	1400	3400

* Or equivalent (Champion number shown)

LUBRICANT/FUEL CAPACITIES:

CRANKCASE:

312, 314 2.5 qts. (2.3 l)

416 1.5 qts. (1.4 l) w/o Filter
1.8 qts. (1.7 l) w/Filter

FUEL TANK:
9 qts. (8.6 l)

CHASSIS:
Grease Fittings : 8

SAFE OPERATION PRACTICES — RIDING VEHICLES

GENERAL

1. This machine is capable of amputating hands and feet and can throw objects that can cause injury and damage. KNOW the controls and how to stop machine quickly. READ THIS OPERATOR'S MANUAL and instructions furnished with attachments. Read, understand, and obey all safety messages appearing on the machine and in the operator's manual. LEARN from your operator's manual and from careful EXPERIENCE how to operate your equipment correctly. Know your machine's limitations.
2. Keep hands, feet, hair and loose clothing away from attachment discharge area, underside of mower deck or any moving parts while engine is running.
3. The use of drugs or alcohol while operating any equipment will place your safety in peril. Do not attempt operation of this machine while taking drugs or medication or while drinking alcoholic beverages.
4. Only responsible persons with mature judgment and proper physical capabilities should be allowed to operate this machine, and only after instruction in the proper use of this equipment.
5. Do not allow children to operate machine.
6. Do not carry passengers.
7. The purpose of this machine is to perform work. This equipment is not intended for sport or recreation.
8. Do not mow when people or pets are around.
9. Clear work area of objects (wire, rocks, etc.) which might be picked up and thrown.
10. Take all possible precautions when leaving vehicle unattended, such as disengaging power-take-off, lowering attachments, shifting into neutral, setting parking brake, stopping engine and removing key.
11. Watch out for traffic when crossing or near roadways.
12. Machine and attachments should be stopped and inspected for damage after striking a foreign object. Damage should be repaired before restarting and operating equipment.
13. Do not change engine governor settings or overspeed engine.
14. Wear appropriate protective clothing when operating equipment. Long pants and substantial footwear, not barefoot or open sandals, are essential.
15. Do not operate equipment unless properly seated with feet on footrests or pedals.
16. Keep your eyes and mind on your machine, attachment and the working area. Do not let other interests distract you.
17. Safety switch(es) are intended to stop or prevent starting of engine to help prevent accidents. OPERATOR SHOULD TAKE PRECAUTIONS AND NOT RELY ENTIRELY ON SAFETY SWITCH(ES).
18. Care should be used not to touch equipment or attachment parts which may be hot from operation. Muffler and nearby areas may exceed 150° F. Allow cooling to occur before attempting to maintain, adjust or service.
19. Use of stereo headphones, ear protection or other sound altering/dampening devices may limit your ability to hear warning sounds (horns, shouts, etc.).

FUEL/FIRE PRECAUTIONS

20. Handle gasoline with care — it is highly flammable.
21. Use approved gasoline container. Place container out of reach of children.
22. Use gasoline only as a fuel — never as a cleaner.
23. Never remove fuel cap or add gasoline to a running or hot engine, or an engine that has not been allowed to cool for several minutes after running.
24. Never fill fuel tank indoors. Wipe up spilled gasoline.
25. Open doors if engine is run in garage — exhaust fumes are dangerous. Do not run engine indoors.
26. Do not fill machine with gasoline while smoking or when near open flame or sparks.
27. Never store equipment with gasoline in the tank inside a building where fumes may reach an open flame or spark.
28. Allow engine to cool before storing in any enclosure.
29. To reduce fire hazard, keep engine and attachments free of grass, leaves or excessive grease.
30. Battery acid is a poison and can cause burns. Avoid contact with skin, eyes and clothes and protect your face, eyes and clothing when working around the battery.
31. Battery gases can explode. Keep cigarettes, sparks and flames away from battery.

EQUIPMENT USE AND OPERATION

32. It is recommended that first operation of equipment be done at a slow speed with attachment disengaged. Continue this practice until operator is thoroughly familiar with the controls and has developed operating skills.
33. Disengage all attachment clutches, set parking brake and shift into neutral before attempting to start engine.
34. Disengage power to attachment(s), set parking brake and stop engine before leaving operator position.
35. Disengage power to attachment(s) and stop engine before making any repairs or adjustments.
36. Disengage power to attachment(s) when transporting or not in use.
37. Disengage attachment clutch before attempting to remove the mower from a hole or other obstruction.
38. Disengage power to attachment(s) before backing. Do not mow in reverse unless absolutely necessary and then only after careful observation of the entire area behind the machine.
39. LOOK behind machine to make sure the area is clear before placing the transmission in reverse and continue looking behind while backing.
40. Always back up loading ramps and tilt bed trailers.

41. The parking brake is designed to hold tractor in place at rest, with engine off. Parking brake **will not** restrain tractor with engine running and transmission engaged.

STABILITY / TIPOVER / TRACTION

42. Know the terrain on which you are operating your equipment. There are areas on which your equipment can not be safely operated.
43. Avoid operating equipment on hillsides, slopes or rough terrain. DO NOT operate machine on hillsides or slopes exceeding 15° (27% grade). If safety is in doubt — **STAY OFF THE SLOPE.**
44. Reduce speed and exercise extreme caution on slopes above 10° (18% grade) to prevent tipping or loss of control. Never mow uphill on these slopes — mow downhill only. If a steep hill must be ascended, back up the hill, and drive forward down the hill, keeping tractor in gear. If necessary to turn on hill, always turn downhill.
45. Mow up and down the face of slopes greater than 5° (9% grade), never across the face. Be especially cautious when changing directions on all slopes.
46. Operate your machine smoothly and at a ground speed slow enough to insure complete control at all times. Avoid erratic operation and excessive speed.
47. Sharp turns on any terrain may cause loss of control. Reduce speed and use caution when making sharp turns.
48. Do not stop or start suddenly when going uphill or downhill. Avoid uphill starts. If machine is stopped going up a slope, turn the attachment off and back slowly down the slope keeping the machine in gear. Do not stop or change gears (speed) on slopes.
49. Know the terrain on which you are working. Find hidden obstacles by walking through and inspecting the area prior to operating your equipment in that area. Plainly mark obstacles, such as rocks, ruts or holes and **stay well clear of these obstacles** when operating.
50. While operating, stay alert for holes, rocks or roots, which may cause damage to equipment or upset. Keep at least 3 ft. away from drop-offs, ditches, creeks, culverts, washouts and public highways.
51. Exercise care when mowing around a fixed object to prevent the equipment or attachment from striking the object. When mowing never deliberately run over any foreign object.
52. Areas wet with dew, rain or snow will be more slippery than when dry. Areas covered with loose gravel are more slippery than firm dry ground. Greater stopping distances are required in these slippery areas.
53. Learn to expect changes in operating conditions. Adding or removing attachments or weight to your equipment will make your machine perform differently. Rain, snow, loose gravel, wet grass, etc., change the tractive conditions of the terrain requiring changes in your operating technique, which may include a decision not to operate on that terrain.
54. Use care when pulling loads or using heavy equipment.
    A. Use only approved drawbar hitch points.
    B. Limit loads to those you can safely control.
    C. Do not turn sharply. Use care when backing.
    D. Use counterweight(s) or wheel weights when suggested in operator's manual.

ATTACHMENT USE

55. When using attachments never direct discharge of material toward bystanders nor allow anyone near vehicle while in operation.
56. When using machine with mower:
    A. Mow only in daylight or in good artificial light.
    B. Never make a cutting height adjustment while engine is running if operator must dismount to do so.
    C. Shut engine off when unclogging chute.
    D. Check blade mounting bolts for proper tightness at frequent intervals.
57. Keep hands and feet away from rotating blade(s) underneath mower deck. Never place foot on ground when mower is engaged or when mower is in motion.
58. DO NOT operate mower attachment without the chute deflector or complete bagger in place.
59. Exercise care while maneuvering with grass catcher. Front to rear stability may change.
60. When using machine with snowthrower and auger becomes plugged or jammed:
    A. Declutch snowthrower and stop tractor engine immediately.
    B. Disconnect spark plug wire(s).
    C. Clear snow from discharge chute if plugged.
    D. If auger is jammed, remove foreign object and repair any damage to snowthrower before continuing.
    E. Reconnect spark plug wire(s) and resume operation.
61. Never permit anyone to stand near snowthrower auger or discharge opening. Objects may be present in snow, which when thrown, could cause injury.
62. When using snow/dozer blades:
    A. Avoid hitting solid objects. This can damage blade and injure operator.
    B. Always travel at a safe, slow speed.
63. Keep all persons a safe distance away when operating tillers. Always disengage the PTO, lower the attachment and remove the ignition key before making any adjustments.
64. If tiller starts to push tractor, disengage PTO clutch immediately.
65. Use chains, counterweight(s) or wheel weights when suggested in the operator's manual.

MAINTENANCE

66. Keep all nuts, bolts, fasteners and screws tight to be sure equipment is in safe working condition and check them frequently. Repair or replace worn, damaged, distorted or broken parts as needed.

67. Keep vehicle and attachments in good operating condition and keep safety devices in place and working.

68. Under normal usage, grass catcher bag material is subject to deterioration and wear. It should be checked frequently to determine need for bag replacement.

69. Use only genuine Wheel Horse replacement parts to assure that original standards are maintained.

70. Shields, deflectors, switches, blade controls and other safety devices must be in their proper position and functional.

71. Do not operate without muffler or tamper with the exhaust system. Damaged mufflers or spark arresters can create a fire hazard. Periodically inspect and replace if necessary.

72. If equipment begins to vibrate abnormally, disengage power to attachments and stop engine at once. Repair any damage before starting or continuing operation.

73. Periodically inspect all shafts, levers, friction devices and other moving parts subject to wear. Make required adjustment or replace these parts if damaged, distorted or broken, or as soon as wear affects the normal operation of the vehicle or attachment. DO NOT operate equipment that is not functioning properly.

MODEL AND SERIAL NUMBER LOCATIONS

Model and Serial numbers are used to identify your new tractor and major attachments. These numbers should always be referred to when consulting dealer or factory concerning service, parts, or other information you may require.

Tractor identification number plate is located just below seat on rear fender.

Engine identification numbers are located on engine shrouding and indicate model, specification or type number and serial number of tractor's engine.

Major attachments also have an identification number plate attached to them.

For your convenience and ready reference, enter tractor and engine numbers below.

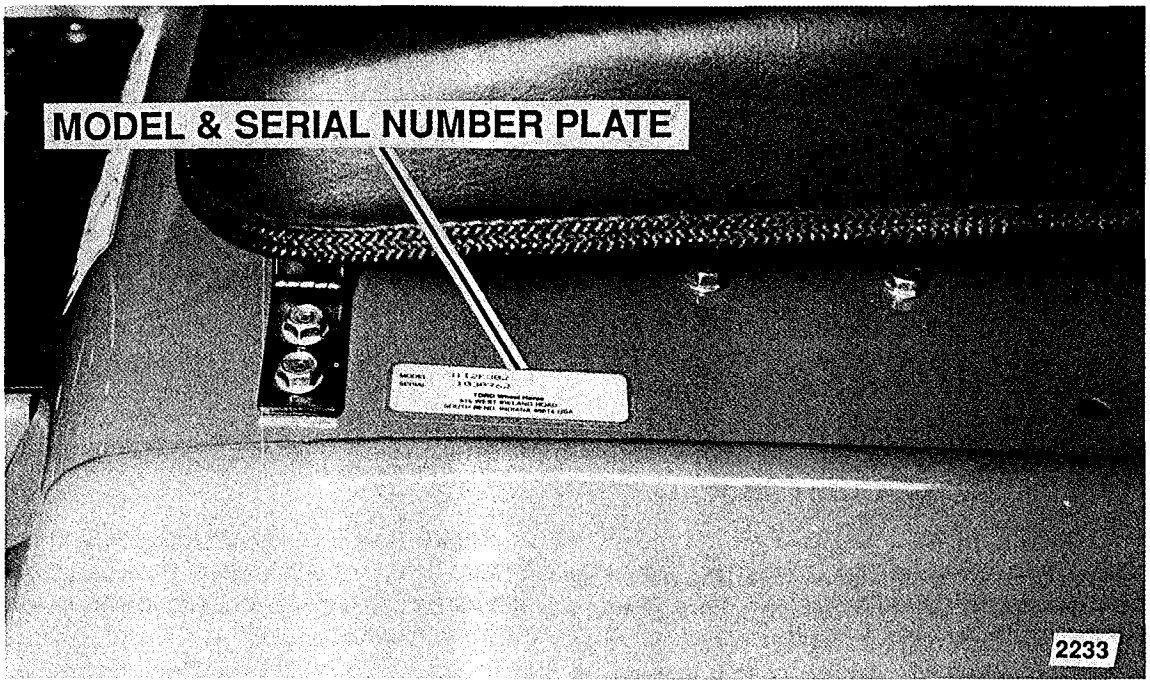

Model and Serial Number Plate Location

Tractor Identification Number

MODEL _____

SERIAL NO._____

Engine Identification Number

Model _____

Type or Spec. No _____

Serial No._____

OWNER REGISTRATION AND WARRANTY

Service and warranty assurance is as important to Toro Wheel Horse as it is to you, the owner. To facilitate warranty service at an Authorized Toro Wheel Horse Dealer, Toro Wheel Horse requires factory registration. A registration card is supplied with each new tractor and attachment. **Either you or your dealer must fill in required information and mail card to Toro Wheel Horse.**

Toro Wheel Horse Limited Warranty Statement is on a "hang tag" attached to each product. This statement describes what items are covered by the Toro Wheel Horse Limited Warranty, your rights and obligations, and procedure to follow to obtain warranty service. Please familiarize yourself with the warranty statement. **All of us at Toro Wheel Horse want you to be satisfied with your Toro Wheel Horse tractor; please don't hesitate to contact us for assistance.**

INSTRUMENTS AND CONTROLS

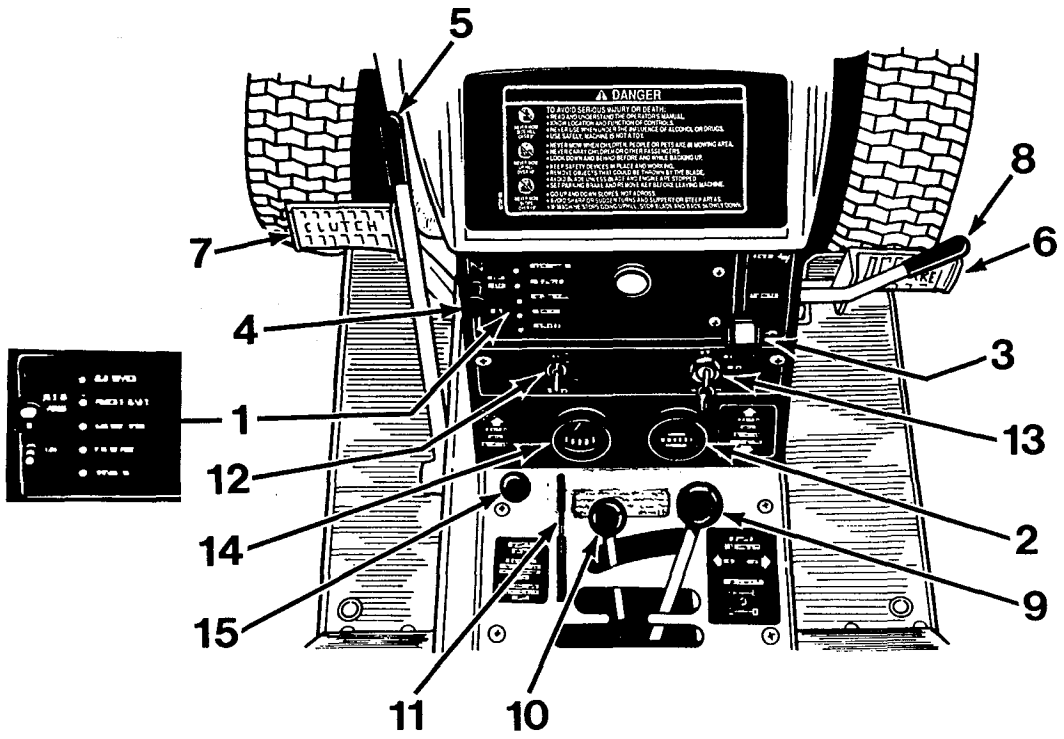

1. INTERLOCK INDICATOR LIGHTS; ENGINE OIL LIGHT - NOT ON 312

Test switch is used to check lights. Push on test switch to turn lights "On" or "Flashing"; if one or more lights are out check wiring and replace circuit board as outlined in "Maintenance" section of this manual. If PTO clutch or clutch pedal light is on when attempting to start engine, check that control is in proper position for starting. All lights must be OFF During operation; if a light is on, a malfunction is indicated in that operation and must be corrected.

2. HOUR METER

Hour meter is a gage indicating operated hours of tractor.

3. THROTTLE CONTROLS

Throttle control lever controls engine speed. Raise lever to operate tractor; Lower lever before shutting engine off.

4. CHOKE CONTROLS

Pull choke knob out when starting engine. Slowly push knob in after engine starts. If engine is warm and has been running, choking may not be necessary to restart it.

5. MANUAL LIFT

Depress lift lever release button and move lever forward or rearward to lower or raise attachments used with tractor. Always lower attachments before leaving tractor unattended

6. BRAKE PEDAL

Pushing down on brake pedal applies brake. Note: When coming to a stop always depress clutch pedal as well as brake pedal so that transmission will be disconnected from engine.

7. CLUTCH PEDAL

Pushing down on clutch pedal does two things: (1) Declutches transmission drive belt from engine; (2) Actuates a safety interlock switch so starter will operate. Engaging clutch is done by releasing pedal which tightens transmission drive belt. Always release pedal slowly when engaging clutch. Always depress pedal when shifting transmission into or out of gear and when starting engine. Indicator light comes on, if so equipped, with pedal released and ignition key in start position.

8. PTO (POWER TAKE-OFF) CLUTCH LEVER

Power driven attachments are engaged and disengaged with PTO lever. Push lever forward to engage attachment. Pull lever back too disengage attachment. PTO clutch lever actuates a safety interlock switch in starter circuit; therefore, indicator light comes on, if so equipped, and tractor will not start unless lever is in disengaged position. If operator's seat is vacated while PTO is engaged, seat switch indicator light comes on, if so equipped; and seat switch will automatically shut of engine.

9. GEAR SHIFT LEVER

Select any forward or reverse speed by moving lever to position as indicated on shift pattern decal.

10. RANGE SELECTOR

Select either high or low range by moving range selector lever right or left to position as indicated on range selector decal. Low range provides a 4 to 1 speed reduction and greater pulling power for moving heavy loads in any forward or reverse speed. Do not use a mid-point position for neutral. Neutral must be selected with gear shift lever.

11.PARKING BRAKE LOCK LEVER

Parking brake lever is located in front of seat on left side of frame. To engage parking brake, first apply foot brake pedal solidly and then move parking brake lock lever back to lock brake. To release parking brake push down on brake pedal. Parking brake lock lever is spring loaded and will return to disengaged position when foot brake is applied. Indicator light is on, if so equipped, when parking brake is locked with engine running.

12. LIGHT SWITCH

Raise toggle to turn lights on. Lower toggle to turn lights off. Lights will work only when ignition switch is in Run position.

13. IGNITION SWITCH

Ignition switch has three positions from left to right: (1) Off, (2) Run, (3) Start. To start engine turn key all the way right to Start positiion. Release key when engine starts and it will automatically return to Run position. When switch is turned to Off position, engine stops and all electrical accessories are turned off.

14. VOLTMETER

Voltmeter is a gage indicating electrical system battery voltage. With ignition key in Off position, gage is not actuated. When ignition key is turned to On position, gage should read 12 Volts or slightly above. When starter is engaged, gauge reading should not drop below 8 Volts. After engine is started and running, gauge should read between 12 and 16 Volts. If gauge reads less than 12 Volts battery is discharging. If gauge reads 16 volts or higher for long periods of time, check battery water more frequently.

15. DIAL-A-Height

Dial-A-Height control is used to hold an attachment (other than a mower) at a desired height above ground. Turn knob left or right to limit forward travel of lift lever. Turn knob all the way left for mower operation.

16. FUEL SHUT-OFF VALVE (Not Shown)

Fuel shut-off valve is located on bottom of fuel tank. Fuel shut-off valve is normally left open, except when service on fuel system becomes necessary.

OPERATING YOUR TRACTOR

SAFETY INTERLOCK SYSTEM

Safety interlock system incorporates two switches for safe starting and a seat switch that shuts off engine when driver raises off seat with PTO engaged.

Starting switches are actuated by left foot pedal and PTO clutch control. If tractor will not start, check that PTO clutch is disengaged and left foot pedal is depressed. Indicator lights will be on (if so equipped) and engine will not start unless both switches are properly actuated.

Safety interlock system must be tested periodically. To test operation, following functions must be observed. If not, immediate repairs must be performed by an Authorized Toro Wheel Horse Dealer for your protection.

1. Engine should NOT start if:
   a. Left foot pedal is released.
   b. PTO is engaged.
   Test each of the above, one at a time.
2. With engine running and PTO engaged, test operate seat switch by raising off seat. Engine should shut off.

SEAT CONTROL

On all models seat location can be changed by loosening seat plate bolts and sliding springs to desired position. Seat on 314 and 416 also slides in tracks; push lever sideways to move seat to desired position.

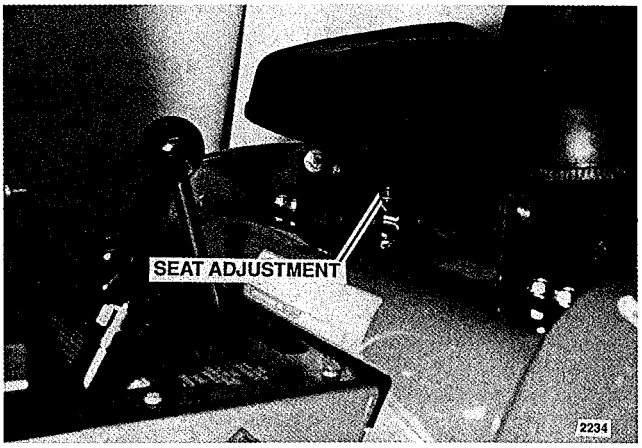

Seat Adjustment - 312

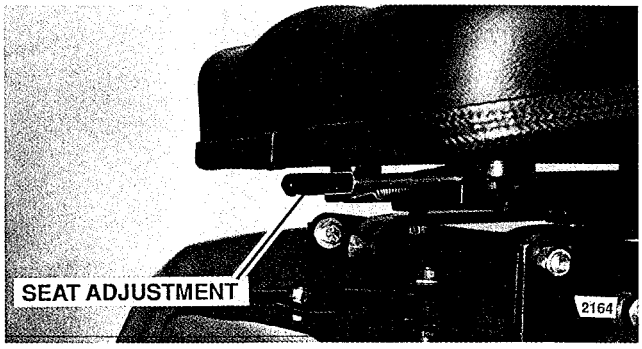

Seat Adjustment - 314 & 416

CORRECT ENGINE OPERATION

⚠ CAUTION ⚠

Before starting engine, become familiar with all controls. Read this Operator's Manual thoroughly. Always check engine oil level before starting.

⚠ DANGER ⚠

Care should be taken to avoid inhaling exhaust gases as they contain carbon monoxide gas which is colorless and odorless. Carbon monoxide is a dangerous gas that can cause unconsciousness and is potentially lethal.

Do not run engine in confined areas such as a closed garage.

STARTING ENGINE

Because of a built-in safety interlock system, your tractor will not start until left foot pedal is depressed and PTO is disengaged. If so equipped, indicator light(s) will be on when controls are not in correct position for starting.

To start engine depress left foot pedal and disengage PTO.

314 Model: Engines are equipped with a low oil safety switch and will not allow engine to start when oil is low or out. Oil indicator light will be on when oil is low or out and key switch is in start position.

312, 314 Model: Move throttle control lever about halfway to Operate position. Pull choke control all the way to Cold position.

416 Model: Move Throttle control to low idle position and pull choke control all the way to Cold position.

⚠ CAUTION ⚠

Mechanical Transmission: Always place transmission gear shift lever in neutral position before attempting to start engine.

Turn ignition key clockwise until starter engages. When engine starts, release key. Switch is spring loaded and will return to Run position automatically.

If engine fails to start after 30 seconds of continuous cranking, turn key to Off position and allow starter motor to cool. Check for cause of hard starting; consult Troubleshooting Checklist.

312,314 Models: Once engine has started, slowly return choke control to Operate position.

416 Model: Once engine has started, raise throttle to halfway position and then return choke to Operate position.

If engine stalls or hesitates during operation, choke should be applied as necessary until engine reaches normal operating temperature.

STOPPING ENGINE

To stop engine, return throttle lever to idle position and turn ignition key to Off position. If engine has been working hard, or is hot, allow engine to idle a short time before turning key off. This practice will help to cool engine before stopping.

Note: In case of emergency, engine may be stopped by turning ignition key to Off position.

Always remove key and set parking brake when leaving tractor unattended, even if for just a few minutes. Prevent accidents, do not give children or unauthorized persons an opportunity to operate this machine.

THROTTLE AND CHOKE CONTROL

Throttle control regulates speed of engine as measured in RPM (Revolutions Per Minute). This control should not be used to regulate ground speed of tractor.

The engine in your new Toro Wheel Horse has been designed with a special governor that limits maximum RPM. The governor allows engine to operate most efficiently at a set speed, and protects it from damage caused by excessive RPM. Always operate tractor with throttle control set at full speed.

Engine MUST be operating at full throttle whenever tractor is in use. Use of tractor while engine is operating at less than full throttle may result in poor overall tractor performance.

Choke control activates a "butterfly" valve in carburetor. When choke is partially or completely closed, less air is admitted to engine. This results in a higher fuel-to-air (richer) mixture that is easier to ignite when engine is started cold. Warmer engines may not need choking.

FUEL SPECIFICATION

⚠ DANGER ⚠

Handle fuel with care - it is highly flammable. Use only approved fuel container. Never add fuel while engine is running. Fill fuel tank outdoors with extreme care. Never fill fuel tank indoors. Replace gasoline cap securely and wipe up all spilled fuel.

Use clean, unleaded gasoline (85 octane minimum). Regular leaded gasoline may also be used but it is not a preferred fuel. Do not use highly leaded premium gasoline. Use of unleaded gasoline results in less maintenance.

IMPORTANT: Do not use gasoline de-lcers. Gasoline del-cers can cause internal damage to carburetor and fuel pump parts. Do not use fuels containing alcohol concentrations greater than ten percent. Do not use fuels containing methanol. Fuel containing alcohol may cause poor engine performance and internal engine damage.

If regular leaded gasoline is used continually, carbon and lead deposits should be removed from the cylinder heads as required because of engine power loss. Unleadedgasoline may be used safely after lead deposits have been removed.

OIL SPECIFICATION

To protect your tractor's engine, check oil level before each use. **On 314 models,** engine is equipped with a low oil safety switch and will not allow engine to crank when oil is low or out and key switch is in "Start" position. A flashing indicator light indicates this condition on 416. A flashing oil light while engine is operating indicates low oil pressure, and the engine should be stopped immediately to determine the cause.

Complete information concerning recommended oils and how to check oil level is given in "Maintaining Your Tractor" section of this manual.

CORRECT MECHANICAL TRANSMISSION OPERATION

To Go Forward Or Reverse

With engine running, depress both clutch and brake pedals. Move range selector to either High or Low position. Move gear shift lever to desired speed forward, or to reverse. Gear shift decal identifies various speeds. Release brake pedal. Slowly reease clutch pedal. As clutch pedal is released, tractor will begin to move.

⚠ CAUTION ⚠

Always release clutch pedal slowly when starting tractor in motion. Sudden starts can be damaging to equipment and could cause loss of operator control.

To Change Speeds Or Direction

When a change in ground speed or direction is required, always bring tractor to a complete halt by depressing both clutch and brake pedals.

Never attempt to shift gears with unit in motion. Severe internal transmission damage may result.

Change gear shift lever or range selector as desired. Approximate ground speed for each gear is shown in Specifications Section in front of this manual.

It is not necessary or recommended to shift "up" or "down" through gears with tractor in motion. Tractor has sufficient power to move out in a selected gear. With a heavy load attached, a lower gear should be used.

To Stop

To stop tractor, depress clutch pedal then brake pedal. Clutch pedal must be depressed fully before brake pedal is depressed.

⚠ CAUTION ⚠

When stopping tractor always depress clutch pedal first, then brake pedal. Depressing brake without clutch may cause excessive brake lining wear, or extensive internal transmission damage. Depressing clutch pedal without depressing brake pedal WILL NOT STOP TRACTOR.

CORRECT TRACTOR USAGE

⚠ CAUTION ⚠

Read manuals provided with attachments before operating. Manuals give a more detailed description of operation and point out other areas of caution. Familiarize yourself thoroughly with equipment before attempting to use it.

ATTACHMENT MOUNTING

Hitches

Attach-a-matic front and mid hitches are provided for easy installation and removal of attachments without tools.

Rear mounted attachments are secured to tractor's rear drawbar hitch, or to a special hitch supplied with attachment or available as optional equipment.

To install attachments make sure hitch latches are in released position - to do this, push in on lock release pin; move latch lever or handle so latch is open and release lock pin to hold latch in open position. Insert and center attachment shaft in hitch slots and move latch toward closed position until release pin snaps outward.

Removal of attachment is done by pushing in on lock release pin, which allows latch to be moved to open position.

Note: For specific installation and removal instructions refer to attachment instructions.

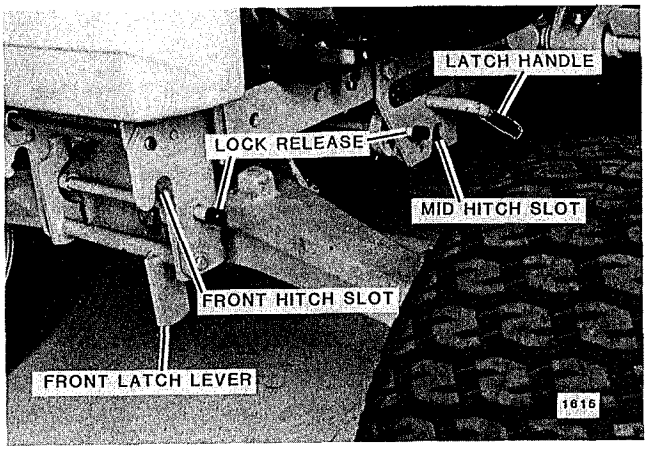

Front and Mid Attachment Hitches

ATTACHMENT BELTS

1. Remove hairpin cotter from trunnion and remove trunnion out of top plate.

2. Remove clevis pin from clutch shaft and clevis.

3. Move top plate forward and remove large hairpin cotter at bottom of rod housing. Slide rod housing down and out of top plate. Swing rod housing to front or rear.

4. Refer to applicable Operator's Manual to determine PTO clutch belt routing. Install belt in inner groove of PTO pulley for mower and tiller. Install belt in outer groove for Snowthrower, Lawn Vac, Generator and Loader.

5. Move top plate forward, insert top end of rod housing in hole in top plate and install large hairpin cotter in bottom of rod housing. Move top plate rearward. Line up clevis with hole in clutch shaft and install clevis pin.

6. Insert trunnion in top plate and secure with hairpin cotter.

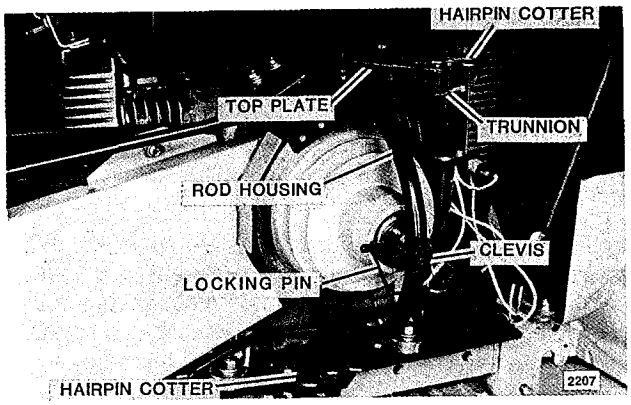

Power Take-Off (PTO)

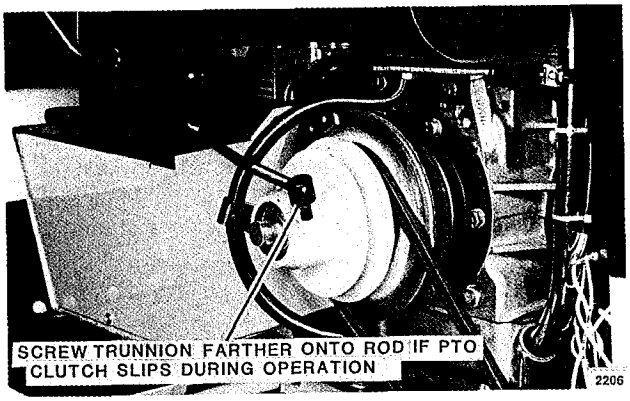

Belt Routing - Both belt strands INSIDE Rod Housing

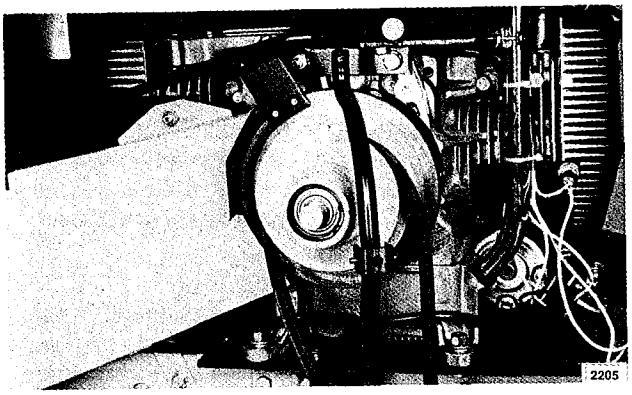

Belt Routing - One belt strand OUTSIDE, one INSIDE of rod housing

OPERATION OF TRACTOR

Because of sufficient tractor engine power no problems should be encountered using attachments under normal conditions. On rough, hilly, or wet terrain, addition of wheel

weights and tire chains will minimize rear tire slippage. All tires may be fluid filled.

WITH A MOWER

⚠ DANGER ⚠

Keep all shields and mower discharge chute in place. Never put hands or feet under mower deck. Never attempt to clear discharge areas or mower blades without disengaging PTO clutch and removing ignition key.

For best operation on average lawns, operate engine at full throttle while controlling ground speed with transmission. Tractor should be operated at 2 to 3.5 MPH (3.2 to 5.6 kmh)* while mowing grass. Uneven cutting is often a result of excessive ground speed. To correct, reduce ground speed with transmission. Average lawns are usually cut at a height between 2 and 3 in. (5-7.6 cm). Tall grass and weeds should be cut with mower in its highest position, making a second pass cutting at height desired.

Always keep mower blades sharp.

⚠ DANGER ⚠

Sharp edges of mower blades can cut you during blade maintenance or adjustment. Use suitable covering over cutting edges of blade to prevent bodily harm.

WITH A SNOWTHROWER

⚠ CAUTION ⚠

Thoroughly inspect area where snowthrower is to be used. Remove all door mats, sleds, boards and other foreign objects. Never make any adjustments while engine is running. Never try to clear chute while engine is running.

Snow removal will vary greatly with condition of each snowfall. Light fluffy snow will be cleared with ease. Heavy wet snow will be more difficult. It is advisable to coat auger and chute with a light coat of wax or paraffin to keep snow from sticking. Best results are usually attained when tractor ground speed is set at 1 to 2 MPH (1.6 to 3.2 kmh).*

NOTE: Inflate front tires to 20 P.S.I. for use with two stage snowthrower.

Care should be exercised whenever snow thrower is engaged. Auger is capable of picking up sticks, stones and other foreign objects and expelling them with great velocity. Always aim discharge chute away from persons or objects subject to harm.

Tire chains and wheel weights are recommended when using a snowthrower.

WITH A SNOW, DOZER OR GRADER BLADE

Although front end dozer blade is generally used for snow removal, it can also be used for moving dirt, sand or gravel. Care should be taken and a slow ground speed should be maintained whenever blade is used. Impact with a solid object may result in injury to operator and/or damage to blade.

Grader blades are generally preferred for leveling sand, dirt or gravel. Operation of these blades is similar to that of a dozer blade. Rear mount grader blades may require special hitches; consult your dealer for proper hitch(es) required for your tractor.

Front wheel weights may be used to increase front wheel traction. Rear wheel weights and tire chains may also be used to increase rear wheel traction.

WITH A TILLER

Tiller does an excellent job of preparing gardens for planting.

⚠ CAUTION ⚠

Caution should be exercised when tilling virgin ground or clay as tiller may have a tendency to push tractor. This can be corrected by raising tiller with attachment lift so tiller penetrates only very top of soil.

If tiller starts to push tractor, shut tiller off immediately by disengaging PTO clutch. Tiller can be lowered to its full depth on following passes.

Rear wheel weights and cleat tires or tire chains will reduce pushing effect of tiller. Front weights may be used to help improve steering control.

Slowing tractor's ground speed will improve aggressive action of tiller. Best results are usually attained when tractor ground speed is set at less than 1.0 MPH (1.6 kmh).*

Do not over-till soil. Soil tilled excessively will not hold water, and will compact easily.

WITH A PLOW, DISC, CULTIVATOR, OR HARROW

Plows and disc require maximum tractor efficiency. Cleat tires, or tire chains, as well as wheel weights increase rear tire traction. Front wheel weights add to steering control of tractor.

Some of these attachments require special rear hitches. Consult your dealer for proper hitch(es) required for your tractor.

There are two methods of preparing a seed bed for planting.

1. Use a tiller, which will prepare soil in one operation.

2. Use a plow to turn ground , a disc to break up large clumps, and a harrow to pulverize and smooth soil.

Plows are classified by width of furrow they will turn. Generally, plows are set to cut 4 to 6 in. (10-15.2 cm) deep.

A disc is used immediately after plowing. Disc will break large clumps of soil.

*Average walking speed is 3.5 MPH (4 kmh).

After discing, generally, a spike tooth harrow helps pulverize soil and levels seed bed. Soil should now be ready for planting.

Cultivator is used during growing season to help remove unwanted weeds, and to help aerate plant roots. Generally, width of cultivator is taken into consideration before planting seed bed to insure cultivator fitting between rows without damaging crop roots.

WITH A REAR BAGGER

Optional rear mount grass catcher can affect way tractor is operated. Because of added weight of bagger and extra power required, operate tractor in a lower transmission gear.

⚠ CAUTION ⚠

Exercise care while maneuvering with grass catcher. Front to rear stability could be adversely affected.

Under normal usage, grass catcher bag material is subject to deterioration and wear. Check bag condition frequently and replace when needed.

WITH OTHER ATTACHMENTS

There are numerous other special-purpose attachments available, which greatly increase tractor's versatility. Attachment can be a completely self-contained system (front bucket loader), one that is used along with another attachment (lawn vacuum), or one intended for operator comfort (snow cab). These attachments are custom designed for a particular tractor model, but many others simply use tractor as a towing vehicle. They are attached or removed from tractor by installation or removal of a single drawbar hitch pin. Some of these attachments are powered by a separate gasoline engine, some are ground driven and some are simply towed, such as a dump cart.

In any case, all these attachments should be approached with same amount of caution given any mechanical device. Always read each Operating Instruction Manual carefully before attempting to use attachment. Keep children and pets away from vehicle when in operation. Never allow any unauthorized personnel to operate equipment.

Your authorized Toro Wheel Horse Dealer can assist you with selecting attachments for use with your tractor.

DUMP CART LOAD LIMIT

Toro Wheel Horse recommends following load limit be observed when using tractor with a dump cart on slopes. Load limit has been set to provide for safe braking on slopes.

275 lbs. (127 kg)

MAINTENANCE

⚠ DANGER ⚠

To minimize chance of injury, perform all maintenance and adjustments on your tractor with engine off and ignition key removed, unless instructed otherwise in this section. Use extreme care when working near operating machinery. Do not wear loose fitting clothing. Remove watch and jewelry before beginning work and observe common safety practices when using tools.

MAINTENANCE CHECKLIST

NOTE: These service intervals are considered MAXIMUM under normal conditions. Increase frequency under extremely dirty or dusty conditions.	Before Each Use	After Each Use	Every 25 Hours	Every 50 Hours	Every 100 Hours/1 Year (2)	Every 200 Hours/1 Year (2)	Every 1000 Hours
SERVICE OPERATION							
CHECK:							
Safety Interlock System	X						
Engine Oil Level	X						
Battery Water Level				X			
8 Spd. Trans. Oil Level			X				
General Unit Condition	X	X					
Parking Brake Adj.					X		
Tire Pressure			X				
Fasteners Placed & Tight			X				
PTO Clutch & Brake Adjustment					X		
CLEAN:							
Air Filter/Precleaner			X				
Engine Chaff Screen	X						
Engine Exterior & Fins				X			
Breather Valve(3)						X	
Cylinder Head Deposits							X
REPLACE:							
Fuel Filter (3)					X		
Spark Plugs					X		
Air Filter (3)						X	
Air Filter (4)					X		
LUBRICATE:							
Chassis			X				
CHANGE:							
Engine Oil (1) (3)				X			
Engine Oil (1) (4)			X				
Engine Oil Filter (3)					X		

Refer to Engine Service Manual for Applicable Information Concerning:

Adjustments

Special Cleaning Instructions

(1) Refer to text for initial service interval for new tractors.

(2) Which ever occurs first.

(3) 416

(4) 312,314

ENGINE

Cooling

Check chaff screen and rotating screen behind chaff screen on engine every time tractor is used. Restricted air flow through engine can cause overheating and engine damage.

Oil Quality

For maximum engine protection under all operating conditions use API Service Classification SF oil. This letter will appear on oil can.

Oil Level

Form a habit of checking oil level regularly.

Check oil level of engine every 8 hours or before each use. An improper oil level can cause extensive internal damage to engine.

Oil filler dipstick and oil drain location for engine is illustrated in following illustrations.

To check engine oil level, stop tractor where engine is level. Shut off engine, set parking brake, and remove ignition key.

⚠ DANGER ⚠

416 Model crankcase pressure can blow out hot oil and cause serious burns. Do NOT check oil while engine is operating.

Remove oil dipstick from engine.

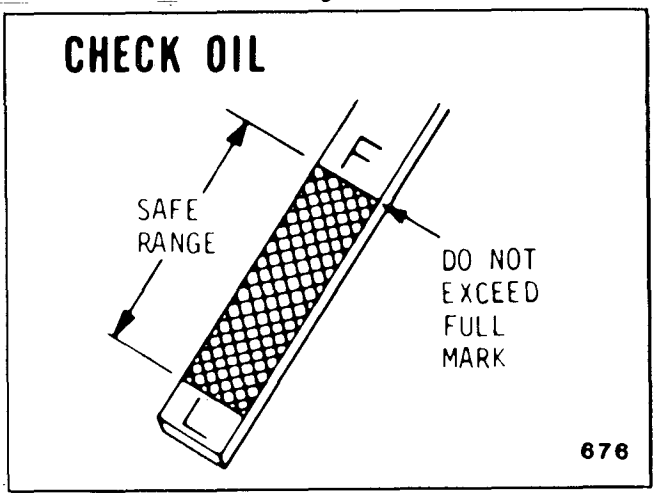

Correct Oil Level

Wipe dipstick with a clean lint free rag; reintall dipstick into block all the way. Remove dipstick again and read scale on lower portion of stick.

Add oil through oil dipstick tube.

IMPORTANT

Do not overfill crankcase. Excess oil causes high oil consumption and oil accumulation in air cleaner housing.

Be sure to add same viscosity oil as is presently in engine. New tractors are shipped with 10W-30 oil in crankcase. It may be necessary to change original oil before using tractor in cold weather.

Oil Changes

Failure to change engine oil at recommended intervals can lead to serious damage to engine. This is especially true when using detergent oils which are designed to hold impurities in suspension; when saturation point is reached, oil may suddenly break down to form a gelatin-like substance which seriously impairs and can even stop flow of oil. Increase frequency of oil and oil filter changes if tractor is operated under extremely dusty conditions.

On 312,314 Model engines, oil should be changed after first 2 hours of operation. Thereafter, oil should be changed at 25 operating hour intervals. If operating conditions are extremely dusty or dirty, frequency of oil changes should be increased. On 314 model oil Sensor Switch should be tested at 500 Hr. oil change interval. To test switch, drain oil and disconnect spark plug. Engine **should not crank** and indicator light should be ON with key in start position. If engine cranks, consult your dealer for service.

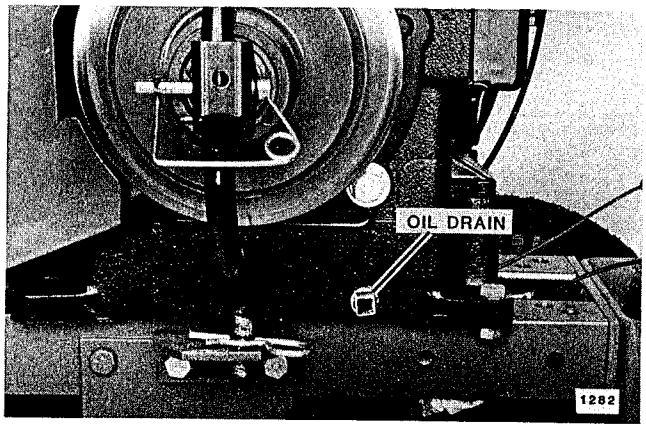

312,314 Oil Drain

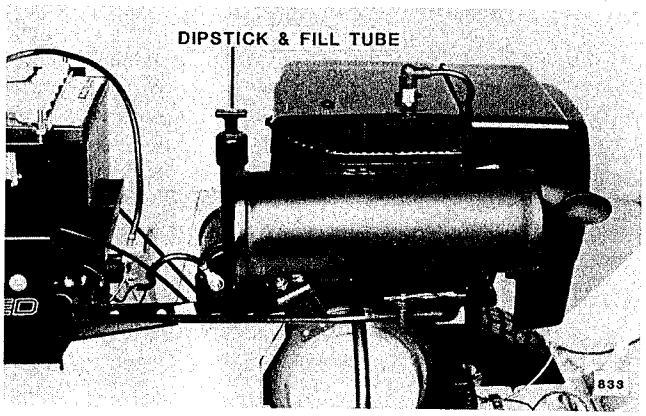

312,314 Oil Dipstick/Fill Tube

On 416 Model engine, oil should be changed after first 25 hours of operation. Thereafter, oil should be changed at 50 operating hour intervals. Oil filter should be changed every 100 hours. If operating conditions are extremely dusty or dirty frequency of oil changes should be increased.

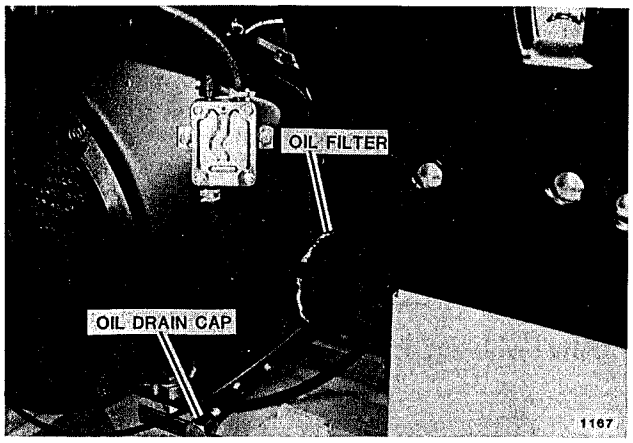

416 Engine Oil Filter and Drain Cap

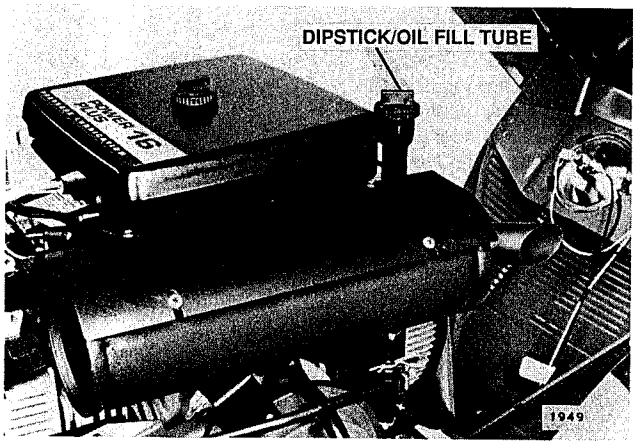

416 Engine Oil Dipstick/Fill Tube

Before changing oil, start engine and allow it to warm up. This will allow oil to flow more freely. Shut engine off and remove key.

Open oil drain. After oil has drained completely, reinstall drain plug or cap.

If oil filter, on engines so equipped, is to be replace unscrew used filter and install new filter on engine.

Remove oil dipstick and add about 80% of amount of oil specified in following charts. Also shown are charts for selecting correct oil type and oil viscosity. When using temperature-viscosity charts, select air temperature most likely to be encountered within next recommended oil change period.

ENGINE OIL CHANGE

Tractor Model	Crankcase Oil Capacity
312,314	2 1/2 quarts (2.3 liters)
416	1.5 quarts (1.4 liters) w/o Filter
	1.7 quarts (1.6 liters) w/Filter

ENGINE OIL TYPE

Engine

Kohler -- API Service SF
TORO POWER PLUS - API Service SF or SF/CC

ENGINE OIL TEMPERATURE - VISCOSITY CHART

Kohler Engine

Air Temperature	Oil Viscosity
Above 32 degrees F (0 degrees C)	SAE 30
Below 32 degrees F (0 degrees C)	SAE 5W-20, 5W-30

TORO POWER PLUS Engine

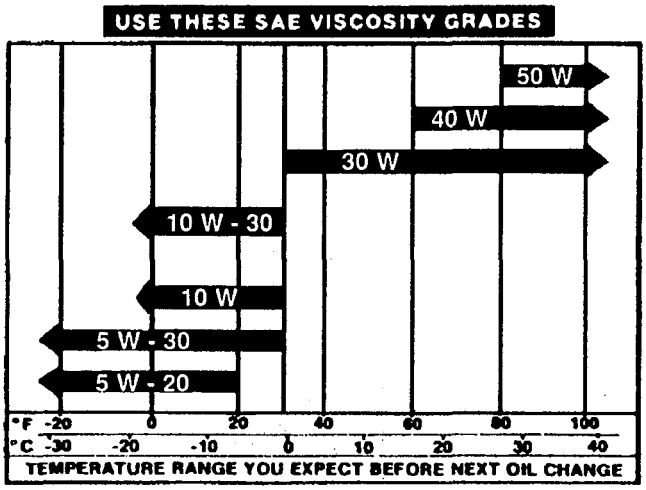

After adding 80% of prescribed amount of oil, check oil level. Add oil as necessary to bring oil to "Full" level or into "Safe" range on engine oil dipstick.

NEVER overfill engine crankcase with oil. Oil level must not exceed "F" level on dipstick.

AIR FILTER

Dirt induced through improperly installed, poorly serviced, or inadequate air filter elements, is more often cause of a worn out engine than long hours of operation. A small amount of dirt will destroy a set of piston rings in a matter of hours. A clogged element causes a richer fuel mixture which wastes gasoline, and may lead to forming sludge deposits.

To prevent any dirt or other contaminates from entering engine, always cover carburetor air horn when air cleaner is removed.

Clean engine air filter after every 25 hours of operation (more often if tractor is operated under extremely dusty conditions).

Dry type air filter element is cleaned by tapping it lightly on a flat surface to remove loose dirt particles. Replace element if dirt does not drop off easily. DO NoT wash elements in liquid. Do not attempt to blow dirt off with compressed air as this can puncture element.

312,314 Models: Replace dry filter elements at 100 hour intervals, or once a year, whichever comes first. Foam type elements may be serviceable for more than 100 hours or one year of operation, provided element shows no sign of deterioration and can still be cleaned satisfactorily. As with cleaning filter, replacement intervals must be shortened when operating under extremely dusty conditions. To protect engine, use only manufacturer's replacement filters with equivalent specifications.

Replace filter elements at 200 hour intervals.

Check following when installing a new or serviced element.

1. Back plate must be securely tightened to carburetor. Replace back plate if bent or cracked.

2. Gasket surfaces of element must be flat against back plate and cover to seal effectively.

3. Wing nut (s) must be finger tight-don't overtihghten. Tighten screws securely.

4. Be sure cover seals and gaskets, where used, are in good condition and will seal properly. Bad gaskets and seals can let unfiltered air into carburetor.

Foam precleaners are used over filter elements. Clean precleaner at 25 hour intervals, when air cleaner is serviced. Wash precleaner in a solution of liquid dish washing detergent and water. Squeeze out excess oil and install precleaner on element.

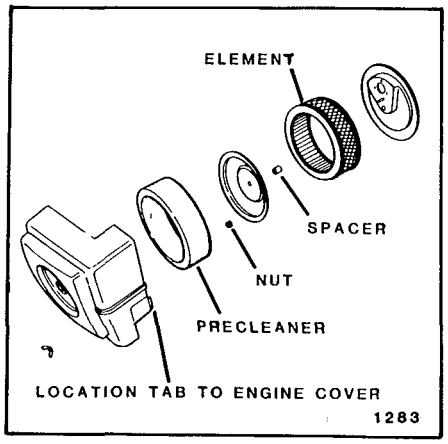

312,314 Air Cleaner

416 Models: Replace more frequently in dusty operating conditions. To protect your engine, use only manufacturer's replacement filters with equivalent specifications.

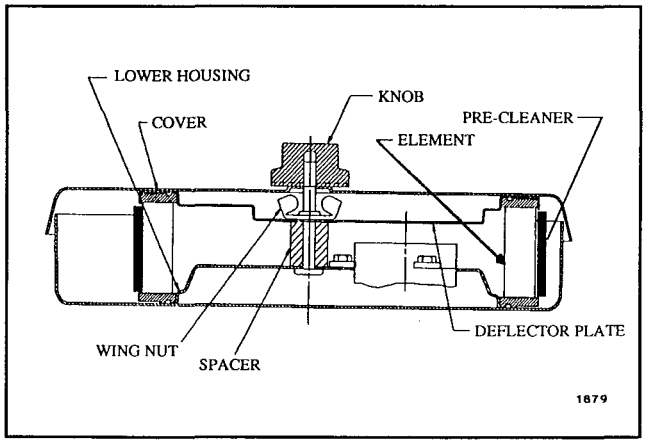

416 Cleaner Assebly

CRANKCASE BREATHER (416-Model)

Engine use a crankcase breather valve and "Pack" for maintaining crankcase vacuum. If crankcase becomes pres-

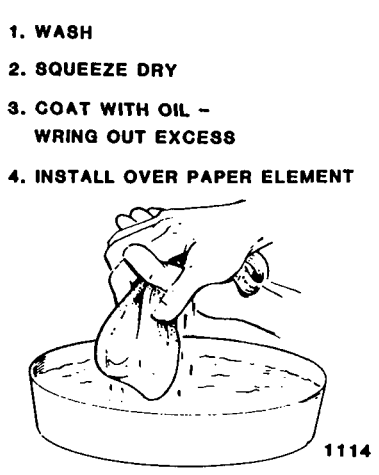

Pre-Cleaner Service

surized as evidenced by oil leaks at seals, clean pack and valve screens in a suitable solvent. Check and clean valve and clean valve and baffle every 1000 hours of operation.

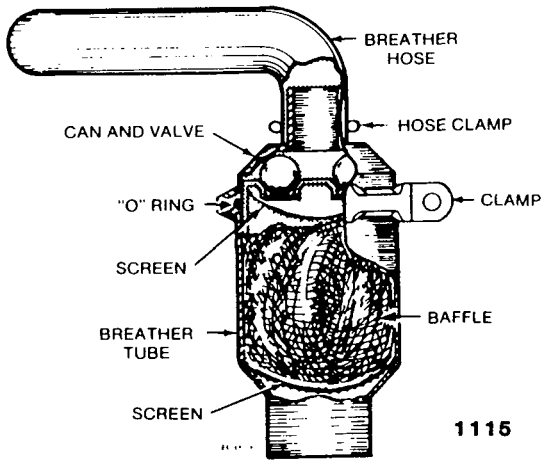

Crankcase Breather

SPARK PLUG(S)

Engine misfire, or generally poor operation, is often caused by spark plug(s) in poor condition or with incorrect spark gap setting. Spark plug(s) should be checked after each 100 hours of operation. Replace a spark plug if inspection reveals fouling or excessive deterioration.

Always clean area around spark plug(s) before removing them to prevent dirt from entering engine. Use a spark plug wrench to remove and install plugs.

Check condition of plug(s). Good operating conditions are indicated by a light coating of gray or tan deposit. A dead white, blistered coating of gray or tan deposit. A dead white, blistered coating could indicate engine overheating. A black coating could indicate an "overrich" fuel mixture caused by a clogged air cleaner, or improper carburetor or adjustment.

Replace spark plug(s) that are not in good condition. Never sandblast, wire brush, scrape or otherwise service a spark plug in poor condition. Best results are obtained with a new plug.

Always check spark plug gap before installing new plug(s) or reinstalling original plug(s). Use a spark plug gap gauge to adjust electrode air gap to specification for engine.

Tractor Model	Plug Gap
All Models	.025 in. (.6 mm)

Tighten spark plug(s) to:

All Models-15 ft. lbs. (20 nm)

ELECTRONIC IGNITION

Breakerless electronic ignition system requires no periodic maintenance.

FUEL SYSTEM

A fine-mesh screen type strainer is incorporated into fitting at bottom of fuel tank, which filters foreign matter from gasoline before it reaches carburetor. This strainer normally requires service only if fuel supply becomes severely contaminated.

On 416 model, engines have an in-line fuel filter located near carburetor. This filter should be replaced after each 100 hours of operation or at 1 year intervals, whichever occurs first.

Always clean area around fuel cap before removing it to prevent excessive amounts of dirt from entering fuel system. Also insure that fuel storage container you are using is clean and in good condition.

Fuel filter gives only limited protection against moisture in fuel system. Keep fuel tank full during winter operation, when cold and damp weather conditions can cause moisture to condense in tank.

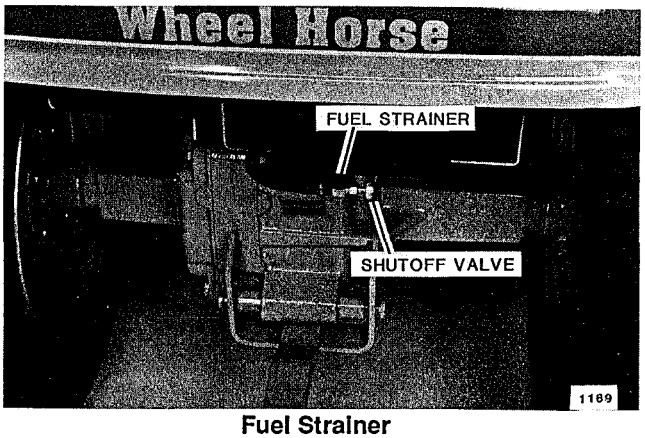

Fuel Strainer

CARBURETOR ADJUSTMENT

Carburetor is adjusted at factory and should not have to be reset. If a condition is noted as outlined in following "Carburetor Chart", carburetor should be readjusted immediately. Continued operation with incorrect carburetor settings can lead to a fouled spark plug, overheating, excessive valve wear or other problems. If black exhaust smoke is noted, check air cleaner element first-an "overrich" mixture is usu

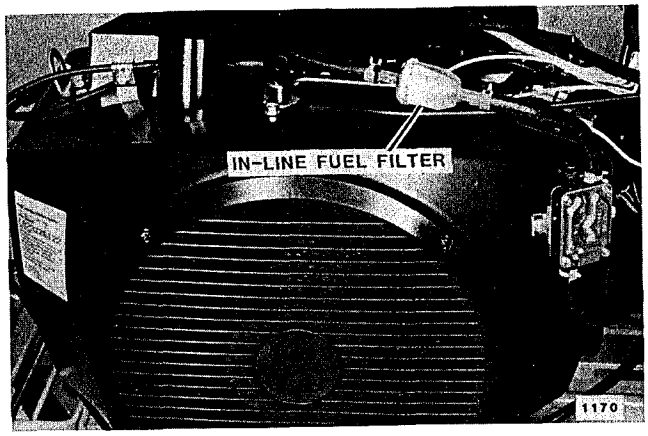

416-Model Fuel Filter

ally caused by a poorly serviced, clogged air cleaner element, not an improperly adjusted carburetor.

Correct carburetor adjustment requires a significant amount of knowledge as well as special equipment, such as a good tachometer. In addition, other adjustments, such as governor settings may also be necessary after adjusting carburetor. For these reasons, it is suggested that carburetor adjustments be performed by an authorized dealer.

Condition
A. Black, sooty exhaust smoke, engine sluggish.
B. Engine messes and backfires at high sped.
C. Engine starts, sputters and dies under cold weather starting.
D. Engine runs rough or stalls at idle speed.

Carburetor Chart

CHARGING AND ELECTRICAL SYSTEMS

ALTERNATOR

An alternator is used to charge battery. Alternator charging system normally requires no service other than periodically checking all exposed wiring and electrical connections on tractor are clean, tight and in good condition. **On 416 Model.** a 30 amp automotive type ATO or ATC fuse is used to protect charging circuit. Main fuse is used to protect charging circuit. Main fuse protects charging circuit on 312 and 314 models.

⚠ CAUTION ⚠

Proper polarity is critical with an alternator equipped charging system. Always disconnect battery ground cable (negative) before working on any part of electrical system. Verify all components will result. Battery can explode and cause severe injury.

Never run engine if battery is removed, or if battery is not connected to charging system. Serious damage to voltmeter, circuit board and charging system components may result.

MAIN FUSE

A 25 amp automotive type ATO or ATC fuse is used to protect main circuit of electrical system.

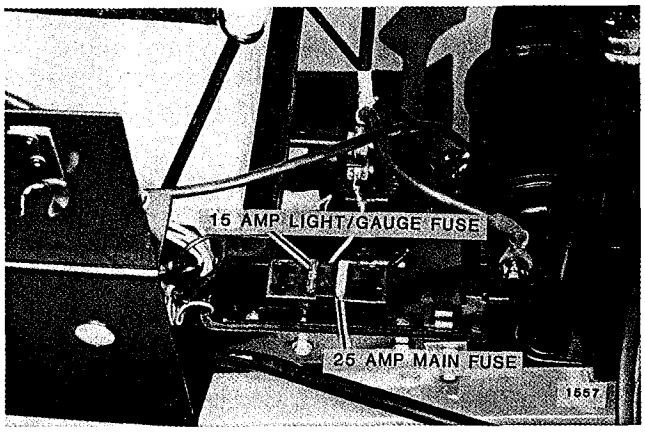

312,314-Model Fuse Location

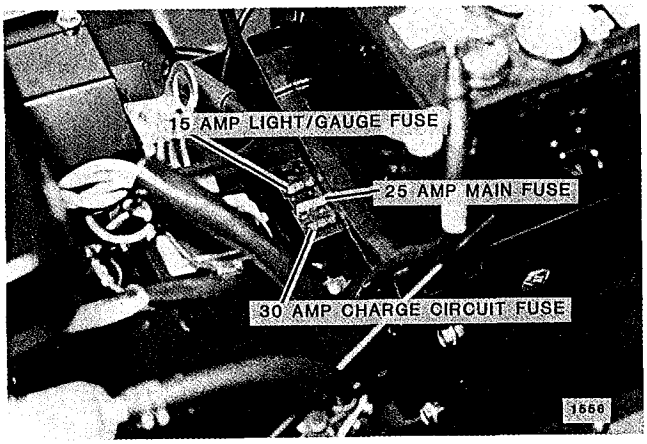

416-Model Fuse Location

LIGHT CIRCUIT FUSE

Light circuit is powered by battery. Lights will operate when ignition switch is in "Run" position. A 15 amp automotive type ATO or ATC fuse is part of light circuit.

GAGE CIRCUIT FUSE

Gage circuits are protected by light circuit 15 amp automotive type ATO or ATC fuse.

BATTERY

⚠ CAUTION ⚠

When servicing battery or any other part of electrical system, or if battery must be removed for any reason, always disconnect negative (ground cable First and reconnect it Last to avoid possibility of electrical shorts. Battery can explode and cause severe injury.

Maintain electrolyte level above plates in each cell by adding distilled water as necessary. Best time to add water is just prior to operating tractor so water will mix with solution. Do not overfill battery. Electrolyte solution is corrosive and overfilling can cause damage to surrounding metal parts. Battery should be maintained a 1.265 specific gravity charge.

When battery has been out of tractor servicing, take care to connect cables to battery exactly as they were before removal.

For longest service life, battery should be kept clean by wiping it off with a paper towel. Any corrosion around battery terminals should be removed by applying a solution of one part baking soda to four parts water. A light coating of grease may be applied to all exposed terminal surfaces to prevent corrosion.

At temperatures below 32 degrees F (0 degrees C), full charge state must be maintained to prevent cell electrolyte from freezing and causing permanent battery damage.

LIGHT BULB REPLACEMENT

Headlight and tail light bulbs (on models so equipped) are replaced as described below. Care should be taken when handling bulbs, particularly if they are broken.

Either sealed beam headlamp unit is replaced by first disconnecting both terminal wires. Note way headlamp is installed, then carefully remove bolt and retainer to release headlamp.

To replace a tail light bulb, pry lens off with a screwdriver. A slot is located at each end of lens for this purpose. If bulb has a metal socket, push bulb down and turn counterclockwise to remove it. If bulb has a plastic socket, simply pull bulb straight out. Tail light bulbs are automotive #1895 (metal base) or #194 (all glass).

To replace indicator light bulb, consult your authorized Toro Wheel Horse Dealer.

8-SPEED TRANSMISSION

OIL QUALITY

Mechanical transmission in your new Toro Wheel Horse Tractor is filled with gear oil. Same type oil must be used whenever transmission needs filling.

Transmission	Oil	Capacity
8-Speed	SAE 90	2 qt. (1.9 Liter)
	API Service GL-5	

OIL LEVEL

Lubricant level should be checked after every 25 hours of operation. Changing lubricant is not required except for major service. To check lubricant level remove dipstick from transmission case. Maintain oil "full" level on dipstick.

Use care to prevent dirt, clippings or other foreign material from entering transmission during oil level checks, oil fillings or oil changes.

CHASSIS LUBRICATION

Steering gear, brake pedal, clutch pedal, spindles, front wheel bearings and front axle pivot are equipped with fittings to facilitate lubrication with pressure grease gun. Before applying grease gun, clean zerk fittings carefully to prevent

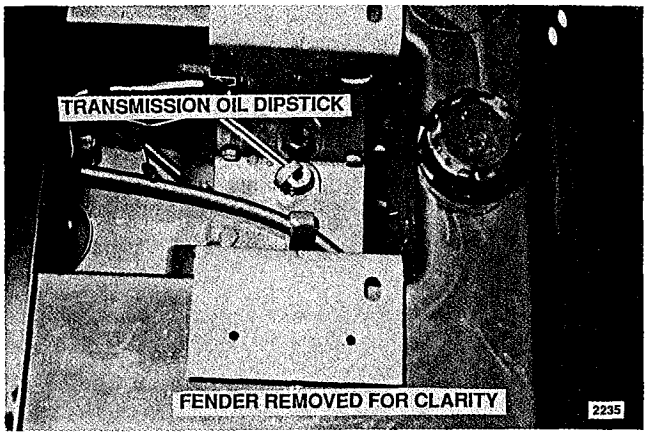

Transmission Dipstick

dirt from being forced intro fitting. After inserting grease, wipe off any excess grease. A general purpose grease (lithium base) is used to lubricate tractor.

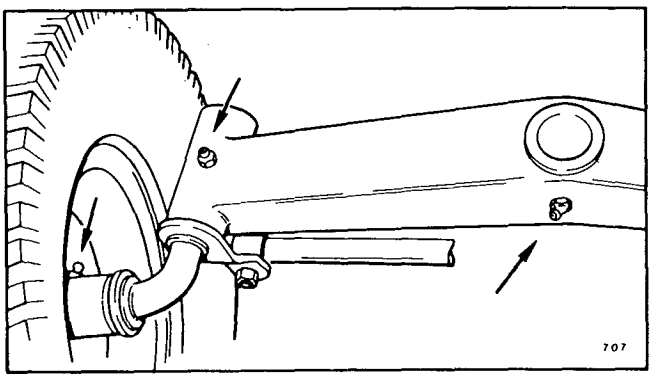

Front Wheel, Spindle and Front Axle Lube Fittings

Lubricate chassis after each 25 hours of operation. Also apply a small amount of grease to steering teeth. All other pivoting arms and levers should be lubricated at same intervals with either general purpose grease or machine oil, applied directly to wear surface.

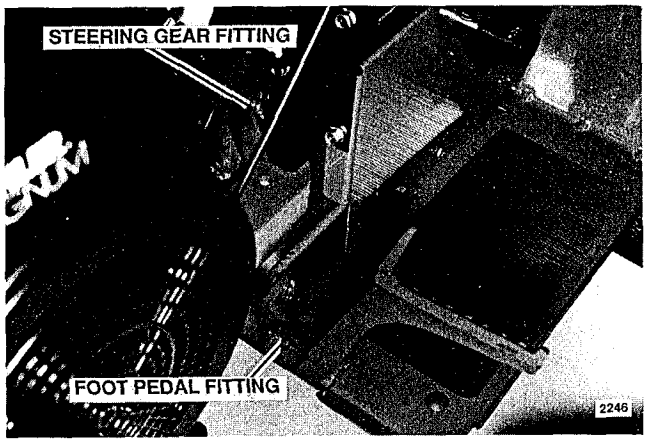

Steering Gear and Foot Pedals Lube Fittings

FOOT BRAKE ADJUSTMENT

Brake band, located on left side of transmission, brakes transmission shafts and, in turn, brakes rear wheels.

To adjust brake push down on brake pedal and pull back on parking brake lever. With parking brake engaged, adjust nut on end of rod until brake band is tight enough to skid both rear wheels when tractor is pushed. Then tighten nut another 1/2 turn. After adjustment, parking brake lever should not travel to end of lever's slot when parking brake is engaged. With brake released, brake band should not "drag" on brake drum.

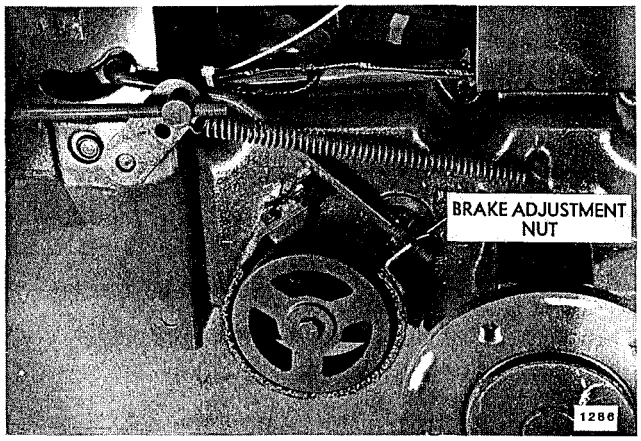

Brake Adjustment

PTO CLUTCH AND BRAKE ADJUSTMENT

PTO clutch and brake may require periodic adjustment due to normal wear of friction surfaces. If clutch slippage is apparent, turn trunnion farther onto clutch rod in one turn intervals until slippage is eliminated.

To adjust PTO brake:

1. Engage PTO clutch

2. Loosen two bolts that hold brake pad bracket to support bracket.

3. Place a.012in. (.3 mm) feeler gauge between brake pad and clutch pulley.

4. While holding brake pad against feeler gauge and pulley, tighten two brake bracket bolts.

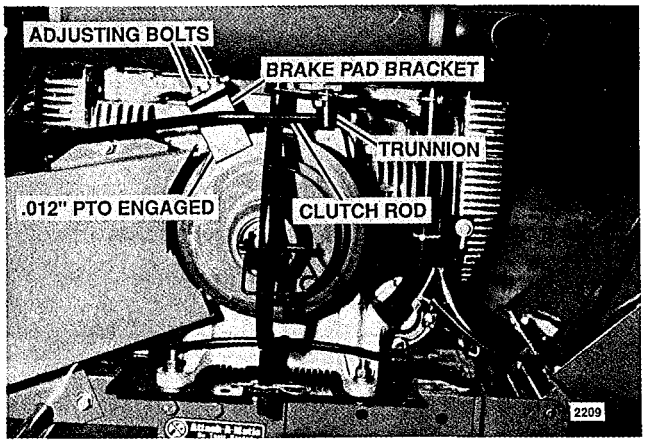

PTO Adjustments

EXHAUST SYSTEM

Make regular visible and audible inspections of exhaust system throughout life of tractor. Locate leaks in muffler and piping while engine is operating. Repair all leaks immediately after they are detected for personnel safety.

⚠ DANGER ⚠

Inhalation of exhaust gases can result in serious personal injury or death. Inspect exhaust system audibly and visually for leaks daily. Repair any leaks immediately.

CLEANING AND STORAGE

Tractor should be washed regularly with a mild automotive detergent and water. Avoid excessive use of water, especially around control panel, engine and transmission. Do not pressure wash. After 30 days, painted surfaces may be waxed to protect original finish.

Minor paint scratches or abrasions can be removed with an automotive cleaning and polishing compound. Rubbing compound is not recommended under normal circumstances, ass it is highly abrasive. Exposed bare metal surfaces should be given a light coating of oil or grease to prevent rust until permanent repairs can be made. Aerosol cans of Toro Wheel Horse paint are available through your Authorized Toro Wheel Horse Dealer.

When tractor will not be used for an extended period of time, following steps will help insure minimum difficulty when unit is returned to service:

1. Perform required steps called for in "Maintenance Checklist".

2. Check tires for proper inflation.

3 Drain all fuel from fuel tank. Start tractor and let engine run out of gas. As gasoline grows old, it becomes less volatile and forms harmful gum and varnish deposits in carburetor and fuel pump. DO NOT STORE GASOLINE FOR MORE THAN 2 MONTHS.

4. Wash tractor and repaint all bare metal surfaces.

5. Charge battery. In temperatures lower than 40 degrees F (4 degrees C) a battery will maintain a charge for about 50 days. In temperatures above 40 degrees F (4 degrees C) water level should be checked and battery "trickle charged" every 30 days (more often in higher temperatures). Battery must be fully charged to prevent freezing and internal damage in weather below 32 degrees F (0 degrees C).

6. Remove key from tractor.

TROUBLESHOOTING CHECKLIST

SYMPTOM	POSSIBLE CAUSE	POSSIBLE REMEDY
Engine will not turn over.	Dead battery.	Charge or replace battery.
	Open safety interlock switch.	Be sure PTO is disengaged and brake pedal is depressed.
	Starter.	Consult authorized dealer.
	Solenoid.	Consult authorized dealer.
	Ignition switch.	Consult authorized dealer.
Engine turns over but will not start.	Spark plug not firing.	Check spark plug condition and reset gap.
	Ignition system.	Consult authorized dealer.
	No fuel in tank.	Refuel tractor.
	Fuel valve closed.	Open fuel valve.
	Improper carburetor adjustment.	Reset carburetor adjustment.
	Ignition switch.	Consult authorized dealer.
Engine hard to start.	Spark plug wire(s) grounded or loose.	Check spark plug wires.
	Ignition system.	Consult authorized dealer.
	Spark plug(s) faulty or improperly gapped.	Check spark plug condition and reset gap.
	Fuel line clogged.	Clean fuel line and if applicable, check fuel filter.
	Faulty fuel pump.	Consult authorized dealer.
	Carburetor dirty or improperly adjusted.	Readjust carburetor. Consult dealer for authorized carburetor service.
Engine starts, but operates erratically.	Clogged fuel line.	**Clean fuel line; check strainer in fuel tank. If applicable check in-line fuel filter.**
	Water in fuel.	Drain old fuel and replace with fresh supply.
	Vent in fuel cap plugged.	Check vent.
	Ignition system.	Consult authorized dealer.
	Improper carburetor adjustment.	Readjust carburetor.

TROUBLESHOOTING CHECKLIST (Continued)

SYMPTOM	POSSIBLE CAUSE	POSSIBLE REMEDY
Engine knocks.	Fuel octane too low.	Drain fuel and replace with higher octane supply.
	Faulty Ignition System.	Consult authorized dealer.
	Engine overheated.	Shut off engine and allow to cool.
Engine occasionally "skips" at high speed.	Spark plug(s) fouled, faulty or gap too wide.	Check spark plug condition and gap.
	Faulty Ignition System.	Consult authorized dealer.
	Incorrect carburetor adjustment.	Readjust carburetor.
Engine overheating.	Air intake screen or fins clogged	Clean intake screen and fins.
	Oil level too high or too low.	Adjust oil level as necessary.
	Fuel mixture too lean.	Readjust carburetor.
	Faulty Ignition System.	Consult authorized dealer.
	Engine overloaded.	Reduce load on tractor.
Engine idles poorly.	Improper carburetor adjustment.	Readjust carburetor.
	Improper spark plug gap.	Check condition and gap of spark plug(s).
Engine backfires.	Improper carburetor adjustment.	Readjust carburetor.
	Ignition system.	Consult authorized dealer.
Engine runs fine, but tractor will not move.	Transmission not in gear.	Select gear.
	Faulty Transmission.	Consult authorized dealer.
Engine stalls whenever PTO is engaged.	Excessive load on PTO.	Check for jammed attachments. Lessen load on attachment.
	Faulty interlock system.	Seat must be occupied to close interlock system. Consult authorized dealer.

WIRING DIAGRAM - 312 MODEL

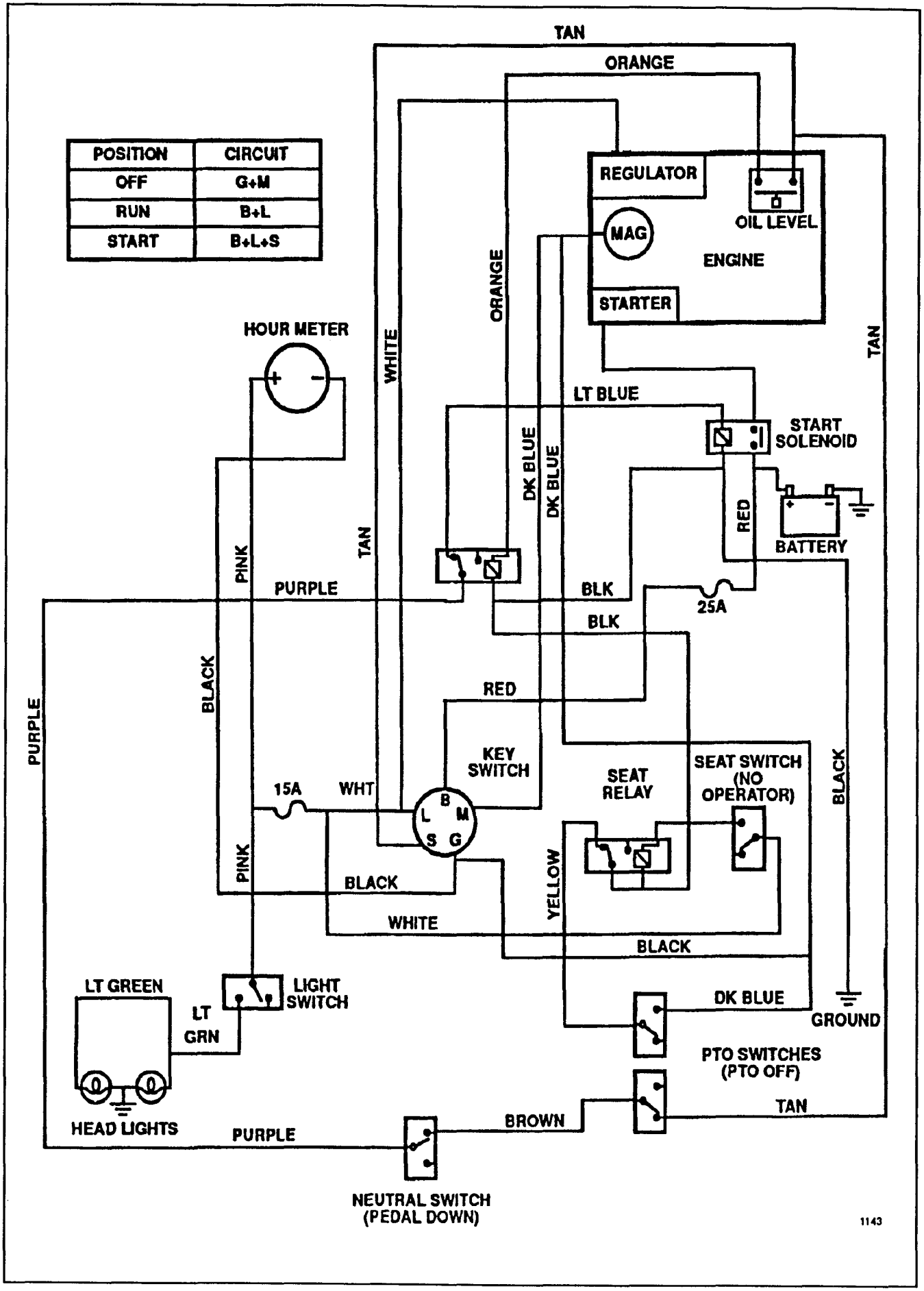

WIRING DIAGRAM - 314

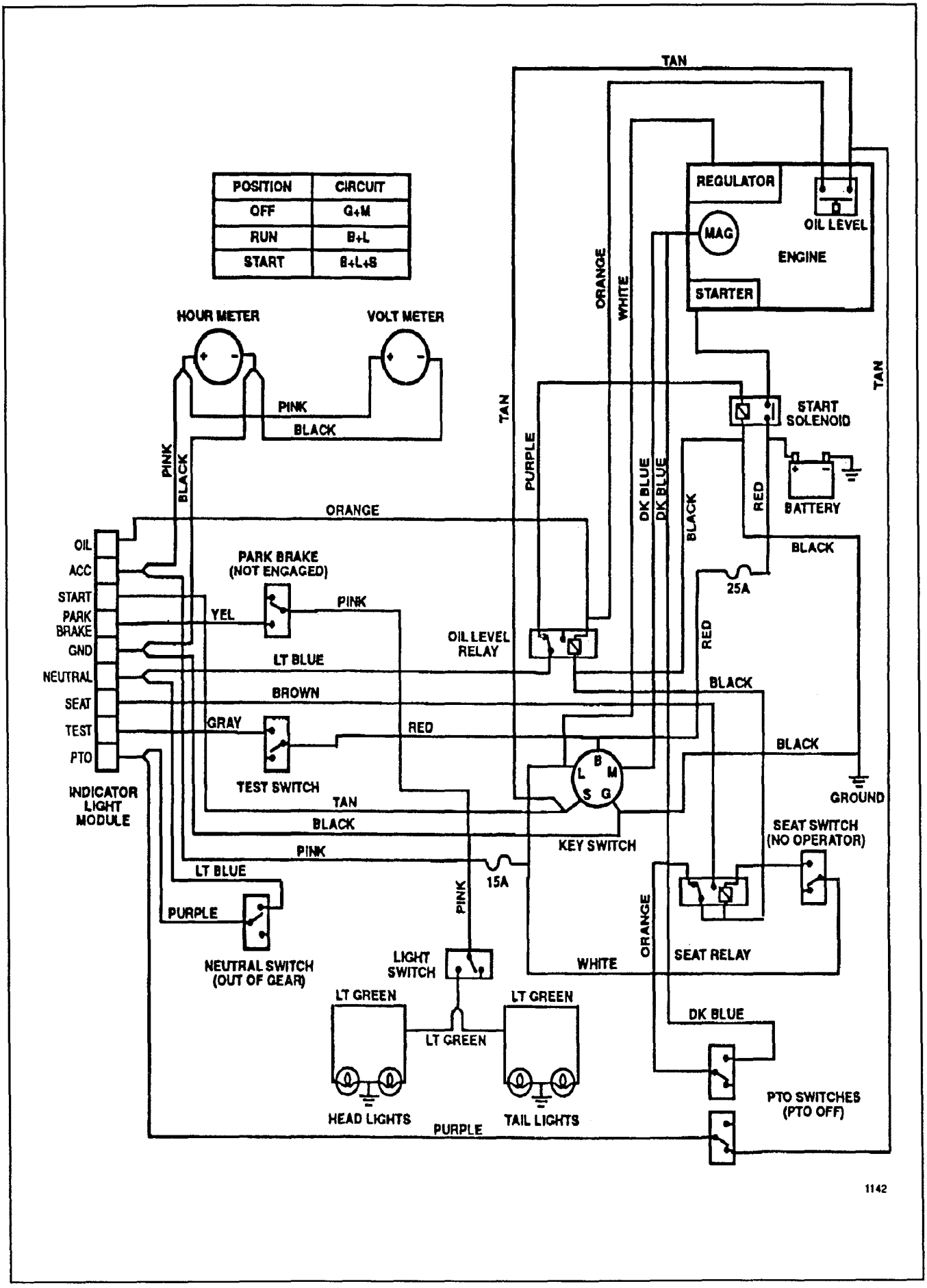

WIRING DIAGRAM - 416

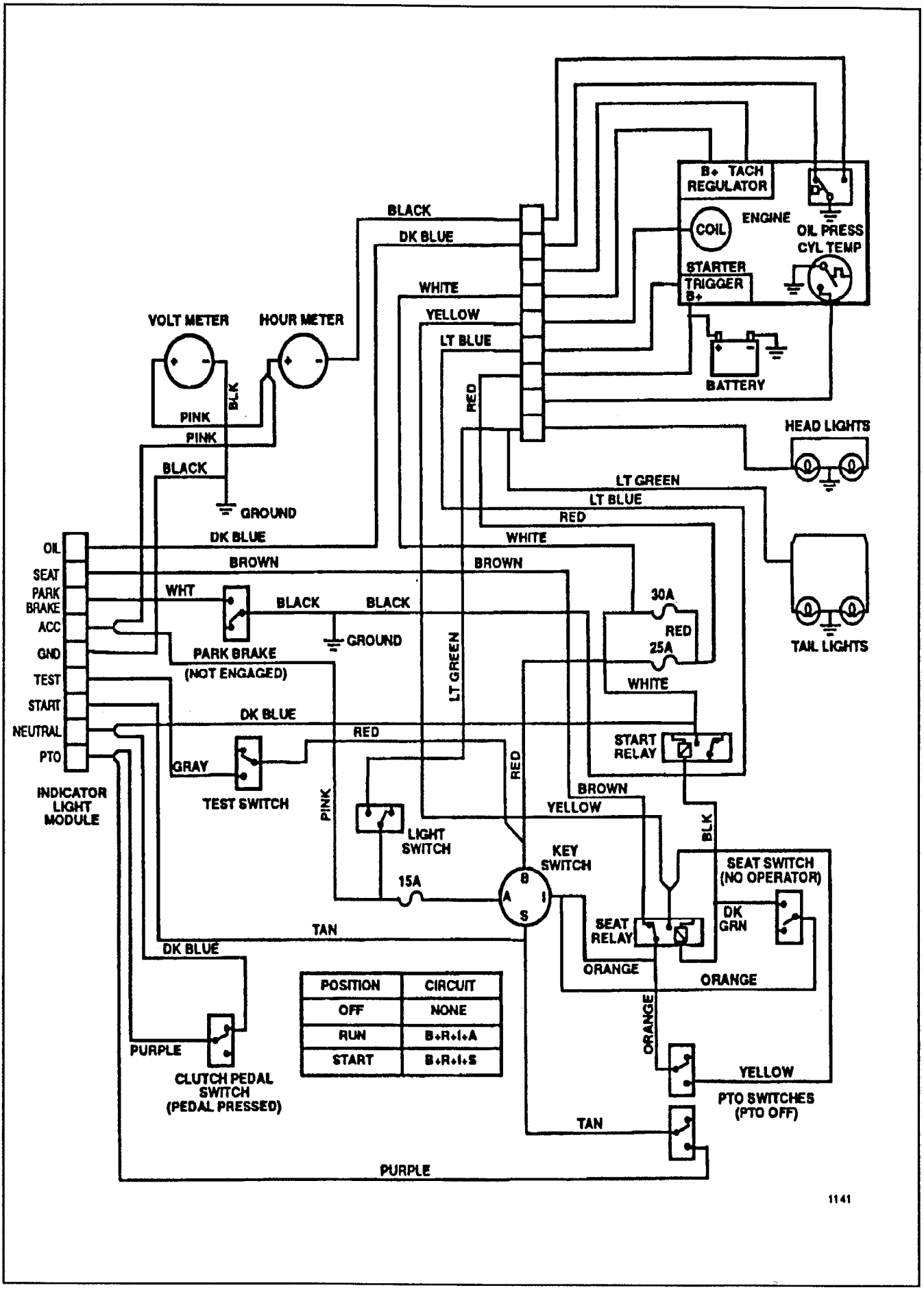

10° SLOPE CHART

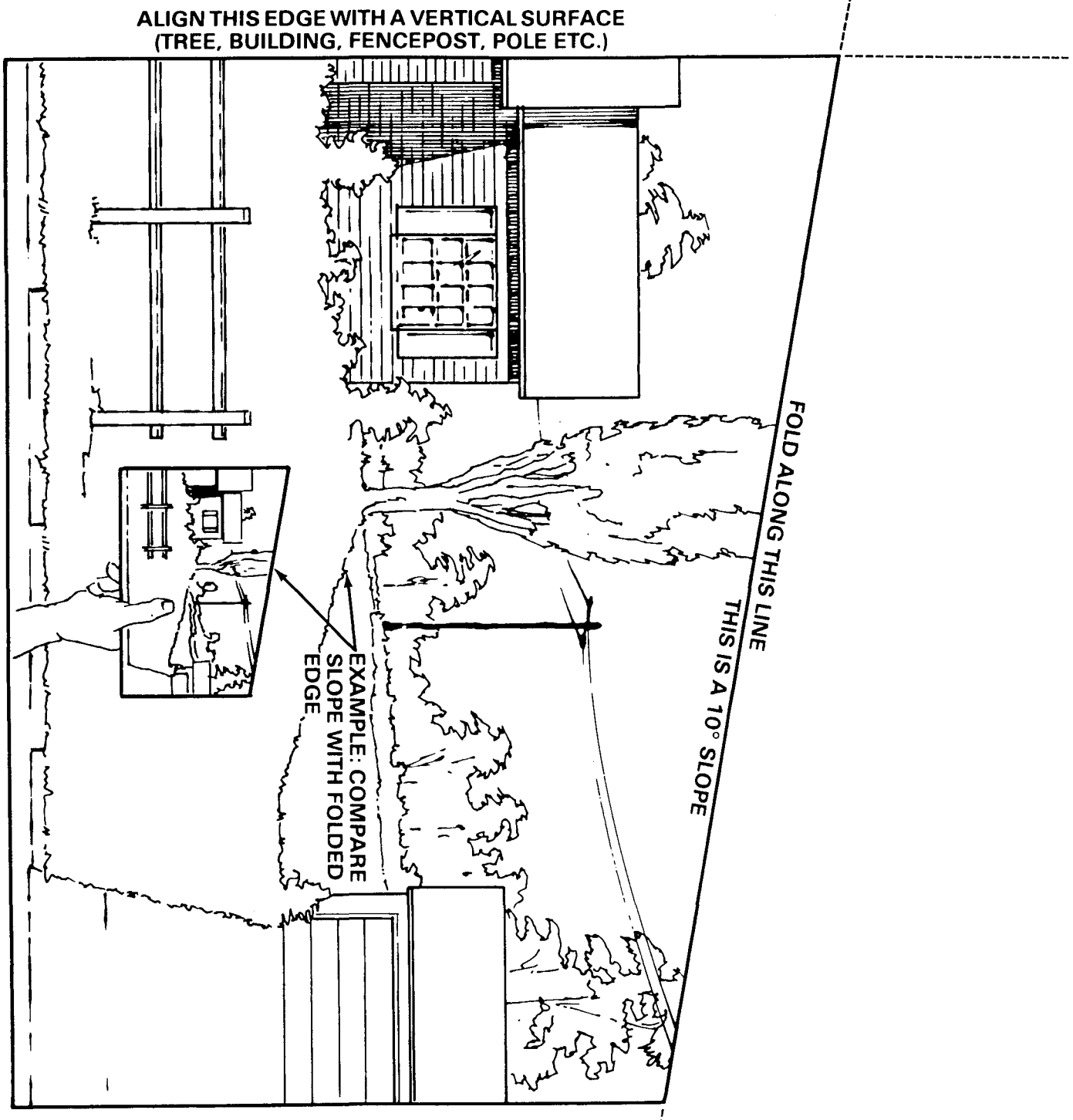

TORO Consumer Products

THE TORO TOTAL COVERAGE GUARANTEE

A Full Two–Year Warranty
(Limited Warranty for Commercial Use)

What Is Covered By This Express Warranty?

The Toro Company promises to repair any TORO Product used for residential purposes if defective in materials or workmanship for a period of two years from the date of purchase. The cost of parts and labor are included, but the customer pays the transportation costs.

Transportation within a 15 mile radius of the servicing dealer is covered under this warranty for two–stage snowthrowers, walk behind debris equipment and all TORO Wheel Horse riding products. Walk power mowers, single stage snowthrowers, and other products not specifically covered, are excluded from the transportation coverage provided by this warranty.

What Products Are Covered By This Warranty?

This warranty applies to all gasoline powered Consumer Products (including TORO Wheel Horse riding products). ProLine riding products, wide area walk behind mowers and 21" Commercial mowers without blade stop controls are covered by separate warranty statements.

How About Commercial Use?

TORO Consumer Products used for commercial, institutional or rental use are covered by a limited warranty for the following time periods from the date of purchase:

Products	Warranty Period
• Garden Tractors	
Chassis	1 year limited warranty
Engine	2 year limited warranty
• 21" Commercial Duty Walk Mower with blade stop controls	1 year limited warranty
• Lawn Tractors, Yard Tractors, Rear Engine Riders, 3.0 and 3.5 HP Edgers, Straight Shaft Trimmers, and Backpack Blowers	90 day limited warranty
• All Others	45 day limited warranty

How Do You Get Warranty Service?

Should you feel your TORO product contains a defect in material or workmanship, contact the dealer who sold you the product or any Authorized TORO Service Dealer or TORO Master Service Dealer. The Yellow Pages of your telephone directory is a good reference source. The dealer will either arrange service at his/her dealership or recommend another Authorized Service Dealer who may be more convenient. You may need proof of purchase (copy of registration card, sales receipt, etc.) for warranty validation.

If for any reason you are dissatisfied with the Service Dealer's analysis of the defect in materials or workmanship or if you need a referral to a TORO Service Dealer, please feel free to contact us at the following address:

Toro Customer Service Department
8111 Lyndale Avenue South
Bloomington, MN 55420–1196
612–888–8801

What Must You Do To Keep The Warranty In Effect?

You must maintain your TORO Product by following the maintenance procedures described in the operator's manual. Such routine maintenance, whether performed by a dealer or by you, is at your expense.

What Does This Warranty Not Cover? and How Does Your State Law Relate To This Warranty?

There is no other express warranty except the TORO Starting Guarantee on GTS Engines. This express warranty does not cover:

- Cost of regular maintenance service or parts, such as filters, fuel, lubricants, tune–up parts, blade sharpening, brake and clutch adjustments.
- Any product or part which has been altered or misused or required replacement or repair due to normal wear, accidents, or lack of proper maintenance.
- Repairs necessary due to improper fuel, contaminants in the fuel system, or failure to properly prepare the fuel system prior to any period of non–use over three months.
- Pickup and delivery charges for distances beyond a 15 mile radius from an Authorized TORO Service Dealer (covered products only).

All repairs covered by this warranty must be performed by an Authorized TORO Service Dealer using Toro approved replacement parts.

Repair by an Authorized TORO Service Dealer is your sole remedy under this warranty.

The Toro Company is not liable for indirect, incidental or consequential damages in connection with the use of the TORO Products covered by this warranty, including any cost or expense of providing substitute equipment or service during reasonable periods of malfunction or non–use pending completion of repairs under this warranty. Some states do not allow exclusions of incidental or consequential damages, so the above exclusion may not apply to you.

This warranty gives you specific legal rights, and you may also have other rights which vary from state to state.

COUNTRIES OTHER THAN THE UNITED STATES OR CANADA

Customers who have purchased TORO products exported from the United States or Canada should contact their TORO Distributor (Dealer) to obtain guarantee policies for your country, province, or state. If for any reason you are dissatisfied with your Distributor's service or have difficulty obtaining guarantee information, contact the TORO importer. If all other remedies fail, you may contact us at The Toro Company.

PRINTER PROJECT NO. 8967 **PRINTED IN U.S.A.**