Form No. 3391-116 Rev A

52in Blower Kit

Groundsmaster® 200/3320/3280-D Traction Unit

Model No. 30502—Serial No. 315000001 and Up

Operator's Manual

Safety

Improper use or maintenance by the operator or owner can result in injury. To reduce the potential for injury, comply with these safety instructions and always pay attention to the safety alert symbol, which means CAUTION, WARNING, or DANGER-"personal safety instruction." Failure to comply with the instruction may result in personal injury or death.

⚠ WARNING

CALIFORNIA
Proposition 65 Warning

This product contains a chemical or chemicals known to the State of California to cause cancer, birth defects, or reproductive harm.

Before Operating

- Read and understand the contents of this manual before starting and operating the machine. Become familiar with all controls and know how to stop quickly.
- Never allow children to operate the machine. Do not allow adults to operate the machine without proper instruction. Only trained operators, skilled in slope operation and who have read this manual should operate this machine.
- Never operate machine when under the influence of drugs or alcohol.
- Lightning can cause severe injury or death. If lightning is seen or thunder is heard in the area, do not operate the machine; seek shelter.
- Remove all debris or other objects that might be picked up and thrown by cutter blades. Keep all bystanders away from the operating area.
- Keep all shields and safety devices in place. If a shield, safety device, or decal is defective or damaged, repair or replace it before operating machine. Also, tighten any loose nuts, bolts, and screws to insure machine is in safe operating condition.
- Do not wear loose fitting clothing because it could get caught in moving parts. Always wear long pants and substantial shoes. Wearing safety glasses, safety shoes, and a helmet is advisable and required by some local ordinances and insurance regulations.
- Be sure interlock switches are adjusted correctly so engine cannot be started unless traction pedal is released-neutral position-and PTO switch is in the **Disengaged** position.
- Fill fuel tank before starting the engine. Avoid spilling any fuel. Since fuel is flammable, handle it carefully.
  - Use an approved fuel container.
  - Do not fill fuel tank when engine is hot or running.
  - Do not smoke while handling fuel.
  - Fill fuel tank outdoors and up to about one inch (25 mm) from the top of the tank, not the filler neck.
  - Wipe up any spilled fuel.

While Operating

- Sit on the seat when starting the engine and operating the machine.
- Always make sure seat pivot retaining pin is installed.
- Before starting the engine:
  - Engage parking brake.
  - Make sure traction pedal is in neutral and PTO is in **Disengaged** position.
  - After engine is started, release parking brake and keep foot off traction pedal. Machine must not move. If movement is evident, the neutral return mechanism is adjusted incorrectly. Shut engine off and adjust until machine does not move when traction pedal is released.
- Do not run the engine in a confined area without adequate ventilation. Exhaust fumes are hazardous and could possibly be deadly.
- Maximum seating capacity is one person. Therefore, never carry passengers.
- Check carefully for overhead clearances before driving under any objects.
- The grass deflector or complete blower assembly must always be installed on cutting unit.
- Operator must be skilled and trained in how to drive on hillsides. Failure to use caution on slopes or hills may cause loss of control and vehicle to tip or roll, possibly resulting in personal injury or death.
- Traverse slopes carefully. Do not start or stop suddenly when traversing slopes or when traveling uphill or downhill.

© 2014—The Toro® Company
8111 Lyndale Avenue South
Bloomington, MN 55420

Register at www.Toro.com.

Original Instructions (EN)
All Rights Reserved

3391-116 A

- If engine stalls or machine loses headway and cannot make it to the top of a slope, do not turn machine around. Always back slowly straight down the slope.
- Using the machine demands the operator's complete attention. To prevent loss of control:
  - Operate only in daylight or when there is good artificial light.
  - Drive slowly.
  - Avoid sudden starts and stops.
  - Look behind machine before backing up.
  - Watch for holes or other hidden hazards.
  - Do not drive close to a sand trap, ditch, creek, or hazard.
  - Reduce speed when making sharp turns and when turning on a hillside.
  - The cutting deck must be lowered when going down slopes for steering control.
- The grass deflector must always be installed and in lowest position on the cutting unit when blower assembly is removed. This product is designed to drive objects into the ground where they lose energy quickly in grassy areas. However, don't take an injury risk! When a person or pet appears unexpectedly in or near the mowing area, **stop mowing**. Careless operation, combined with terrain angles, ricochets, or improperly positioned guards, can lead to thrown object injuries. Do not resume mowing until area is cleared.
- Never raise the cutting unit while the blades or other parts are rotating.
- If cutting blades strike a solid object or the machine vibrates abnormally, disengage PTO, move throttle to Slow, set parking brake, and shut engine off. Remove key from switch to prevent possibility of accidental starting. Check cutting unit, blower assembly and traction unit for damage and defective parts. Repair any damage before restarting the engine and operating the cutting unit. Assure cutting unit blades are in good condition and blade bolts are tightened to proper torque specifications (See Cutting Deck Operator's Manual).
- If the cutting unit discharge area or blower assembly ever plugs, disengage PTO and shut engine off before removing the obstruction.
- To stop machine, remove foot from traction pedal and use brakes. Gradually reversing the traction pedal can provide additional braking.
- Do not touch engine, muffler, or it adjacent shroud while engine is running or soon after it has stopped. These areas could be hot enough to cause a burn.
- Lower the cutting unit to the ground and remove key from switch whenever machine is left unattended.
- Before getting of the seat:
  - Move traction pedal to neutral position and remove foot from pedal.
  - Set the parking brake and disengage the PTO.
  - Shut the engine off and remove key from ignition switch. Wait for all movement to stop before getting off the seat.

Maintenance

- Remove key from ignition switch to prevent accidental starting of the engine when servicing, adjusting, or storing the machine.
- If major repairs are ever needed or assistance is desired, contact an Authorized Toro Distributor.
- To reduce potential fire hazard, keep the engine free of excessive grease, grass, leaves, and accumulations of dirt.
- Make sure machine is in safe operating condition by keeping nuts, bolts, and screws tight. Check all cutting unit blade mounting bolts frequently to assure they are tightened to proper torque specifications (See the *Cutting Deck Operator's Manual*).
- Make sure all hydraulic line connectors are tight, and all hydraulic hoses and lines are in good condition before applying pressure to the system.
- Keep body and hands away from pin hole leaks or nozzles that eject hydraulic fluid under high pressure. Use paper or cardboard, not hands, to search for leaks. Hydraulic fluid escaping under pressure can have sufficient force to penetrate skin and cause serious injury. If fluid is ejected into the skin, it must be surgically removed within a few hours by a doctor familiar with this form of injury or gangrene may result.
- Before disconnecting or performing any work on the hydraulic system, all pressure in system must be relieved by stopping engine and lowering implement to the ground.
- If the engine must be running to perform maintenance or an adjustment, keep clear of PTO shaft, cutting unit blades, and other moving parts.
- At the time of manufacture, the machine conformed to safety standards in effect for riding mowers. To ensure optimum performance and continued safety certification of the machine, use genuine TORO replacement parts and accessories. Replacement parts and accessories made by other manufacturers may result in non-conformance with the safety standards, and the warranty may be voided.

Safety and Instructional Decals

Safety decals and instructions are easily visible to the operator and are located near any area of potential danger. Replace any decal that is damaged or lost.

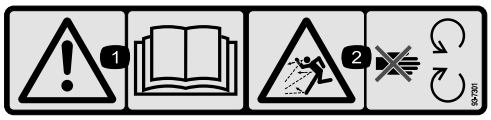

93-7301

1. Warning—read the Operator's Manual.
2. Thrown object hazard—stay away from moving parts.

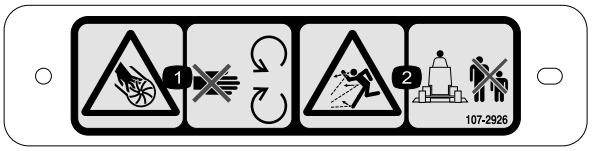

107–2926

1. Cutting/dismemberment hazard, impeller—stay away from moving parts.
2. Thrown object hazard—keep bystanders a safe distance from the machine.

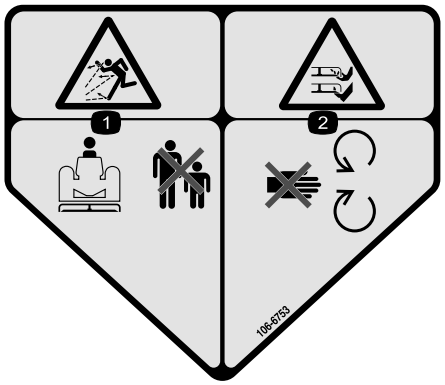

106–6753

1. Thrown object hazard—keep bystanders a safe distance from the machine.
2. Cutting/dismemberment hazard of hand or foot, mower blade—stay away from moving parts.

Setup

Loose Parts

Use the chart below to verify that all parts have been shipped.

Procedure	Description	Qty.	Use
1	No parts required	–	Remove the cutting unit from the traction unit.
2	Double-spindle pulley Pulley nut Nut cover	1 1 1	Install the new spindle pulley.
3	Pivot bracket	2	Remove/modify the grass deflector.
4	Front deflector Baffle Rear deflector Rear shelf Right shelf Capscrew (1/4–20 x 3/4 inch) Capscrew (5/16–18 x 5/8 inch) Capscrew (5/16–18 x 7/8 inch) Capscrew (3/8–16 x 1 inch) Carriage bolt (5/16–18 x 3/4 inch) Locknut Lockwasher	1 1 1 1 1 5 2 2 4 2 11 4	Mount the deck deflectors.
5	Blower Mounting bracket Bracket plate Belt Capscrew (5/16–18 x 3/4 inch) Carriage bolt (5/16–18 x 3/4 inch) Locknut	1 2 2 1 2 4 6	Install the blower mounting bracket and blower.
6	Idler assembly Capscrew (5/16–18 x 3/4 inch) Flat washer Locknut	1 3 3 3	Install the idler assembly.
7	Counterbalance spring assembly Capscrew (1/4–20 x 3/4 inch) Locknut	1 2 2	Install the counterbalance spring kit.
8	No parts required	–	Install the cutting unit to the traction unit.
9	Bumper Capscrew (1/2–13 x 1-1/2 inch) Capscrew (3/8–16 x 1 inch) Flange locknut (3/8 inch – 16)	1 2 2 2	
10	Warning decal	1	Install the warning decal.
11	Chute Locknut Chute bracket	1 4 4	Mount the blower housing chute.

1

Removing the Cutting Unit from the Traction Unit

No Parts Required

Procedure

The thrust washers, spacers, and tensioning caps have been installed on the castor wheel spindles for shipping.

1. Position the machine on a level surface, raise the cutting unit, engage the parking brake, ensure the traction pedal is in the Neutral position, move the PTO lever to the Off position, shut the engine off, and remove key from switch.

⚠ CAUTION

Counterbalance spring is in tension when deck is in lower position (200 Series traction units only).

Always raise deck before adjusting or removing spring.

2. On 200 Series traction units only, disconnect the counterbalance from the traction unit, remove the locking pins from the brackets, separate the spring tension assemblies from the brackets and lay them down on the deck (Figure 1).

   Note: Loosely secure the lock pins to the brackets to prevent losing them.

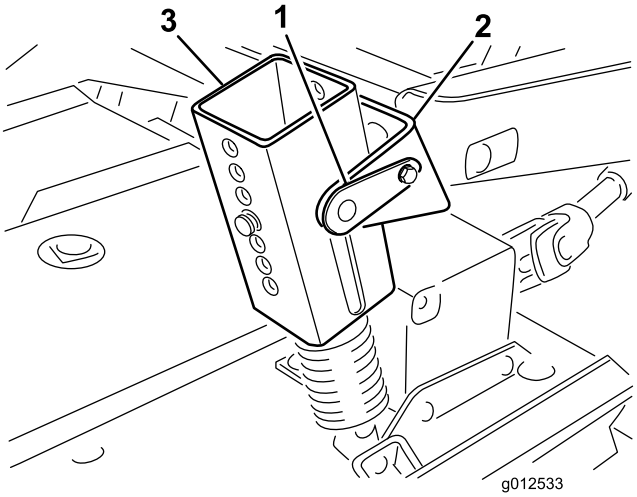

Figure 1

1. Lock pin
2. Bracket
3. Spring tension assembly
4. Height-of-cut pins

3. Lower the cutting unit, remove 4 pins from height-of-cut brackets (Figure 1).
4. Start the engine and raise the traction unit lift arms.
5. Stop the engine and slide the cutting unit away from the traction unit, separating the male and female sections of PTO shaft (Figure 2).

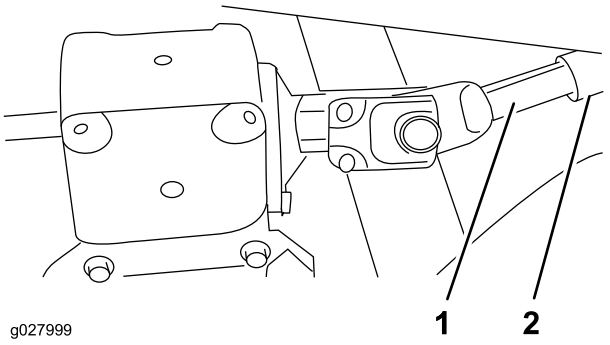

Figure 2

1. Male PTO shaft
2. Female PTO shaft

⚠ CAUTION

If the engine is started and the PTO shaft is allowed to rotate, serious injury could result.

Do not start the engine and engage the PTO switch when the PTO shaft is not connected to gear box on cutting unit.

2

Installing the New Spindle Pulley

Parts needed for this procedure:

1	Double-spindle pulley
1	Pulley nut
1	Nut cover

Procedure

1. Unhook the latches securing the right cover to the top of the cutting unit.
2. Remove the cover from the cutting unit.
3. Loosen 2 nuts securing the idler plate so that the tension of the idler pulley against the belt is released (Figure 3).

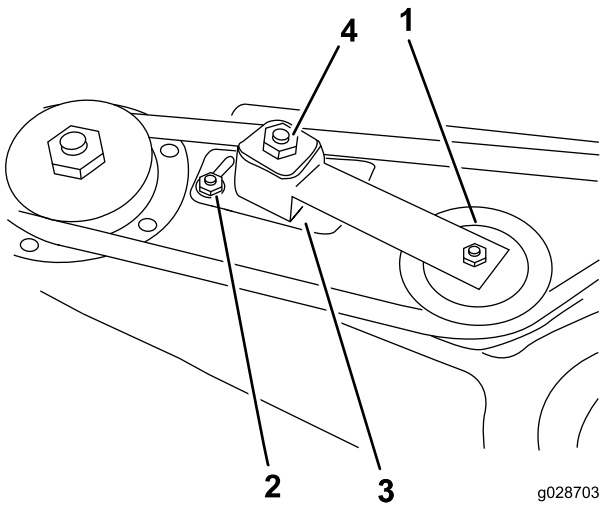

Figure 3

1. Idler pulley
2. Nut
3. Idler plate
4. Idler adjusting nut

4. Remove the belt from the right spindle pulley (Figure 4).
5. Remove the 6 carriage bolts and 6 flange nuts securing the spindle housing assembly and support ring to cutting unit (Figure 4). Retain the hardware.

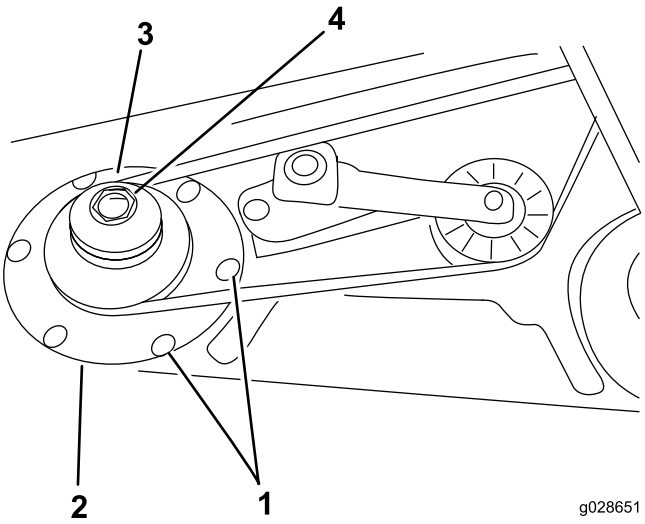

Figure 4

1. Carriage bolts
2. Support ring
3. Double spindle pulley
4. Pulley nut

6. Slide the spindle housing assembly out of the bottom of the cutting unit.
7. Remove the nut retaining pulley on spindle shaft.
8. Remove the pulley from shaft.
9. Slide the new double spindle pulley onto the spindle shaft Figure 4).

   Note: Do not install the pulley nut at this time.
10. Slide the pulley end of the spindle housing assembly through the hole in cutting unit, and loop the belt around pulley and idler.
11. Mount the spindle assembly in place with the support ring, 6 carriage bolts, and 6 flange nuts.
12. Install the new pulley nut onto the spindle shaft and tighten to 135.6 N-m (100 ft-lb).
13. Install the nut cover.
14. Tighten the idler adjusting nut to 33.9–40 N-m (25–30 ft-lb) to achieve proper belt tension.
15. Tighten the idler plate nuts.

3

Removing/Modifying the Grass Deflector

Parts needed for this procedure:

2	Pivot bracket

Procedure

1. Remove the capscrews, locknuts and springs securing the deflector mounts to the pivot brackets (Figure 5).
2. Remove the carriage bolts and flange nuts securing pivot brackets to the housing (Figure 5).

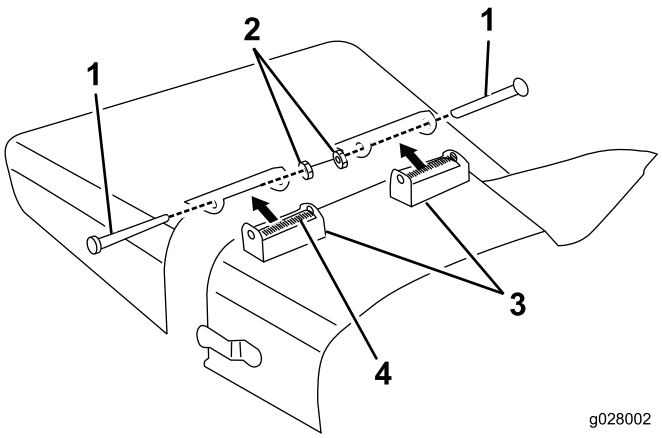

Figure 5

1. Capscrew
2. Locknut
3. Pivot bracket
4. Spring

3. Using capscrews, locknuts and springs previously removed, install the new pivot brackets to the deflector mounts (Figure 6).

   Note: Do not overtighten the nuts because the brackets must be allowed to pivot.

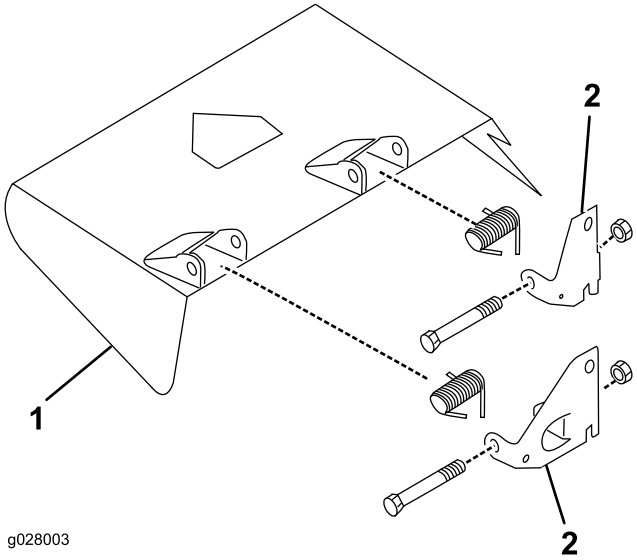

Figure 6

1. Grass deflector
2. Pivot bracket

4. Save this assembly for side discharge operation.

4

Mounting the Deck Deflectors

Parts needed for this procedure:

1	Front deflector
1	Baffle
1	Rear deflector
1	Rear shelf
1	Right shelf
5	Capscrew (1/4–20 x 3/4 inch)
2	Capscrew (5/16–18 x 5/8 inch)
2	Capscrew (5/16–18 x 7/8 inch)
4	Capscrew (3/8–16 x 1 inch)
2	Carriage bolt (5/16–18 x 3/4 inch)
11	Locknut
4	Lockwasher

Procedure

1. Mark and drill a 3/8-inch diameter hole through the center of the deflector stop (Figure 7).

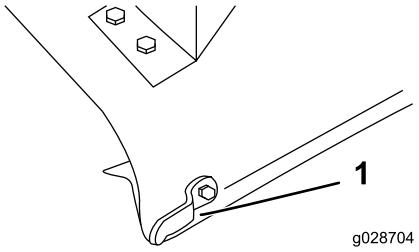

Figure 7

1. Deflector stop

2. Mount the end of front deflector to the deck with a capscrew (5/16–18 x 7/8 inch) and locknut (Figure 8)
3. Align the baffle with the edge of deck and use baffle as a template to mark and drill the 2 remaining 3/8-inch diameter holes in deck (Figure 8).
4. Secure the baffle to deck with 2 capscrews (5/16–18 x 5/8 inch) and 2 locknuts (Figure 8).

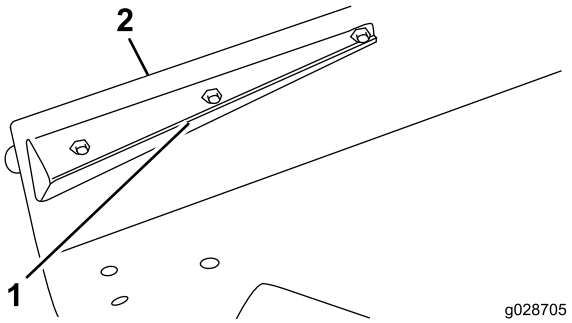

Figure 8

1. Front deflector
2. Edge of deck

5. Using the rear deflector as a template, mark and drill 3 holes (3/8-inch diameter) through the deck. Keep the deflector parallel to the deck's edge.
6. Secure the deflector to the deck with 2 carriage bolts (5/16 – 18 x 3/4 inch), 1 capscrew (5/16 – 18 x 7/8 inch) and 3 locknuts.
7. Align the rear deflector with corner of discharge opening (Figure 9).

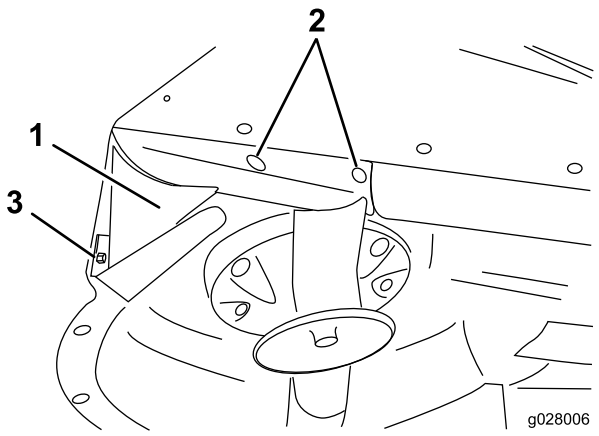

Figure 9

1. Rear deflector
2. Carriage bolts
3. Capscrew

8. Position the rear shelf on the deck (Figure 10).

Note: Use a long thin pencil or punch to mark 4 mounting holes in the deck. Holes may already be in the deck.

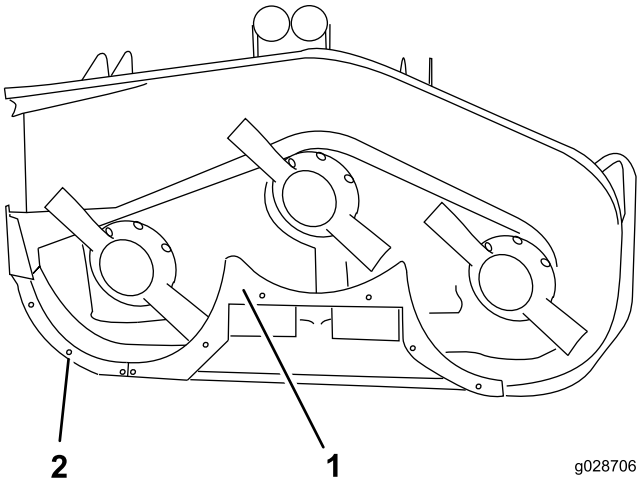

Figure 10

1. Rear shelf
2. Right shelf

9. Drill 4 holes (13/32 inch) in the deck, if required.
10. Mount the rear shelf to the deck with 4 capscrews (3/8–16 x 1 inch) and 4 lockwashers (Figure 10).
11. Using the rear shelf as a template, mark and drill 2 holes (9/32-inch diameter) through center of curved edge of deck (Figure 9).
12. Secure baffle to edge of deck with 2 capscrews (1/4–20 x 3/4 inch) and 2 locknuts (Figure 10).
13. Align right shelf with end of center baffle and edge of deck (Figure 10).
14. Mark and drill 3 holes (9/32-inch diameter) in center of curved edge of deck.
15. Secure the right shelf to deck with 3 capscrews (1/4–20 x 3/4 inch) and 3 locknuts.
16. Make sure that all the fasteners are tight. Carefully rotate the blades by hand to make sure that they clear the baffles.

5

Installing the Blower Mounting Brackets and Blower

Parts needed for this procedure:

1	Blower
2	Mounting bracket
2	Bracket plate
1	Belt
2	Capscrew (5/16–18 x 3/4 inch)
4	Carriage bolt (5/16–18 x 3/4 inch)
6	Locknut

Procedure

1. Position the blower and mounting brackets on the deck, aligning mounting holes with the holes previously used for mounting the grass deflector (Figure 11).

   Note: If the cutting unit was previously equipped with a bagger that required a large hole in discharge area of the deck, mount the cover plate (order part no. 44–5750 from an authorized Toro Distributor) between the bolt head and bottom side of the deck instead of the bracket plates.

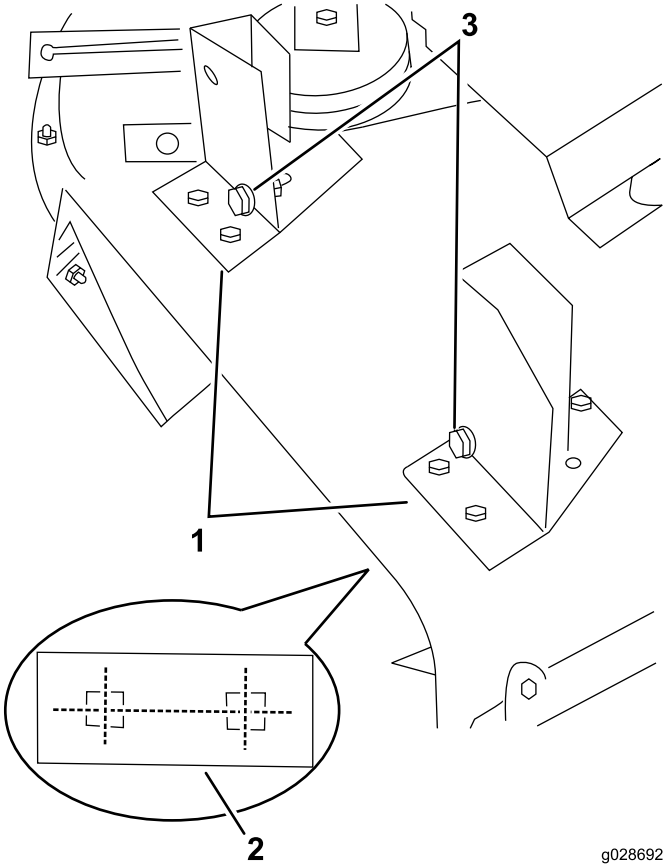

Figure 11

Blower not shown for clarity

1. Blower mounting brackets
2. Bracket plate (under the deck)
3. Alignment bolts

2. Making sure that no air gap exists between the blower and the cutting deck, secure each bracket to the deck with a bracket plate (Figure 11), 2 carriage bolts (5/16–18 x 3/4 inch) and 2 locknuts.
3. Position the bracket plates between the bolt head and bottom side of the deck.
4. Using each bracket as a template, mark the location of the third mounting hole (left rear position) (Figure 12).
5. Remove the 2 knobs securing the blower to the mounting brackets.
6. Remove the blower.
7. Drill a 3/8-inch diameter hole for each bracket and secure with a capscrew (5/16 –18 x 3/4-inch) and locknut (Figure 12).
8. Route the belt around the small spindle pulley.
9. Slide the blower onto the mounting bracket alignment bolts (Figure 11) while routing the belt around blower pulley.

   Note: If the blower assembly does not easily slide onto the mounting brackets, loosen the alignment bolts slightly.

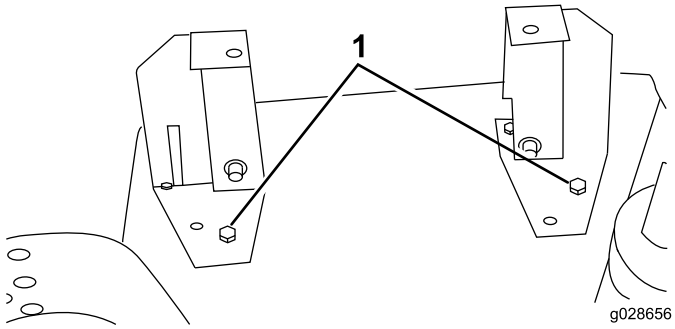

Figure 12

1. Left rear mounting hole with capscrew

10. Secure the blower to the brackets with 2 knobs.

6

Installing the Idler Assembly

Parts needed for this procedure:

1	Idler assembly
3	Capscrew (5/16–18 x 3/4 inch)
3	Flat washer
3	Locknut

Procedure

1. Position the idler assembly on the deck (Figure 13).
2. Using the dimensions shown in Figure 13, inset, locate, mark and drill 3 holes (3/8-inch diameter) in the deck.
3. Engage the idler lever (toward belt) and slide the idler pulley firmly into blower belt. To provide for future adjustment, there should be at least 0.64 cm (1/4 inch) clearance between front of idler mounting bracket and raised rib in deck (Figure 13) The mounting bracket should be positioned on flat part of deck.

   Note: Make sure that the idler pulley clears spindle pulley and the blower and idler lever clears the carrier frame when in the engaged position. The mounting bracket should be at approximately 15 degrees to the deck rib (Figure 13).

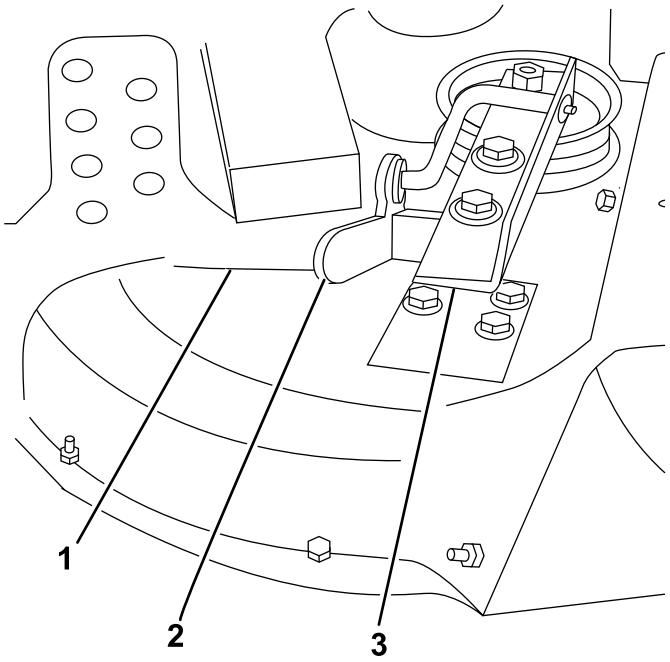

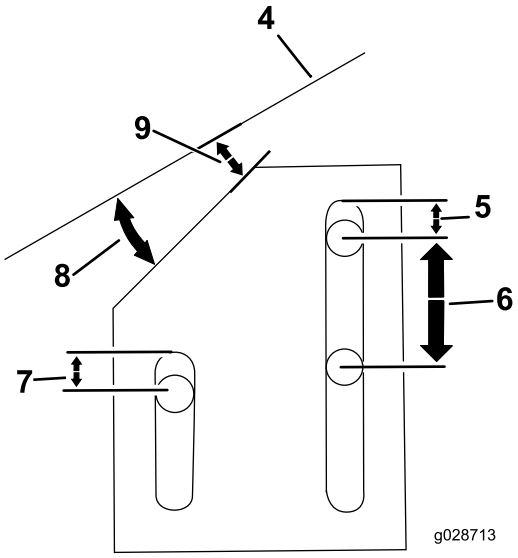

Figure 13

1. Raised rib in deck
2. Idler lever
3. Idler assembly
4. Deck rib
5. 0.64 cm (1/4 inch)
6. 2.53 cm (1 inch)
7. 0.64 cm (1/4 inch)
8. 15 degrees
9. 0.64 cm (1/4 inch)

4. Disengage the idler lever and mount idler assembly to the deck with 3 capscrews (5/16–18 x 3/4-inch), 3 flat washers, and 3 locknuts.
5. Position the flat washers between the nut and idler assembly.
6. Engage the idler lever and check belt tension.

   Note: Adjust if necessary.

7

Installing the Counterbalance Spring Kit

Parts needed for this procedure:

1	Counterbalance spring assembly
2	Capscrew (1/4–20 x 3/4 inch)
2	Locknut

Procedure

The counterbalance spring kit must be installed before operating the blower kit.

1. Install the mounting bracket to front of traction unit using mounting holes shown in Figure 14.

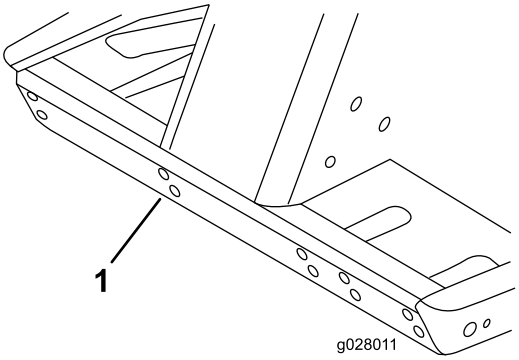

Figure 14

1. Use this set of mounting holes for bracket

2. Install counterbalance spring assembly to the mounting bracket with lock pins.
3. Install the new belt cover and latch it in place.
4. Using dimensions shown in Figure 15, locate the mounting position for the spring bracket on the cutting deck.

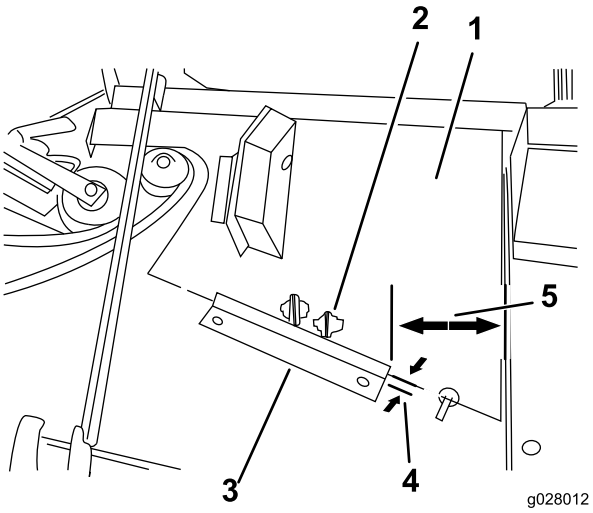

Figure 15

1. New belt cover
2. Use this mounting bracket
3. Spring bracket
4. 0.16 cm (1/16 inch)
5. 10.46 cm (4-1/8 inch)

5. Parallel the bracket and position it 1/16 inch from front edge of the belt cover.
6. Using the spring bracket as a template, mark and drill 2 holes (9/32-inch diameter) in the cutting deck.
7. Secure the spring bracket to the deck with 2 capscrews (1/4–20 x 3/4-inch) and 2 locknuts.

8

Installing the Cutting Unit to the Traction Unit

No Parts Required

Procedure

1. Engage the parking brake, and ensure that the traction pedal is in neutral and PTO lever is in OFF position.
2. Start the engine and raise frame. Stop the engine.
3. Remove the clevis pins and hairpin cotters from forward and rear height-of-cut brackets.
4. Position the cutting unit under frame. Align gear case input shaft with PTO shaft and install the shaft.
5. Carefully lower the carrier frame. Align the PTO shaft hole with gear case input shaft hole and install roll pin. Tighten the bolts and locknuts.
6. Install the clevis pins through the desired holes in frame and desired height–of–cut bracket holes.

   Note: Secure the clevis pins with the hairpin cotters.

7. Start the engine and raise the frame. Secure the counterbalance spring knee link to cutting unit spring bracket with the shoulder bolt and locknut previously removed (Figure 16).

   Note: Make sure to mount the counterbalance to the proper tab on cutting unit spring bracket (Figure 15).

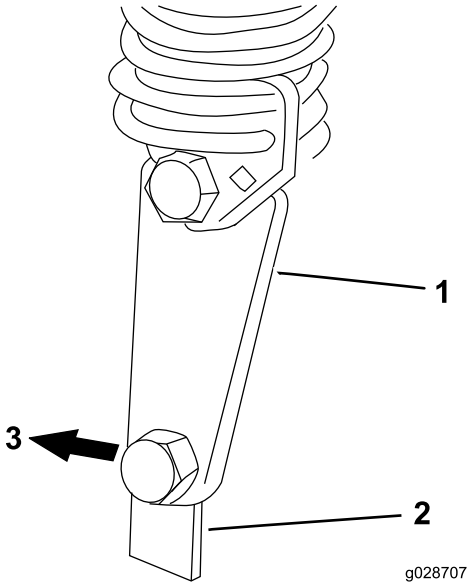

Figure 16

1. Counterbalance spring knee link
2. Deck-mounting bracket
3. Rear of the deck

9

Installing the Bumper

Parts needed for this procedure:

1	Bumper
2	Capscrew (1/2–13 x 1-1/2 inch)
2	Capscrew (3/8–16 x 1 inch)
2	Flange locknut (3/8 inch – 16)

Procedure

1. Place the cutting unit in highest height–of–cut position; refer to cutting unit's *Operator's Manual*.
2. On right side of carrier frame, remove 2 forward capscrews (1/2–13 x 1-1/2 inch) securing the carrier frame to the lift arm (Figure 17).
3. Align the rear of the bumper with the 2 holes, and center punch and drill 2 holes (13/32-inch diameter) for the front bumper bracket in the carrier frame channel.

4. Mount the bumper and secure it with 2 capscrews (1/2–13 x 1–1/2 inch) at the lift arm/carrier frame connection and 2 capscrews (3/8–16 x 1 inch) and 2 flange locknuts (3/8 inch – 16) at the front bracket location. Torque the capscrews (1/2–13 x 1-1/2 inch) to 95–108 Nm (70–80 ft–lb) (Figure 17).

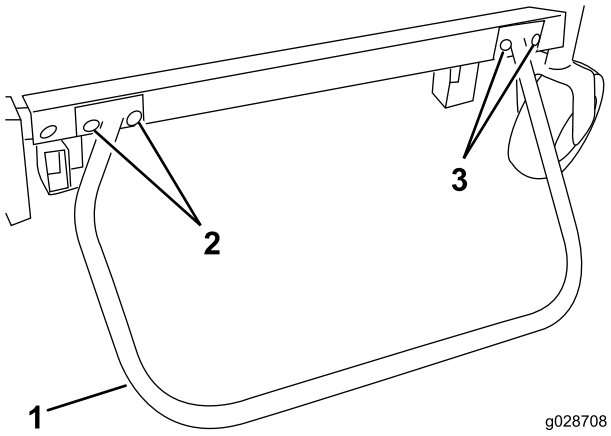

Figure 17

1. Bumper
2. Capscrews (1/2–13 x 1-1/2 inch)
3. Capscrews (3/8–16 x 1 inch) and flange locknuts

10

Installing the Warning Decal

Parts needed for this procedure:

1	Warning decal

Procedure

Install the warning decal to the cutter deck either under the right hand carrier frame member or inside it.

11

Mounting the Blower Housing Chute

Parts needed for this procedure:

1	Chute
4	Locknut
4	Chute bracket

Procedure

Important: When the chute in the Blower Kit is used with a 15 cubic foot Hopper Kit, you must cut off a section of the chute to assure proper fit between the blower and the hopper. If used with another kit, proceed to step 3.

1. Using the dimensions shown in Figure 18, use a tape measure and mark the chute.

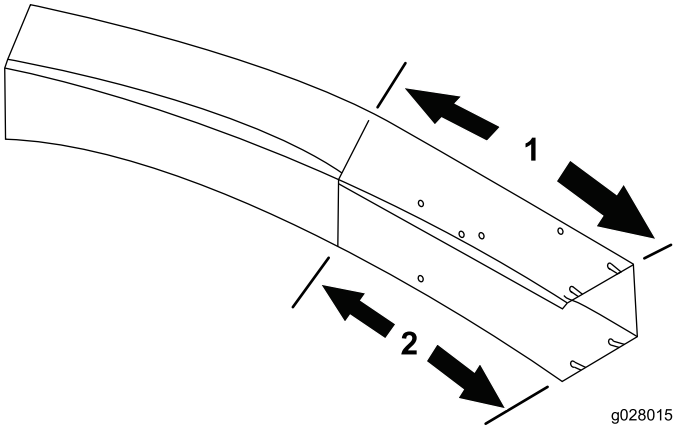

Figure 18

1. 45.72 cm (18 inches)
2. 31.75 cm (12-1/2 inches)

2. Draw lines around all sides of the chute and cut off with a saw.
3. Set the deck into desired height–of–cut setting.
4. Slide chute over the blower opening and onto mounting studs (Figure 19).
5. Lower the hopper hood and align chute with hood snout.

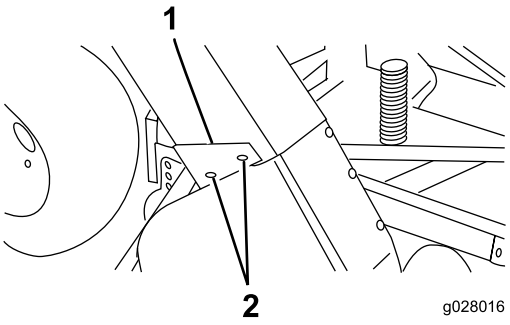

Figure 19

1. Chute
2. Mounting stud
3. Chute brackets

6. Secure the chute in position with 4 locknuts (5/16 inch) and 4 chute brackets.
7. Wide end of the brackets to be positioned to rear.

Operation

Operating Characteristics

Note: When used with a 15 cubic foot Hopper kit.

⚠ CAUTION

When grass collector is removed, never operate without deflector in place.

For best performance, regulate the traction pedal to keep the engine rpm high and somewhat constant. A good rule to follow is decrease the ground speed as the load on the cutting blade increases and increase the ground speed as the load on the blade decreases. This allows the engine, working with the transmission, to sense the proper ground speed while maintaining high blade-tip speed necessary for good quality-of-cut, vacuuming action, and to throw grass into hopper. If blower speed drops too low, plugging may result. Refer to Cutting Unit and Traction Unit *Operator's Manual* for operation of each.

⚠ CAUTION

Use care to avoid collision between hopper and any stationary objects. Always trim with left side of cutting unit.

1. This grass collector is designed for use in wet or dry conditions. Do not collect extremely long grass as the hopper will fill too quickly.
2. When bagging wet, heavy grass, some clippings may not be thrown completely through the chute. The hole in the bottom of the chute allows these clippings to drop out without plugging the chute. When this happens, reduce ground speed.
3. The bumper which protects the blower housing doesn't extend far enough to eliminate the chance of the bagger striking a stationary object. Stay far enough away from obstructions to avoid collisions. Trim with left side of cutting unit only.
4. The grass deflector hood is designed to exhaust air beside the the hopper rather than through it. This allows the hopper to fill completely without decreasing performance. Grass will fall through the opening in the front of the hood when the hopper is full. Immediately disengage the power take off, set brake and shut off ignition. Empty the hopper. Failure to empty the hopper will plug the chute.
5. Optional Hi–sail blades (Toro part no. 44–5480) will give improved performance in wet cutting conditions.

⚠ DANGER

Never place hands or feet in chute, blower, or cutting unit.

6. Cut grass often, especially when it grows rapidly. If shorter turf is desired, cut the grass again. Overlap the swaths to produce an even cutting pattern.

Removing the Blower

1. Shut the engine off, disengage the idler unlatch and open the belt cover and lift belt off the spindle pulley.
2. Close the cover. Remove 2 knobs securing blower to mounting brackets and remove blower, belt and chute.
3. Reverse the procedure to install the blower assembly.

Using the Grass Deflector

1. Remove bumper from carrier frame. Install the 2 lift arm/carrier frame connection capscrews. Torque to 95–108 N-m (70–80 ft–lb).
2. Slide the grass deflector and pivot brackets onto the alignment bolts and secure to the mounting brackets with knobs and washers (Figure 20).

   Note: If the blower assembly or grass deflector do not easily slide on or off mounting brackets, loosen alignment bolts slightly.
3. Lift the deflector and allow it to drop to check the spring tension.

⚠ CAUTION

When the grass collector is removed, never operate the machine without the deflector in place.

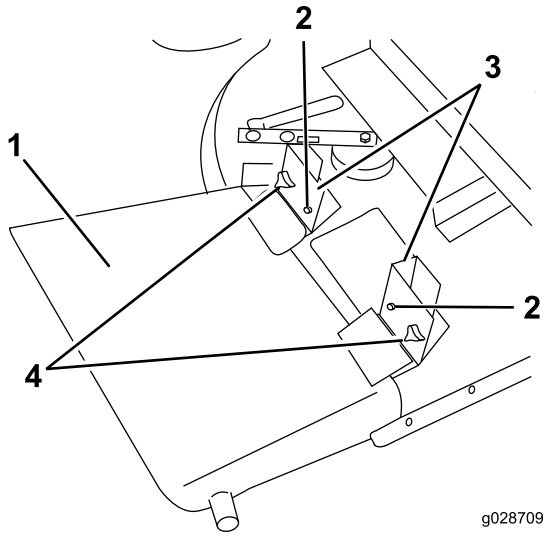

Figure 20

1. Grass deflector
2. Knob and washer
3. Mounting bracket

Maintaining the Machine

- Keep unit clean. Assure engine is free of dirt and chaff. Make sure all fasteners are tight. Check deflectors, baffles and shields for wear and replace as needed.
- Check blower gearbox impeller for tightness every 50 hours. Torque impeller shaft bolt to 298.2–311 N-m (220 – 230 in-lb).
- Clean grass clippings from hood, chute, blower and cutting unit after each use. Wash underside of cutting unit daily with hose. An excessive buildup of clippings will impair collection system performance.
- Check belt tension and wear every 50 hours. To adjust belt tension, loosen idler mounting screws, engage idler lever and push idler pulley firmly into blower belt. Tighten mounting screws.
- The blower gear box should need little maintenance. Check for leakage every 50 hours. If leakage should occur, replace seals and refill with 59 ml (2 oz) of high quality moly disulfide grease. Pack bearings with this grease before assembling.
- Refer to the Cutting Unit and Traction Unit *Operator's Manual* for service requirements of each.

Toro General Commercial Product Warranty

A Two-Year Limited Warranty

Conditions and Products Covered

The Toro Company and its affiliate, Toro Warranty Company, pursuant to an agreement between them, jointly warrant your Toro Commercial product ("Product") to be free from defects in materials or workmanship for two years or 1500 operational hours*, whichever occurs first. This warranty is applicable to all products with the exception of Aerators (refer to separate warranty statements for these products). Where a warrantable condition exists, we will repair the Product at no cost to you including diagnostics, labor, parts, and transportation. This warranty begins on the date the Product is delivered to the original retail purchaser.
* Product equipped with an hour meter.

Instructions for Obtaining Warranty Service

You are responsible for notifying the Commercial Products Distributor or Authorized Commercial Products Dealer from whom you purchased the Product as soon as you believe a warrantable condition exists. If you need help locating a Commercial Products Distributor or Authorized Dealer, or if you have questions regarding your warranty rights or responsibilities, you may contact us at:

Toro Commercial Products Service Department
Toro Warranty Company
8111 Lyndale Avenue South
Bloomington, MN 55420-1196

952–888–8801 or 800–952–2740
E-mail: commercial.warranty@toro.com

Owner Responsibilities

As the Product owner, you are responsible for required maintenance and adjustments stated in your *Operator's Manual*. Failure to perform required maintenance and adjustments can be grounds for disallowing a warranty claim.

Items and Conditions Not Covered

Not all product failures or malfunctions that occur during the warranty period are defects in materials or workmanship. This warranty does not cover the following:

- Product failures which result from the use of non-Toro replacement parts, or from installation and use of add-on, or modified non-Toro branded accessories and products. A separate warranty may be provided by the manufacturer of these items.
- Product failures which result from failure to perform recommended maintenance and/or adjustments. Failure to properly maintain your Toro product per the Recommended Maintenance listed in the *Operator's Manual* can result in claims for warranty being denied.
- Product failures which result from operating the Product in an abusive, negligent, or reckless manner.
- Parts subject to consumption through use unless found to be defective. Examples of parts which are consumed, or used up, during normal Product operation include, but are not limited to, brake pads and linings, clutch linings, blades, reels, rollers and bearings (sealed or greasable), bed knives, spark plugs, castor wheels and bearings, tires, filters, belts, and certain sprayer components such as diaphragms, nozzles, and check valves, etc.
- Failures caused by outside influence. Conditions considered to be outside influence include, but are not limited to, weather, storage practices, contamination, use of unapproved fuels, coolants, lubricants, additives, fertilizers, water, or chemicals, etc.
- Failure or performance issues due to the use of fuels (e.g. gasoline, diesel, or biodiesel) that do not conform to their respective industry standards.
- Normal noise, vibration, wear and tear, and deterioration.
- Normal "wear and tear" includes, but is not limited to, damage to seats due to wear or abrasion, worn painted surfaces, scratched decals or windows, etc.

Parts

Parts scheduled for replacement as required maintenance are warranted for the period of time up to the scheduled replacement time for that part. Parts replaced under this warranty are covered for the duration of the original product warranty and become the property of Toro. Toro will make the final decision whether to repair any existing part or assembly or replace it. Toro may use remanufactured parts for warranty repairs.

Deep Cycle and Lithium-Ion Battery Warranty:

Deep cycle and Lithium-Ion batteries have a specified total number of kilowatt-hours they can deliver during their lifetime. Operating, recharging, and maintenance techniques can extend or reduce total battery life. As the batteries in this product are consumed, the amount of useful work between charging intervals will slowly decrease until the battery is completely worn out. Replacement of worn out batteries, due to normal consumption, is the responsibility of the product owner. Battery replacement may be required during the normal product warranty period at owner's expense. Note: (Lithium-Ion battery only): A Lithium-Ion battery has a part only prorated warranty beginning year 3 through year 5 based on the time in service and kilowatt hours used. Refer to the *Operator's Manual* for additional information.

Maintenance is at Owner's Expense

Engine tune-up, lubrication, cleaning and polishing, replacement of filters, coolant, and completing recommended maintenance are some of the normal services Toro products require that are at the owner's expense.

General Conditions

Repair by an Authorized Toro Distributor or Dealer is your sole remedy under this warranty.

Neither The Toro Company nor Toro Warranty Company is liable for indirect, incidental or consequential damages in connection with the use of the Toro Products covered by this warranty, including any cost or expense of providing substitute equipment or service during reasonable periods of malfunction or non-use pending completion of repairs under this warranty. Except for the Emissions warranty referenced below, if applicable, there is no other express warranty. All implied warranties of merchantability and fitness for use are limited to the duration of this express warranty.

Some states do not allow exclusions of incidental or consequential damages, or limitations on how long an implied warranty lasts, so the above exclusions and limitations may not apply to you. This warranty gives you specific legal rights, and you may also have other rights which vary from state to state.

Note regarding engine warranty:

The Emissions Control System on your Product may be covered by a separate warranty meeting requirements established by the U.S. Environmental Protection Agency (EPA) and/or the California Air Resources Board (CARB). The hour limitations set forth above do not apply to the Emissions Control System Warranty. Refer to the Engine Emission Control Warranty Statement supplied with your product or contained in the engine manufacturer's documentation for details

Countries Other than the United States or Canada

Customers who have purchased Toro products exported from the United States or Canada should contact their Toro Distributor (Dealer) to obtain guarantee policies for your country, province, or state. If for any reason you are dissatisfied with your Distributor's service or have difficulty obtaining guarantee information, contact the Toro importer.

374-0253 Rev C