Form No. 3387-880 Rev B

Backfill Blade Kit

RT1160 or RT1200 Trencher

Model No. 131-1286

Installation Instructions

⚠ WARNING

CALIFORNIA
Proposition 65 Warning

This product contains a chemical or chemicals known to the State of California to cause cancer, birth defects, or reproductive harm.

Safety

Safety and Instructional Decals

Safety decals and instructions are easily visible to the operator and are located near any area of potential danger. Replace any decal that is damaged or lost.

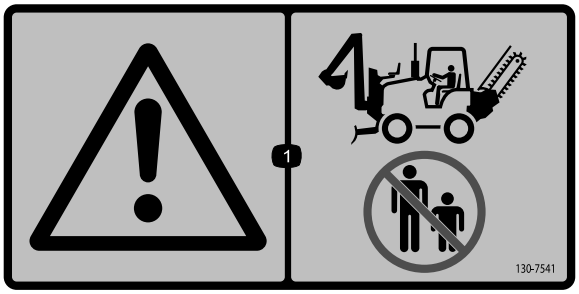

130-7541

1. Warning—keep bystanders away from the machine.

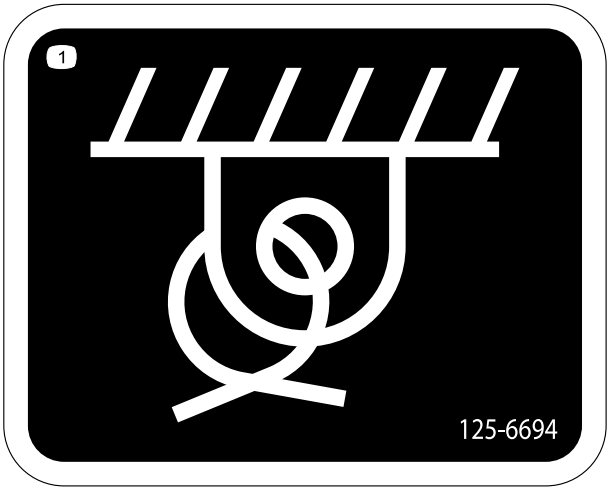

125-6694

1. Tie-down point

© 2014—The Toro® Company
8111 Lyndale Avenue South
Bloomington, MN 55420

Register at www.Toro.com.

Original Instructions (EN)
Printed in the USA
All Rights Reserved

3387-880 B

Loose Parts

Use the chart below to verify that all parts have been shipped.

Procedure	Description	Qty.	Use
1	No parts required	–	Prepare to install the backfill blade to the machine.
2	Pivot cylinder—retracted length 41.3 cm (16.25 inch); rod diameter 38.1 mm (1.5 inch) T-fitting (3/8 inch) Cross-connect hose (1/4 x 20 inch) Mounting frame Bolt (1 x 3-1/2 inch) Washer (1 inch) Locknut (1 inch) Bolt (1 x 2-1/2 inch)	2 2 2 1 2 4 4 4	Install the support frame.
3	Pins (1-1/4 x 7-5/8 inch) Snap rings (1-1/8 inch) Washers (1 x 5/16 inch)	2 4 4	Assemble the pivot cylinders to the mounting frame.
4	No parts required	–	Connect the pivot cylinder hoses.
5	Pivot frame Washers (1 x 5/8 inch) Pivot pin (1-1/2 x 15-1/2 inch) Snap ring (1-3/8 inch) Pins (1-1/4 x 7-5/8 inch) Snap rings (1-1/8 inch)	1 3 1 2 2 4	Install the pivot frame.
6	Lift-arm assembly Pin (1-1/2 x 5-1/4 inch) Snap ring (1-3/8 inch) Lift cylinder—retracted length 51.4 cm (20.25 inch); rod diameter 38.1 mm (1.5 inch) Clevis pin (1-1/4 x 4-7/16 inch) Hairpin	1 2 4 1 2 2	Install the blade arms.
7	Backfill blade Retainer plate Bolt (5/8 x 1-1/2 inch) Washer (5/8 inch) Retained shim Tilt cylinder—retracted length 51.4 cm (20.25 inch); rod diameter 44.5 mm (1.75 inch) Clevis pin (1-1/4 x 4-7/16 inch) Hairpin	1 2 6 12 8 1 2 2	Install the backfill blade.

Procedure	Description	Qty.	Use
8	Lift cylinder extend hose (3/8 x 23 inches)	1	Install the hydraulic hoses.
	Lift cylinder retract hose (3/8 x 31-1/4 inch)	1	
	Tilt cylinder extend hose (3/8 x 49-1/4 inch)	1	
	Tilt cylinder retract hose (3/8 x 62-1/4 inch)	1	
	Clamp block (2-hose)	4	
	Bolt (3/8 x 1-3/4 inch)	2	
	Washer (3/8 inch)	2	
	Cover plate	2	
	Cable tie	1	
9	No parts required	–	Bleed the hydraulic system for the backfill blade.
10	No parts required	–	Install the nose panel and side panels.

1

Preparing to Install the Backfill Blade to the Machine

No Parts Required

Preparing the Machine

1. Move the machine to a level surface and set the parking brake.
2. If your machine has the tilting frame feature, perform the following steps to lock the axle and frame together:
   A. Use the tilt switch to align the hole in the chassis-lockout bracket with the holes in the axle-lockout bracket (Figure 1 and Figure 2).

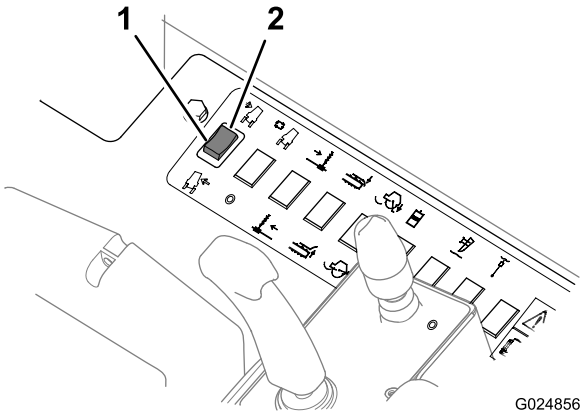

Figure 1

1. Tilt the machine right
2. Tilt the machine left

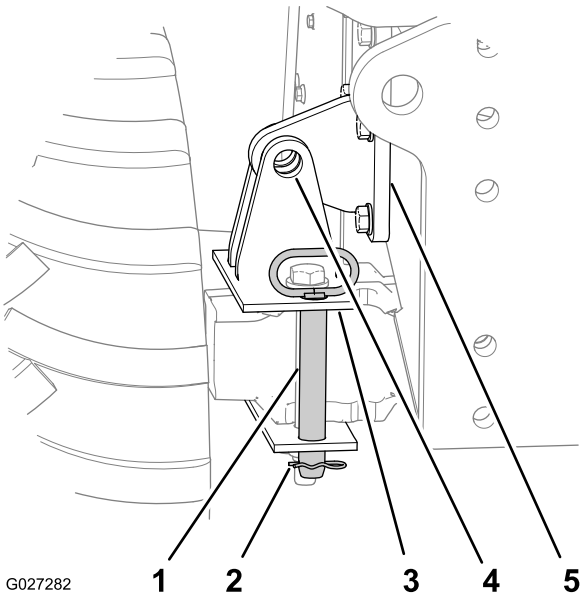

Figure 2

1. Tilt-lockout pin (stowed position shown)
2. Hairpin
3. Axle-lockout bracket (vertical holes)
4. Hole—axle-lockout bracket
5. Chassis-lockout bracket

   B. Remove the hairpin from the tilt-lockout pin (Figure 2).
   C. Remove the tilt-lockout pin from the stowed position (Figure 2).
   D. Fully insert the tilt-lockout pin through the horizontal holes in the chassis-lockout bracket and axle-lockout bracket (Figure 2).
   E. Secure the tilt-lockout pin to the axle-lockout bracket with the hairpin (Figure 2).
3. Shutoff the engine, and allow the machine to cool.

4. At the front of the machine, clean the bottom of the frame plate and the front axle support as shown in Figure 3.

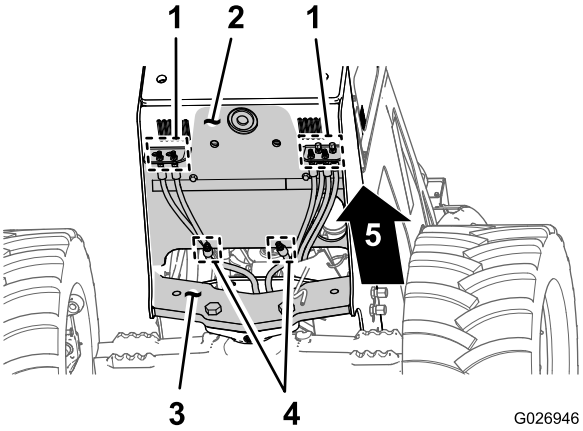

Figure 3

1. Bulkhead fittings
2. Bottom frame plate
3. Front axle support
4. Hose fittings
5. Front of the machine

5. Clean the bulkhead fittings and the hose fittings as shown in Figure 3.

Removing the Nose Panel

1. Remove the side panels (Figure 4), refer to the *Operator's Manual*.

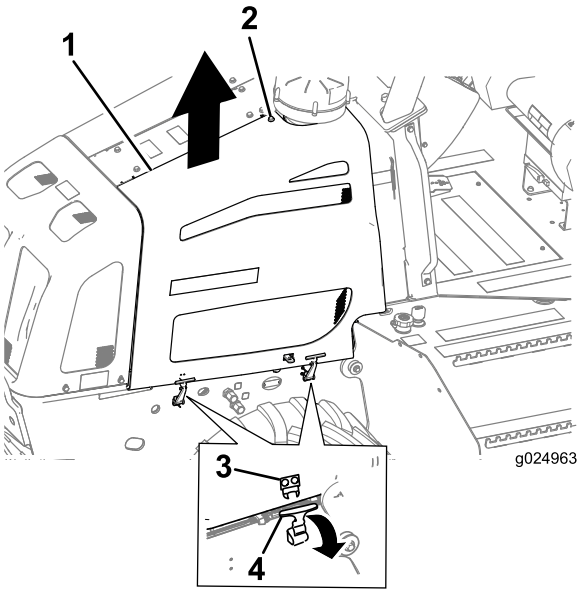

Figure 4

Rubber latch handles shown

1. Side panel
2. Bolt
3. Anchor bracket
4. Panel latch

2. Remove the 4 flanged-head bolts (10 x 30 mm) that secure the nose panel to the frame of the machine (Figure 5).

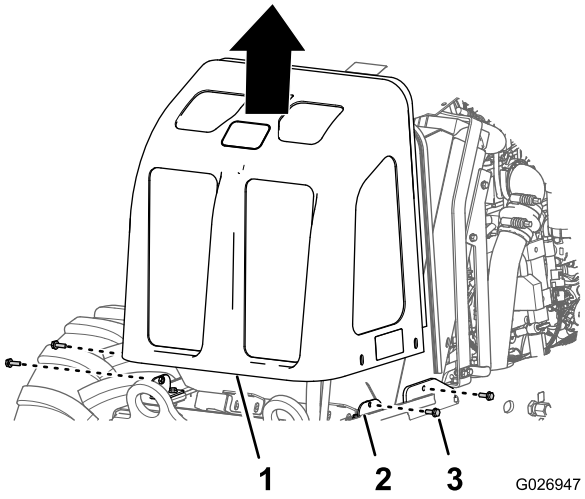

Figure 5

1. Nose panel
2. Flanged-head bolt (10 x 30 mm)
3. Frame

3. Tilt the nose panel forward and then lift it up off the machine (Figure 5).

2

Installing the Support Frame

Parts needed for this procedure:

2	Pivot cylinder—retracted length 41.3 cm (16.25 inch); rod diameter 38.1 mm (1.5 inch)
2	T-fitting (3/8 inch)
2	Cross-connect hose (1/4 x 20 inch)
1	Mounting frame
2	Bolt (1 x 3-1/2 inch)
4	Washer (1 inch)
4	Locknut (1 inch)
4	Bolt (1 x 2-1/2 inch)

Preparing Pivot Cylinders

Pivot cylinder weight: 14 kg (30 lb)

Note: The retracted length of the pivot cylinders are 41.3 cm (16.25 inch) and the rod diameter is 38.1 mm (1.5 inch).

1. Remove the shipping plug from the extend port of a pivot cylinder (Figure 6).

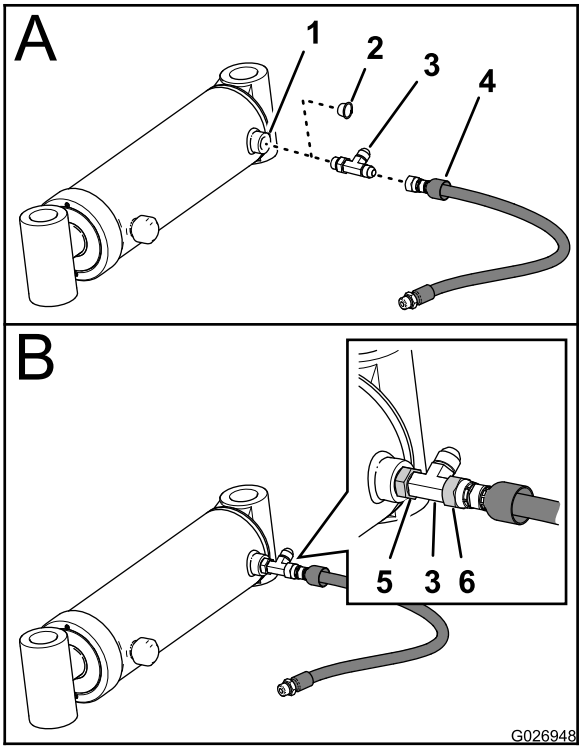

Figure 6

1. Extend port (pivot cylinder)
2. Shipping plug
3. T-fitting (3/8 inch)
4. Cross-connect hose (1/4 x 20 inch)
5. Swivel nut (T-fitting)
6. Swivel nut (hose)

2. Install a T-fitting (3/8 inch) into the extend port (Figure 6) and tighten the swivel nut of the fitting hand tight.
3. Install a cross-connect hose (1/4 x 20 inch) onto the T-fittings as shown in Figure 6.
4. Tighten the swivel nut of the hose finger tight.
5. Repeat steps 1 through 4 for the other pivot cylinder, T-fitting, and hose (1/4 x 20 inch).

Disconnecting the Hydraulic Hoses from the Bulkhead Panels

1. At the front of the machine, carefully identify and uniquely mark the position of the hoses at the left and right bulkhead panels (Figure 7).

   Note: The 2 hoses that are not attached to either bulkhead panel are for the pivot cylinders.

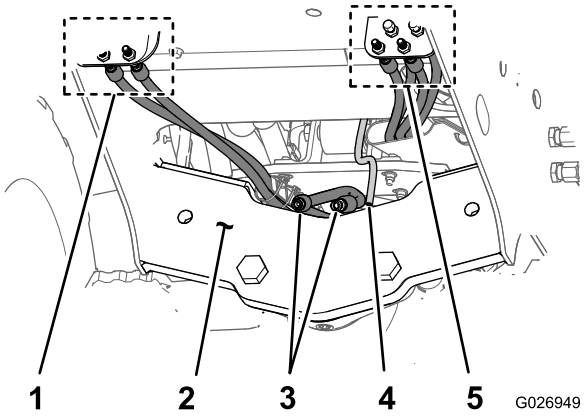

Figure 7

1. Hoses (right bulkhead panel)
2. Front axle support
3. Pivot-cylinder hoses (rotate left and rotate right)
4. Drain hose (coolant reservoir)
5. Hoses (left bulkhead panel)

2. Remove the hoses from the fittings left and right bulkhead panels and cap the hoses (Figure 7).

   Note: You will connect the hoses to the bulkhead panels after you install the mounting frame.

Installing the Mounting Frame (Machines without a Mounting Frame for the Backfill Blade)

Mounting frame weight: 103 kg (226 lb)

1. Place the mounting frame onto lifting equipment with a 103 kg (226 lb) capacity.
2. Align the 2 horizontal 25 mm (1 inch) holes in the mounting frame with the 2 horizontal holes in the front axle support (Figure 8).

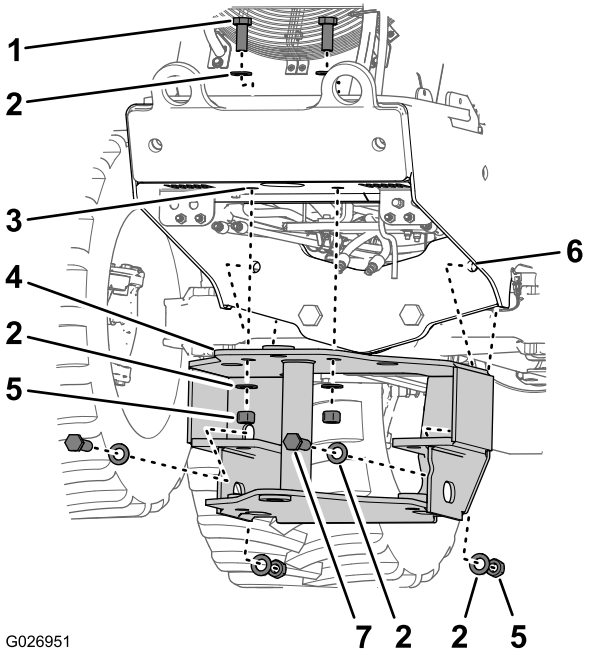

Figure 8

1. Bolt (1 x 2-1/2 inch)
2. Washer (1 inch)
3. Hole (bottom frame plate)
4. Mounting frame
5. Locknut (1 inch)
6. Hole (front axle support)
7. Bolt (1 x 3-1/2 inch)

3. Align the 2 vertical 25 mm (1 inch) holes in the mounting frame with the 2 vertical in the bottom frame plate of the machine (Figure 8).
4. Assemble 2 bolts (1 x 3-1/2 inch), 2 washers (1 inch), and 2 locknuts (1 inch) through the horizontal holes in the mounting frame and the front axle support (Figure 8, Figure 9, and Figure 10).

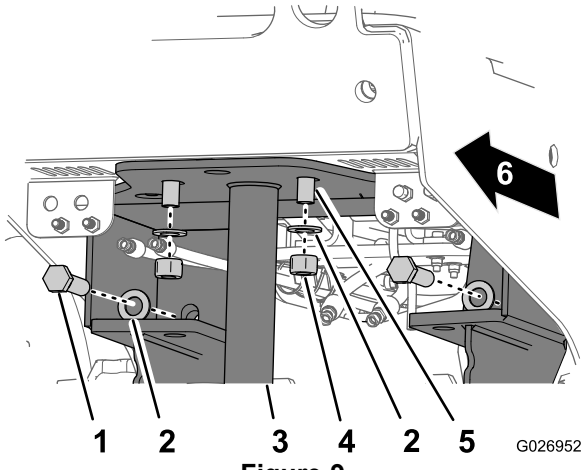

Figure 9

1. Bolt (1 x 3-1/2 inch)
2. Mounting frame
3. Locknut (1 inch)
4. Washer (1 inch)
5. Bolt (1 x 2-1/2 inch)
6. Front of the machine

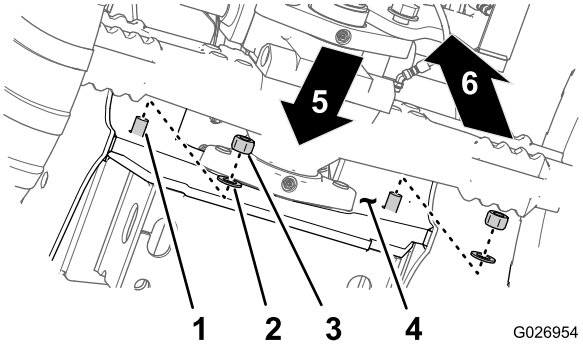

Figure 10

1. Bolt (1 x 3-1/2 inch)
2. Washer (1 inch)
3. Locknut (1 inch)
4. Hole (front axle support)
5. Front of the machine
6. Up

5. Assemble 2 bolts (1 x 2-1/2 inch), 2 washers (1 inch), and 2 locknuts (1 inch) through the vertical holes in the mounting frame and the bottom frame plate (Figure 9 and Figure 11).

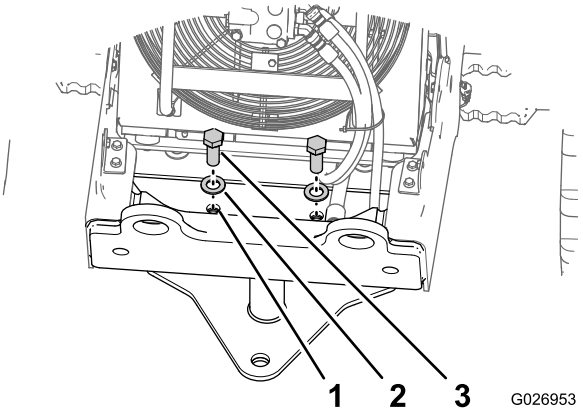

Figure 11

1. Hole (bottom frame plate)
2. Washer (1 inch)
3. Bolt (1 x 2-1/2 inch)

6. Torque the bolts and nuts to 977 to 1193 N-m (720 to 880 ft-lb).

Connecting the Hydraulic Hoses to the Bulkhead Panels

1. Remove the caps and the hoses that you identified and marked in step 1 of Disconnecting the Hydraulic Hoses from the Bulkhead Panels (page 6) .
2. Connect the hoses to the fittings in the left and right bulkhead panels (Figure 7).
3. Torque the swivel nuts of the hoses to 20.3 to 28.4 N-m (15–21 ft-lb).

3

Assembling the Pivot Cylinders to the Mounting Frame

Parts needed for this procedure:

2	Pins (1-1/4 x 7-5/8 inch)
4	Snap rings (1-1/8 inch)
4	Washers (1 x 5/16 inch)

Procedure

Pivot cylinder weight: 14 kg (30 lb)

Grease type: lithium-based grease

1. Install 2 snap rings (1-1/8 inch) onto the end of the 2 pins (1-1/4 x 7-5/8 inch) as shown in Figure 12.

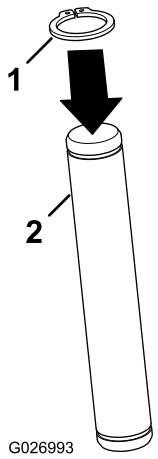

Figure 12

1. Snap ring (1-1/8 inch)
2. Pin (1-1/4 x 7-5/8 inch)

2. Align the mounting fitting at the fixed end of the pivot cylinder on top of the bushing in the bottom plate of the mounting frame (Figure 13).

   Note: Align the T-fitting that you installed in Preparing Pivot Cylinders (page 5) toward the centerline of the machine.

   Note: Ensure that the bottom of the mounting fitting of the pivot cylinder is flush to the bottom plate of the mounting frame.

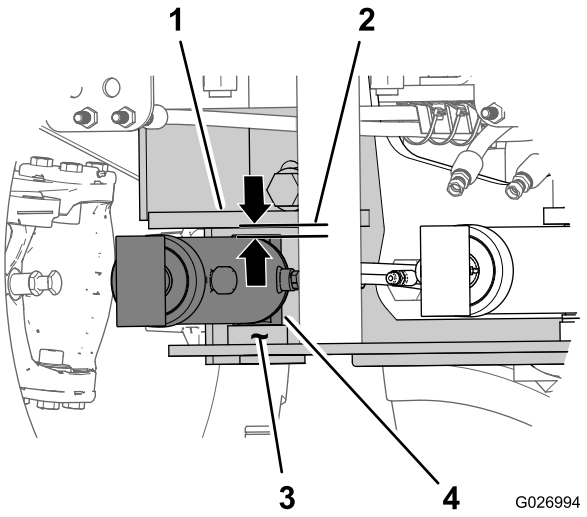

Figure 13

1. Cylinder lug (mounting frame)
2. Gap
3. Bushing (bottom plate of the mounting frame)
4. Pivot cylinder (fixed end)

3. Determine the number of washers (1 x 5/16 inch) needed to reduce the gap between the top of the cylinder mounting fitting and the cylinder lug of the mounting frame (Figure 13).

   Note: At each cylinder, use the (1 x 5/16 inch) washers to reduce the gap as required (0 to 2 washers).

4. Remove the cylinder and align the washer(s) that you determined in step 3 on top of the bushing in the support frame (Figure 14).

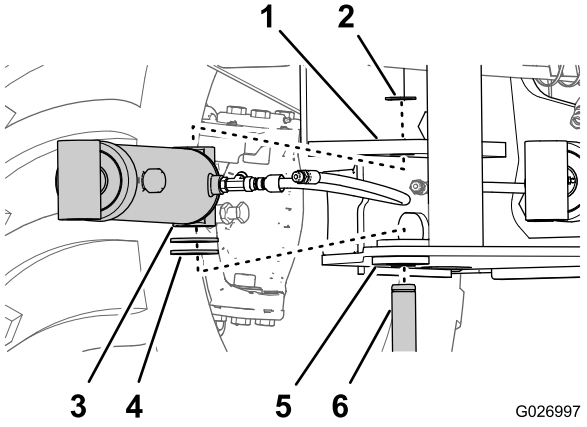

Figure 14

1. Cylinder lug (mounting frame)
2. Snap ring (1-1/8 inch)
3. Mount fitting (pivot cylinder)
4. Washers (1 x 5/16 inch—use as required)
5. Bushing (bottom plate of the mounting frame)
6. Pin (1-1/4 x 7-5/8 inch)

5. Apply a coat of the specified grease to the pin (1-1/4 x 7-5/8 inch), inside diameter of the hole in the cylinder lug, inside diameter of the mounting frame bushing, and inside diameter of both mount fittings of the pivot cylinder (Figure 15).

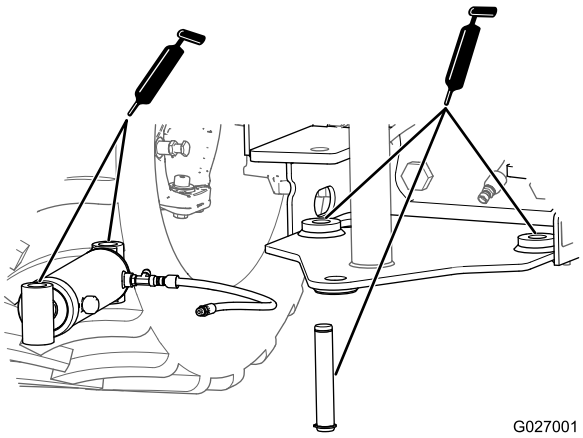

Figure 15

6. Align the mounting fitting at the fixed end of the pivot cylinder between the bushing/washers and the mounting lug (Figure 14).

   Note: Align the T-fitting toward the centerline of the machine.

7. Align the holes in the mounting lug, mounting fitting, washer(s), and the bushing (Figure 14).
8. Secure the cylinder to the support frame with a pin (1-1/4 x 7-5/8 inch) that you prepared in step 1 and install a nap ring (1-1/8 inch) into the other groove in the pin (Figure 14).
9. Repeat steps 2 through 8 for the other pivot cylinder.

4

Connecting the Pivot Cylinder Hoses

No Parts Required

Procedure

1. Remove the plug from the free end of the left and right pivot-cylinder hoses.
2. Connect the left pivot-cylinder hose to the T-fitting at the left pivot cylinder (Figure 16) and torque the swivel nut of the hose to 21 to 28 N-m (15 to 21 ft-lb).

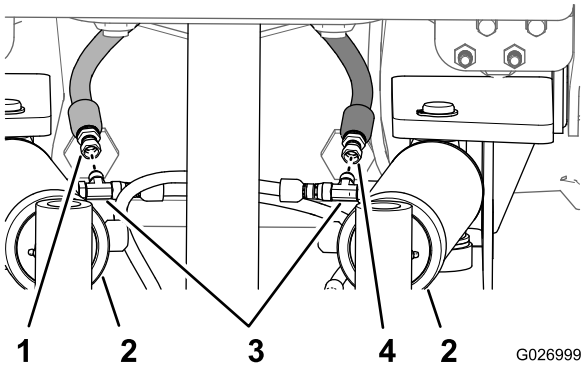

Figure 16

1. Pivot-cylinder hose (right)
2. Pivot cylinders
3. T-fitting (3/8 inch)
4. Pivot-cylinder hose (left)

3. Connect the right pivot-cylinder hose to the T-fitting at the right pivot cylinder (Figure 16) and torque the swivel nut of the hose to 21 to 28 N-m (15 to 21 ft-lb).
4. Rotate the T-fittings back and up approximately 60° (Figure 16) and torque the swivel nuts for the T-fittings to 32 to 39 N-m (23 to 29 ft-lb).
5. Remove the shipping plugs from the retract ports of the pivot cylinders.
6. Connect the free end of the cross-connect hose (1/4 x 20 inch) from the T-fitting in the left pivot cylinder to the retract port of the right pivot cylinder (Figure 17) and tighten the hose fitting at the port to 31 to 39 N-m (23 to 29 ft-lb).

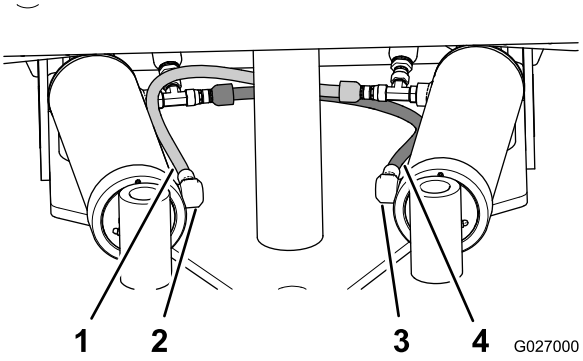

Figure 17

1. Cross-connect hose (T-fitting—left pivot cylinder)
2. Retract port (right pivot cylinder)
3. Retract port (left pivot cylinder)
4. Cross-connect hose (T-fitting—right pivot cylinder)

7. Connect the free end of the hose (1/4 x 20 inch) from the T-fitting in the right pivot cylinder to the retract port of the left pivot cylinder (Figure 17) and tighten the hose fitting at the port to 31 to 39 N-m (23 to 29 ft-lb).
8. Tighten the swivel nuts of both cross-connect hoses at the T-fittings to 21 to 28 N-m (15 to 21 ft-lb).
9. Route the coolant reservoir hose down and through the hole in the bottom plate of the mounting frame (Figure 18).

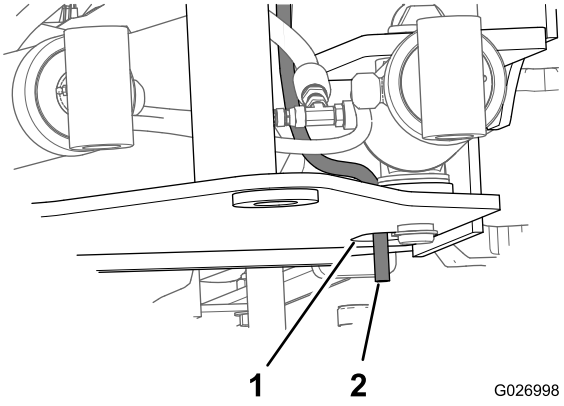

Figure 18

1. Hole (mounting frame)
2. Hose (coolant reservoir)

5

Installing the Pivot Frame

Parts needed for this procedure:

1	Pivot frame
3	Washers (1 x 5/8 inch)
1	Pivot pin (1-1/2 x 15-1/2 inch)
2	Snap ring (1-3/8 inch)
2	Pins (1-1/4 x 7-5/8 inch)
4	Snap rings (1-1/8 inch)

Installing the Pivot Frame to the Machine

Pivot frame weight: 65 kg (142 lb)

Grease type: lithium-based grease

1. Install 1 snap ring (1-3/8 inch) into the groove in the pivot pin (1-1/2 x 15-1/2 inch) as shown in Figure 19.

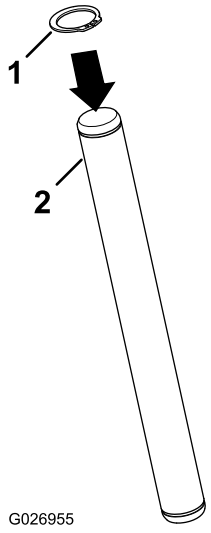

Figure 19

1. Snap ring (1-3/8 inch)
2. Pivot pin (1-1/2 x 15-1/2 inch)

2. Place the pivot frame onto lifting equipment with a 65 kg (142 lb) capacity.
3. Align the pivot frame between the upper and lower plates of the mounting frame (Figure 20).

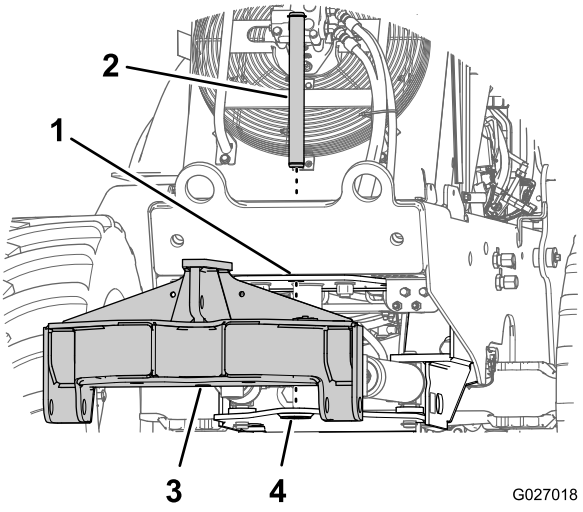

Figure 20

1. Upper plate (mounting frame)
2. Pivot pin (1-1/2 x 15-1/2 inch)
3. Pivot frame
4. Lower plates(mounting frame)

4. Align the pivot holes in the pivot frame and mounting frame and insert the pivot pin (1-1/2 x 15-1/2 inch) that you assembled in step 1; refer to Figure 20.

   Note: Ensure that the bottom of the pivot frame is flush to the lower plate of the mounting frame.

5. Determine the number of washers (1 x 5/8 inch) needed to reduce the gap between the upper plate of the mounting frame and the top of the pivot frame (Figure 21).

   Note: Use the (1 x 5/8 inch) washers to reduce the gap as required (0 to 3 washers).

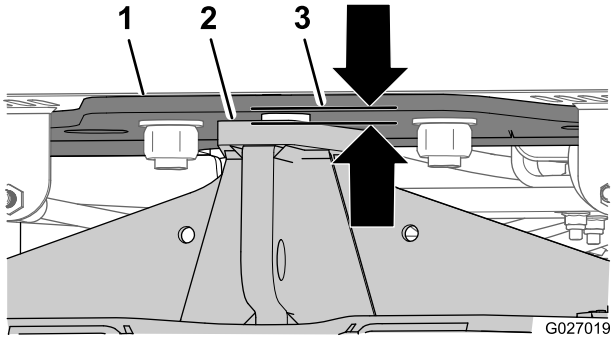

Figure 21

1. Upper plate (mounting frame)
2. Top of the pivot frame
3. Gap

6. Remove the pivot pin from the pivot frame and mounting frame.
7. Separate the pivot frame from the mounting frame.
8. Apply a coat of the specified grease to the pivot pin and the pivot holes in the pivot frame and mounting frame (Figure 22 and Figure 23).

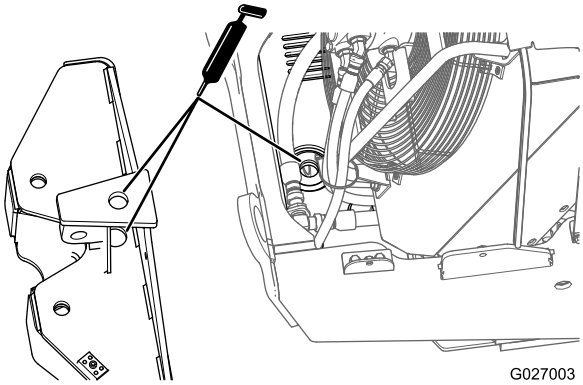

Figure 22

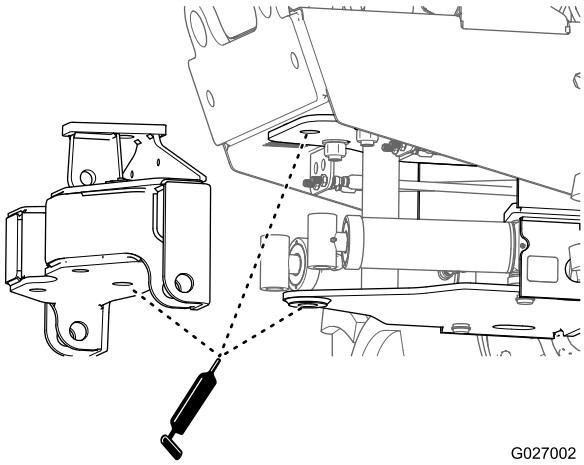

Figure 23

9. Align the pivot frame between the upper and lower plates of the mounting frame, and align the pivot holes in the pivot and mounting frames (Figure 24).

   Note: Ensure that the bottom of the pivot frame is flush to the lower plate of the mounting frame.

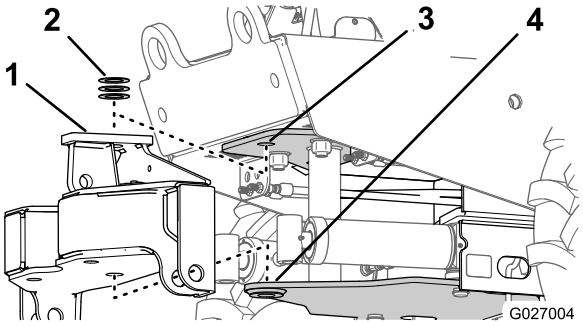

Figure 24

1. Pivot frame
2. Washers (1 x 5/8 inch—use as required)
3. Upperplate (mounting frame)
4. Lower plate (mounting frame)

10. Insert the washers that you determined in step 5 between the upper plate of the mounting frame and the top of the pivot frame (Figure 24).

11. Insert the pivot pin (1-1/2 x 15-1/2 inch) through the mounting frame, washers, and pivot frame bushings and secure the pin with a snap ring (1-3/8 inch) as shown inFigure 25 and Figure 26.

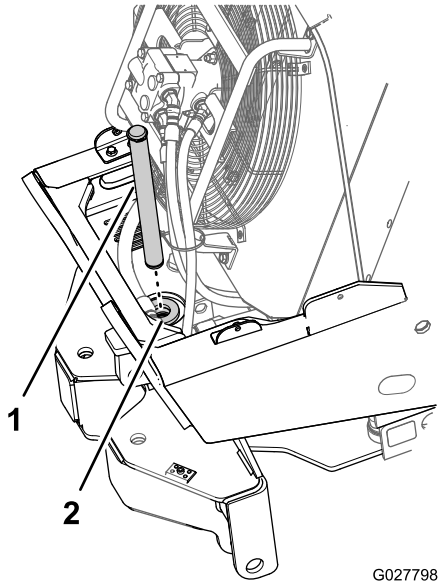

Figure 25

1. Pivot pin
2. Bushing-upper (mounting frame)

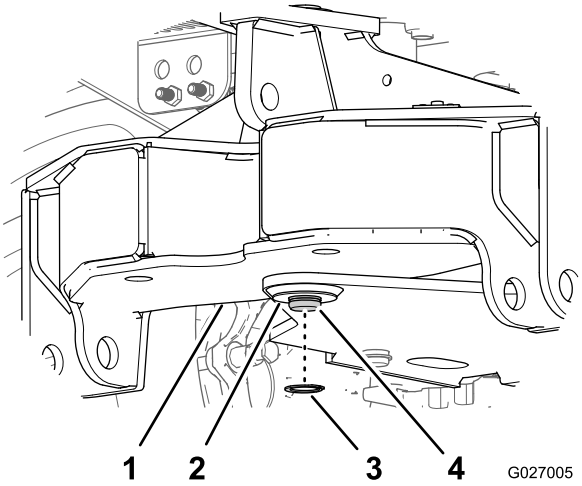

Figure 26

1. Pivot frame
2. Bushing-lower plate (mounting frame)
3. Snap ring (1-3/8 inch)
4. Pivot pin (1-1/2 x 15-1/2 inch)

Assembling the Pivot Cylinders to the Pivot Frame

Grease type: lithium-based grease

1. Install 2 snap rings (1-1/8 inch) onto the ends of the 2 pins (1-1/4 x 7-5/8 inch) as shown in Figure 27.

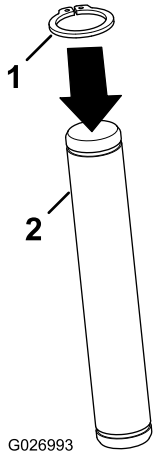

Figure 27

1. Snap ring (1-1/4 inch)
2. Pin (1-1/4 x 7-5/8 inch)

2. Apply a coat of the specified grease to the pins (1-1/4 x 7-5/8 inch) and the inside diameter of the holes in the upper and lower plates for the pivot frame (Figure 28).

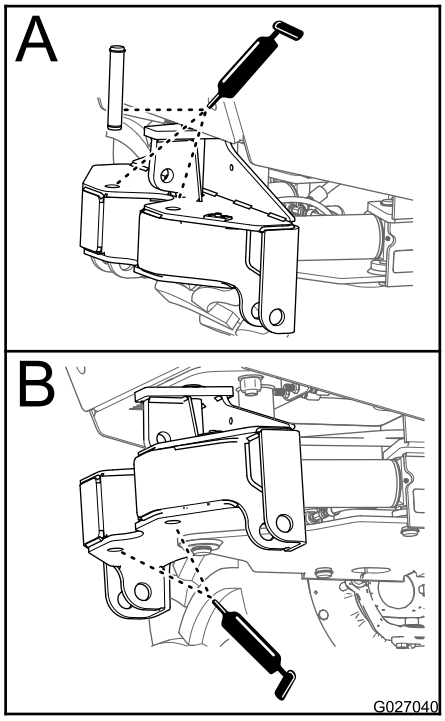

Figure 28

3. Align the mounting holes in the pivot frame with the holes in the rod fitting for the cylinder (Figure 28).
4. Insert a pin (1-1/4 x 7-5/8 inch) through the holes in the pivot frame and rod fittings and secure the pin with a snap ring (1-1/8 inch) as shown in Figure 29.

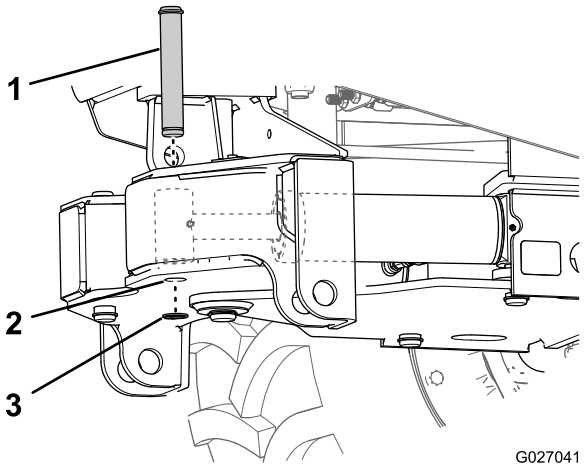

Figure 29

5. Repeat steps 3 and 4 for the other pivot frame mounting point and pivot cylinder.

6

Installing the Blade Arms

Parts needed for this procedure:

1	Lift-arm assembly
2	Pin (1-1/2 x 5-1/4 inch)
4	Snap ring (1-3/8 inch)
1	Lift cylinder—retracted length 51.4 cm (20.25 inch); rod diameter 38.1 mm (1.5 inch)
2	Clevis pin (1-1/4 x 4-7/16 inch)
2	Hairpin

Installing the Lift Arms

Lift arm weight: 84 kg (185 lb)

1. Install 2 snap rings (1-3/8 inch) onto the end of the 2 pins (1-1/2 x 5-1/4 inch) as shown in figure Figure 30.

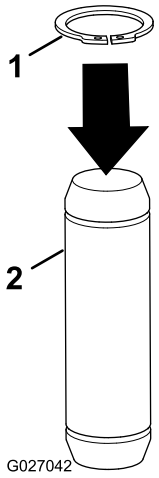

Figure 30

1. Snap rings (1-3/8 inch)
2. Pins (1-1/2 x 5-1/4 inch)

2. Support the lift-arm assembly with lifting equipment with a 84 kg (185 lb) capacity.
3. Align the fittings at the end of the lift arms with the lift flanges of the pivot frame (Figure 31).

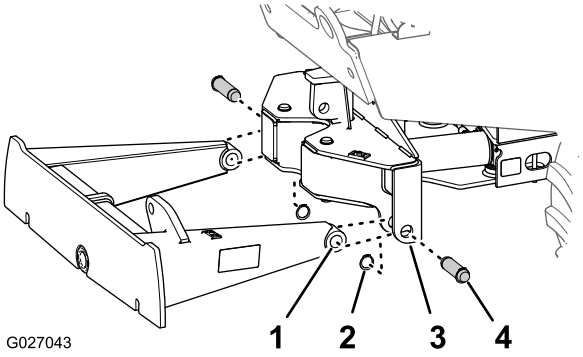

Figure 31

1. Fitting (lift-arm assembly)
2. Snap rings (1-3/8 inch)
3. Lift flange (pivot frame)
4. Pins (1-1/2 x 5-1/4 inch)

4. Align the holes in the fittings with the holes in the flanges (Figure 31).
5. Insert a pin (1-1/2 x 5-1/4 inch) through the holes in the fitting and flanges at 1 side of the machine (Figure 31).
6. Secure the pin with a snap ring (1-3/8 inch) as shown in Figure 31.
7. Repeat steps 5 and 6 for the fitting and flanges on the other side of the machine.
8. Align the lift arms level and support them with jack stands with a 263 kg (580 lb) capacity.

Installing the Lift Cylinder

Lift cylinder weight 12 kg (25 lb)

Note: The retracted length of the lift cylinder is 51.4 cm (20.25 inch) and the rod diameter is 38.1 mm(1.5 inch).

1. Align the holes in the rod fitting of the lift cylinder with the hole in the mounting lug for the lift-arm assembly as shown in A of Figure 32.

   Note: Ensure that the hydraulic ports of the cylinder are up.

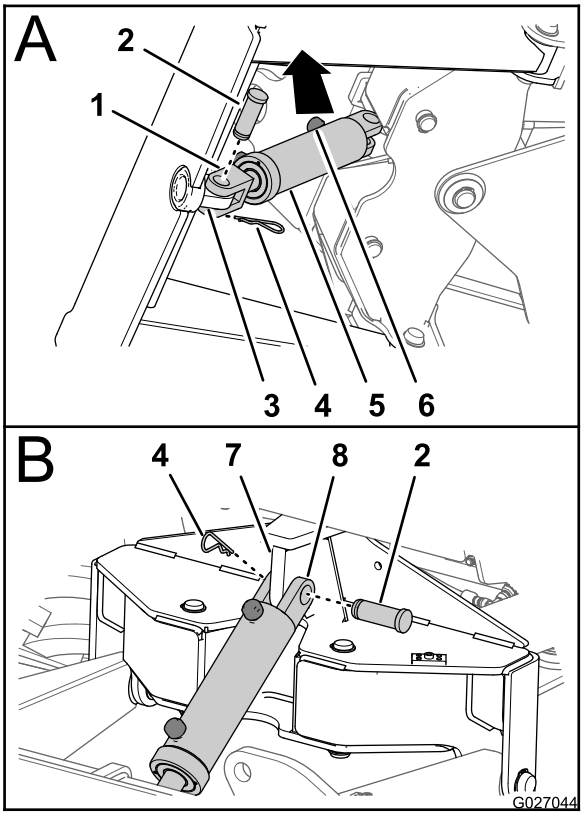

Figure 32

1. Rod fitting (lift cylinder)
2. Clevis pin (1-1/4 x 4-7/16 inch)
3. Mounting lug (lift-arm assembly)
4. Hairpin
5. Lift cylinder—retracted length 51.4 cm (20.25 inch); rod diameter 38.1 mm(1.5 inch)
6. Hydraulic port
7. Cylinder lug (pivot frame)
8. Mounting fitting (lift cylinder—fixed end)

2. Secure the rod fitting to the lug with a clevis pin (1-1/4 x 4-7/16 inch) and a hairpin (Figure 32).
3. Align the holes in the mounting fitting at the fixed end of the lift cylinder with the cylinder lug of the pivot frame as shown in B of Figure 32.

   Note: Manually extend or collapse the lift cylinder as needed to align the holes.

4. Secure the cylinder to the lug with a clevis pin (1-1/4 x 4-7/16 inch) and a hairpin (Figure 32).

7

Installing the Backfill Blade

Parts needed for this procedure:

1	Backfill blade
2	Retainer plate
6	Bolt (5/8 x 1-1/2 inch)
12	Washer (5/8 inch)
8	Retained shim
1	Tilt cylinder—retracted length 51.4 cm (20.25 inch); rod diameter 44.5 mm (1.75 inch)
2	Clevis pin (1-1/4 x 4-7/16 inch)
2	Hairpin

Installing the Backfill Blade onto the Lift Arms

Backfill blade weight: 1302 kg (291 lb)

1. Use lifting equipment to lift the backfill blade and align it to the mounting plate of the lift-arm assembly (Figure 33).

   Note: Align the pivot fitting of the backfill blade into the pivot bushing of the mounting plate of the lift-arm assembly.

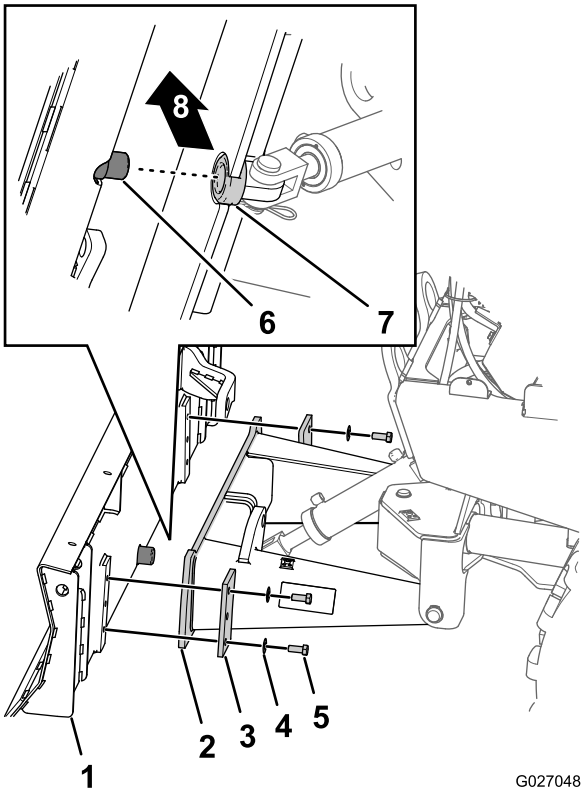

Figure 33

1. Backfill blade
2. Mounting plate (lift-arm assembly)
3. Retainer plate
4. Washer (5/8 inch)
5. Bolt (5/8 x 1-1/2 inch)
6. Pivot fitting
7. Pivot bushing (mounting plate)
8. Up

2. Use jack stands to support the lifting arms.

⚠ DANGER

A jack can suddenly fail resulting in injury or death.

- **Never rely on a hydraulic jack to support weight of components.**
- **Do not place your body under any elevated component(s).**

3. Assemble the backfill blade to the mounting plate with 2 retainer plates and 4 bolts (5/8 x 1-1/2 inch), and 4 washers (5/8 inch) and tighten the bolts until they are hand tight (Figure 34).

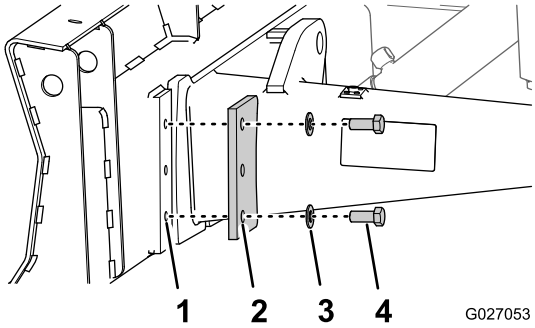

Figure 34

1. Threaded hole (backfill blade)
2. Retainer plate
3. Washer (5/8 inch)
4. Bolt (5/8 x 1-1/2 inch)

4. Check that the backfill blade has a slip fit moving the backfill blade by hand (Figure 35).

   Note: Take some of the lifting pressure off the lifting equipment to allow moving the backfill blade.

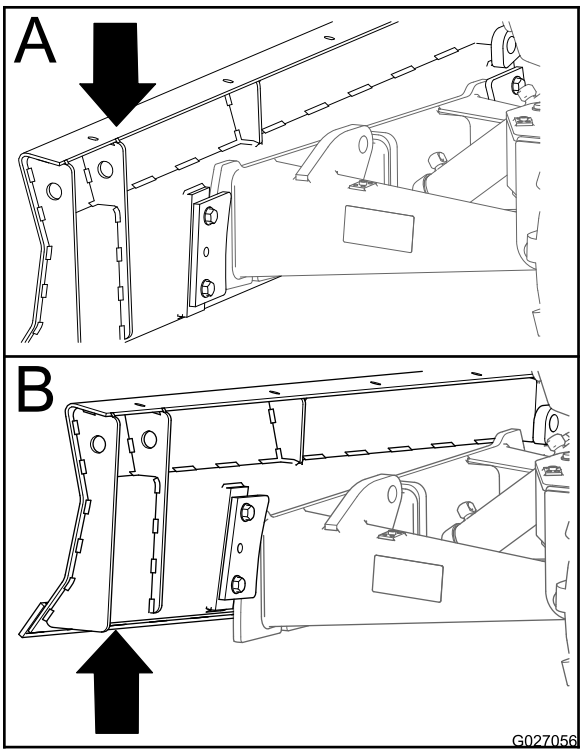

Figure 35

5. If the backfill blade does not have a slip fit to the mounting plate, perform the following at each side of the backfill blade:

   A. Remove the bolts and washers (Figure 36).

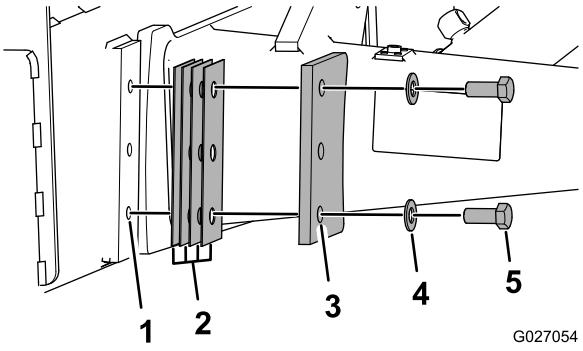

Figure 36

1. Threaded plate (backfill blade)
2. Retainer shim (use as required)
3. Retainer plate
4. Washer (5/8 inch)
5. Bolt (5/8 x 1-1/2 inch)

   B. Add a retainer shim between the threaded plate of the backfill blade and the retainer plate (Figure 36).

      Note: At each retainer plate, use the retainer shims to reduce the gap as required (0 to 4 shims).

   C. Assemble the retainer plate, bolts, and washers until they are hand tight (Figure 36).

   D. Check that the backfill blade has a slip fit moving the backfill blade by hand. If the backfill blade does not have a slip fit, repeat step A though D.

6. Remove the bolts (5/8 x 1-1/2 inch).
7. Apply medium-grade thread-locking compound to the threads of the 6 bolts (5/8 x 1-1/2 inch).
8. Assemble the backfill blade to the mounting plate at each side of the machine with the 2 retainer plates, 6 bolts (5/8 x 1-1/2 inch), 6 washers (5/8 inch), and the shims (Figure 36 and Figure 37) that you determined in step 5.

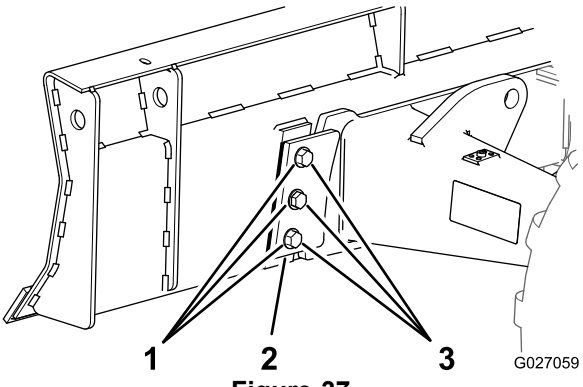

Figure 37

1. Washers (5/8 inch)
2. Retainer plate
3. Bolts (5/8 x 1-1/2 inch)

9. Torque the bolts to 136 to 163 N-m (100 to 120 ft-lb).

Installing the Tilt Cylinder

Tilt cylinder weight: 11.3 kg (25 lb)

Note: The retracted length of the tilt cylinder is 51.4 cm (20.25 inch) and the rod diameter is 44.5 mm (1.75 inch).

1. Align the hole in the mounting fitting at the fixed end of the lift cylinder—retracted length 51.4 cm (20.25 inch); rod diameter 44.5 mm 1.75 inch) with the hole mounting lug at the lift-arm assembly as shown in A of Figure 38.

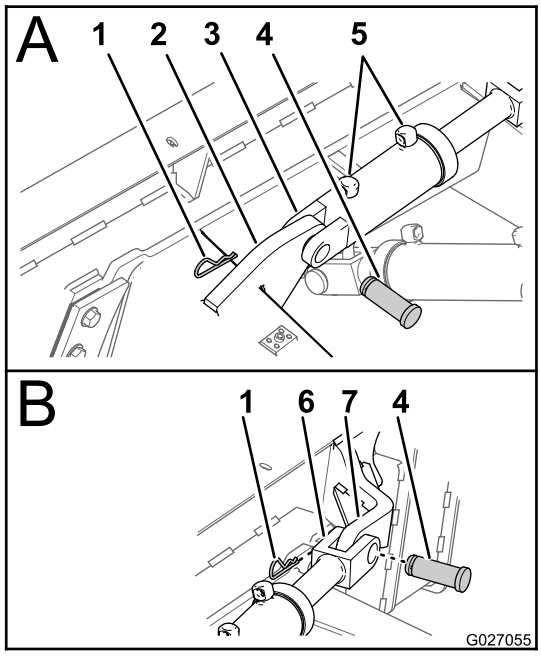

Figure 38

1. Hairpin
2. Mounting lug (lift-arm assembly)
3. Mounting fitting (lift cylinder—fixed end)
4. Clevis pin (1-1/4 x 4-7/16 inch)
5. Hydraulic ports
6. Rod fitting (tilt cylinder)
7. Mounting lug (backfill blade)

2. Secure the mounting fitting of the lift cylinder to the mounting lug with a clevis pin (1-1/4 x 4-7/16 inch) and hairpin (Figure 38).
3. Align the holes in the rod fitting of the tilt cylinder with the cylinder lug of the backfill blade as shown in B of Figure 38.

   Note: Manually extend or collapse the lift cylinder as needed to align the holes.
4. Secure the rod fitting to the cylinder lug with a clevis pin (1-1/4 x 4-7/16 inch) and a hairpin (Figure 38).
5. Lift the backfill blade slightly with the lifting equipment, remove the jack stands, lower the backfill blade, and remove the lifting equipment.

8

Installing the Hydraulic Hoses

Parts needed for this procedure:

1	Lift cylinder extend hose (3/8 x 23 inches)
1	Lift cylinder retract hose (3/8 x 31-1/4 inch)
1	Tilt cylinder extend hose (3/8 x 49-1/4 inch)
1	Tilt cylinder retract hose (3/8 x 62-1/4 inch)
4	Clamp block (2-hose)
2	Bolt (3/8 x 1-3/4 inch)
2	Washer (3/8 inch)
2	Cover plate
1	Cable tie

Installing the Lift Cylinder Hoses

1. Remove the caps from the inboard and outboard bulkhead fittings of the right-hydraulic panel (Figure 39).

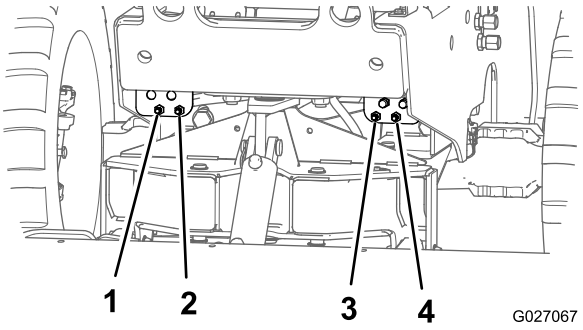

Figure 39

1. Retract circuit—lift cylinder (right-hydraulic panel)
2. Extend circuit—lift cylinder (right-hydraulic panel)
3. Extend circuit—tilt cylinder (left-hydraulic panel—lower row)
4. Retract circuit—tilt cylinder (left-hydraulic panel—lower row)

2. Remove the shipping caps from the extend and retract ports of the lift cylinder.
3. Connect the lift cylinder extend hose (3/8 x 23 inches) between the bulkhead fitting for the lift cylinder extend circuit at the right-hydraulic panel and the extend port of the lift cylinder (Figure 40).

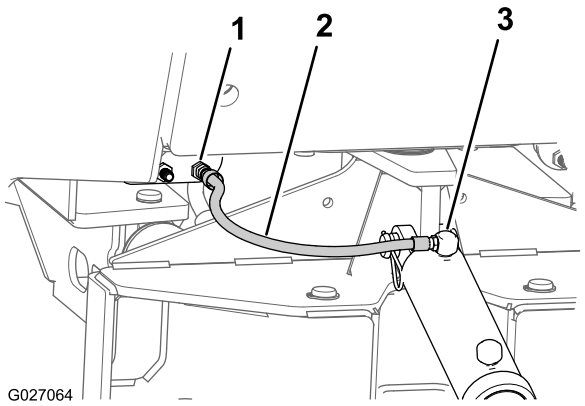

Figure 40

1. Bulkhead fitting—lift cylinder extend circuit (right-hydraulic panel)
2. Lift cylinder extend hose (3/8 x 23 inches)
3. Extend port (lift cylinder)

4. Connect the lift cylinder retract hose (3/8 x 31-1/4 inch) between the bulkhead fitting for the lift cylinder retract circuit at the right-hydraulic panel. and the retract port of the lift cylinder (Figure 41).

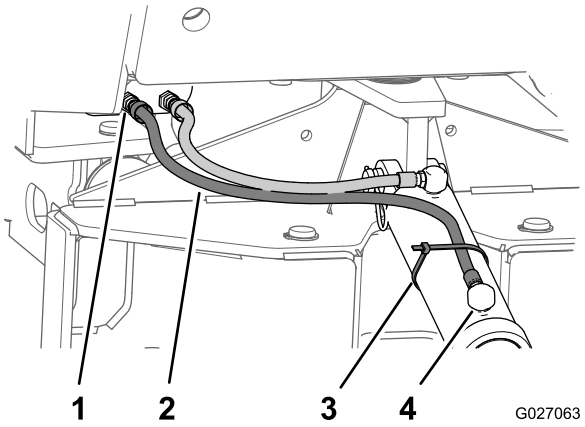

Figure 41

1. Bulkhead fitting—lift cylinder retract circuit (right-hydraulic panel)
2. Lift cylinder retract hose (3/8 x 31-1/4 inch)
3. Cable tie
4. Retract port (lift cylinder)

5. At the lift cylinder ports, torque the hose fittings to 31 to 39 N-m (23 to 29 ft-lb).
6. At the hydraulic panel, torque the swivel nuts for the hoses to 21 to 28 N-m (15 to 21 ft-lb).
7. Secure the retract hose to the lift cylinder with a cable tie (Figure 41).

Installing the Tilt Cylinder Hoses

1. Remove the caps from the tilt cylinder extend and retract ports of the left-hydraulic panel (Figure 39).
2. Remove the shipping caps from the extend and retract ports of the tilt cylinder.
3. Connect the tilt cylinder extend hose (3/8 x 49-1/4 inch) between the bulkhead fitting for the tilt cylinder extend circuit at the left-hydraulic panel. and the extend port of the tilt cylinder (Figure 42).

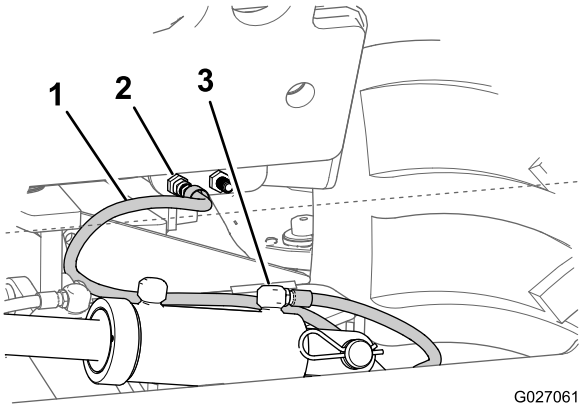

Figure 42

1. Bulkhead fitting—tilt cylinder extend circuit (left-hydraulic panel—lower row)
2. Tilt cylinder extend hose (3/8 x 49-1/4 inch)
3. Extend port (tilt cylinder)

4. Connect the tilt cylinder retract hose (3/8 x 62-1/4 inch) between the bulkhead fitting for the tilt cylinder retract circuit at the left-hydraulic panel. and the retract port of the tilt cylinder (Figure 43)

Note: Ensure that the tilt cylinder retract hose is routed outboard of the tilt cylinder extend hose.

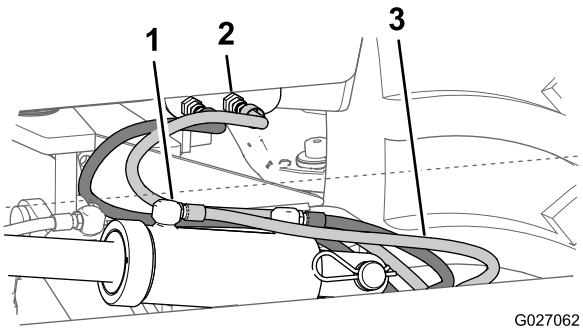

Figure 43

1. Retract port (tilt cylinder)
2. Bulkhead fitting—tilt cylinder retract circuit (left-hydraulic panel—lower row)
3. Tilt cylinder retract hose (3/8 x 62-1/4 inch)

5. At the tilt cylinder ports, torque the hose fittings to 31 to 39 N-m (23 to 29 ft-lb).
6. At the hydraulic panel, torque the swivel nuts for the hoses to 21 to 28 N-m (15 to 21 ft-lb).
7. Apply medium-grade thread-locking compound to the threads of the 2 bolts (3/8 x 1-3/4 inch).
8. At the weld nut on the left lift arm, secure the hoses with 2 clamp blocks, bolt (3/8 x 1-3/4 inch), washer (3/8 inch), and cover plate (Figure 44).

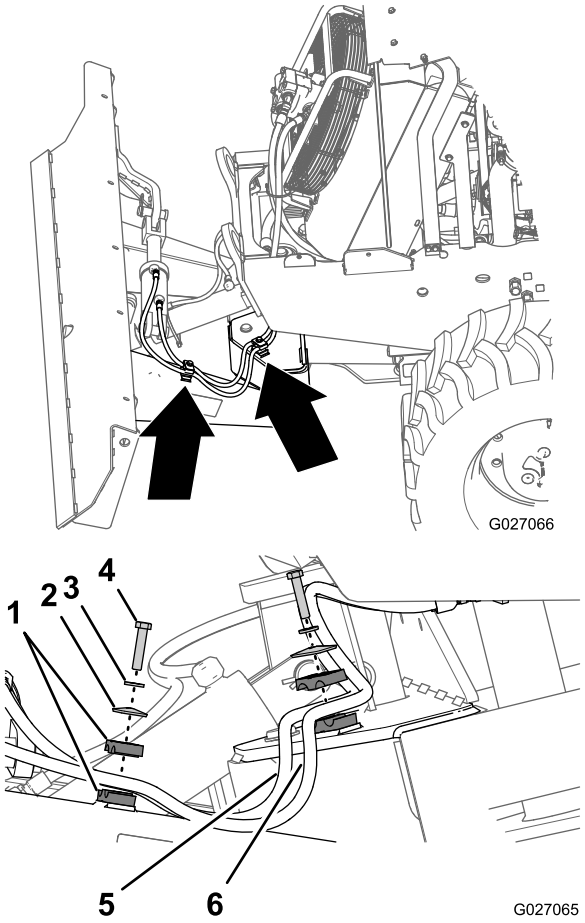

Figure 44

1. Clamp blocks (2-hose)
2. Cover plate
3. Washer (3/8 inch)
4. Bolt (3/8 x 1-3/4 inch)
5. Tilt cylinder extend hose
6. Tilt cylinder retract hose

9. At the weld nut on the top plate of the pivot frame, secure the hoses with 2 clamp blocks, bolt (3/8 x 1-3/4 inch), washer (3/8 inch), and cover plate (Figure 44)

   Note: Ensure that there is slack in the hoses between the clamp blocks at the lift arm and the pivot frame (Figure 44).
10. Torque the bolts to 37 to 45 N-m (27 to 33 ft-lb).

9

Bleeding the Hydraulic System for the Backfill Blade

No Parts Required

Preparing the Machine

Use **Toro Premium All-season Hydraulic Fluid** (available in 5-gallon pails or 55-gallon drums. See the *Parts Catalog* or an Authorized Toro Service Dealer for part numbers).

If Toro hydraulic fluid is not available, you may use an equivalent hydraulic fluid, provided that it meets all the following material properties and industry specifications. **Do not use a synthetic hydraulic fluid.** Consult with your lubricant distributor to identify a satisfactory product.

High Viscosity Index/Low Pour Point Anti-wear Hydraulic Fluid, ISO VG 46

Material Properties:	
Viscosity, ASTM D445	St @ 40°C (104°F): 44 to 48
	St @ 100°C (212°F): 7.9 to 8.5
Viscosity Index ASTM D2270	140 to 160
Pour Point, ASTM D97	-37°C (-34°F) to -45°C (-49°F)
FZG, Fail stage	11 or better
Water content (new fluid)	500 ppm (maximum)
Industry Specifications:	Vickers I-286-S (Quality Level), Vickers M-2950-S (Quality Level), Denison HF-0

1. Check the hydraulic-fluid level in the sight glass located at the side of the hydraulic reservoir (Figure 45).

   Note: The hydraulic-fluid level should be between the bottom and midpoint of the sight glass.

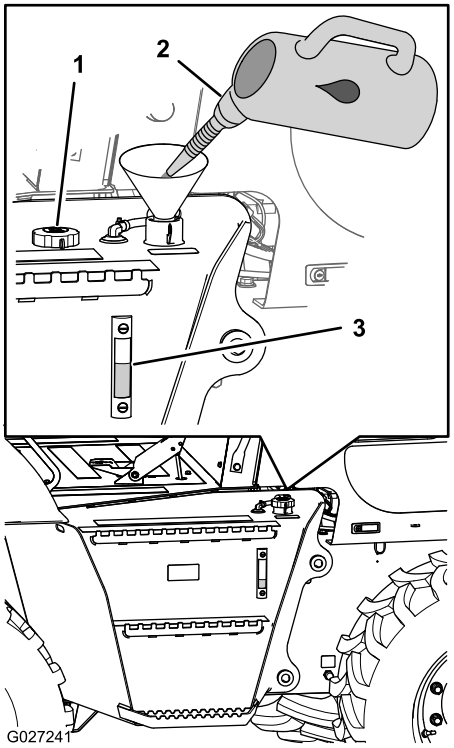

Figure 45

1. Fill cap (off)
2. Hydraulic fluid
3. Hydraulic fluid level at the midpoint of the sight glass

2. If the hydraulic-fluid level is not visible in the sight glass, remove the fill cap (Figure 45), add the specified hydraulic fluid until the fluid level is at the midpoint of the sight glass, and install the fill cap.
3. Ensure that the parking brake is set.
4. Start the machine; refer to the *Operator's Manual*.

Bleeding the Backfill Blade Hydraulic System

1. Switch the machine to the backfill blade function by pressing button 5 on the command center until the icon for the backfill blade appears (Figure 46).

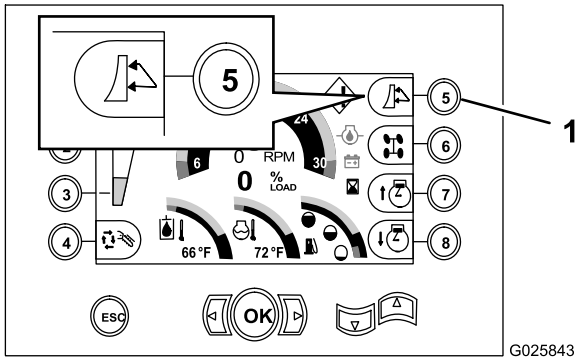

Figure 46

1. Button 5—backfill blade/vibratory plow selection (backfill-blade icon shown)

2. Slowly raise and lower the backfill blade by moving the right joystick rearward and forward (Figure 47 and Figure 48).

Note: Move the blade up and down until the blade raises and lowers smoothly

Important: Do not press the trigger to float the blade.

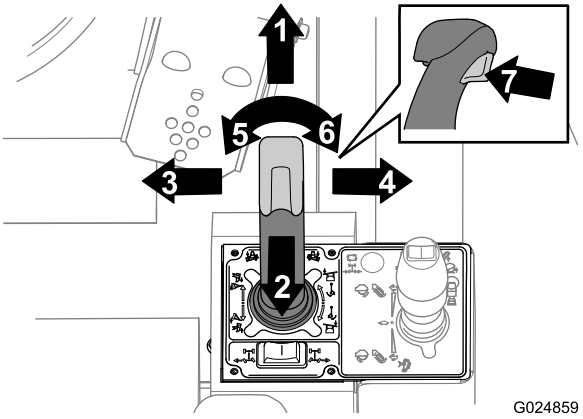

Figure 47

1. Lower the blade (joystick)
2. Raise the blade (joystick)
3. Tilt the blade left (joystick)
4. Tilt the blade right (joystick)
5. Turn the blade left (left-thumb control)
6. Turn the blade right (right-thumb control)
7. Float the blade (trigger)

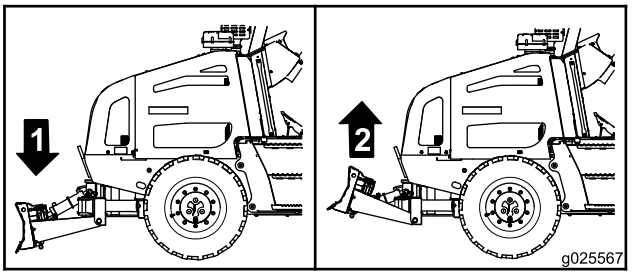

Figure 48

1. Lower the backfill blade
2. Raise the backfill blade

3. Move the blade up so that the lift arms are parallel to the ground.
4. Pivot the blade fully right by pressing the right-thumb control (Figure 47 and Figure 49).

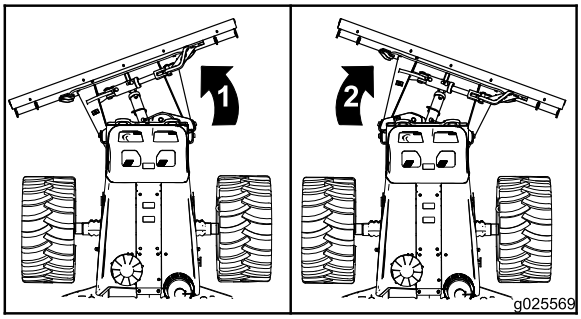

Figure 49

1. Pivot—left
2. Pivot—right

5. If the backfill blade pivots to the left, leave the backfill blade turned left and perform the following:

   Note: If the backfill blade swings right, skip to step 6.

   A. Lower the backfill blade to the ground by moving the right joystick forward (Figure 47).

   B. Shut off the engine.

   C. Place a rag over the pivot-cylinder hoses and loosen the swivel nuts (Figure 50).

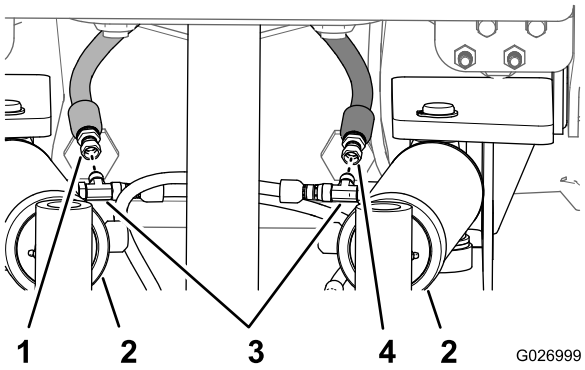

Figure 50

1. Pivot-cylinder hose (move to the T-fitting for the right pivot cylinder)
2. Pivot cylinders
3. T-fitting (3/8 inch)
4. Pivot-cylinder hose (move to the T-fitting for the right pivot cylinder)

   D. Switch the position of the 2 hoses to the T-fitting of the opposite pivot cylinders (Figure 50).

   E. Torque the swivel nuts for the 2 pivot cylinder hoses to 21 to 28 N-m (15 to 21 ft-lb).

   F. Start the machine and fully raise the backfill blade.

   Important: Do not press the trigger to float the blade.

   G. Slowly turn the backfill blade left and right by pressing the left and right-thumb controls (Figure 47).

   Note: Move the backfill blade left and right until the blade pivots smoothly.

6. Slowly tilt the backfill blade down at the left side and then down at the right side by twisting the right joystick clockwise and counterclockwise (Figure 47 and Figure 51).

   Note: Tilt the blade left side down and right side down until the blade tilts smoothly.

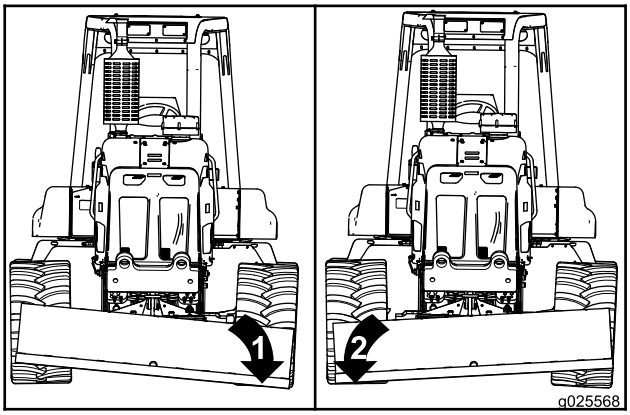

Figure 51

1. Down—left
2. Down—right

7. Center the backfill blade, lower it to the ground, and shut off the machine.
8. Check the hydraulic fittings, hoses, and cylinders for leaks.

   Note: Repair all hydraulic leaks before you operate the machine.

9. Check the hydraulic-fluid level; refer to steps 1 and 2 in Preparing the Machine (page 19).

10

Installing the Nose Panel

No Parts Required

Procedure

1. Apply medium-duty, thread locking compound to the threads of the 4 flanged-head bolts (10 x 30 mm) that you removed in step 2 of Removing the Nose Panel (page 4).
2. Align the 4 holes in the nose pane with the 4 weld nuts in the frame of the machine (Figure 5).
3. Install the nose panel to the machine with the 4 flanged-head bolts (Figure 5).
4. Torque the bolts to 47 to 57 N-m (34 to 42 ft-lb).
5. Install the side panels (Figure 4); refer to the *Operator's Manual*.

Notes:

Notes:



Count on it.