Form No. 3391-376 Rev A

TORO®

Count on it.

Operator's Manual

Dethatching Unit

Greensmaster® 3000 Series Traction Unit

Model No. 04479—Serial No. 315000001 and Up

Register at www.Toro.com.
Original Instructions (EN)

CE

3391-376 A

⚠ WARNING

CALIFORNIA
Proposition 65 Warning

This product contains a chemical or chemicals known to the State of California to cause cancer, birth defects, or reproductive harm.

Introduction

This product complies with all relevant European directives. For details, please see the Declaration of Incorporation (DOI) at the back of this publication.

This dethatching unit is mounted to a ride-on machine and is intended to be used by professional, hired operators in commercial applications. It is designed primarily for dethatching grass on well-maintained lawns in parks, golf courses, sports fields, and on commercial grounds.

Read this information carefully to learn how to operate and maintain your product properly and to avoid injury and product damage. You are responsible for operating the product properly and safely.

You may contact Toro directly at www.Toro.com for product and accessory information, help finding a dealer, or to register your product.

Whenever you need service, genuine Toro parts, or additional information, contact an Authorized Service Dealer or Toro Customer Service and have the model and serial numbers of your product ready. Figure 1 identifies the location of the model and serial numbers on the product. Write the numbers in the space provided.

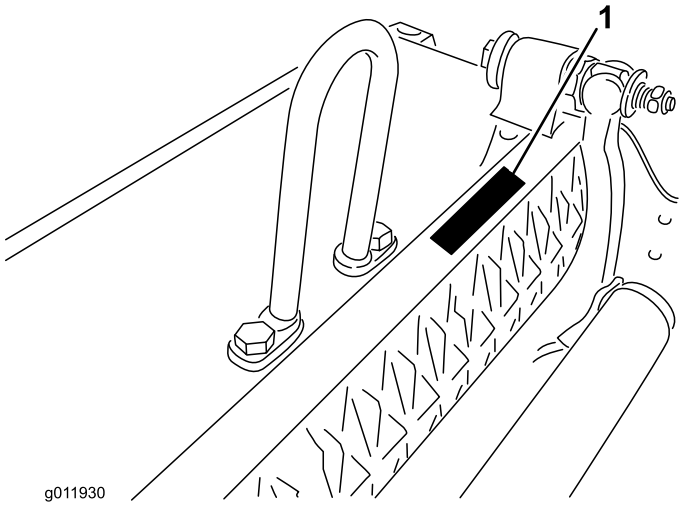

Figure 1

1. Location of the model and serial numbers

Model No. _____

Serial No. _____

This manual identifies potential hazards and has safety messages identified by the safety alert symbol (Figure 2), which signals a hazard that may cause serious injury or death if you do not follow the recommended precautions.



Figure 2

1. Safety alert symbol

This manual uses 2 words to highlight information. **Important** calls attention to special mechanical information and **Note** emphasizes general information worthy of special attention.

© 2014—The Toro® Company
8111 Lyndale Avenue South
Bloomington, MN 55420

Contact us at www.Toro.com.
Printed in the USA
All Rights Reserved

Contents

Safety 3
Safety and Instructional Decals 4
Setup 5
1 Installing the Front Roller 5
2 Repositioning the Counter Weights 5
3 Installing the Hoop Link, Offset Link, or Chain Link 5
4 Adjusting the Reel Blades for Positive Setting (Above Ground) 6
5 Adjusting the Reel Blades For Negative Setting (Below Ground) 7
6 Installing the Dethatching Unit 7
Product Overview 9
Specifications 9
Attachments/Accessories 9
Operation 9
Training Period 9
Operating Tips 9
Maintenance 10
Disassembling the Reel 10

Safety

Hazard control and accident prevention depend upon the awareness, concern, and proper training of the personnel involved in the operation, transport, maintenance, and storage of the machine. Improper use or maintenance of the machine can result in injury or death. To reduce the potential for injury or death, comply with the following safety instructions.

- Read, understand, and follow all the instructions in the traction unit and dethatching unit operator's manuals before operating the dethatching unit.
- Never allow children to operate the traction unit or dethatching units. Do not allow adults to operate traction unit or dethatching units without proper instruction. Only trained operators who have read this manual should operate the traction unit or dethatching units.
- Never operate the dethatching units when under the influence of drugs or alcohol.
- Keep all shields and safety devices in place. If a shield, safety device or decal is illegible or damaged, repair or replace it before operating the machine. Also, tighten any loose nuts, bolts, and screws to ensure that the dethatching unit is in safe operating condition.
- Always wear substantial, slip-resistant shoes. Do not operate the dethatching units while wearing sandals, tennis shoes, sneakers, or shorts. Also, do not wear loose-fitting clothing which could get caught in moving parts. Always wear long pants and substantial shoes. Wearing safety glasses, safety shoes, and a helmet is advisable and required by some local ordinances and insurance regulations.
- Remove all debris or other objects that may be picked up and thrown by the dethatching unit. Keep all bystanders away from the working area.
- If the dethatching unit strikes a solid object or the unit vibrates abnormally, stop and shut the engine off. Check the dethatching unit for damaged parts. Repair any damage before starting and operating the dethatching unit.
- Lower the dethatching units to the ground, and remove the key from the ignition switch whenever the machine is left unattended.
- Ensure that the dethatching units are in safe operating condition by keeping nuts, bolts, and screws tight.
- Remove the key from the ignition switch to prevent someone from accidentally starting the engine when servicing, adjusting, or storing the machine.
- Perform only those maintenance instructions described in this manual. If major repairs are ever needed or assistance is desired, contact an Authorized Toro Distributor.
- To ensure optimum performance and safety, always purchase genuine Toro replacement parts and accessories. **Never use "will-fit" replacement parts and accessories made by other manufacturers.** Look for

the Toro logo to assure genuineness. Using unapproved replacement parts and accessories could void the warranty of The Toro Company.

Safety and Instructional Decals

Safety decals and instructions are easily visible to the operator and are located near any area of potential danger. Replace any decal that is damaged or lost.

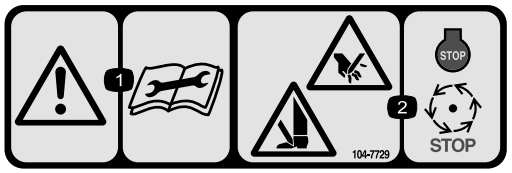

104-7729

1. Warning—read the instructions before servicing or performing maintenance.
2. Cutting/dismemberment hazard; hand or foot—stop the engine and wait for moving parts to stop.

Setup

1

Installing the Front Roller

No Parts Required

Procedure

The dethatching unit is shipped without a front roller. Install the roller using the loose parts supplied with the dethatching unit and installation instructions included with the roller.

2

Repositioning the Counter Weights

No Parts Required

Procedure

The dethatching units are shipped with the counter weight mounted to the right end and the motor mount to the left end of the dethatching unit. To move the counterweight to the other side of the dethatching unit, do the following steps:

1. Remove the 2 capscrews that secure the counter weight to the right end of the dethatching unit.
2. Remove the counter weight (Figure 3).

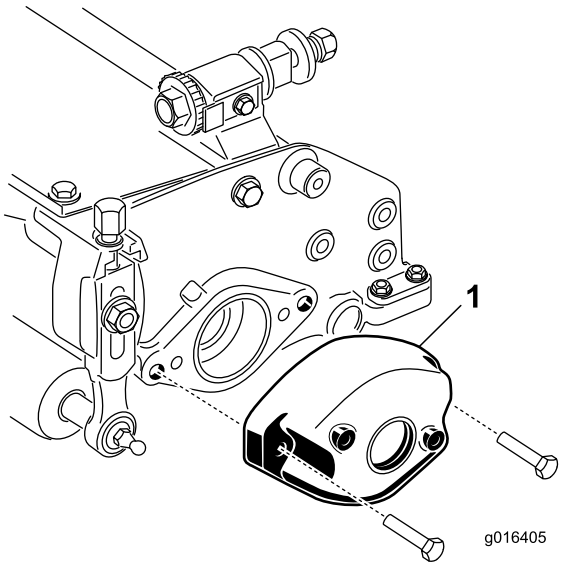

Figure 3

1. Counter weight

3. Remove the 2 Allen-head screws that secure the motor mount to the left end of the dethatching unit.
4. Remove the motor mount (Figure 4).
5. Apply grease to the inside diameter of the drive spline (Figure 4).

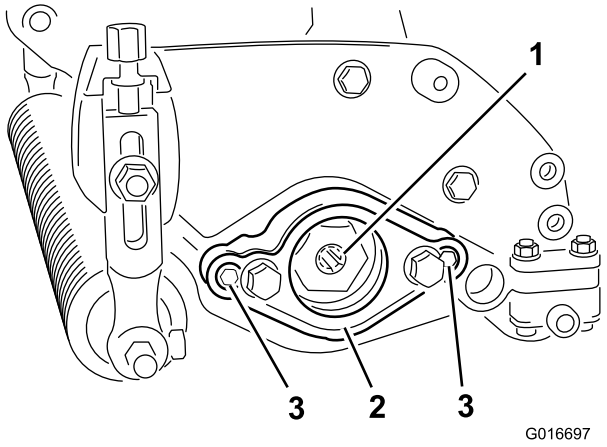

Figure 4

1. Drive spline
2. Motor mount
3. Allen-head screw

6. On the right end of the dethatching unit, apply a light coating of oil to the O-ring and install the motor mount with the 2 Allen-head screws previously removed.

   Note: Torque the screws to 16 to 20 N-m (12 to 15 ft-lb).
7. On the left end of the dethatching unit, apply a light coating of oil to the O-ring and install the counter weight with the screws previously removed.

   Note: Torque the screws to 16 to 20 N-m (12 to 15 ft-lb).

3

Installing the Hoop Link, Offset Link, or Chain Link

No Parts Required

Procedure

For dethatching units that will be mounted on a traction unit with a serial number prior to 240000001, the proper lift link must be obtained and installed.

Note: The 2 capscrews used to mount the lift link come installed on the dethatching unit.

A hoop link (part no. 105-5740) is required for the Greensmaster 3000, 3000-D, 3050, 3100, 3150, and 3150-Q traction units (it is supplied with the above Greensmaster traction units).

Install the hoop link to the top of the dethatching unit with 2 capscrews.

Note: Torque the capscrews to 34 to 40 N-m (25 to 30 ft-lb) (Figure 5).

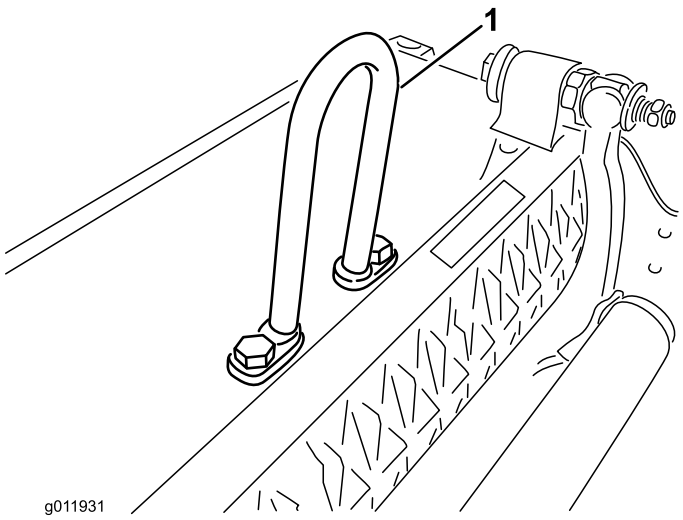

Figure 5

1. Hoop link

An offset link (part no. 110-2397) is required for the Greensmaster 3250-D traction units (it is supplied with the Greensmaster 3250-D traction unit).

Install the offset link (Figure 6) to the top of the dethatching unit with 2 capscrews.

Note: Torque the capscrews to 34 to 40 N-m (25 to 30 ft-lb).

Important: Position the lift hook offset toward the front of the dethatching unit.

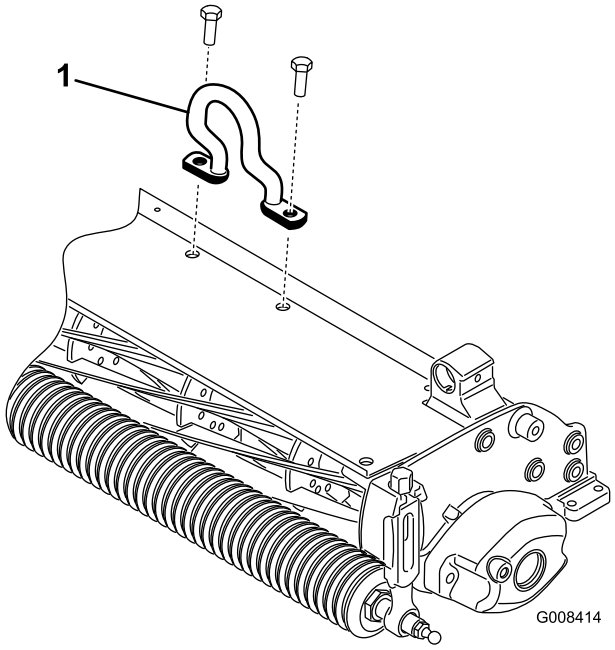

Figure 6

1. Offset lift hook

A chain link (part no. 106-2601) and a mounting bracket (part no. 105-5738) may also be used on the Greensmaster 3250-D traction unit.

Install the chain link to the top of the dethatching unit with the mounting bracket and 2 capscrews.

Note: Torque the capscrews to 34 to 40 N-m (25 to 30 ft-lb) (Figure 7).

Note: When mounting the dethatching unit to the traction unit, hook the wider end of the chain link to the lift arm.

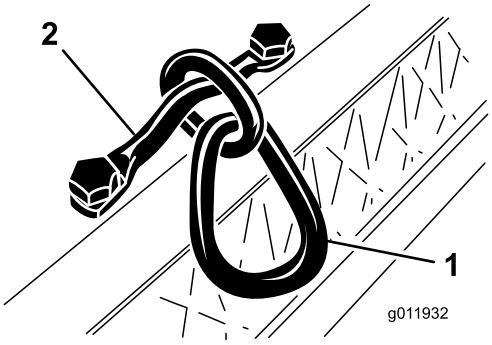

Figure 7

1. Chain link
2. Mounting bracket

4

Adjusting the Reel Blades for Positive Setting (Above Ground)

No Parts Required

Procedure

1. Place the dethatching unit on a level surface.
2. Place a gauge bar, which has the desired height of blade above ground, under each end of the dethatching unit (Figure 8).

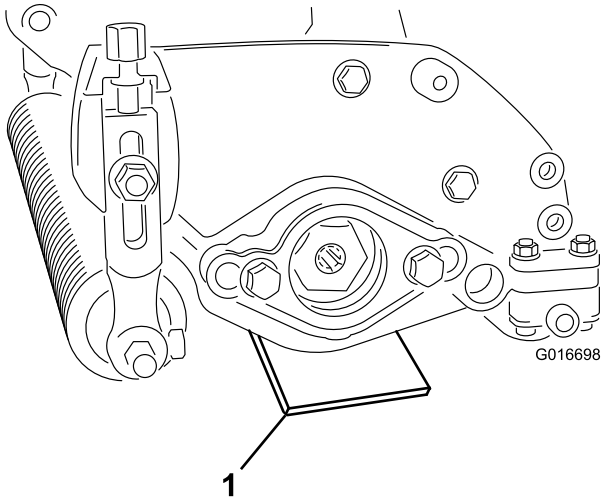

Figure 8

1. Gauge bar

3. With the rear roller contacting the level surface, loosen both height-of-cut nuts.
4. Rotate the height-of-cut until both ends of the front roller contact the level surface.
5. Verify contact by using a piece of paper to check each roller end.
6. Tighten both height-of-cut knob locknuts.

5

Adjusting the Reel Blades For Negative Setting (Below Ground)

No Parts Required

Procedure

Note: Maximum recommended negative setting is 5 mm (3/16 inch) deep blade penetration.

1. Place the dethatching unit on a level surface.
2. Place 4 gauge bars, set to the desired depth of blade penetration below ground, under the front roller and rear roller of the dethatching unit (Figure 9).

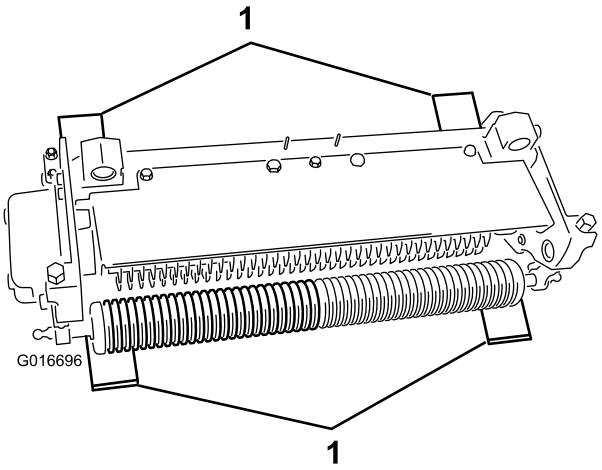

Figure 9

1. Gauge bar

3. With the rear roller contacting the level surface, loosen both height-of-cut nuts.
4. Rotate the height-of-cut until both ends of the front roller contact the level surface.
5. Verify contact by using a piece of paper to check each roller end.
6. Tighten both height-of-cut knob locknuts.

6

Installing the Dethatching Unit

No Parts Required

Important: If you set the dethatching reel at a negative setting, take care to prevent damaging the reel blades, due to contact with concrete floors or paved surfaces.

Note: The dethatching unit comes configured for left-hand drive from the factory. It may need to be configured for a right-hand drive. Refer to 2 Repositioning the Counter Weights (page 5).

Product Overview

Specifications

Tractors	These dethatching units will mount on the Greensmaster 3000, 3000-D, 3050, 3100, 3150, 3250-D and 3150-Q Traction Units.
Height-of-cut	Dethatching depth is adjusted on the front roller by two vertical screws and held by two locking capscrews
Height-of-cut Range	Bench HOC range is 4.78 mm (0.188 inch) below ground level to 6.35 mm (0.250 inch) above ground level.
Reel Bearings	Two sealed stainless steel deep groove ball bearings, 30 mm inside diameter slip fit onto reel shaft retained by internally splined threaded drive insert. Additional inboard seal / slinger along with sealed external bearing housing for added protection. Reel position maintained by a wave washer with no adjusting nut.
Rollers	The rear roller is a 5.1 cm (2 inch) diameter steel full roller.
Grass Shield	Non-adjustable shield with adjustable cutoff bar to improve grass discharge from reel in wet conditions.
Counterweight	A cast iron weight mounted opposite to the drive motor balances the dethatching unit.
Net Weight	31 kg (68 lb)

Attachments/Accessories

A selection of Toro approved attachments and accessories is available for use with the machine to enhance and expand its capabilities. Contact your Authorized Service Dealer or Distributor or go to www.Toro.com for a list of all approved attachments and accessories.

Operation

Training Period

Before operating the dethatching unit on a green, evaluate the performance of the dethatching unit at the desired setting. Operate in a clear, unused area to determine if the desired results will be achieved. Adjust the dethatching unit when changing settings as desired.

Note: When the dethatching units are mounted on Greensmaster 3200, 3200–D or 3250–D traction units and are operated under heavy loads, you may need to adjust the carrier frame and unit circuit relief valve.

Operating Tips

- Operate the traction unit at full throttle, varying the ground speed to meet dethatching loads.
- The maximum recommended negative setting on the dethatching blades is 5 mm (3/16 inch) deep penetration.
- The power requirements to operate the dethatching unit will vary with turf and soil conditions.
- The travel speed may need to be reduced in some conditions.

Maintenance

Note: Determine the left and right sides of the machine from the normal operating position.

Disassembling the Reel

Disassemble the reel whenever you need to change a blade or replace the reel bearings.

Important: Ensure that the 2 shaft retainers and spacer are in place before installing the bearing on the reel (Figure 10). Torque the insert nuts to 136 N-m (100 lb-ft).

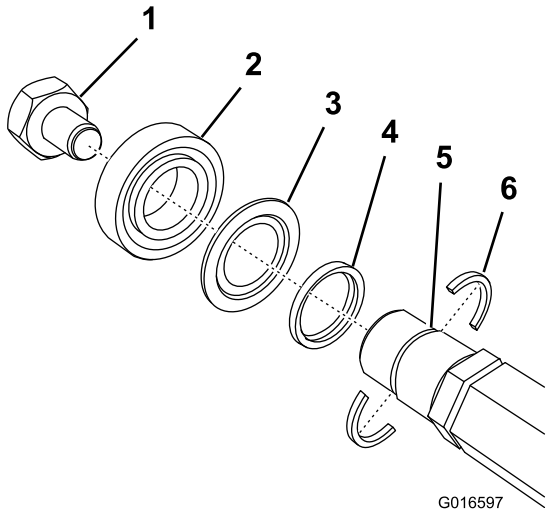

Figure 10

1. Left-hand threaded insert nut
2. Bearing
3. Seal
4. Spacer
5. Slot in shaft
6. Shaft retainer (Install these first)

Notes:

Notes:

Notes:

Declaration of Incorporation

The Toro Company, 8111 Lyndale Ave. South, Bloomington, MN, USA declares that the following unit(s) conform(s) to the directives listed, when installed in accordance with the accompanying instructions onto certain Toro models as indicated on the relevant Declarations of Conformity.

Model No.	Serial No.	Product Description	Invoice Description	General Description	Directive
04479	315000001 and Up	Dethatching Unit, Greensmaster 3000 Series Traction Unit	THATCHING REEL	Thatching Reel	2006/42/EC

Relevant technical documentation has been compiled as required per Part B of Annex VII of 2006/42/EC.

We will undertake to transmit, in response to requests by national authorities, relevant information on this partly completed machinery. The method of transmission shall be electronic transmittal.

This machinery shall not be put into service until incorporated into approved Toro models as indicated on the associated Declaration of Conformity and in accordance with all instructions, whereby it can be declared in conformity with all relevant Directives.

Certified:



David Klis
Sr. Engineering Manager
8111 Lyndale Ave. South
Bloomington, MN 55420, USA
December 18, 2013

EU Technical Contact:

Peter Tetteroo
Toro Europe NV
B-2260 Oevel-Westerloo
Belgium

Tel. 0032 14 562960
Fax 0032 14 581911

International Distributor List

Distributor:	Country:	Phone Number:	Distributor:	Country:	Phone Number:
Agrolanc Kft	Hungary	36 27 539 640	Maquiver S.A.	Colombia	57 1 236 4079
Balama Prima Engineering Equip.	Hong Kong	852 2155 2163	Maruyama Mfg. Co. Inc.	Japan	81 3 3252 2285
B-Ray Corporation	Korea	82 32 551 2076	Mountfield a.s.	Czech Republic	420 255 704 220
Casco Sales Company	Puerto Rico	787 788 8383	Mountfield a.s.	Slovakia	420 255 704 220
Ceres S.A.	Costa Rica	506 239 1138	Munditol S.A.	Argentina	54 11 4 821 9999
CSSC Turf Equipment (pvt) Ltd.	Sri Lanka	94 11 2746100	Norma Garden	Russia	7 495 411 61 20
Cyril Johnston & Co.	Northern Ireland	44 2890 813 121	Oslinger Turf Equipment SA	Ecuador	593 4 239 6970
Cyril Johnston & Co.	Republic of Ireland	44 2890 813 121	Oy Hako Ground and Garden Ab	Finland	358 987 00733
Equiver	Mexico	52 55 539 95444	Parkland Products Ltd.	New Zealand	64 3 34 93760
Femco S.A.	Guatemala	502 442 3277	Perfetto	Poland	48 61 8 208 416
ForGarder OU	Estonia	372 384 6060	Pratoverde SRL.	Italy	39 049 9128 128
G.Y.K. Company Ltd.	Japan	81 726 325 861	Prochaska & Cie	Austria	43 1 278 5100
Geomechaniki of Athens	Greece	30 10 935 0054	RT Cohen 2004 Ltd.	Israel	972 986 17979
Golf international Turizm	Turkey	90 216 336 5993	Riversa	Spain	34 9 52 83 7500
Guandong Golden Star	China	86 20 876 51338	Lely Turfcare	Denmark	45 66 109 200
Hako Ground and Garden	Sweden	46 35 10 0000	Solvert S.A.S.	France	33 1 30 81 77 00
Hako Ground and Garden	Norway	47 22 90 7760	Spypros Stavrinides Limited	Cyprus	357 22 434131
Hayter Limited (U.K.)	United Kingdom	44 1279 723 444	Surge Systems India Limited	India	91 1 292299901
Hydroturf Int. Co Dubai	United Arab Emirates	97 14 347 9479	T-Markt Logistics Ltd.	Hungary	36 26 525 500
Hydroturf Egypt LLC	Egypt	202 519 4308	Toro Australia	Australia	61 3 9580 7355
Irrimac	Portugal	351 21 238 8260	Toro Europe NV	Belgium	32 14 562 960
Irrigation Products Int'l Pvt Ltd.	India	0091 44 2449 4387	Valtech	Morocco	212 5 3766 3636
Jean Heybroek b.v.	Netherlands	31 30 639 4611	Victus Emak	Poland	48 61 823 8369

European Privacy Notice

The Information Toro Collects
Toro Warranty Company (Toro) respects your privacy. In order to process your warranty claim and contact you in the event of a product recall, we ask you to share certain personal information with us, either directly or through your local Toro company or dealer.

The Toro warranty system is hosted on servers located within the United States where privacy law may not provide the same protection as applies in your country.

BY SHARING YOUR PERSONAL INFORMATION WITH US, YOU ARE CONSENTING TO THE PROCESSING OF YOUR PERSONAL INFORMATION AS DESCRIBED IN THIS PRIVACY NOTICE.

The Way Toro Uses Information
Toro may use your personal information to process warranty claims, to contact you in the event of a product recall and for any other purpose which we tell you about. Toro may share your information with Toro's affiliates, dealers or other business partners in connection with any of these activities. We will not sell your personal information to any other company. We reserve the right to disclose personal information in order to comply with applicable laws and with requests by the appropriate authorities, to operate our systems properly or for our own protection or that of other users.

Retention of your Personal Information
We will keep your personal information as long as we need it for the purposes for which it was originally collected or for other legitimate purposes (such as regulatory compliance), or as required by applicable law.

Toro's Commitment to Security of Your Personal Information
We take reasonable precautions in order to protect the security of your personal information. We also take steps to maintain the accuracy and current status of personal information.

Access and Correction of your Personal Information
If you would like to review or correct your personal information, please contact us by email at legal@toro.com.

Australian Consumer Law

Australian customers will find details relating to the Australian Consumer Law either inside the box or at your local Toro Dealer.

Toro General Commercial Product Warranty

A Two-Year Limited Warranty

Conditions and Products Covered

The Toro Company and its affiliate, Toro Warranty Company, pursuant to an agreement between them, jointly warrant your Toro Commercial product ("Product") to be free from defects in materials or workmanship for two years or 1500 operational hours*, whichever occurs first. This warranty is applicable to all products with the exception of Aerators (refer to separate warranty statements for these products). Where a warrantable condition exists, we will repair the Product at no cost to you including diagnostics, labor, parts, and transportation. This warranty begins on the date the Product is delivered to the original retail purchaser.
* Product equipped with an hour meter.

Instructions for Obtaining Warranty Service

You are responsible for notifying the Commercial Products Distributor or Authorized Commercial Products Dealer from whom you purchased the Product as soon as you believe a warrantable condition exists. If you need help locating a Commercial Products Distributor or Authorized Dealer, or if you have questions regarding your warranty rights or responsibilities, you may contact us at:

Toro Commercial Products Service Department
Toro Warranty Company
8111 Lyndale Avenue South
Bloomington, MN 55420-1196

952–888–8801 or 800–952–2740
E-mail: commercial.warranty@toro.com

Owner Responsibilities

As the Product owner, you are responsible for required maintenance and adjustments stated in your *Operator's Manual*. Failure to perform required maintenance and adjustments can be grounds for disallowing a warranty claim.

Items and Conditions Not Covered

Not all product failures or malfunctions that occur during the warranty period are defects in materials or workmanship. This warranty does not cover the following:

- Product failures which result from the use of non-Toro replacement parts, or from installation and use of add-on, or modified non-Toro branded accessories and products. A separate warranty may be provided by the manufacturer of these items.
- Product failures which result from failure to perform recommended maintenance and/or adjustments. Failure to properly maintain your Toro product per the Recommended Maintenance listed in the *Operator's Manual* can result in claims for warranty being denied.
- Product failures which result from operating the Product in an abusive, negligent, or reckless manner.
- Parts subject to consumption through use unless found to be defective. Examples of parts which are consumed, or used up, during normal Product operation include, but are not limited to, brake pads and linings, clutch linings, blades, reels, rollers and bearings (sealed or greasable), bed knives, spark plugs, castor wheels and bearings, tires, filters, belts, and certain sprayer components such as diaphragms, nozzles, and check valves, etc.
- Failures caused by outside influence. Conditions considered to be outside influence include, but are not limited to, weather, storage practices, contamination, use of unapproved fuels, coolants, lubricants, additives, fertilizers, water, or chemicals, etc.
- Failure or performance issues due to the use of fuels (e.g. gasoline, diesel, or biodiesel) that do not conform to their respective industry standards.
- Normal noise, vibration, wear and tear, and deterioration.
- Normal "wear and tear" includes, but is not limited to, damage to seats due to wear or abrasion, worn painted surfaces, scratched decals or windows, etc.

Parts

Parts scheduled for replacement as required maintenance are warranted for the period of time up to the scheduled replacement time for that part. Parts replaced under this warranty are covered for the duration of the original product warranty and become the property of Toro. Toro will make the final decision whether to repair any existing part or assembly or replace it. Toro may use remanufactured parts for warranty repairs.

Deep Cycle and Lithium-Ion Battery Warranty:

Deep cycle and Lithium-Ion batteries have a specified total number of kilowatt-hours they can deliver during their lifetime. Operating, recharging, and maintenance techniques can extend or reduce total battery life. As the batteries in this product are consumed, the amount of useful work between charging intervals will slowly decrease until the battery is completely worn out. Replacement of worn out batteries, due to normal consumption, is the responsibility of the product owner. Battery replacement may be required during the normal product warranty period at owner's expense. Note: (Lithium-Ion battery only): A Lithium-Ion battery has a part only prorated warranty beginning year 3 through year 5 based on the time in service and kilowatt hours used. Refer to the *Operator's Manual* for additional information.

Maintenance is at Owner's Expense

Engine tune-up, lubrication, cleaning and polishing, replacement of filters, coolant, and completing recommended maintenance are some of the normal services Toro products require that are at the owner's expense.

General Conditions

Repair by an Authorized Toro Distributor or Dealer is your sole remedy under this warranty.

Neither The Toro Company nor Toro Warranty Company is liable for indirect, incidental or consequential damages in connection with the use of the Toro Products covered by this warranty, including any cost or expense of providing substitute equipment or service during reasonable periods of malfunction or non-use pending completion of repairs under this warranty. Except for the Emissions warranty referenced below, if applicable, there is no other express warranty. All implied warranties of merchantability and fitness for use are limited to the duration of this express warranty.

Some states do not allow exclusions of incidental or consequential damages, or limitations on how long an implied warranty lasts, so the above exclusions and limitations may not apply to you. This warranty gives you specific legal rights, and you may also have other rights which vary from state to state.

Note regarding engine warranty:

The Emissions Control System on your Product may be covered by a separate warranty meeting requirements established by the U.S. Environmental Protection Agency (EPA) and/or the California Air Resources Board (CARB). The hour limitations set forth above do not apply to the Emissions Control System Warranty. Refer to the Engine Emission Control Warranty Statement supplied with your product or contained in the engine manufacturer's documentation for details

Countries Other than the United States or Canada

Customers who have purchased Toro products exported from the United States or Canada should contact their Toro Distributor (Dealer) to obtain guarantee policies for your country, province, or state. If for any reason you are dissatisfied with your Distributor's service or have difficulty obtaining guarantee information, contact the Toro importer.

374-0253 Rev C