Form No. 3391-407 Rev A

Count on it.

Parts Catalog

TITAN® ZX4800

Zero-Turn-Radius Riding Mower

Model No. 74861—Serial No. 315000001 and Up

Register at www.Toro.com.
Original Instructions (EN)

3391-407 A

Ordering Replacement Parts

To order replacement parts, please supply the part number, the quantity, and the description of each part desired.

Understanding Reference Numbers

Each identified part in an illustration has a reference number. The reference number for a part also appears in the parts list, along with other information about the part.

This catalog uses two special reference number formats, one to indicate parts in a service assembly and another to indicate the quantity of a given part in an illustration.

Service Assembly Reference Numbers

Parts in service assemblies have reference numbers in the form a:b. The a represents the reference number of the entire service assembly and the b represents a sequential number unique to each part within the service assembly.

For example, a wheel assembly might be identified by reference number 6, the tire by 6:1, the valve by 6:2, and the wheel by 6:3. When you order the assembly identified by reference number 6, you receive all parts identified by reference numbers 6:1,6:2, and 6:3. However, you may also order any part individually. Reference numbers of this type appear in illustration and in parts lists.

Reference Numbers Indicating Quantity

In an illustration, if a reference number indicates more than one part, the reference number has the form nX y. The n represents the quantity of the part, the X is the multiplication symbol, and the y represents the reference number.

For example, in an illustration, the reference number 2X 37 means that two of the parts identified by reference number 37 are indicated.

List of Abbreviations

AR: as required

ASM: assembly

BBC: blade brake control

BHTF: button head thread forming

CARR: carriage

CCW: counter clockwise

CW: clockwise

DEG: degrees

DPA: Dual Point Adjustment

ECM: electronic control module

EXT: external

FH: flat head

GA: gauge

HD: heavy-duty

HF: hex flange

HH: hex head

HHF: hex head flange

HHFTF: hex head flange thread forming

HJ: hex jam

HLH: hex lag head

HOC: height-of-cut

HP: high pressure

HSBH: hex socket button head

HSFH: hex socket flat head

HSH: hex socket head

HWH: hex washer head

HWHTF: hex washer head thread forming

HYD: hydraulic

LH: left hand

LP: low pressure

LPG: Liquefied Petroleum Gas

NI: nylon insert

NPTF: national pipe thread fine

PFH: phillips flat head

PPH: phillips pan head

PPHTF: phillips pan head thread forming

PRH: phillips round head

PTH: phillips truss head

PTO: power-take-off

RH: right hand

ROPS: roll-over protection system

RRB: rear roller brush

SFH: slotted fillister head

SHH: slotted hex head

SHWH: slotted hex washer head

SPH: slotted pan head

SQH: square head

SRH: slotted round head

STD: standard

TAP: self tapping

TTH: torx truss head

Contents

Frame, Front Axle and Caster Wheel Assembly 4
Control Panel and Body Styling Pod Assembly 6
Deck Lift Assembly 8
Seat Assembly 10
Seat Assembly No. 131-4147 12
Traction Drive Assembly 14
LH Hydro Transmission Assembly No. 127-3381 16
RH Hydro Transmission Assembly No. 127-3382 18
Motion Control Assembly 20
Brake Link Assembly 22
Engine, Muffler and Clutch Assembly 24
Fuel Delivery Assembly 26
Multi Layer Fuel Tank Assembly No. 117-7352 28
Roll-Over Protection System Assembly 30
Electrical Assembly 32
48 Inch Deck Assembly 34
48 Inch Deck and Decal Assembly No. 131-4142 36
48 Inch Deck, Belt and Mulch Blade Assembly 38
Attachments and Accessories 40

© 2015—The Toro® Company
8111 Lyndale Avenue South
Bloomington, MN 55420

Contact us at www.Toro.com.
Printed in the USA.
All Rights Reserved

Frame, Front Axle and Caster Wheel Assembly

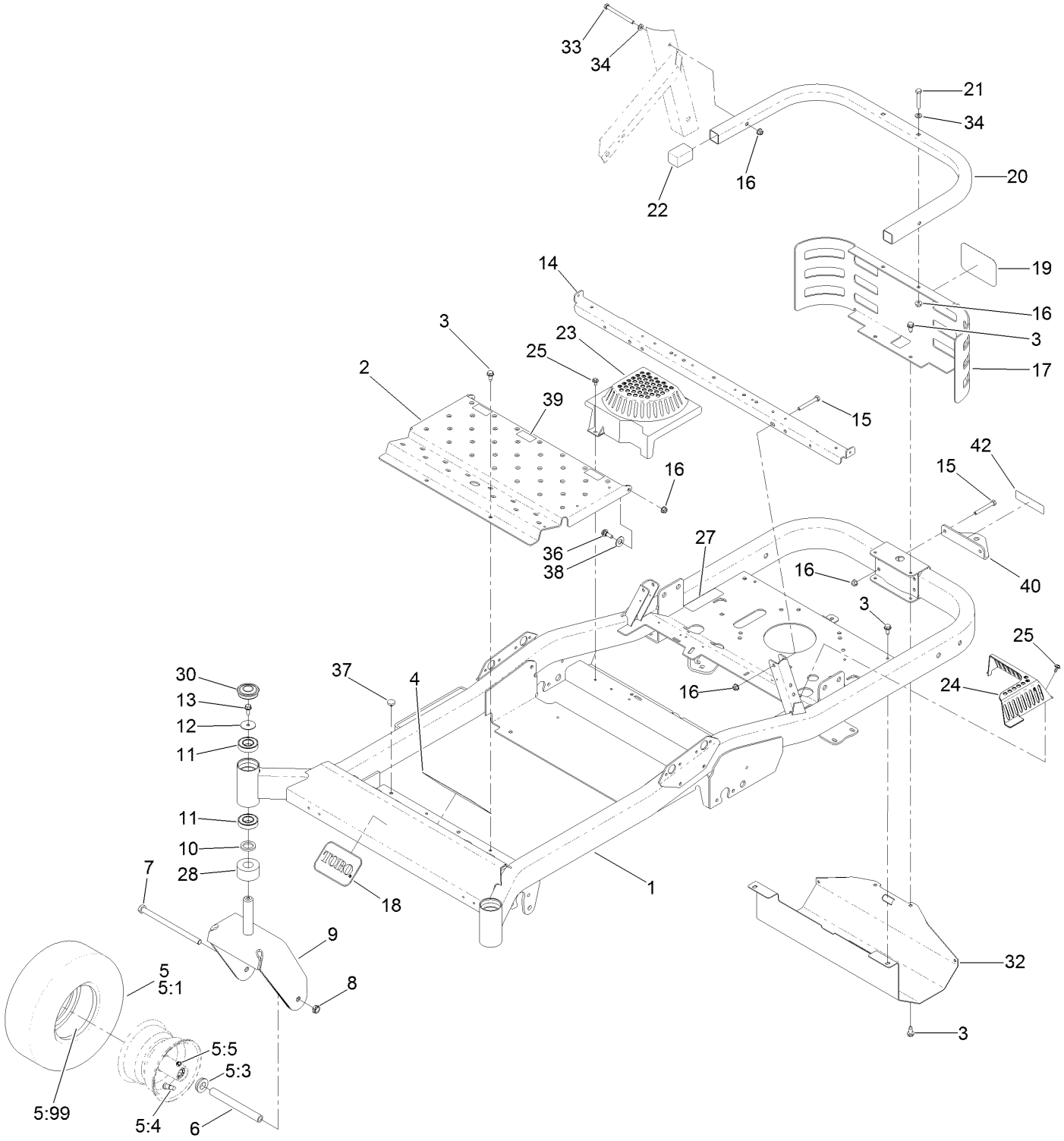

Frame, Front Axle and Caster Wheel Assembly (continued)

Ref.	Part Number	Qty.	Description
1	131-4039-01	1	Frame ASM
2	127-3423-01	1	Pan-Floor
3	32144-70	6	Screw-HWHTF
4	132-0871	1	Decal-Danger
5	127-3447	2	Tire And Wheel ASM
5:1	120-2252	1	Tire-13 Inch Smooth
5:3	114-1640	2	Bushing-Flange
5:4	232-27	1	Stem-Valve
5:5	302-5	1	Fitting-Grease
5:99	232-46	1	Tube
6	119-3475	2	Spanner
7	325-37	2	Screw-HH
8	3296-45	2	Nut-Lock, NI
9	127-3309-01	2	Fork-Caster
10	10-8110	2	Washer-Thrust
11	109-3678	4	Bearing-Ball
12	3256-68	2	Washer-Flat
13	3234-47	2	Screw-HHF
14	121-2953-03	1	Support-Seat
15	322-12	4	Screw-HH
16	104-8300	10	Nut-Flange, NI
17	120-2248-03	1	Guard-Rear
18	67-1300	1	Decal
19	105-8278	1	Decal
20	121-0704-01	1	Tube-Guard
21	322-10	2	Screw-HH
22	121-2980	2	Cap
23	117-1241	1	Cover-Fan, RH
24	117-1242	1	Cover-Fan, LH
25	46-8560	2	Screw-HHFTF
27	130-9833	1	Decal-Emissions
28	127-3330-01	2	Spacer-Caster
30	116-4348	2	Cap-Grease
32	131-4137-03	1	Shield-Heat
33	322-23	2	Screw-HH
34	3256-23	4	Washer-Flat
36	116-1297	2	Screw-Shoulder
37	1-513658	3	Bumper
38	112-9771	1	Washer-Teflon
39	130-0733	3	Pad-Rubber
40	117-1232-03	1	Bracket-Hitch
42	131-4036	1	Decal

Control Panel and Body Styling Pod Assembly

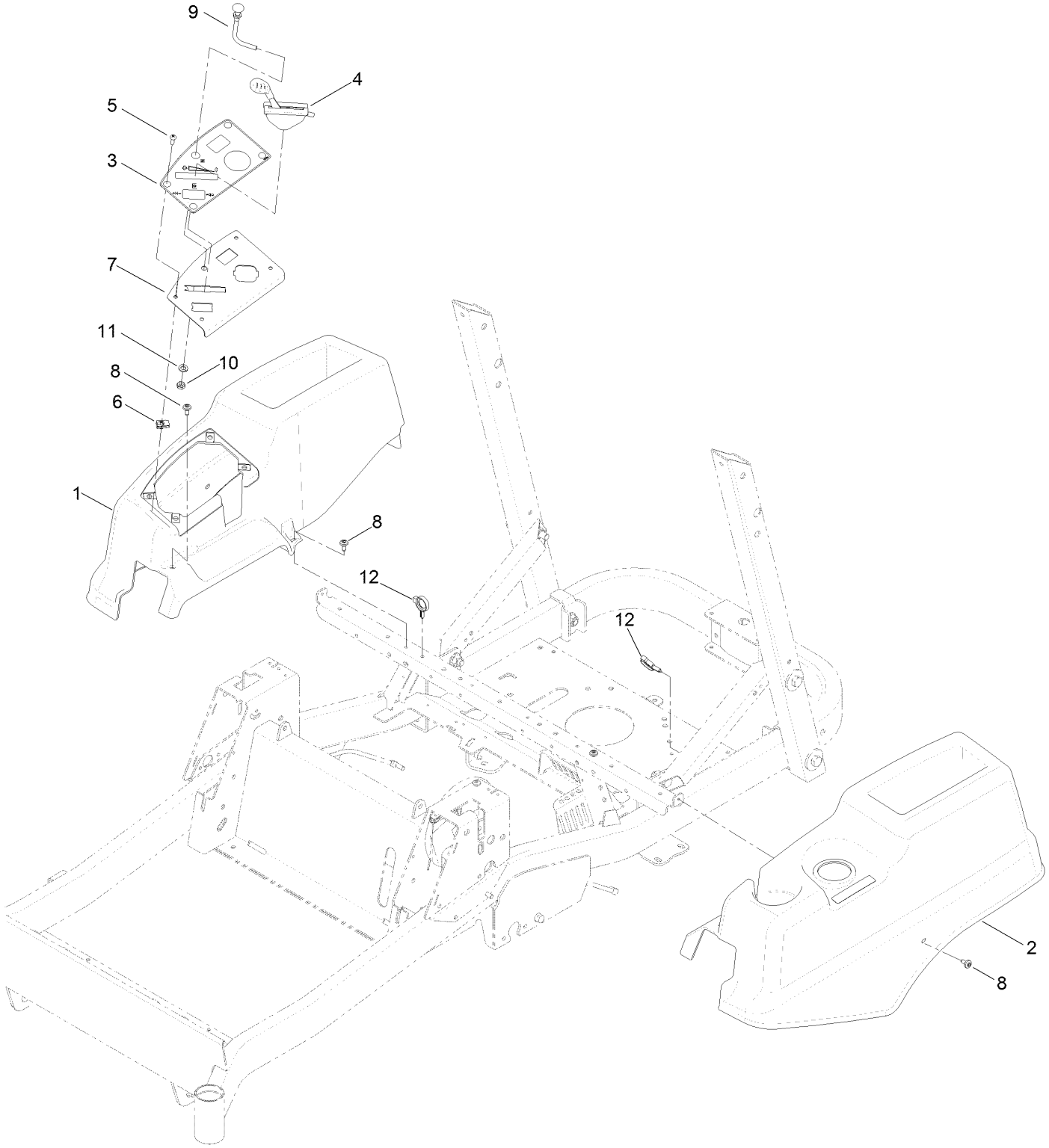

Control Panel and Body Styling Pod Assembly (continued)

Ref.	Part Number	Qty.	Description
1	120-5488	1	Pod-RH
2	120-5489	1	Pod-LH
3	115-9632	1	Decal-Panel, Control
4	131-1006	1	Cable-Throttle
5	3258-166	4	Screw-PRH
6	107069	4	Clip
7	115-2591-03	1	Panel-Control
8	120-7950	6	Screw-Shoulder
9	115-9656	1	Cable-Choke
10	3253-21	1	Washer-Lock
11	3220-3	1	Nut-HJ
12	105-1853	2	Clamp-Hose

Deck Lift Assembly

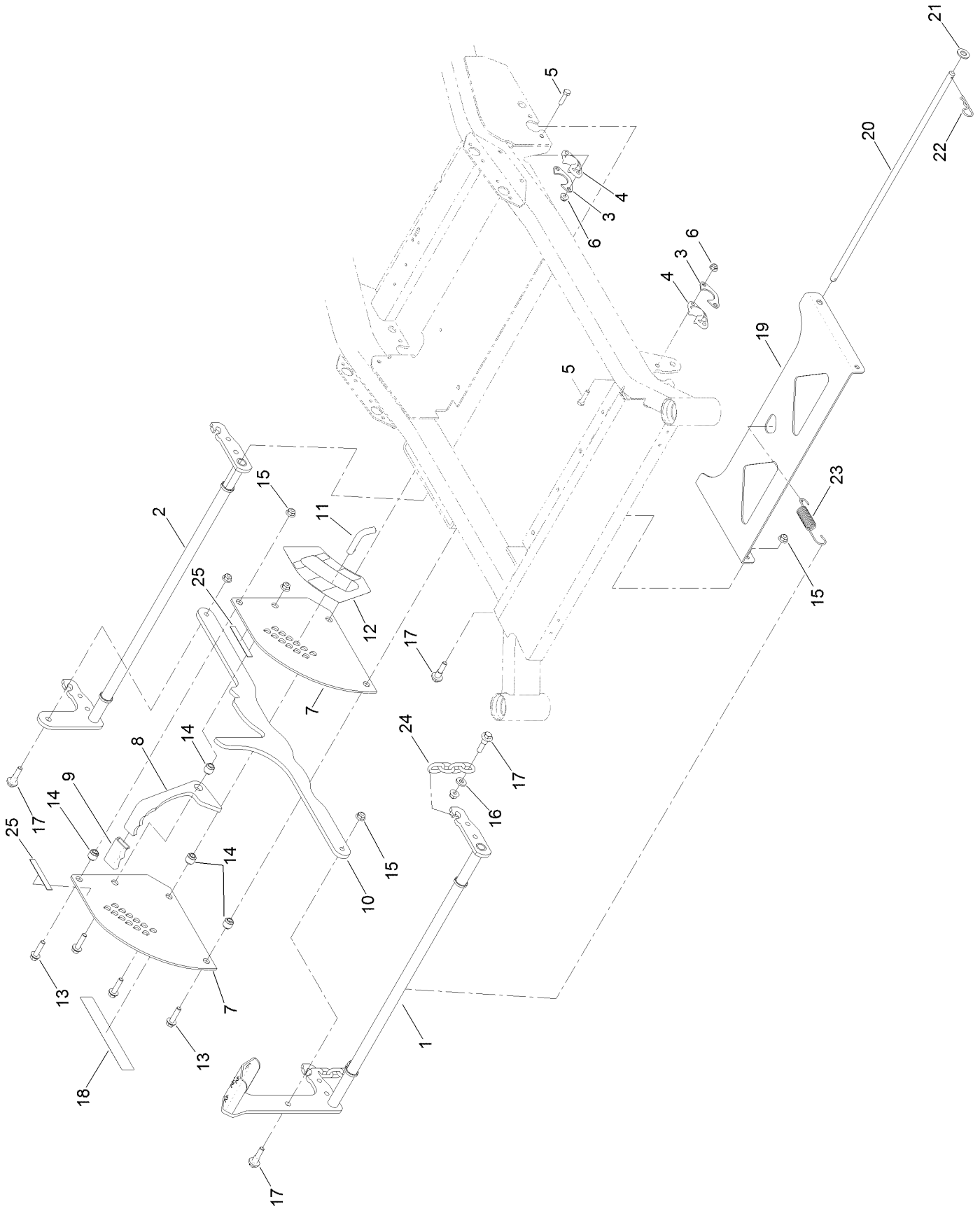

Deck Lift Assembly (continued)

Ref.	Part Number	Qty.	Description
1	131-4058-03	1	Pivot-Front
2	131-4059-03	1	Pivot-Rear
3	116-2887	4	Gusset-Lift, Deck
4	115-5065	4	Bushing-Flange
5	322-6	8	Screw-HH
6	104-8300	8	Nut-Flange, NI
7	127-3389-03	2	Plate-Deck, Lift
8	127-3391	1	Lock-Transport, HOC
9	116-4312	1	Grip-Bar, Flat
10	127-3390-03	1	Link-HOC
11	116-5584	1	Pin-HOC
12	130-0654	1	Decal-HOC
13	114-4681	4	Screw-HHF
14	116-4313	4	Spacer-Step, Double
15	104-8301	10	Nut-Flange, NI
16	43-0940	4	Spacer
17	130-0742	8	Bolt-Shoulder
18	130-0785	1	Decal
19	127-3329-01	1	Pan-Deck, Pivot
20	127-3399	1	Rod-Deck, Pivot
21	3256-26	2	Washer-Flat
22	1-806005	2	Pin-Cotter
23	115-9652	1	Spring-Extension
24	130-0668	4	Chain-Decklift
25	130-0734	2	Pad-Rubber

Seat Assembly

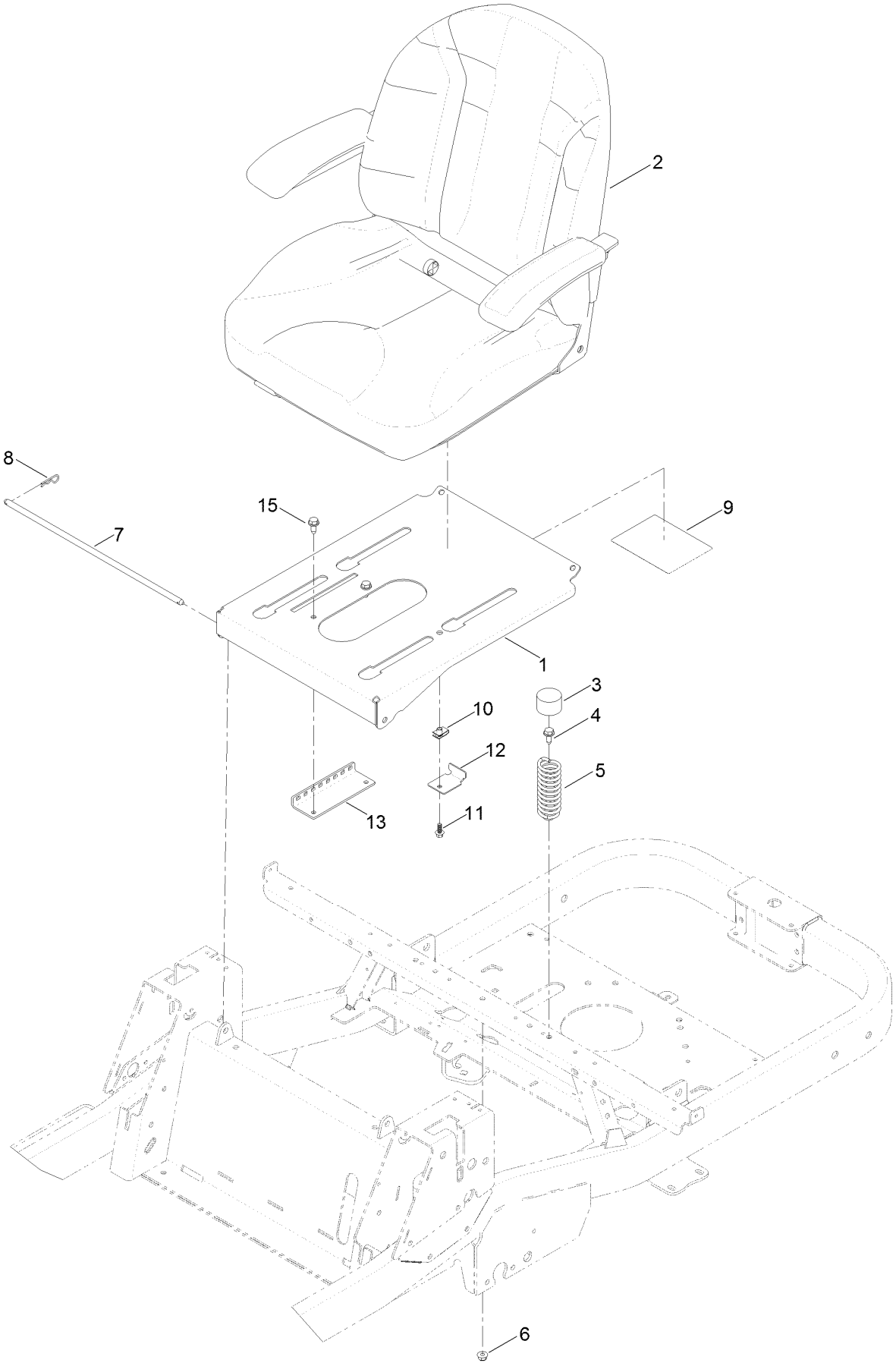

Seat Assembly (continued)

Ref.	Part Number	Qty.	Description
1	131-3944-03	1	Pan-Seat
2	131-4147	1	Seat ASM
3	701178	3	Cap-Protector
4	3234-47	3	Screw-HHF
5	92-7054	3	Spring-Compression
6	104-8300	3	Nut-Flange, NI
7	115-4966	1	Rod-Stop
8	3290-250	2	Pin-Cotter
9	130-6996	1	Decal-Maintenance
10	107069	1	Clip
11	99-6810	1	Screw-HHF
12	131-1038	1	Bracket-Stop, Seat
13	131-4008-03	1	Bracket-Latch, Seat
15	32144-70	2	Screw-HWHTF

Seat Assembly No. 131-4147

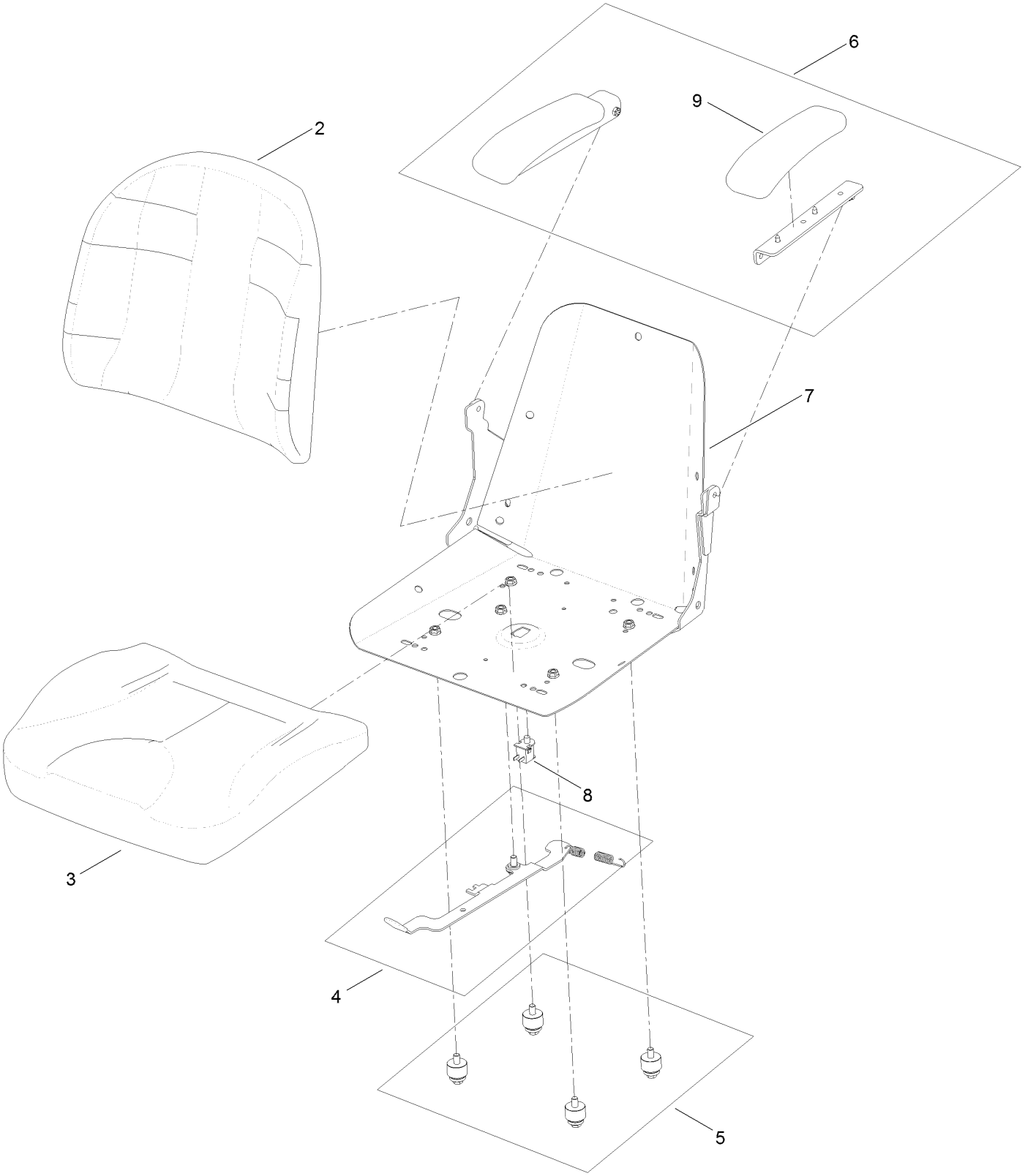

Seat Assembly No. 131-4147 (continued)

Ref.	Part Number	Qty.	Description
2	131-4149	1	Cushion-Seat, Back
3	131-4151	1	Cushion-Seat, Bottom
4	131-4153	1	Track ASM
5	131-4154	1	Bushing ASM
6	131-4155	1	Armrest Kit
7	131-4156	1	Shell
8	82-2190	1	Switch-Bail
9	110-4163	2	Cushion-Rest, Arm

Traction Drive Assembly

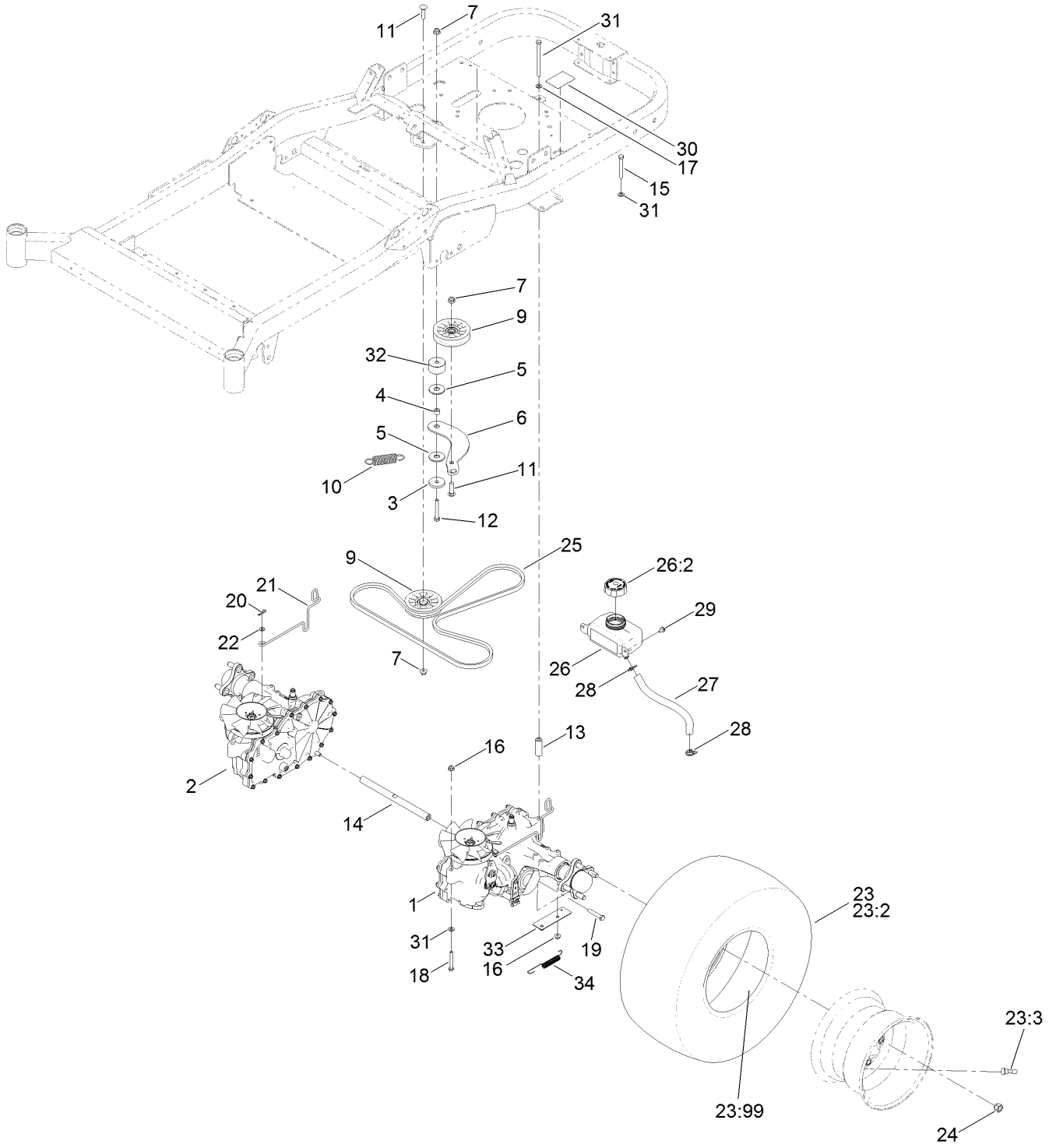

Traction Drive Assembly (continued)

Ref.	Part Number	Qty.	Description
1	127-3381	1	LH Hydro Transmission ASM
2	127-3382	1	RH Hydro Transmission ASM
3	110-9981	1	Washer-Plain
4	115-4986	1	Spacer
5	114-0463	2	Washer-Friction, Composite
6	117-5350	1	Arm-Idler
7	104-8301	3	Nut-Flange, NI
9	109-3397	2	Pulley-Idler, Flat
10	1-603402	1	Spring-Extension
11	3231-26	2	Screw-CARR
12	323-12	1	Screw-HH
13	109-3652	2	Spacer-Hydro
14	115-2559	1	Shaft-Cross, Hydro
15	322-13	4	Screw-HH
16	104-8300	8	Nut-Flange, NI
17	322-38	2	Screw-HH
18	322-11	2	Screw-HH
19	323-10	2	Screw-HH
20	1-806003	2	Pin-Cotter
21	125-8950	2	Rod-Bypass
22	119-8952	2	Washer
23	127-3449	2	Tire And Wheel ASM
23:2	125-1821	1	Tire
23:3	232-27	1	Stem-Valve
23:99	105-4070	1	Tube-Inner
24	242-50	8	Nut-Lug
25	115-9613	1	V-Belt
26	115-9618	1	HYD Reservior ASM
26:2	109-3320	1	Cap-Reservoir, HYD
27	115-4969	2	Hose-Overflow
28	117-1193	4	Clamp-Hose
29	46-8560	2	Screw-HHFTF
30	130-6922	2	Decal-Bypass
31	3256-23	8	Washer-Flat
32	117-5351	1	Spacer
33	117-7248-03	2	Plate-Spring
34	110769	2	Spring-Extension

LH Hydro Transmission Assembly No. 127-3381

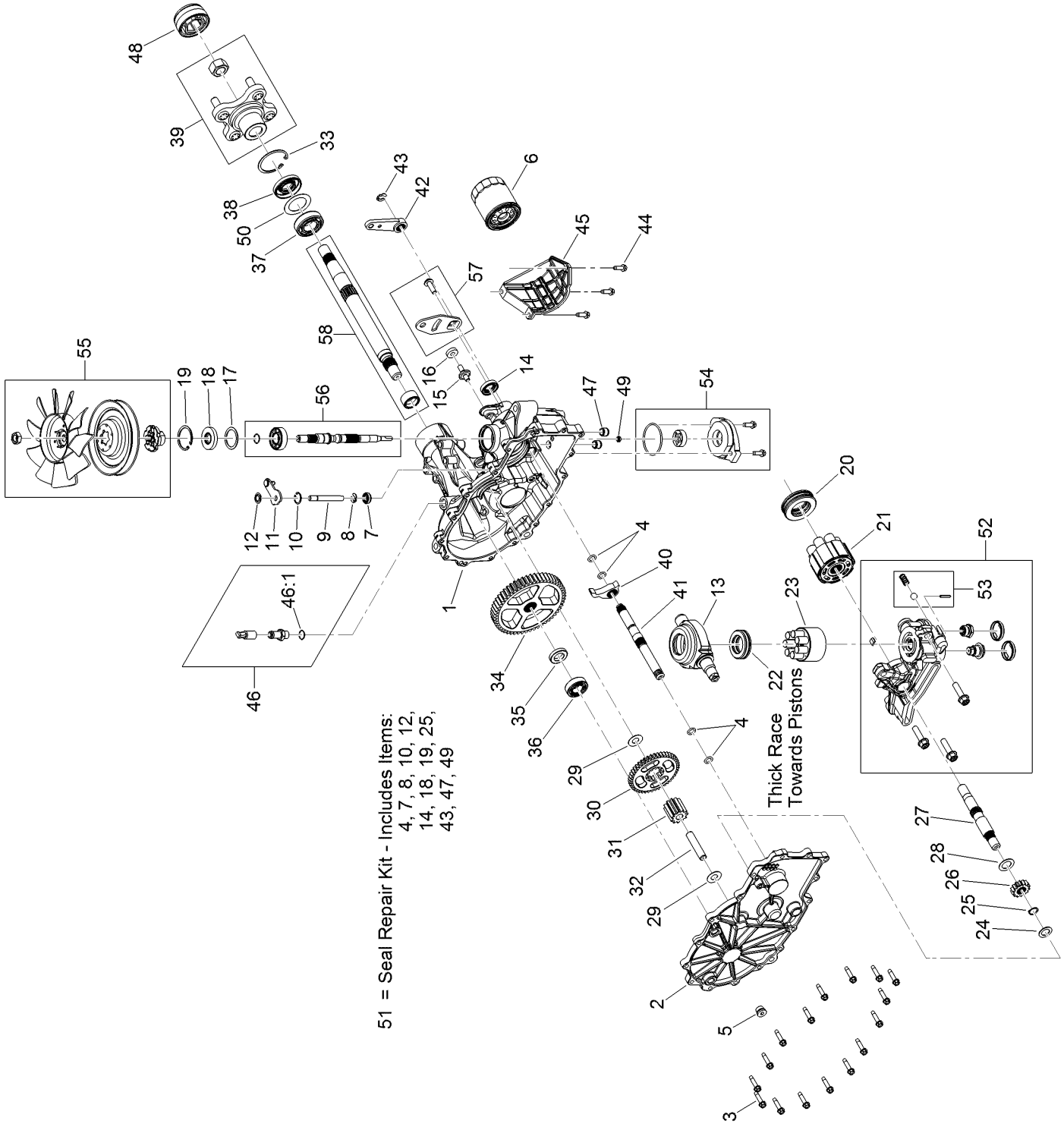

LH Hydro Transmission Assembly No. 127-3381 (continued)

Ref.	Part Number	Qty.	Description
1	114-8471	1	Main Housing Kit
2	114-8472	1	Side Cover Kit
3	117-5359	16	Screw-HHF
4	114-1678	4	O-Ring
5	104-2189	1	Plug-Thread, Straight
6	109-3321	1	Element-Oil Filter, HYD
7	106-8676	1	Seal-Lip
8	106-8677	1	Ring-Retaining, EXT
9	114-1685	1	Rod-Bypass
10	106-8679	1	Ring-Retaining, Int
11	107-2490	1	Arm-Bypass
12	106-8681	1	Ring-Retaining, EXT
13	104-5304	1	Swashplate-Trunnion
14	104-5313	1	Seal-Lip
15	104-2116	1	Stud
16	112-9853	1	Puck-Friction
17	104-5308	1	Spacer
18	104-5310	1	Seal-Lip
19	104-5309	1	Ring-Retaining
20	112-4154	1	Bearing-Thrust
21	114-1689	1	Motor Cylinder Block Kit
22	94-6922	1	Bearing-Thrust
23	110-8561	1	Pump Block ASM
24	104-5339	1	Washer-Flat
25	104-5340	1	Ring-Retaining
26	131-0905	1	Gear-14T
27	114-1691	1	Shaft-Motor
28	104-5360	1	Washer
29	94-1933	2	Washer
30	114-1692	1	Gear-45T
31	120-7974	1	Gear-11T
32	104-5329	1	Pin-Jackshaft
33	104-2169	1	Ring-Retaining
34	114-1694	1	Gear-54T
35	120-7975	1	Spacer
36	126-0789	1	Bearing-Ball
37	120-7976	1	Bearing-Ball
38	104-2144	1	Seal
39	109-5939	1	Hub Kit
40	114-1697	1	Pawl-Brake
41	131-0907	1	Shaft-Brake
42	125-0021	1	Handle-Brake
43	131-0906	1	Ring-Retaining, EXT
44	104-2120	3	Screw
45	120-7979	1	Guard-Filter, LH
46	109-3278	1	Adapter-Straight
46:1	237-42	1	O-Ring
47	114-8455	2	Tube-Connecting
48	115-5057	1	Cover-Nut, Axle
49	131-0908	1	Seal-Gerotor
50	121-5745	1	Spacer
51	109-3537	1	Seal Kit
52	131-0909	1	LH Center Section Charge Kit
53	114-8464	1	Charge Relief Kit
54	114-8465	1	Charge Kit
55	125-0059	1	Fan And Pulley Kit
56	117-5361	1	Input Shaft Kit
57	117-5362	1	Arm Control Kit
58	114-8470	1	Axle Shaft Kit

RH Hydro Transmission Assembly No. 127-3382

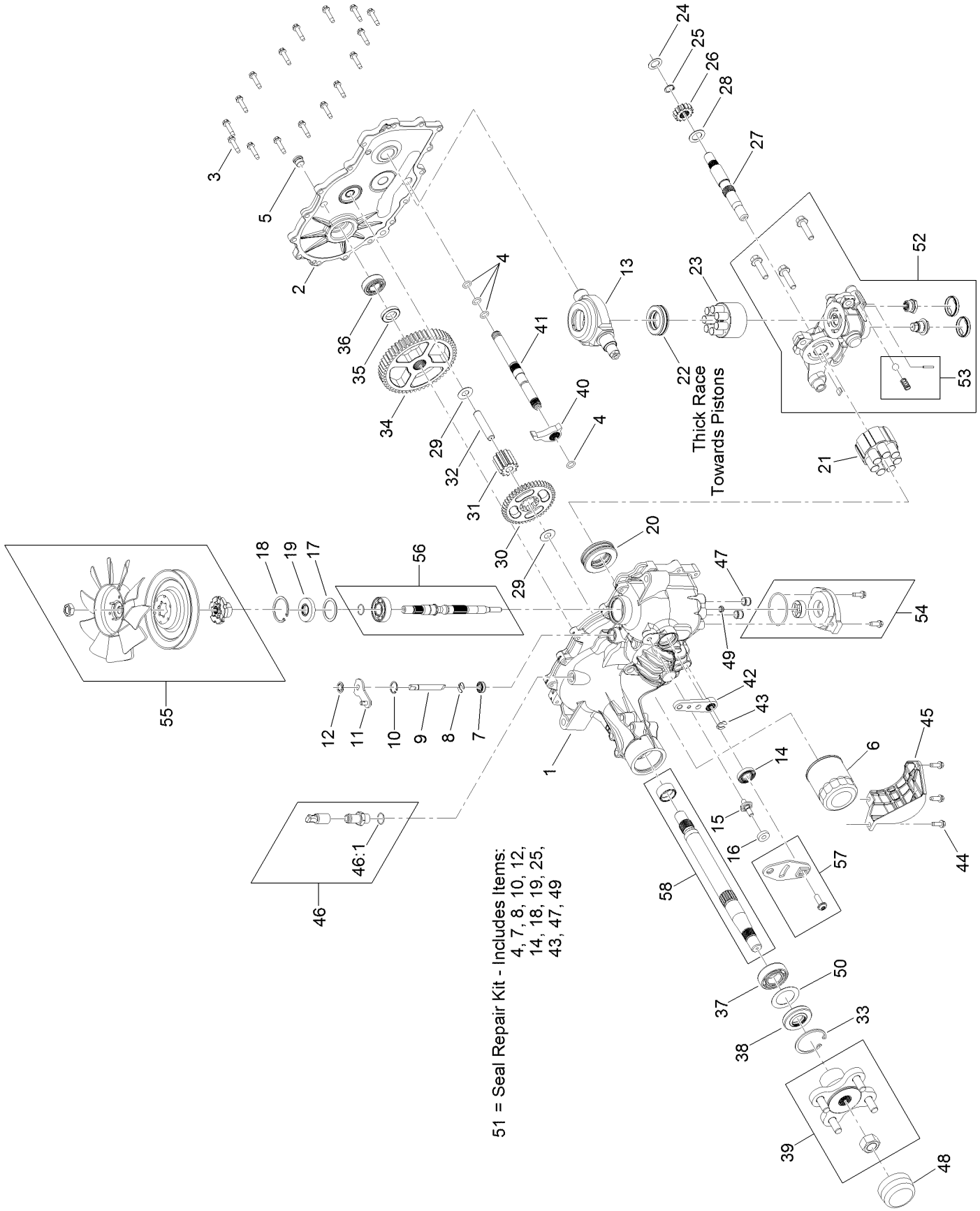

RH Hydro Transmission Assembly No. 127-3382 (continued)

Ref.	Part Number	Qty.	Description
1	114-1676	1	Main Housing Kit
2	117-5358	1	Housing Side Kit
3	117-5359	16	Screw-HHF
4	114-1678	4	O-Ring
5	104-2189	1	Plug-Thread, Straight
6	109-3321	1	Element-Oil Filter, HYD
7	106-8676	1	Seal-Lip
8	106-8677	1	Ring-Retaining, EXT
9	114-1685	1	Rod-Bypass
10	106-8679	1	Ring-Retaining, Int
11	107-2490	1	Arm-Bypass
12	106-8681	1	Ring-Retaining, EXT
13	104-5304	1	Swashplate-Trunnion
14	104-5313	1	Seal-Lip
15	104-2116	1	Stud
16	112-9853	1	Puck-Friction
17	104-5308	1	Spacer
18	104-5310	1	Seal-Lip
19	104-5309	1	Ring-Retaining
20	112-4154	1	Bearing-Thrust
21	114-1689	1	Motor Cylinder Block Kit
22	94-6922	1	Bearing-Thrust
23	110-8561	1	Pump Block ASM
24	104-5339	1	Washer-Flat
25	104-5340	1	Ring-Retaining
26	131-0905	1	Gear-14T
27	114-1691	1	Shaft-Motor
28	104-5360	1	Washer
29	94-1933	2	Washer
30	114-1692	1	Gear-45T
31	120-7974	1	Gear-11T
32	104-5329	1	Pin-Jackshaft
33	104-2169	1	Ring-Retaining
34	114-1694	1	Gear-54T
35	120-7975	1	Spacer
36	126-0789	1	Bearing-Ball
37	120-7976	1	Bearing-Ball
38	104-2144	1	Seal
39	109-5939	1	Hub Kit
40	114-1697	1	Pawl-Brake
41	131-0907	1	Shaft-Brake
42	125-0021	1	Handle-Brake
43	131-0906	1	Ring-Retaining, EXT
44	104-2120	3	Screw
45	120-7981	1	Guard-Filter, RH
46	109-3278	1	Adapter-Straight
46:1	237-42	1	O-Ring
47	114-8455	2	Tube-Connecting
48	115-5057	1	Cover-Nut, Axle
49	131-0908	1	Seal-Gerotor
50	121-5745	1	Spacer
51	109-3537	1	Seal Kit
52	131-0910	1	RH Center Section Charge Kit
53	114-8464	1	Charge Relief Kit
54	114-8465	1	Charge Kit
55	125-0059	1	Fan And Pulley Kit
56	117-5361	1	Input Shaft Kit
57	117-5362	1	Arm Control Kit
58	114-8470	1	Axle Shaft Kit

Motion Control Assembly

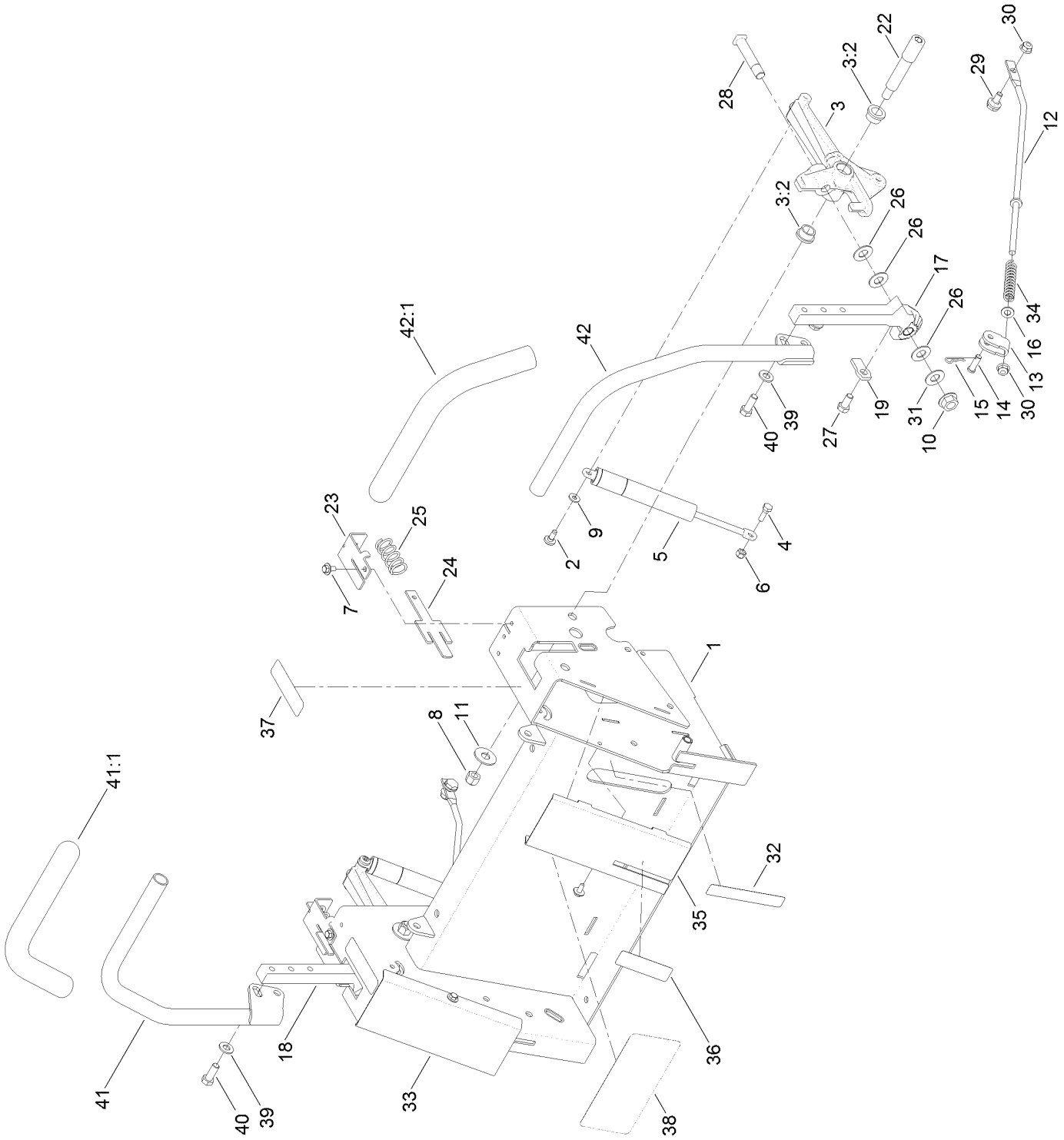

Motion Control Assembly (continued)

Ref.	Part Number	Qty.	Description
1	127-3282-03	1	Box-Control
2	120-7950	2	Screw-Shoulder
3	110-6828	2	Activator Arm ASM
3:2	105-3455	2	Bushing
4	106-2214	2	Bolt-Shoulder
5	131-0964	2	Damper
6	3296-42	2	Nut-Lock, NI
7	46-8560	4	Screw-HHFTF
8	3296-48	2	Nut-Lock, NI
9	119-8952	2	Washer
10	32128-23	2	Nut-HF
11	3256-5	2	Washer-Flat
12	117-7422	2	Rod-Control
13	117-7423	2	Bracket-Control
14	1-808280	2	Pin-Clevis
15	1-806003	2	Pin-Cotter
16	3256-23	2	Washer-Flat
17	110-6783-05	1	Arm-Actuator, LH
18	110-6782-05	1	Arm-Actuator, RH
19	115-5023	2	Tab-Stop
22	110-6875	2	Bolt-Shoulder
23	110-6751	2	Bracket-Return
24	110-6750	2	Plate-Return
25	110-6752	2	Spring-Compression
26	110-6894	6	Washer-Pivot
27	323-4	2	Screw-HH
28	110-6784	2	Bolt-Shoulder
29	37-8771	2	Bolt-Shoulder
30	104-8300	4	Nut-Flange, NI
31	112-9771	2	Washer-Teflon
32	130-0655	1	Decal-Fill, Fuel
33	117-1255-03	1	Cover-Control, RH
34	1-603807	2	Spring-Return, Neutral
35	115-2561-03	1	Cover-Control, LH
36	115-9625	1	Decal
37	99-8936	2	Decal-Control, Motion
38	127-3383	1	Decal-Titan Zx 4800
39	3256-24	4	Washer-Flat
40	323-6	4	Screw-HH
41	121-0731	1	Handle-Control, RH
41:1	121-0726	1	Grip
42	121-0730	1	Handle-Control, LH
42:1	121-0726	1	Grip

Brake Link Assembly

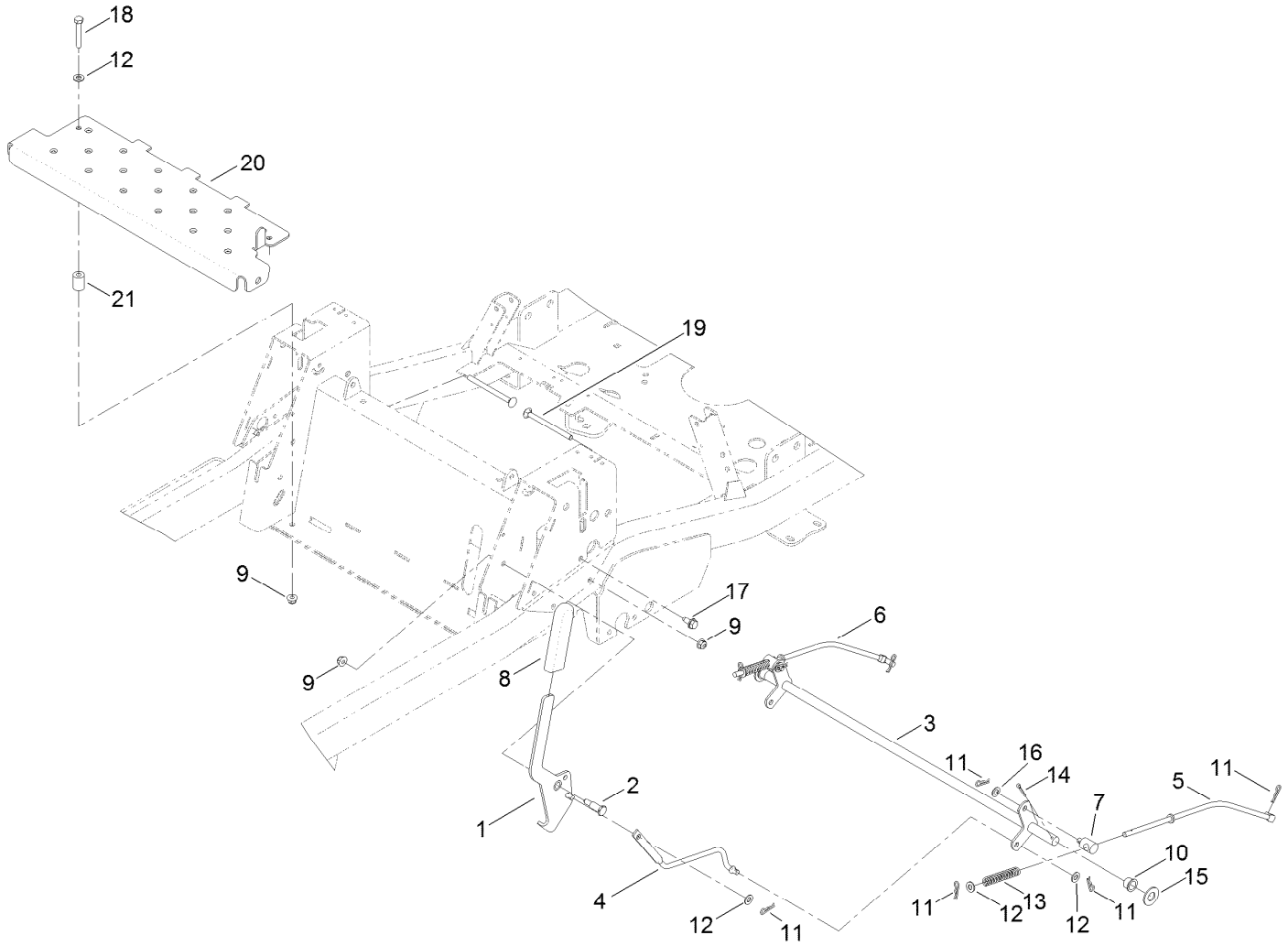

Brake Link Assembly (continued)

Ref.	Part Number	Qty.	Description
1	131-4057	1	Brake Handle ASM
2	63-2650	1	Screw-Shoulder
3	131-4056-03	1	Brake Bellcrank ASM
4	115-5074	1	Link-Brake
5	117-7322	1	Rod-Brake, LH
6	117-7323	1	Rod-Brake, RH
7	115-9681	2	Fitting-Rod
8	1-633268	1	Grip-Lever
9	104-8300	5	Nut-Flange, NI
10	256-292	2	Bushing-Flange, NI
11	1-806003	8	Pin-Cotter
12	3256-23	6	Washer-Flat
13	1-603807	2	Spring-Return, Neutral
14	3272-11	2	Pin-Cotter
15	3256-27	2	Washer-Flat
16	40-1940	2	Washer
17	32144-70	4	Screw-HWHTF
18	322-10	2	Screw-HH
19	106-9758	2	Screw-CARR
20	127-3435-01	1	Plate-Support, Floor Pan
21	119-0718	2	Spacer

Engine, Muffler and Clutch Assembly

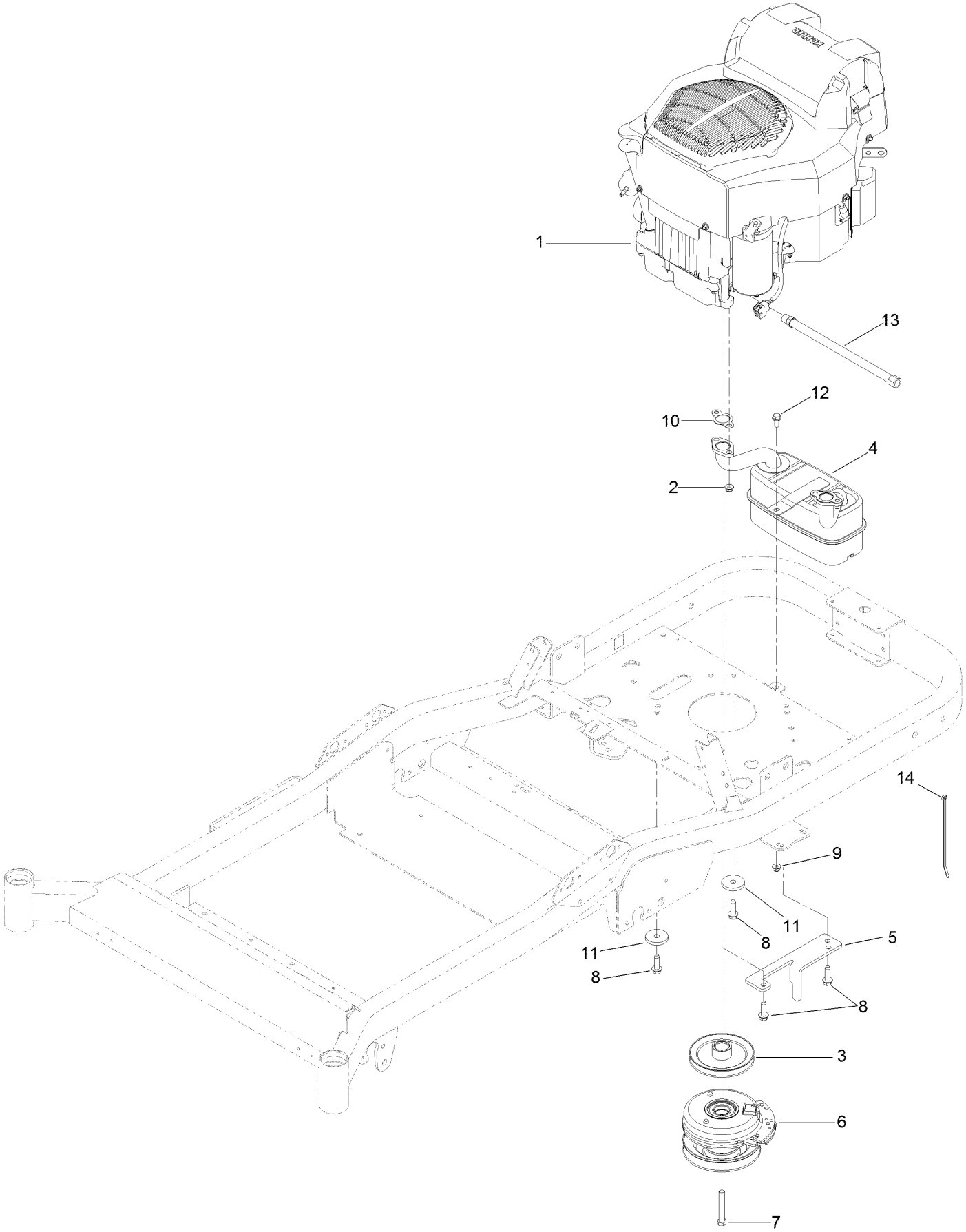

Engine, Muffler and Clutch Assembly (continued)

Ref.	Part Number	Qty.	Description
1		1	Engine-Kohler, Zt720-3018 ●■
2	131-8660	4	Nut-Locking, Exhaust
3	125-5576	1	Pulley-Engine
4	127-0084	1	Muffler
5	117-1269-03	1	Bracket-Stop, PTO
6	127-3410	1	Clutch-PTO
7	3212-11	1	Screw-HH
8	32144-109	4	Screw-Taptite
9	104-8300	1	Nut-Flange, NI
10	110-6697	2	Gasket-Exhaust
11	110-9981	2	Washer-Plain
12	3234-47	1	Screw-HHF
13	117-1261	1	Hose-Drain, Oil
14	614249	1	Tie-Cable

● Not serviced separately

■ Obtain parts from www.kohlerplus.com

Fuel Delivery Assembly

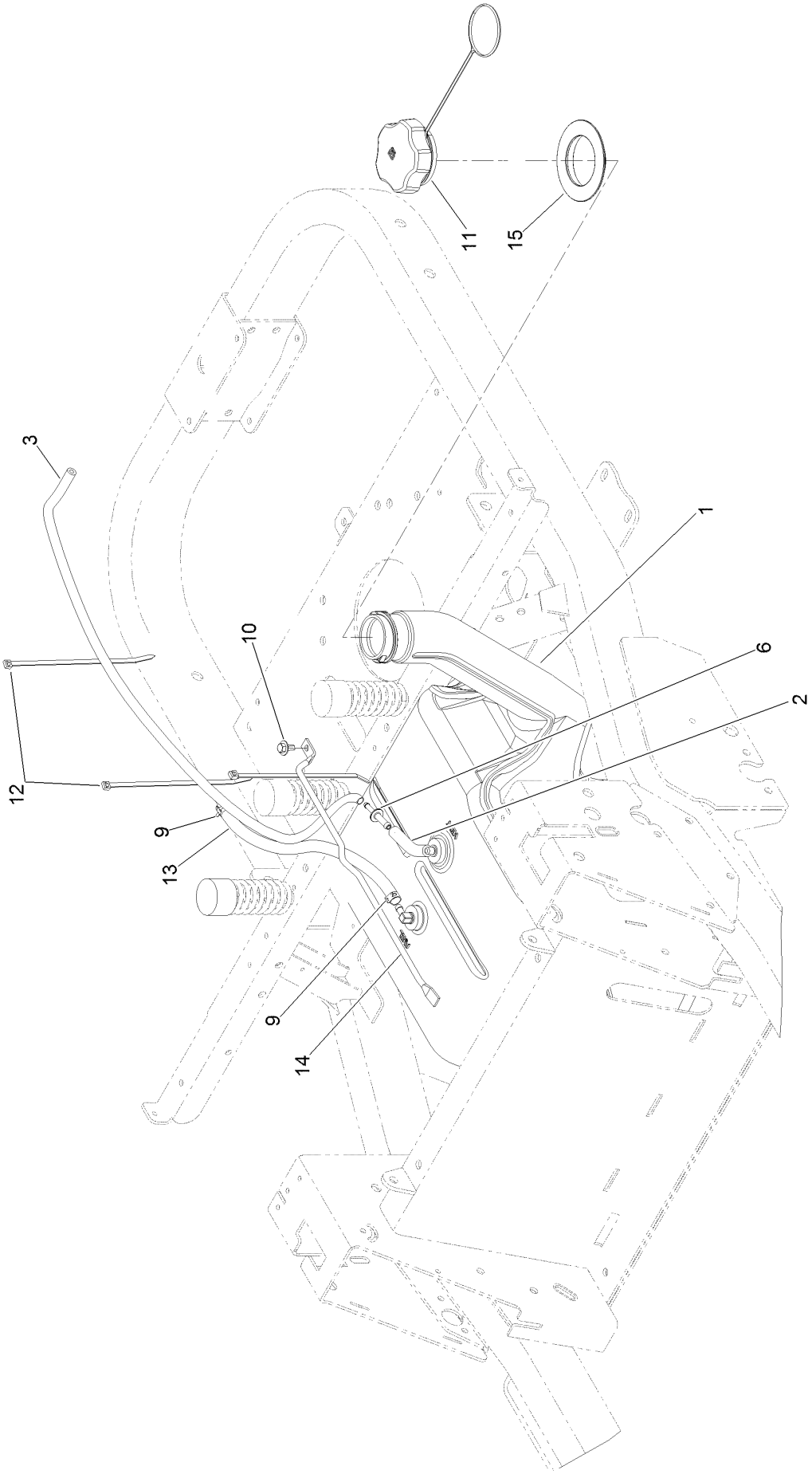

Fuel Delivery Assembly (continued)

Ref.	Part Number	Qty.	Description
1	117-7352	1	Fuel Tank ASM
2	114-3765	1	Hose-Fuel
3	131-8740	1	Hose-Fuel
6	121-0743	1	Adapter-Orifice
9	2412-98	2	Clamp-Hose
10	46-8560	1	Screw-HHFTF
11	125-1847	1	Cap-Fuel
12	614249	3	Tie-Cable
13	109-0299	1	Hose-Fuel
14	115-2620	1	Rod-Tank, Gas
15	117-1298	1	Seal-Tank

Multi Layer Fuel Tank Assembly No. 117-7352

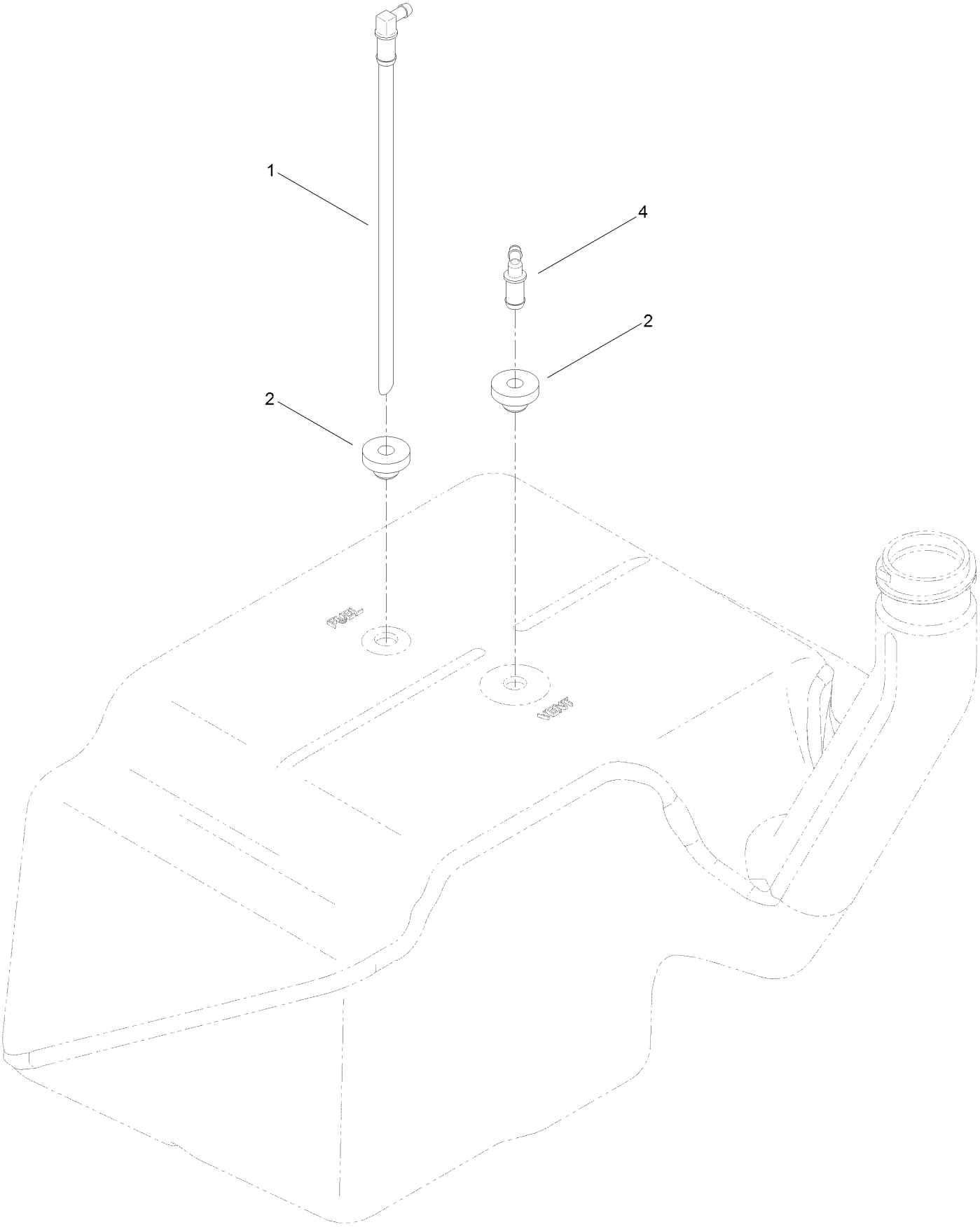

Multi Layer Fuel Tank Assembly No. 117-7352 (continued)

Ref.	*Part Number*	*Qty.*	*Description*
1	121-0793	1	Connector-Elbow, 90 DEG
2	46-6560	2	Bushing
4	117-7400	1	Fitting-Plastic

Roll-Over Protection System Assembly

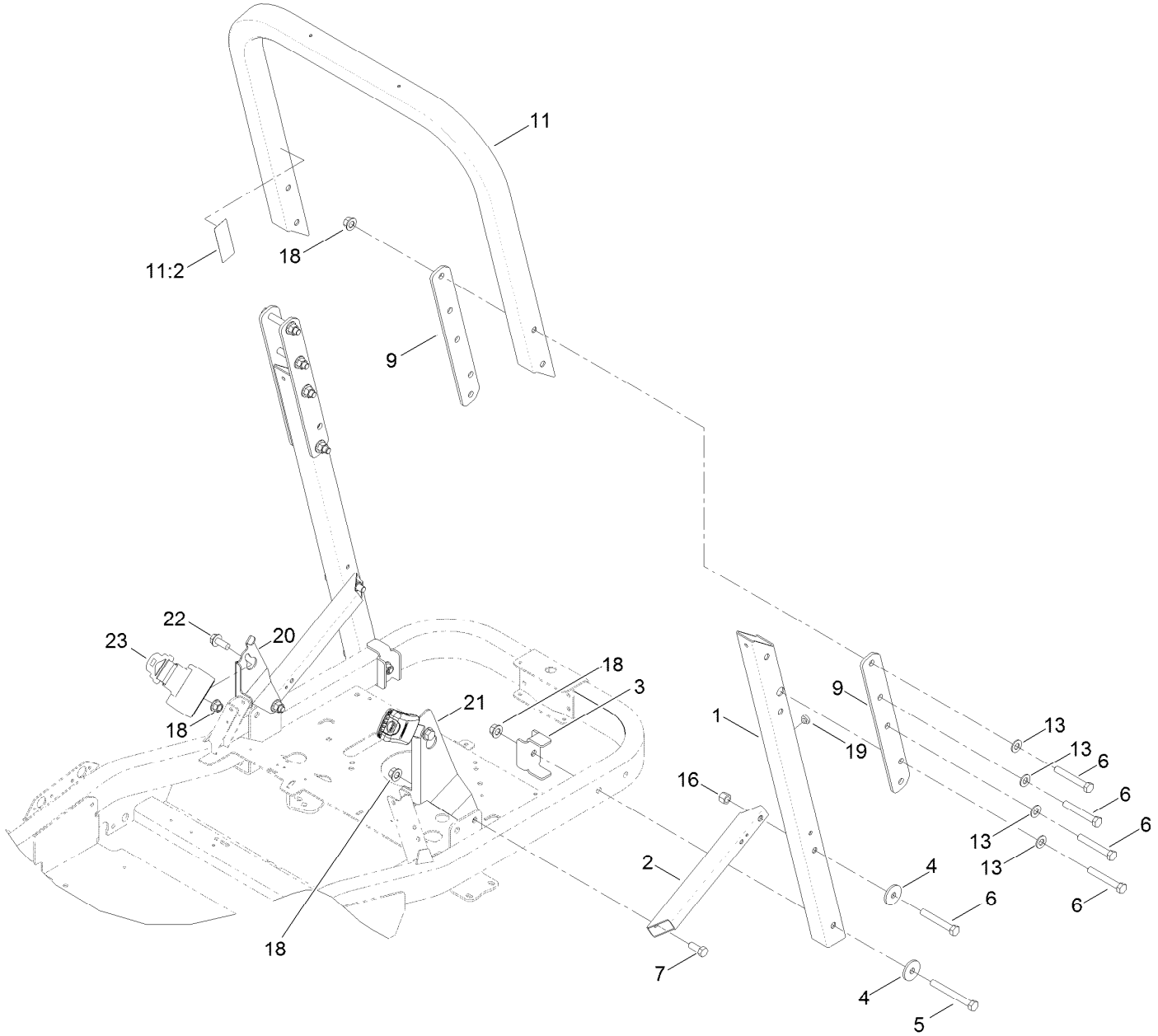

Roll-Over Protection System Assembly (continued)

Ref.	Part Number	Qty.	Description
1	121-2986-03	2	Tube-ROPS, Lower
2	115-4962-03	2	Tube-Support, ROPS
3	115-4963-03	2	Bracket-Reinforcing
4	84-1560	4	Washer-Thrust
5	325-18	2	Screw-HH
6	325-14	10	Screw-HH
7	325-5	2	Screw-HH
9	127-3326-03	4	Plate-ROPS
11	130-6929	1	Upper ROPS ASM

Ref.	Part Number	Qty.	Description
11:2	130-6927	1	Decal-ROPS, Warning
13	3256-26	8	Washer-Flat
16	119-8969	2	Nut-Hex
18	99-5107	12	Nut-Lock
19	1-513658	2	Bumper
20	115-5038-03	1	Bracket-Belt, Seat
21	115-5060-03	1	Bracket-Belt, Seat
22	3234-38	2	Screw-HHF
23	109-9805	1	Seat Belt Kit

Electrical Assembly

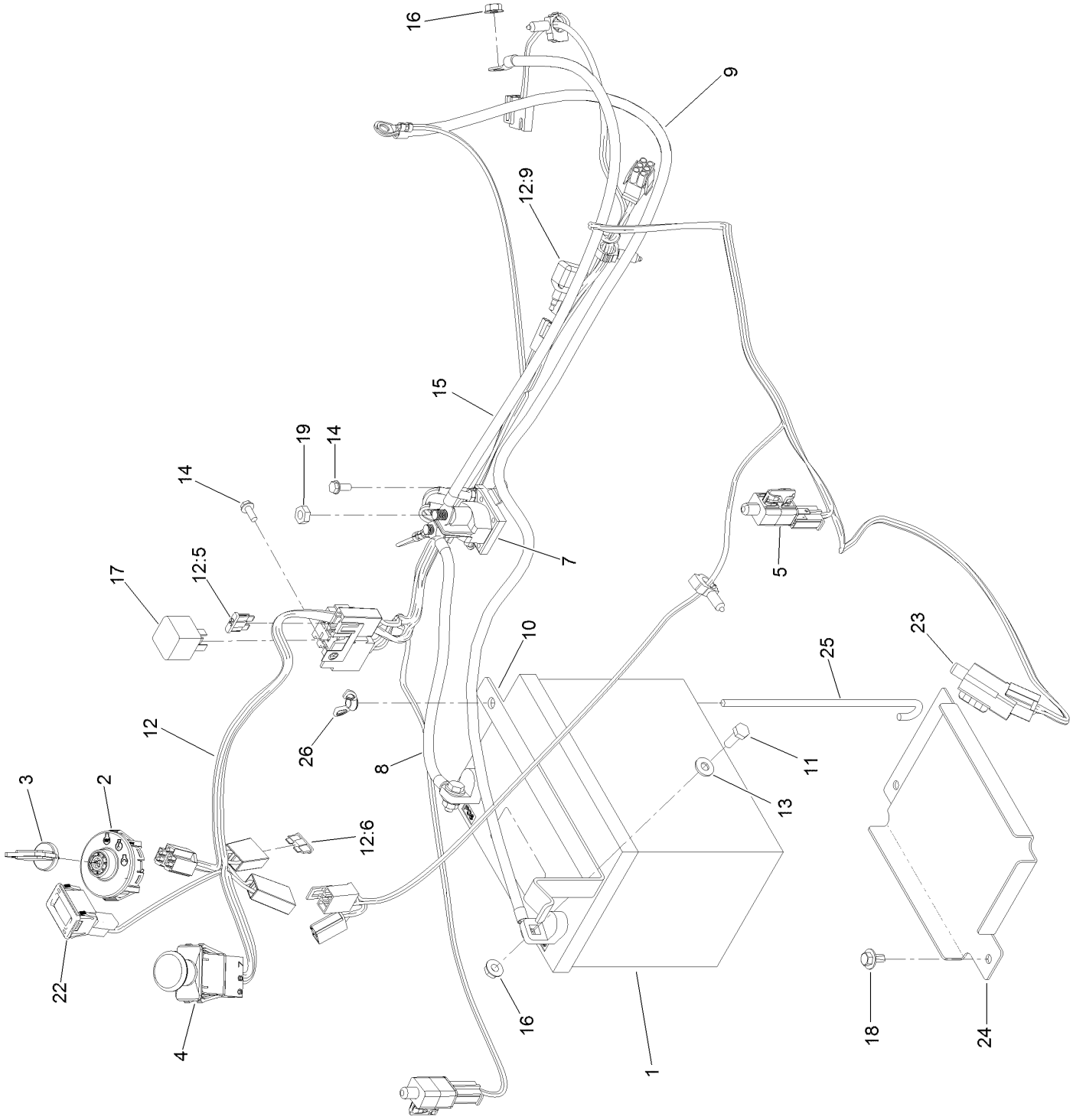

Electrical Assembly (continued)

Ref.	Part Number	Qty.	Description
1	105-1692	1	Battery-Dry
2	117-2221	1	Switch-Ignition
3	63-8360	1	Key-Ignition
4	103-5221	1	Switch-PTO
5	110-6765	2	Switch
7	117-1197	1	Solenoid
8	117-5342	1	Cable-Battery, Positive
9	117-7240	1	Cable-Battery, Negative
10	117-7313-01	1	Strap-Battery
11	321-4	2	Screw-HH
12	130-0651	1	Harness-Wire
12:5	109103	1	Fuse-Blade, 30 Amp
12:6	109102	1	Fuse-Blade, 25 Amp

Ref.	Part Number	Qty.	Description
12:9	100-4918	1	Diode-Over Molded
13	3256-22	2	Washer-Flat
14	32144-1	3	Screw-Taptite
15	92-6989	1	Wire-21 Inch
16	32128-33	3	Nut-HF
17	98-7249	1	Relay
18	46-8560	2	Screw-HHFTF
19	3220-2	2	Nut-Jam
22	120-2244	1	Hourmeter
23	99-7408	1	Switch-Reverse
24	117-1283-03	1	Tray-Battery
25	1-633651	1	Bolt-Holddown
26	1-543792	1	Wingnut

48 Inch Deck Assembly

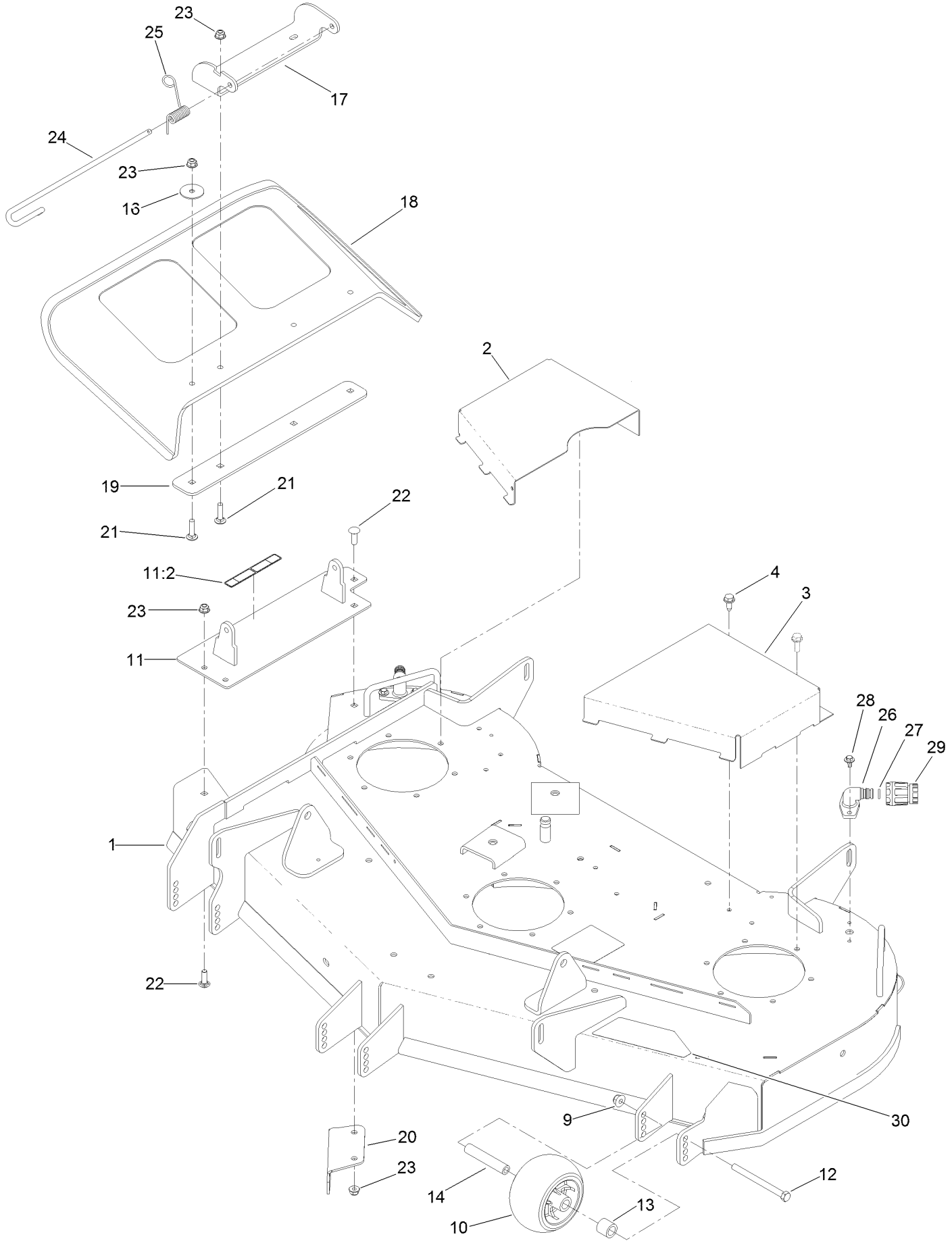

48 Inch Deck Assembly (continued)

Ref.	Part Number	Qty.	Description
1	131-4142	1	48 Inch Deck ASM
2	117-7396-05	1	Cover-Belt
3	117-7397-05	1	Cover-Belt
4	32144-70	2	Screw-HWHTF
9	104-8301	3	Nut-Flange, NI
10	1-603299	3	Roller-Scalp, Anti
11	130-0762	1	Pivot-Deflector
11:2	130-0731	1	Decal-Danger
12	323-23	3	Screw-HH
13	104-0892	3	Spacer-Axle, Rear
14	98-7912	3	Tube-Spanner
16	3256-68	2	Washer-Flat
17	114-1648-05	1	Bracket-Deflector, Upper

Ref.	Part Number	Qty.	Description
18	117-1270	1	Deflector
19	115-5048-03	1	Plate-Deflector
20	117-7418-03	1	Baffle-Cutoff
21	3230-3	4	Screw-CARR
22	3230-22	4	Screw-CARR
23	104-8300	8	Nut-Flange, NI
24	109-8854	1	Pin-Chute
25	121-2983	1	Spring-Torsion
26	95-2747	2	Fitting-Washout
27	46-6290	2	O-Ring
28	46-8560	4	Screw-HHFTF
29	95-3270	1	Connector-Hose
30	119-3382	1	Decal-Deck

48 Inch Deck and Decal Assembly No. 131-4142

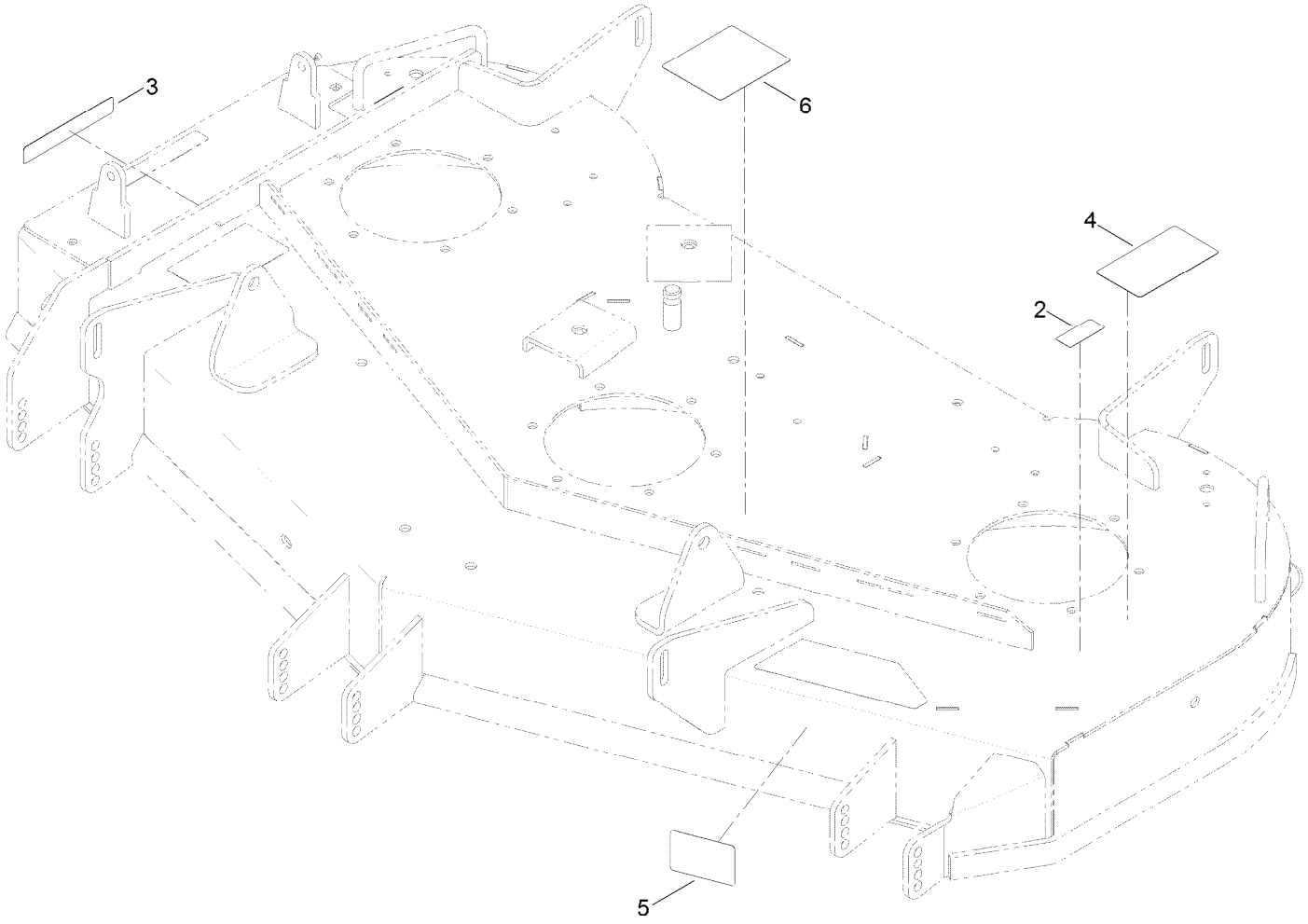

48 Inch Deck and Decal Assembly No. 131-4142 (continued)

Ref.	Part Number	Qty.	Description
2	114-1606	2	Decal-Danger
3	130-0731	1	Decal-Danger
4	130-6928	2	Decal-Danger
5	130-0765	1	Decal-Scalp, Anti
6	117-1194	1	Decal-Routing, Belt

48 Inch Deck, Belt and Mulch Blade Assembly

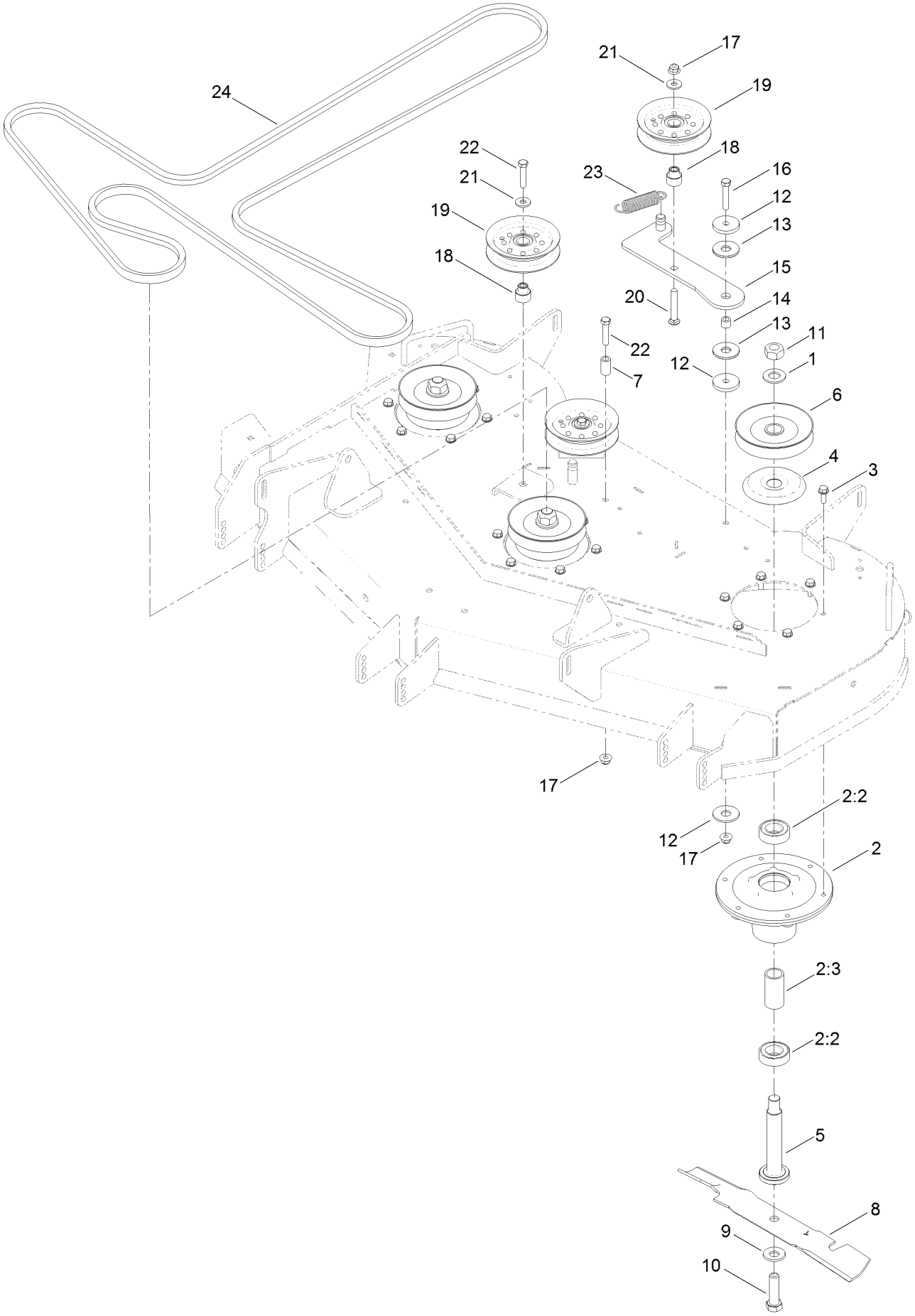

48 Inch Deck, Belt and Mulch Blade Assembly (continued)

Ref.	Part Number	Qty.	Description
1	7-4150	3	Washer
2	120-5477	3	Spindle ASM
2:2	116-0720	2	Bearing-Ball
2:3	115-2641	1	Spacer-Bearing
3	32144-41	18	Screw-Taptite
4	117-7210	3	Shield-Bearing
5	115-2642	3	Shaft-Spindle
6	117-7326	3	Pulley
7	1-603401	1	Spacer-Fender
8	117-7277-03	3	Blade-Hi Flo, 16.50 Inch
9	125-1736	3	Washer-Belleville
10	51-4060	3	Screw-Blade
11	3219-7	3	Nut-Hex
12	110-9981	3	Washer-Plain
13	114-0463	2	Washer-Friction, Composite
14	1-413088	1	Bushing-Lever, Lift
15	115-5054	1	Arm-Idler
16	323-10	1	Screw-HH
17	104-8301	3	Nut-Flange, NI
18	115-2577	3	Bushing-Idler
19	116-3626	3	Pulley-Idler
20	3231-31	1	Screw-CARR
21	80-6990	3	Washer-Hardened
22	323-9	3	Screw-HH
23	108-4056	1	Spring-Extension
24	117-7325	1	V-Belt

Attachments and Accessories

For 74861 TITAN ZX4800 Zero-Turn-Radius Riding Mower

Product Name	Model/Part
Spark Arrester Kit	131-4160
48in Recycler Kit	119-3320
Light Kit	117-5317
48in Striping Kit	119-3380
Leaf Bagging Enhancement Kit	119-3381
Transport Seat Hold Down Kit	117-7251
Cargo Carrier	79032
Front Weight Kit	79033
Seat Kit	130-0788
ROPS Conversion Kit	130-6850
MVP Filter	127-1628
Bagger Kit	79328
48in Bagger Finishing Kit (Used with 79328 Bagger)	121-5662
E-Z Vac Twin Bagger	79330
48in Blower and Drive Kit	79340

Notes:

Notes:

Notes:

TORO®

Count on it.