Form No. 3391-599 Rev A

TORO®

Count on it.

Operator's Manual

Commercial Walk-Behind Mower

Fixed Deck, T-Bar, Gear Drive with 32in, 36in or 48in Cutting Unit

Model No. 30672—Serial No. 315000001 and Up
Model No. 30674—Serial No. 315000001 and Up
Model No. 30678—Serial No. 315000001 and Up
Model No. 39674—Serial No. 315000001 and Up

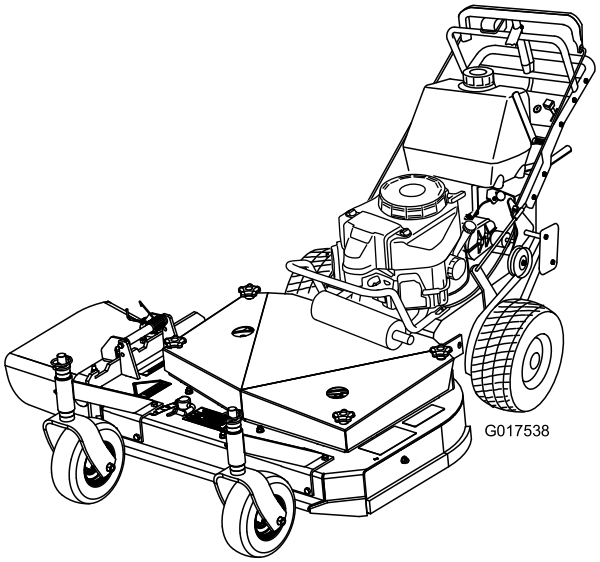

Register at www.Toro.com.
Original Instructions (EN)

3391-599 A

⚠ WARNING

CALIFORNIA
Proposition 65 Warning

This product contains a chemical or chemicals known to the State of California to cause cancer, birth defects, or reproductive harm.

The engine exhaust from this product contains chemicals known to the State of California to cause cancer, birth defects, or other reproductive harm.

This spark ignition system complies with Canadian ICES-002.

- **For Models 30672, 30674. and 30678:**

  Important: This engine is not equipped with a spark arrester muffler. It is a violation of California Public Resource Code Section 4442 to use or operate the engine on any forest-covered, brush-covered, or grass-covered land. Other states or federal areas may have similar laws.

- **For Model 39674:**

  Because in some areas there are local, state, or federal regulations requiring that a spark arrester be used on the engine of this machine, a spark arrester is incorporated with the muffler assembly.

  Genuine Toro spark arresters are approved by the USDA Forestry Service.

  Important: This engine is equipped with a spark arrester muffler. It is a violation of California Public Resource Code Section 4442 to use or operate the engine on any forest-covered, brush-covered, or grass-covered land without a spark arrester muffler maintained in working order, or the engine constricted, equipped, and maintained for the prevention of fire. Other states or federal areas may have similar laws.

⚠ WARNING

Removing standard original equipment parts and accessories may alter the warranty, traction, and safety of the machine. Failure to use original Toro parts could cause serious injury or death. Making unauthorized changes to the engine, fuel or venting system, may violate EPA and CARB regulations.

Replace all parts including, but not limited to, tires, belts, blades, and fuel system components with original Toro parts.

The enclosed *Engine Owner's Manual* is supplied for information regarding the US Environmental Protection Agency (EPA) and the California Emission Control Regulation of emission systems, maintenance, and warranty. Replacements may be ordered through the engine manufacturer.

Introduction

This rotary-blade, lawn mower is intended to be used by residential homeowners or professional, hired operators. It is designed primarily for cutting grass on well-maintained lawns on residential or commercial properties. It is not designed for cutting brush or for agricultural uses.

Read this information carefully to learn how to operate and maintain your product properly and to avoid injury and product damage. You are responsible for operating the product properly and safely.

You may contact Toro directly at www.Toro.com for product and accessory information, help finding a dealer, or to register your product.

Whenever you need service, genuine Toro parts, or additional information, contact an Authorized Service Dealer or Toro Customer Service and have the model and serial numbers of your product ready. Figure 1 identifies the location of the model and serial numbers on the product. Write the numbers in the space provided.

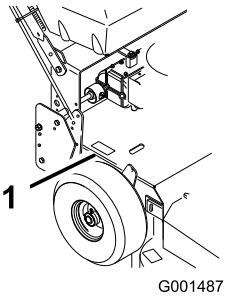

Figure 1

1. Model and serial number location

Model No. _____

Serial No. _____

This manual identifies potential hazards and has safety messages identified by the safety alert symbol (Figure 2), which signals a hazard that may cause serious injury or death if you do not follow the recommended precautions.

© 2014—The Toro® Company
8111 Lyndale Avenue South
Bloomington, MN 55420

Contact us at www.Toro.com.
Printed in the USA
All Rights Reserved

Figure 2

1. Safety alert symbol

This manual uses 2 words to highlight information. **Important** calls attention to special mechanical information and **Note** emphasizes general information worthy of special attention.

Contents

Safety 4
- Safe Operating Practices 4
- Toro Mower Safety 6
- Slope Indicator 7
- Safety and Instructional Decals 8

Product Overview 12
- Controls 12
- Specifications 13
- Attachments/Accessories 13

Operation 14
- Adding Fuel 14
- Using Fuel Stabilizer/Conditioner 14
- Filling the Fuel Tank 15
- Checking the Engine-Oil Level 15
- Putting Safety First 15
- Operating the Parking Brake 15
- Starting and Stopping the Engine 15
- Operating the Blade-Control Lever (PTO) 16
- The Safety-Interlock System 17
- Driving Forward or Backward 17
- Using the Lower Control Bar 17
- Stopping the Machine 18
- Transporting the Machine 18
- Adjusting the Flow Baffle 19
- Positioning the Flow Baffle 19
- Side Discharging or Mulching the Grass 20
- Adjusting the Height of Cut 20
- Adjusting the Handle Height 21
- Adjusting the Control Rods 22
- Height-of-Cut Chart 23

Maintenance 24
- Recommended Maintenance Schedule(s) 24
- Lubrication 25
  - Lubricating the Machine 25
  - Lubricating the Caster and Wheel Bearings 25
  - Greasing the Transmission Couplers 25
  - Greasing the Mower Belt Idler 25
- Engine Maintenance 26
  - Servicing the Air Cleaner 26
  - Servicing the Engine Oil 26
  - Servicing the Spark Plugs 28
- Fuel System Maintenance 29
  - Servicing the Fuel System 29
- Drive System Maintenance 31
  - Checking the Tire Pressure 31
- Cooling System Maintenance 31
  - Cleaning the Air-Intake Screen 31
  - Cleaning the Cooling System 31
- Brake Maintenance 32
  - Servicing the Brakes 32
- Belt Maintenance 33
  - Checking the Belts 33
  - Replacing the Traction Drive Belt 33
  - Replacing the Drive Belt 33
  - Replacing the Mower Belt 33
  - Adjusting the Mower Belt Tension 35

Mower Deck Maintenance.....38
Servicing the Cutting Blades.....38
Adjusting the Blade Brake.....41
Replacing the Grass Deflector.....42
Storage 42
Troubleshooting 44
Schematics 46

Safety

Note: The addition of attachments made by other manufacturers that do not meet American National Standards Institute certification will cause noncompliance of this machine.

Improperly using or maintaining the machine can result in injury. To reduce the potential for injury, comply with these safety instructions and always pay attention to the safety alert symbol, which means *Caution, Warning,* or *Danger*—personal safety instruction. Failure to comply with the instruction may result in personal injury or death.

Safe Operating Practices

The following instructions are adapted from ANSI B71.4-2012.

Training

- Read the *Operator's Manual* and other training material. If the operator(s) or mechanic(s) cannot read or understand the information it is the owner's responsibility to explain this material to them.
- Become familiar with the safe operation of the equipment, operator controls, and safety signs.
- All operators and mechanics should be trained. The owner is responsible for training the users.
- Never let children or untrained people operate or service the equipment. Local regulations may restrict the age of the operator.
- The owner/user can prevent and is responsible for accidents or injuries occurring to people or damage to property.

Preparation

- Evaluate the terrain to determine what accessories and attachments are needed to properly and safely perform the job. Use only accessories and attachments approved by the manufacturer.
- Wear appropriate clothing including hard hat, substantial, slip-resistant footwear, safety glasses, and hearing protection. Long hair, loose clothing, or jewelry may get tangled in moving parts.
- Inspect the area where the equipment is to be used and remove all objects such as rocks, toys, and wire, which can be thrown by the machine.
- Check that operator's presence controls, safety switches, and shields are attached and functioning properly. Do not operate unless they are functioning properly.

Operation

- Lightning can cause severe injury or death. If lightning is seen or thunder is heard in the area, do not operate the machine; seek shelter.
- Never run an engine in an enclosed area.
- Operate the machine only in good light, keeping away from holes and hidden hazards.
- Be sure that all drives are in neutral and the parking brake is engaged before starting the engine. Start the engine only from the operator's position.
- Be sure of your footing while using this machine, especially when backing up. Walk; do not run. Never operate on wet grass. Reduced footing could cause slipping.
- Slow down and use extra care on hillsides. Be sure to travel side to side on hillsides. Turf conditions can affect the stability of the machine. Use caution while operating near drop-offs.
- Slow down and use caution when making turns and when changing direction on slopes.
- Never raise the deck with the blades running.
- Never operate with the PTO shield or other guards not securely in place. Be sure all interlocks are attached, adjusted properly, and functioning properly.
- Never operate with the discharge deflector raised, removed or altered, unless you are using a grass catcher.
- Do not change the engine governor setting or overspeed the engine.
- Stop on level ground, disengage drives, engage the parking brake (if provided), and shut off the engine before leaving the operator's position for any reason, including emptying the catchers or unclogging the chute.
- Stop the equipment and inspect the blades after striking objects or if an abnormal vibration occurs. Make necessary repairs before resuming operation.
- Keep hands and feet away from the cutting unit.
- Look behind and down before backing up to be sure of a clear path.
- Never carry passengers on the machine.
- Keep pets and bystanders away.
- Slow down and use caution when making turns and crossing roads and sidewalks. Stop the blades if you are not mowing.
- Be aware of the mower discharge direction and do not point it at anyone.
- Do not operate the mower under the influence of alcohol or drugs.
- Use care when loading or unloading the machine into or from a trailer or truck.
- Use care when approaching blind corners, shrubs, trees, or other objects that may obscure vision.

Safe Handling of Fuels

- To avoid personal injury or property damage, use extreme care in handling gasoline. Gasoline is extremely flammable and the vapors are explosive.
- Extinguish all cigarettes, cigars, pipes, and other sources of ignition.
- Use only an approved fuel container.
- Never remove the fuel cap or add fuel with the engine running.
- Allow the engine to cool before refueling.
- Never refuel the machine indoors.
- Never store the machine or fuel container where there is an open flame, spark, or pilot light, such as on a water heater or on other appliances.
- Never fill containers inside a vehicle or on a truck or trailer bed with a plastic liner. Always place containers on the ground, away from your vehicle before filling.
- Remove equipment from the truck or trailer and refuel it on the ground. If this is not possible, refuel such equipment with a portable container rather than from a fuel dispenser nozzle.
- Keep the nozzle in contact with the rim of the fuel tank or container opening at all times until fueling is complete.
- Do not use a nozzle lock-open device.
- If fuel is spilled on clothing, change the clothing immediately.
- Never overfill fuel tank. Replace the fuel cap and tighten it securely.

Maintenance and Storage

- Disengage drives, set the parking brake, stop the engine and remove the key or disconnect the spark-plug wire. Wait for all movement to stop before adjusting, cleaning, or repairing the machine.
- Clean grass and debris from the cutting unit, the drives, the mufflers, and the engine to help prevent fires. Clean up oil or fuel spills.
- Let the engine cool before storing, and do not store it near a flame.
- Shut off the fuel while storing or transporting the machine. Do not store fuel near flames or drain it indoors.
- Park the machine on level ground. Set the parking brake. Never allow untrained personnel to service the machine.
- Use jack stands to support components when required.
- Carefully release pressure from components with stored energy.
- Disconnect the battery or the spark-plug wire before making any repairs. Disconnect the negative terminal first and the positive last. Connect the positive first and negative last.

- Use care when checking the blades. Wrap the blade(s) or wear gloves, and use caution when servicing them. Only replace blades. Never straighten or weld them.
- Keep hands and feet away from moving parts. If possible, do not make adjustments with the engine running.
- Keep all parts in good working condition and all hardware tightened. Replace all worn or damaged decals.
- To best protect your investment and maintain optimal performance of your Toro equipment, count on Toro genuine parts. When it comes to reliability, Toro delivers replacement parts designed to the exact engineering specifications of our equipment. For peace of mind, insist on Toro genuine parts.

Hauling

- Use care when loading or unloading the machine into a trailer or truck.
- Use full-width ramps for loading machine into trailer or truck.
- Tie the machine down securely using straps, chains, cable, or ropes. Both front and rear straps should be directed down and outward from the machine.

Toro Mower Safety

The following list contains safety information specific to Toro products and other safety information you must know.

This product is designed for cutting and recycling grass or, when equipped with a grass bagger, for catching cut grass. Any use for purposes other than these could prove dangerous to you and bystanders.

General Operation

- Be sure that the area is clear of other people before mowing. Stop the machine if anyone enters the area.
- Do not touch equipment or attachment parts which may be hot from operation. Allow them to cool before attempting to maintain, adjust, or service them.
- Use only Toro approved attachments. The warranty may be voided if you use the machine with unapproved attachments.
- Check carefully for overhead clearances (i.e. branches, doorways, electrical wires) before operating the machine under any objects, and do not contact them.

Slope Operation

All slopes and ramps require extra caution. If you feel uneasy on a slope, do not mow it.

- Remove obstacles such as rocks, tree limbs, etc. from the mowing area.
- Watch for holes, ruts, or bumps. Tall grass can hide obstacles.
- Use caution near drop-offs, ditches, or embankments. The machine could suddenly turn over if a wheel goes over the edge of a cliff or ditch, or if an edge caves in.
- Use extra care with grass catchers or other attachments. These can change the stability of the machine.
- Keep all movement on slopes slow and gradual. Do not make sudden changes in speed or direction.
- Mow slopes side to side.
- Do not mow slopes greater than 20 degrees.

Service

- Never store the machine or fuel container inside where there is an open flame, such as near a water heater or furnace.
- Keep nuts and bolts tight, especially the blade attachment bolts. Keep equipment in good condition.
- Never tamper with safety devices. Check safety systems for proper operation before each use.
- Use only genuine replacement parts to ensure that original standards are maintained.
- Check brake operation frequently. Adjust and service as required.

Slope Indicator

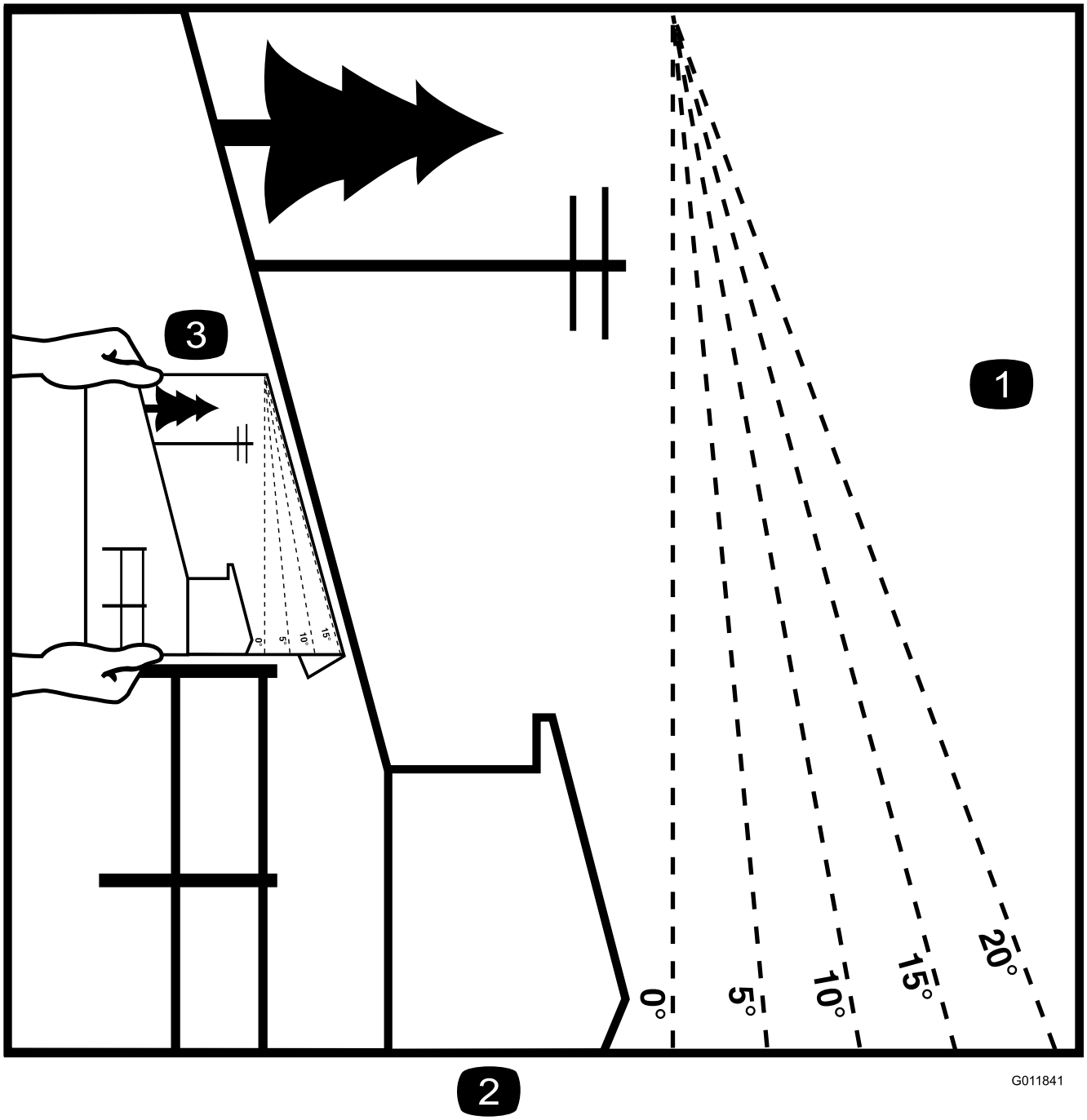

Figure 3

This page may be copied for personal use.

1. The maximum slope you can safely operate the machine on is **20 degrees**. Use the slope chart to determine the degree of slope of hills before operating. **Do not operate this machine on a slope greater than 20 degrees.** Fold along the appropriate line to match the recommended slope.
2. Align this edge with a vertical surface, a tree, building, fence pole, etc.
3. Example of how to compare slope with folded edge.

Safety and Instructional Decals

Safety decals and instructions are easily visible to the operator and are located near any area of potential danger. Replace any decal that is damaged or lost.

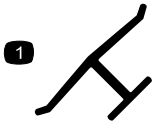

Manufacturer's Mark

1. Indicates the blade is identified as a part from the original machine manufacturer.

93-7010

1. Thrown object hazard—keep bystanders a safe distance from the machine.
2. Thrown object hazard, mower—keep the deflector in place.
3. Cutting/dismemberment of hand or foot—stay away from moving parts.

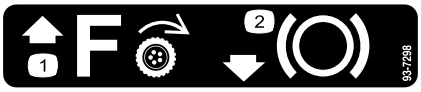

93-7298

1. Traction drive—forward
2. Pull to brake

93-7299

1. Traction drive—reverse

93-7442

1. Parking brake

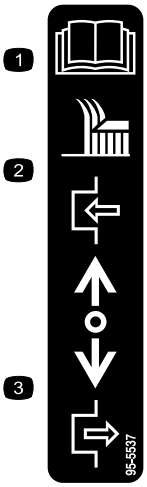

95-5537

1. Read the *Operator's Manual* for instructions on operating the cutting blade
2. Push forward to engage
3. Pull back to disengage

98-3264

1. Read the *Operator's Manual*.

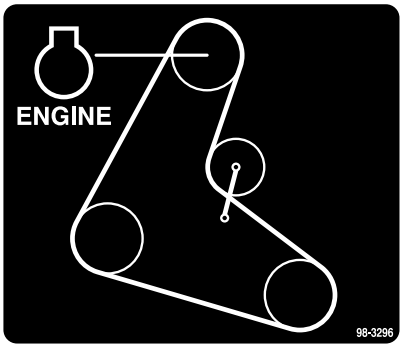

98-3296

For Models with 2–Blade Mower Decks

98-4387

1. Warning—wear hearing protection.

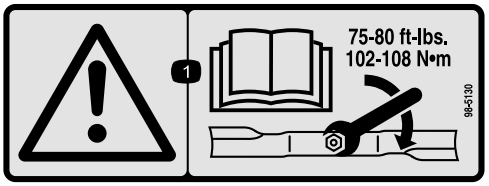

98-5130

1. Warning—read the *Operator's Manual* for instructions on torquing the blade bolt/nut to 75-80 ft-lb (102-106 N·m).

106-5517

1. Warning—do not touch the hot surface.

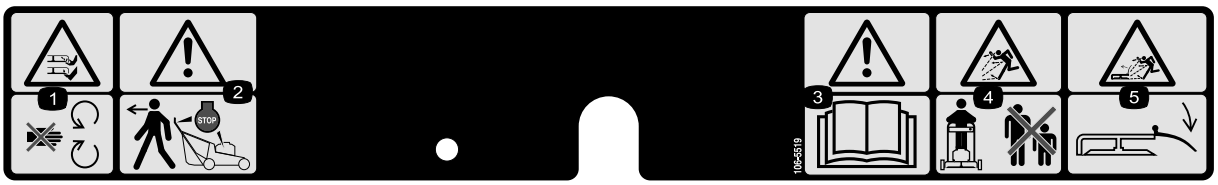

106-5519

1. Severing hazard of hand or foot, mower blade—stay away from moving parts.
2. Warning—release the bar and ensure the engine has stopped before walking away from the machine.
3. Warning—read the *Operator's Manual*.
4. Thrown object hazard—keep bystanders away from the machine.
5. Thrown object hazard, raised baffle—lower the baffle before using the machine.

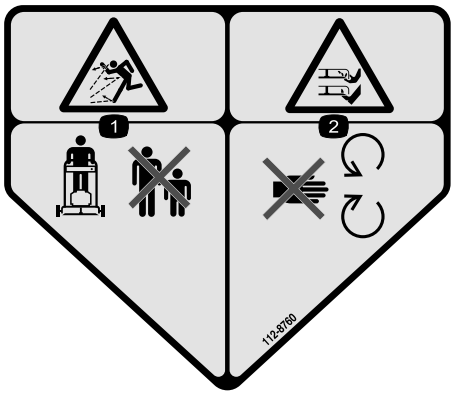

112-8760

1. Thrown object hazard—keep bystanders a safe distance from the machine.
2. Cutting/dismemberment of hand or foot—stay away from moving parts.

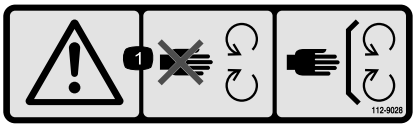

112-9028

1. Warning—stay away from moving parts; keep all guards in place.

CALIFORNIA SPARK ARRESTER WARNING

Operation of this equipment may create sparks that can start fires around dry vegetation. A spark arrester may be required. The operator should contact local fire agencies for laws or regulations relating to fire prevention requirements. 117-2718

117–2718

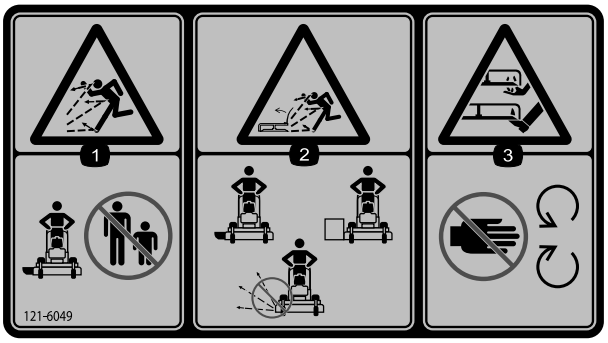

121-6049

1. Thrown object hazard—keep bystanders away from the machine.
2. Thrown object hazard, mower—do not operate the mower with guards or shields removed.
3. Cutting/dismemberment hazard of hand or foot, mower blade—keep hands away from moving parts.

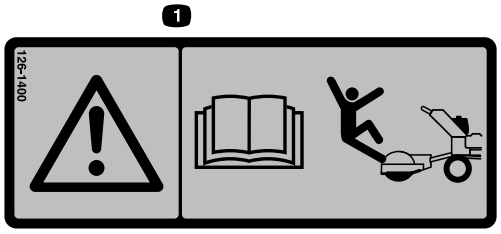

126-1400

1. Warning—Read the *Operator's Manual*. Use only Toro riding attachments. Use of other riding attachments may create a hazardous condition resulting in injury.

130-8374

1. Fast
2. Slow
3. Engine—stop
4. Engine—slow

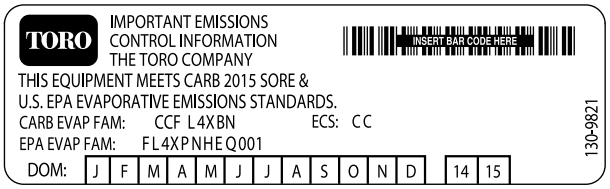

130-9821

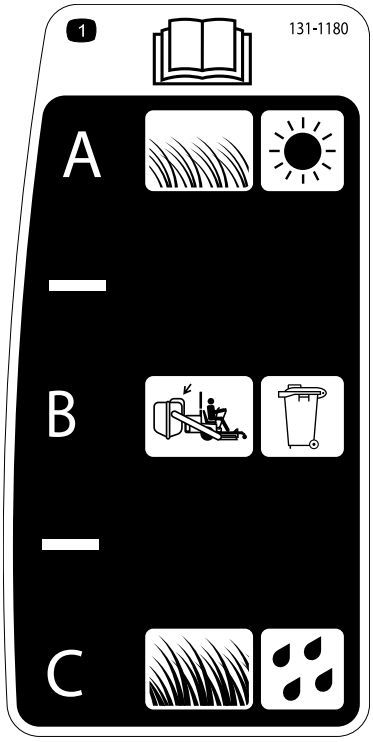

131-1180

1. Read the *Operator's Manual*. (A) Short, light grass; dry conditions; maximum dispersion; (B) Bagging setting; (C) Tall, dense grass; wet conditions; maximum ground speed

Product Overview

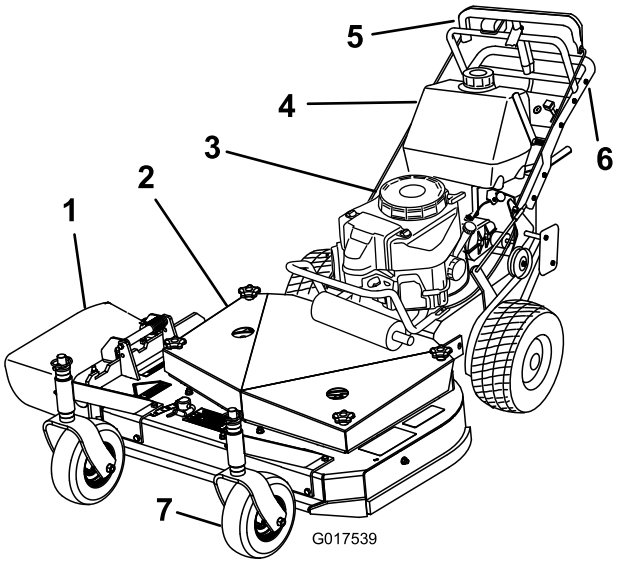

Figure 4

1. Side discharge
2. Mower deck
3. Recoil-start handle
4. Gas tank
5. T-bar control
6. Handle
7. Front caster wheel

Controls

Become familiar with all the controls (Figure 5) before you start the engine and operate the machine.

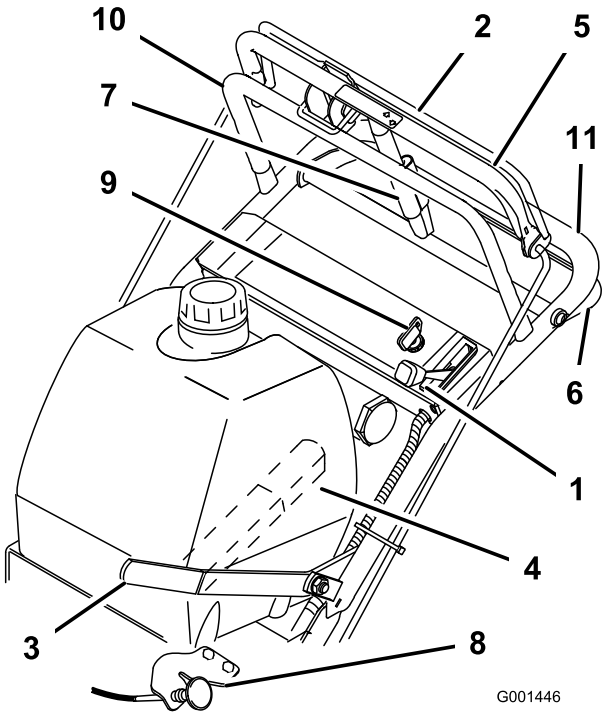

Figure 5

1. Throttle control
2. Blade-control bail
3. Power take-off lever (PTO)
4. Gear-shift lever
5. Upper control bar
6. Lower control bar
7. Parking brake lever—released position
8. Choke
9. Ignition switch
10. Upper handle
11. Lower handle

Throttle Control

The throttle control has 2 positions: **Fast** and **Slow**.

Blade-Control Bail

The bail is used in conjunction with the blade-control lever (PTO) to engage the clutch and drive the mower blades. Releasing the blade control bail will stop the engine with the PTO engaged.

Blade-Control Lever (PTO)

This lever is used in conjunction with the blade-control bail to engage and disengage the mower deck belt and drive the mower blades.

Gear-Shift Lever

The transmission has 5 forward speeds, neutral, and reverse, and has an in-line shift pattern.

Important: **Do not shift while the machine is moving, as transmission damage may occur.**

Upper Control Bar

Shift to the desired gear and push forward on the upper control bar and blade control bail to engage forward traction operation and pull back to brake forward movement. Pull back on right side of upper control bar to turn right and left side to turn left.

Lower Control Bar

Shift transmission to reverse and squeeze the lower control bar and handle together to engage the rearward traction assist.

Parking-Brake Lever

Pull back on upper control bar and swing brake lever up against the upper handle to set the parking brake (Figure 5).

Ignition Switch

This switch is used in conjunction with recoil starter and has two positions: **Run** and **Off**.

Recoil-Start Handle

Pull the recoil-start handle to start the engine (not shown in Figure 4).

Fuel-Shutoff Valve

Close the fuel-shutoff valve when transporting or storing the machine.

Choke

Use the choke to start a cold engine.

Specifications

Note: Specifications and design are subject to change without notice.

32-inch Mowers

Width with deflector down	116 cm (46 inches)
Length	183 cm (72 inches)
Height	104 cm (41 inches)
Weight	181 kg (400 lb)

36-inch Mowers

Width with deflector down	118 cm (47 inches)
Length	188 cm (74 inches)
Height	104 cm (41 inches)
Weight	209 kg (460 lb)

48-inch Mowers

Width with deflector down	161 cm (63-1/2 inches)
Length	184 cm (72 inches)
Height	104 cm (41 inches)
Weight	226 kg (598 lb)

Attachments/Accessories

A selection of Toro approved attachments and accessories is available for use with the machine to enhance and expand its capabilities. Contact your Authorized Service Dealer or Distributor or go to www.Toro.com for a list of all approved attachments and accessories.

Operation

Adding Fuel

- For best results, use only clean, fresh (less than 30 days old), unleaded gasoline with an octane rating of 87 or higher ((R+M)/2 rating method).
- Ethanol: Gasoline with up to 10% ethanol (gasohol) or 15% MTBE (methyl tertiary butyl ether) by volume is acceptable. Ethanol and MTBE are not the same. Gasoline with 15% ethanol (E15) by volume is not approved for use. **Never use** gasoline that contains more than 10% ethanol by volume, such as E15 (contains 15% ethanol), E20 (contains 20% ethanol), or E85 (contains 85% ethanol). Using unapproved gasoline may cause performance problems and/or engine damage which may not be covered under warranty.
- **Do not** use gasoline containing methanol.
- **Do not** store fuel either in the fuel tank or fuel containers over the winter unless a fuel stabilizer is used.
- **Do not** add oil to gasoline.

⚠ DANGER

In certain conditions, fuel is extremely flammable and highly explosive. A fire or explosion from fuel can burn you and others and can damage property.

- **Fill the fuel tank outdoors, in an open area, when the engine is cold. Wipe up any fuel that spills.**
- **Never fill the fuel tank inside an enclosed trailer.**
- **Do not fill the fuel tank completely full. Add fuel to the fuel tank until the level is 25 mm (1 inch) below the bottom of the filler neck. This empty space in the tank allows the fuel to expand.**
- **Never smoke when handling fuel, and stay away from an open flame or where fuel fumes may be ignited by a spark.**
- **Store fuel in an approved container and keep it out of the reach of children. Do not buy more than a 30-day supply of fuel.**
- **Do not operate without the entire exhaust system in place and in proper working condition.**

⚠ DANGER

In certain conditions during fueling, static electricity can cause a spark, which can ignite the fuel vapors. A fire or explosion from fuel can burn you and others and can damage property.

- **Always place fuel containers on the ground away from your vehicle before filling.**
- **Do not fill fuel containers inside a vehicle or on a truck or trailer bed because interior carpets or plastic truck-bed liners may insulate the container and slow the loss of any static charge.**
- **When practical, remove fuel-powered equipment from the truck or trailer and fuel the equipment with its wheels on the ground.**
- **If this is not possible, then refuel such equipment on a truck or trailer from a portable container, rather than from a fuel-dispenser nozzle.**
- **If a fuel dispenser must be used, keep the nozzle in contact with the rim of the fuel tank or container opening at all times until fueling is complete.**

⚠ WARNING

Gasoline is harmful or fatal if swallowed. Long-term exposure to vapors can cause serious injury and illness.

- **Avoid prolonged breathing of vapors.**
- **Keep face away from nozzle and gas tank or conditioner opening.**
- **Keep gas away from eyes and skin.**

Using Fuel Stabilizer/Conditioner

Use a fuel stabilizer/conditioner in the machine to keep the fuel fresh during storage of 90 days or less. If you are storing the machine for longer, drain the fuel tank; refer to Draining the Fuel Tank (page 29).

Important: Do not use fuel additives containing methanol or ethanol.

Add the correct amount of fuel stabilizer/conditioner to the fuel, and follow the directions of the manufacturer.

Note: Fuel stabilizer/conditioner is most effective when mixed with fresh gasoline. To minimize the chance of varnish deposits in the fuel system, use fuel stabilizer at all times.

Filling the Fuel Tank

1. Shut the engine off and set the parking brake.
2. Clean around the fuel-tank cap and remove the cap. Add unleaded regular gasoline to the fuel tank, until the level is 6 to 13 mm (1/4 to 1/2 inch) below the bottom of the filler neck. This space in the tank allows gasoline to expand. Do not fill the fuel tank completely full.
3. Install the fuel-tank cap securely. Wipe up any gasoline that may have spilled.

Checking the Engine-Oil Level

Before you start the engine and use the machine, check the oil level in the engine crankcase; refer to Checking the Engine-oil Level.

Putting Safety First

Carefully read all the safety instructions and decals in the safety section. Knowing this information could help you or any bystanders avoid injury.

The use of protective equipment for eyes, hearing, feet and head is recommended.

⚠ CAUTION

This machine produces sound levels in excess of 85 dBA at the operator's ear and can cause hearing loss through extended periods of exposure.

Wear hearing protection when operating this machine.

Figure 6

1. Warning—wear hearing protection.

Operating the Parking Brake

Stop on level ground, disengage drives, engage the parking brake, stop the engine, and remove the key. Always set the parking brake when you stop the machine or leave it unattended.

⚠ CAUTION

Children or bystanders may be injured if they move or attempt to operate the machine while it is unattended.

Always remove the ignition key and set the parking brake when leaving the machine unattended, even if just for a few minutes.

Setting the Parking Brake

1. Pull the upper control bar rearward and hold it in this position (Figure 7).
2. Lift the parking-brake lock up and gradually release the upper control bar. The brake lock should stay in the set (locked) position (Figure 7).

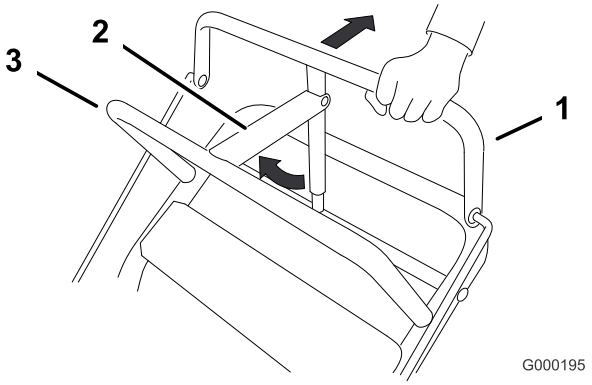

Figure 7

1. Upper control bar
2. Parking-brake lever—set position
3. Fixed bar

Releasing the Parking Brake

1. Pull rearward on the upper control bar. Lower the parking-brake lock to the released position.
2. Gradually release the upper control bar.

Starting and Stopping the Engine

Starting the Engine

1. Connect the wires to the spark plugs.
2. Open the fuel valve.
3. Disengage the blade-control (PTO) lever and move the shift lever to the Neutral position.
4. Set the parking brake.
5. Turn the ignition key to the Run position (Figure 8).
6. To start a cold engine, move the throttle control midway between the Fast and Slow positions.
7. To start a warm engine, move the throttle control to the Fast position.
8. Pull the choke knob to the On position if the engine is cold (Figure 8).

   Note: A warm or hot engine usually does not require using the choke.
9. Grasp the recoil starter handle firmly and pull it out until positive engagement results; then pull the handle vigorously to start the engine.

Note: Allow the rope to recoil slowly.

Important: Do not pull the recoil rope to its limit or release the starter handle when you pull out the rope because the rope may break or the recoil assembly may be damaged.

10. Push the choke to the Off position as the engine warms up.
11. If the engine is cold, allow it to warm up and then move the throttle control to the Fast position.

Stopping the Engine

Important: In an emergency, you can stop the engine immediately by turning the ignition key to the Off position.

1. Move the throttle lever to the Slow position (Figure 8).
2. Let the engine idle for 30 to 60 seconds before turning the ignition key to the Off position.
3. Turn the ignition key to the Off position (Figure 8).

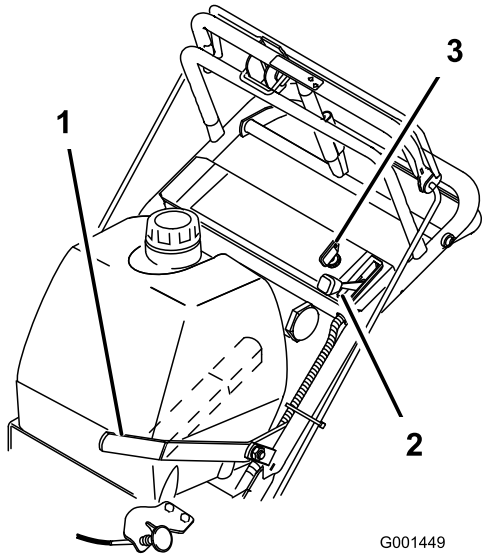

Figure 8

1. Blade-control lever (PTO)
2. Throttle lever
3. Ignition key

4. Set the parking brake and remove the key.
5. Disconnect the wires from the spark plugs to prevent the possibility of accidentally starting before storing or performing maintenance on the machine.
6. Close the fuel-shutoff valve before storing or transporting the machine.

Important: Make sure that the fuel-shutoff valve is closed before transporting or storing the machine, as fuel leakage may occur.

Operating the Blade-Control Lever (PTO)

The blade-control lever (PTO) engages and disengages power to the mower blades.

Engaging the Mower Blades

1. To engage the blades, squeeze the blade-control bail against the upper control bar (Figure 9).
2. Push the blade-control lever (PTO) firmly forward, until it latches over-center.
3. Start the engine and repeat the procedure to engage the mower blades if the blade-control bail is released.

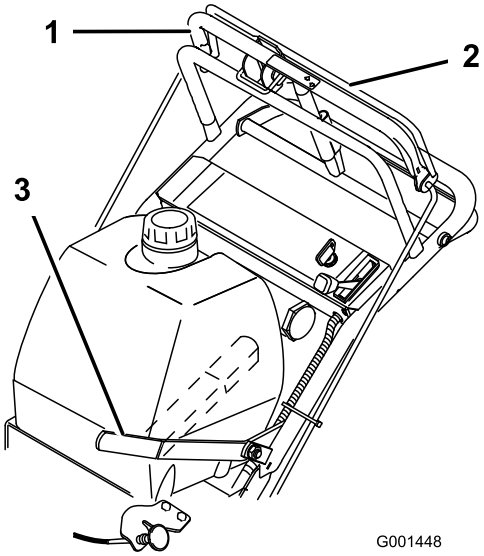

Figure 9

1. Upper control bar
2. Blade-control bail
3. Blade-control lever (PTO)

Disengaging the Mower Blades (PTO)

To disengage the blades, pull the blade-control lever (PTO) rearward all the way (Figure 9). The engine will stop when the blade-control bail is released with the blade-control lever engaged.

Note: It is necessary to fully and manually disengage the blade-control lever.

The Safety-Interlock System

⚠ CAUTION

If safety-interlock switches are disconnected or damaged the machine could operate unexpectedly, causing personal injury.

- **Do not tamper with the interlock switches.**
- **Check the operation of the interlock switches daily, and replace any damaged switches before operating the machine.**

The safety-interlock system is designed to prevent the engine from starting when:

- The blade-control lever (PTO) is engaged.
- The ignition key is in the off position.

The safety-interlock system is also designed to stop the engine when:

- The-blade control bail is released with the blade-control lever (PTO) engaged.
- The ignition switch is turned to the **off** position.

Testing the Safety-Interlock System

Test the safety-interlock system before you use the machine each time. If the safety system does not operate as described below, have an Authorized Service Dealer repair the safety system immediately.

1. Set the parking brake, disengage the PTO, and place the throttle forward.
2. Start the engine.
3. With the engine running squeeze the blade-control bail against upper control bar and push the mower-blade-control lever forward.

   Note: The mower blades should begin rotating.
4. With the engine running, release the blade-control bail.

   Note: The engine should stop.
5. Start the engine again.
6. With the engine running, turn the ignition key to the Off position.

   Note: The engine should stop.

Driving Forward or Backward

The throttle control regulates the engine speed as measured in rpm (revolutions per minute). Place the throttle control in the **fast** position for best mowing performance.

Driving Forward

1. To go forward, move the shift lever to a forward gear (Figure 10).
2. Release the parking brake; refer to Releasing the Parking Brake (page 15).
3. Slowly press on the upper control bar to move forward (Figure 10).

   To go straight, apply equal pressure to both ends of the upper control bar (Figure 10).

   To turn, release pressure on the upper control bar side in the direction you want to turn (Figure 10).

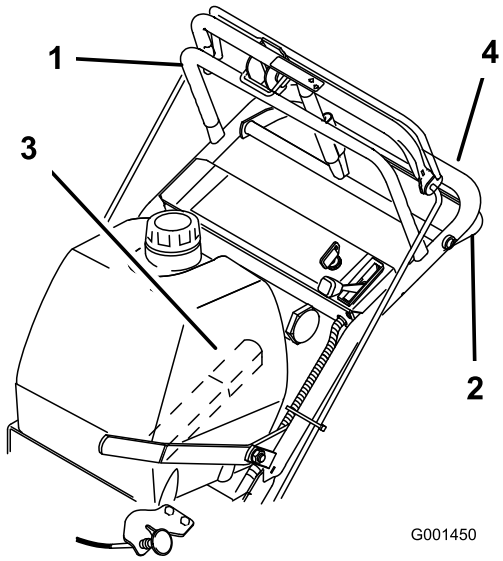

Figure 10

1. Upper control bar
2. Lower control bar
3. Shift lever
4. Lower handle

Driving Backward

1. To go backward, move the shift lever to the reverse gear.
2. Release the parking brake; refer to Releasing the Parking Brake (page 15).
3. Slowly squeeze the lower control bar and lower handle together to move rearward (Figure 10).

Using the Lower Control Bar

This procedure is for driving up a curb. This can be performed while driving forward or backward.

Note: Some curbs do not allow the rear drive tires to contact the curb. If this happens, drive the machine up the curb at an angle.

⚠ WARNING

A blade can be bent or damaged when driving up a curb. Pieces of blade that may be thrown could seriously injure or kill you or bystanders.

Do not run blades while driving up a curb forward or backward.

Driving Forward up a Curb

1. Disengage the mower blades.
2. Select the first gear to drive the machine.
3. Drive machine until the caster wheels contact the curb (Figure 11).
4. Lift the front of the machine by pushing down on the lower handle (Figure 11).
5. Drive the machine until the drive wheels contact the curb (Figure 11).
6. Lower the front of the machine (Figure 11).

   Note: Both drive wheels should contact the curb and caster wheels straight.

7. At the same time engage the lower control bar and lift up on the lower handle to drive over the curb (Figure 10 and Figure 11).

   Note: Lifting up on the lower handle will assist driving the machine up a curb and not spin the drive wheels.

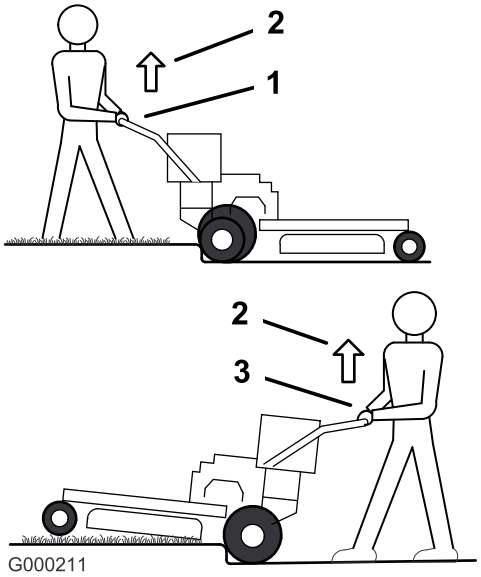

Figure 11

1. Lower control bar engaged and mower in reverse
2. Pull up to assist machine
3. Lower control bar engaged and mower going forward

Driving Backward up a Curb

1. Disengage the mower blades.
2. Select reverse to drive the machine.
3. Drive the machine until drive wheels contact curb (Figure 11).

   Note: Both drive wheels should contact the curb and caster wheels straight.

4. At the same time engage lower control bar and lift up on the lower handle (Figure 10 and Figure 12).

   Note: Lifting up on the lower handle will assist driving the machine up a curb and not spin the drive wheels.

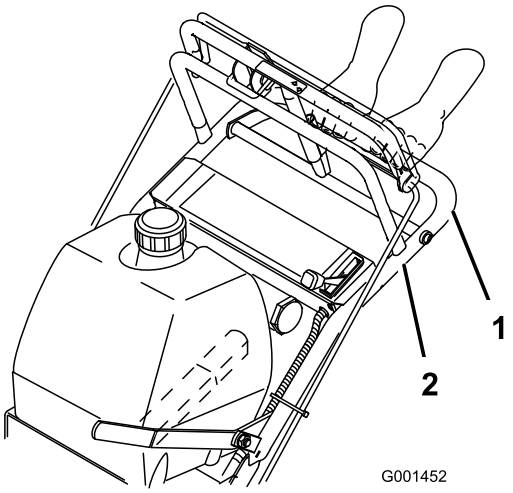

Figure 12

1. Lower control bar (engaged)
2. Handle

Stopping the Machine

To stop the machine, pull back on the upper control bar, release the blade-control bail, turn the ignition key to the off position, and set the parking brake; refer to Operating the Parking Brake (page 15). Remember to remove the key from the ignition switch.

⚠ CAUTION

Children or bystanders may be injured if they move or attempt to operate the machine while it is unattended.

Always remove the ignition key and set the parking brake when leaving the machine unattended, even if just for a few minutes.

Transporting the Machine

Use a heavy-duty trailer or truck to transport the machine. Ensure that the trailer or truck has all necessary lighting and marking as required by law. Please carefully read all the safety instructions. Knowing this information could help you, your family, pets or bystanders avoid injury.

To transport the machine:

1. Stop the engine, remove the key, set the brake, and close the fuel valve.
2. Securely fasten the machine to the trailer or truck with straps, chains, cable, or ropes.
3. If using a trailer, secure the trailer to the towing vehicle and install the safety chains.

Adjusting the Flow Baffle

You can adjust the mower discharge flow for different types of mowing conditions. Position the baffle to give the best quality of cut.

1. Disengage the PTO, move the motion control levers to the neutral locked position and set the parking brake.
2. Stop the engine, remove the key, and wait for all moving parts to stop before leaving the operating position.
3. Loosen the nut (Figure 13).
4. Adjust the baffle and nut in the slot to the desired discharge flow, and tighten the nut.

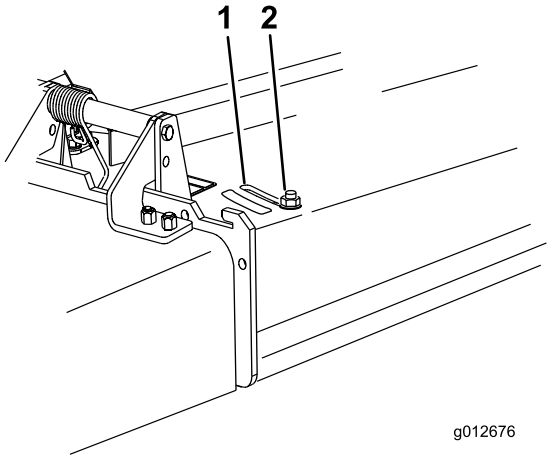

Figure 13

1. Slot
2. Nut

Positioning the Flow Baffle

The following figures are only recommendations for use. Adjustments will vary by grass type, moisture content, and height of grass.

Note: If the engine power draws down and the mower ground speed is the same, open up the baffle.

Position A

This is the full rear position (see Figure 14). The suggested use for this position is a follows:

- Use for short, light grass mowing conditions.
- Use in dry conditions.
- Use to make smaller grass clippings.
- Use to propel the grass clippings farther away from the mower.

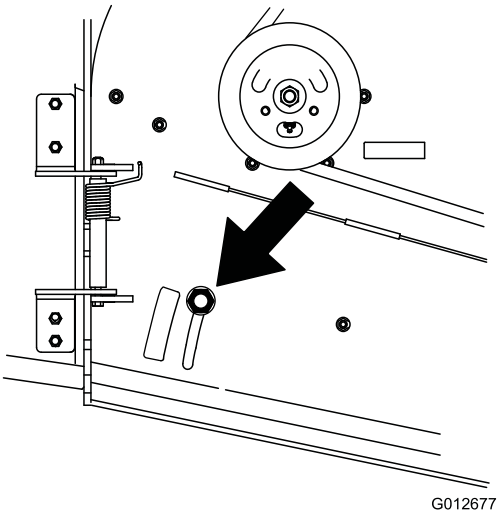

Figure 14

Position B

Use this position when bagging (Figure 15).

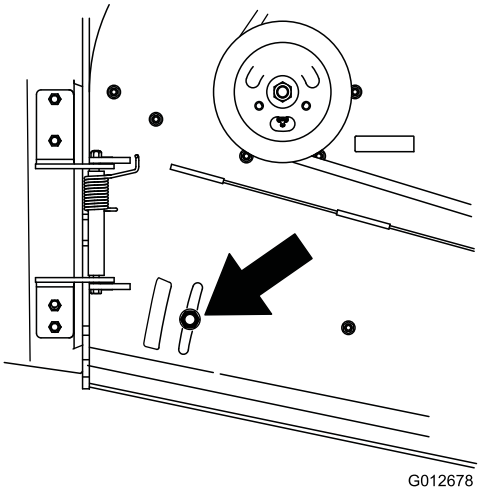

Figure 15

Position C

This is the full open position. The suggested use for this position is as follows (Figure 16):

- Use in tall, dense grass mowing conditions.
- Use in wet conditions.
- Use to lower the engine power consumption.
- Use at increased ground speed in heavy conditions.

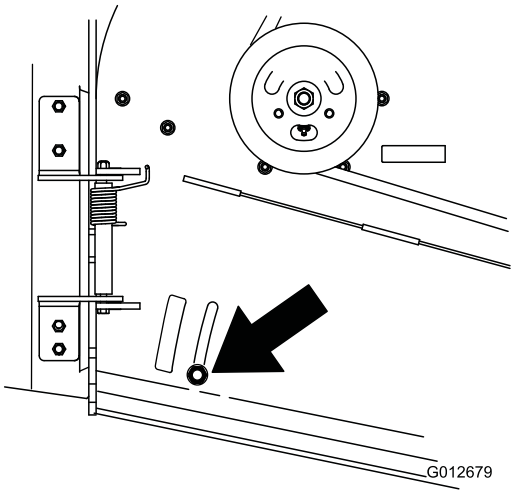

Figure 16

Side Discharging or Mulching the Grass

This mower has a hinged grass deflector that disperses clippings to the side and down toward the turf.

⚠ DANGER

Without the grass deflector, discharge cover, or complete grass catcher assembly mounted in place, you and others are exposed to blade contact and thrown debris. Contact with rotating mower blade(s) and thrown debris will cause injury or death.

- **Never remove the grass deflector from the mower because the grass deflector routes material down toward the turf. If the grass deflector is ever damaged, replace it immediately.**
- **Never put your hands or feet under the mower.**
- **Never try to clear discharge area or mower blades unless you release the bail and the power take off (PTO) is off. Rotate the ignition key to Off. Also remove the key and pull the wires off the spark plug(s).**

Adjusting the Height of Cut

This machine has a 26 to 108 mm (1 to 4-1/4 inch) range for the height of cut. This can be achieved by adjusting the blade spacers, rear axle height, and front caster spacers. Use the Height-of-Cut Chart (page 23) to select the combination of adjustments required.

Adjusting the Blade Height

Adjust the blades by using the 4 spacers (6 mm) (1/4 inch), on the blade spindle bolts. This allows for a 25 mm (1-inch) adjustment range, in 6 mm (1/4 inch) increments, of cutting height in any axle position. Use the same number of blade spacers on all blades to achieve a level cut (2 above and 2 below, 1 above and 3 below, etc.).

1. Disengage the blade control (PTO) lever and set the parking brakes.
2. Stop the engine and wait for all moving parts to stop before leaving the operating position.
3. Hold the blade bolt and remove the nut (Figure 17).

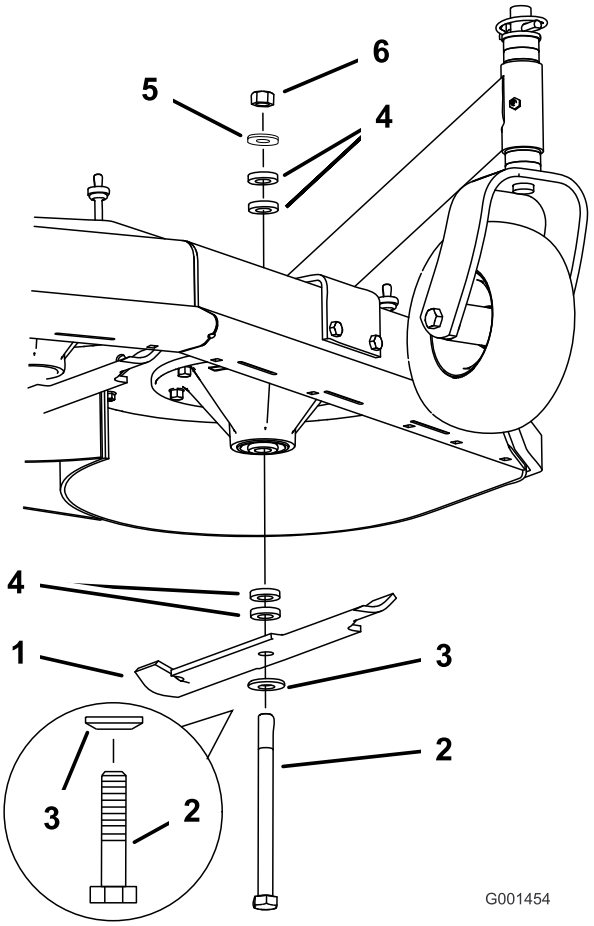

Figure 17

1.	Blade	4.	Spacer
2.	Blade bolt	5.	Thin washer
3.	Curved washer	6.	Nut

4. Slide the bolt down through the spindle, and change the spacers as needed (Figure 17).
5. Install the bolt and curved washer, add extra spacer(s), and secure them with a thin washer and a nut (Figure 17).
6. Torque the blade bolt to 75-80 ft-lb (101-108 N-m).

Adjusting the Axle Height

Adjust the axle position to the selected height-of-cut setting. Refer to the Height-of-Cut Chart.

1. Disengage the blade control (PTO) lever and set the parking brakes.
2. Stop the engine and wait for all moving parts to stop before leaving the operating position.
3. Loosen, but do not remove, the 2 axle pivot bolts and the 2 axle adjustment bolts (Figure 18).

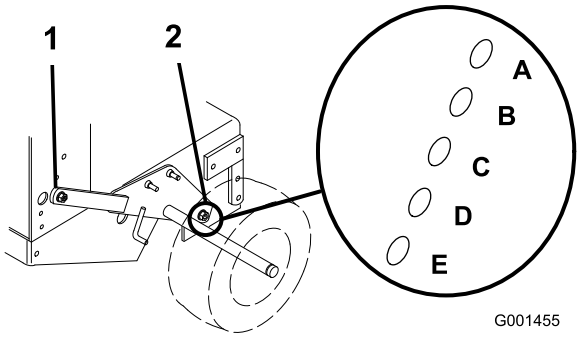

Figure 18

1. Axle pivot bolt
2. Axle adjustment bolt

4. Place a jack under the rear center of the engine frame. Raise the back end of the engine frame up enough to remove the front 2 axle adjustment bolts (Figure 18).

   Note: Use jack stands to support the machine.

5. Raise or lower the engine frame with the jack so that you can install the front 2 axle adjustment bolts in the desired hole location (Figure 18).

   Note: Use a tapered punch to help align the holes.

6. Tighten all 4 bolts and lower the mower.
7. Adjust the control rods and the brake linkages as required. Refer to Adjusting the Control Rods (page 22) and Servicing the Brakes (page 32).

   Important: You must adjust the control rods and the brake linkage when you change the axle positions for proper traction and brake function.

Adjusting the Caster Position

1. Using the Height-of-Cut Chart (page 23), adjust the caster spacers to match with the axle hole selected (Figure 19).

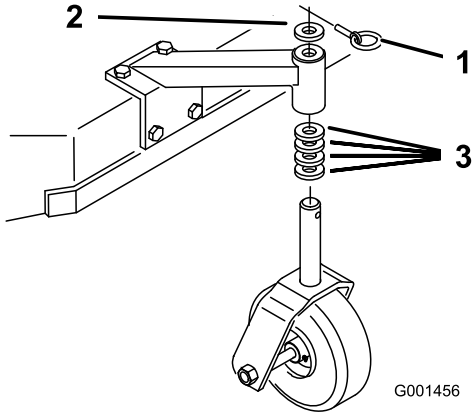

Figure 19

1. Latch pin
2. Spacer, 5 mm (3/16 inch)
3. Spacer, 13 mm (1/2 inch)

2. Remove the latch pin, slide the caster from the support, and change the spacers (Figure 19).
3. Install the caster in the support and insert the latch pin (Figure 19).

Adjusting the Handle Height

You can adjust the handle position to match your height preference.

1. Remove hairpin cotter, washer and clevis pin securing control rod fitting to idler bracket (Figure 20).

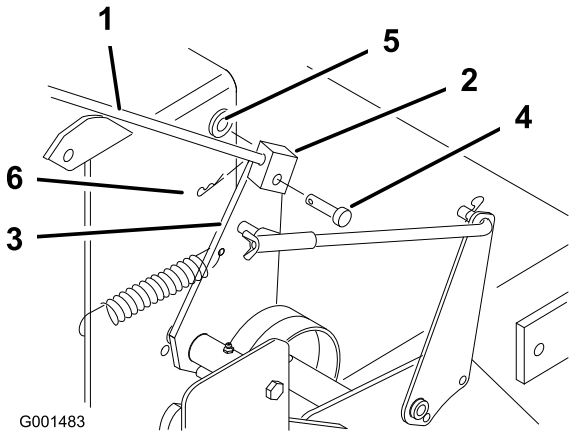

Figure 20

1. Control rod
2. Control rod fitting
3. Idler bracket
4. Clevis pin
5. Washer
6. Hairpin cotter

2. Loosen the upper flange bolts (3/8 x 1 inch) and flange nut securing the handle to the rear frame (Figure 21).

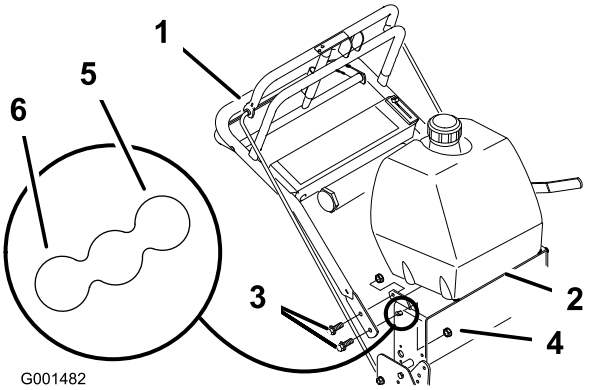

Figure 21

1. Upper handle
2. Rear frame
3. Flange bolt (3/8 x 1 inch)
4. Locknut (3/8 inch)
5. Upper mounting hole
6. Lower mounting hole

3. Remove the lower flange bolts (3/8 x 1 inch) and flange nuts securing handle to rear frame (Figure 21).
4. Pivot handle to desired operating position and install lower flange bolts (3/8 x 1 inch) and flange nuts into mounting holes.

   Note: Tighten all flange bolts.
5. Thread rod fitting up or down on rod until proper position is attained and install into fitting to idler bracket with clevis pin, washer and hairpin cotter.
6. Check the parking brake adjustment. Refer to Checking the Brakes in Brake Maintenance (page 32).

Adjusting the Control Rods

1. Check the gap between the upper control bar and the fixed bar with the wheel drive fully engaged. The gap will need to be approximately 25 to 32 mm (1 to 1-1/4 inches); refer to Figure 22.

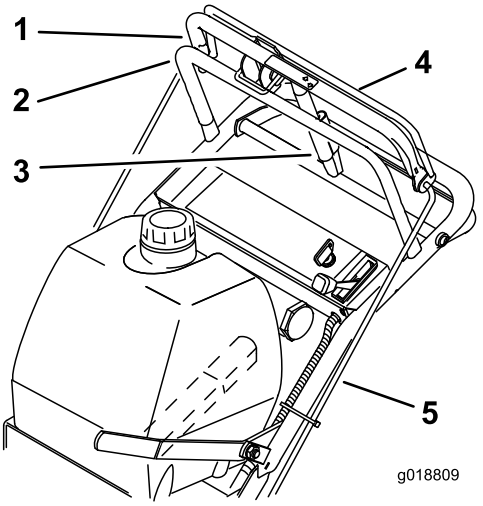

Figure 22

1. 25 to 32 mm (1 to 1-1/4 inches) gap
2. Fixed control bar
3. Parking-brake lever
4. Upper control bar
5. Control rod

Note: The upper control bar and the fixed bar must be parallel in the engaged, relaxed and brake positions.

2. Check the operation. If adjustment is required, remove the hairpin cotter pin securing the rod to the upper control bar. Thread the rod in or out of the control rod fitting for proper position and install the control rod into the upper control bar with the hairpin cotter pin.
3. After adjusting the control rods, check the parking brake adjustment; refer to Servicing the Brake in Brake Maintenance (page 32).

Height-of-Cut Chart

Axle position	Number of spacers below the caster		Number of 1/4 inch blade spacers below the spindle				
	13 mm (1/2 inch)	5 mm (3/16 inch)	4	3	2	1	0
A	0	0	26 mm (1 inch)	32 mm (1-1/4 inch)	38 mm (1-1/2 inch)	45 mm (1-3/4 inch)	51 mm (2 inch)
A	0	1	29 mm (1-1/8 inch)	35 mm (1-3/8 inch)	41 mm (1-5/8 inch)	48 mm (1-7/8 inch)	54 mm (2-1/8 inch)
A	1	0	35 mm (1-3/8 inch)	41 mm (1-5/8 inch)	48 mm (1-7/8 inch)	54 mm (2-1/8 inch)	60 mm (2-3/8 inch)
B	0	1	35 mm (1-3/8 inch)	41 mm (1-5/8 inch)	48 mm (1-7/8 inch)	54 mm (2-1/8 inch)	60 mm (2-3/8 inch)
B	1	0	41 mm (1-5/8 inch)	48 mm (1-7/8 inch)	54 mm (2-1/8 inch)	60 mm (2-3/8 inch)	67 mm (2-5/8 inch)
B	1	1	45 mm (1-3/4 inch)	51 mm (2 inch)	57 mm (2-1/4 inch)	64 mm (2-1/2 inch)	70 mm (2-3/4 inch)
B	2	0	51 mm (2 inch)	57 mm (2-1/4 inch)	64 mm (2-1/2 inch)	70 mm (2-3/4 inch)	76 mm (3 inch)
C	1	1	48 mm (1-7/8 inch)	54 mm (2-1/8 inch)	60 mm (2-3/8 inch)	67 mm (2-5/8 inch)	73 mm (2-7/8 inch)
C	2	0	55 mm (2-1/8 inch)	60 mm (2-3/8 inch)	67 mm (2-5/8 inch)	73 mm (2-7/8 inch)	79 mm (3-1/8 inch)
C	2	1	57 mm (2-1/4 inch)	64 mm (2-1/2 inch)	70 mm (2-3/4 inch)	76 mm (3 inch)	83 mm (3-1/4 inch)
C	3	0	64 mm (2-1/2 inch)	70 mm (2-3/4 inch)	76 mm (3 inch)	83 mm (3-1/4 inch)	89 mm (3-1/2 inch)
D	2	1	61 mm (2-3/8 inch)	67 mm (2-5/8 inch)	73 mm (2-7/8 inch)	79 mm (3-1/8 inch)	86 mm (3-3/8 inch)
D	3	0	64 mm (2-1/2 inch)	70 mm (2-3/4 inch)	76 mm (3 inch)	82 mm (3-1/4 inch)	89 mm (3-1/2 inch)
D	3	1	70 mm (2-3/4 inch)	76 mm (3 inch)	82 mm (3-1/4 inch)	89 mm (3-1/2 inch)	95 mm (3-3/4 inch)
D	4	0	76 mm (3 inch)	82 mm (3-1/4 inch)	89 mm (3-1/2 inch)	95 mm (3-3/4 inch)	102 mm (4 inch)
E	3	1	73 mm (2-7/8 inch)	79 mm (3-1/8 inch)	86 mm (3-3/8 inch)	92 mm (3-5/8 inch)	98 mm (3-7/8 inch)
E	4	0	79 mm (3-1/8 inch)	86 mm (3-3/8 inch)	92 mm (3-5/8 inch)	98 mm (3-7/8 inch)	105 mm (4-1/8 inch)
E	4	1	82 mm (3-1/4 inch)	89 mm (3-1/2 inch)	95 mm (3-3/4 inch)	102 mm (4 inch)	108 mm (4-1/4 inch)

Maintenance

Note: Determine the left and right sides of the machine from the normal operating position.

Recommended Maintenance Schedule(s)

Maintenance Service Interval	Maintenance Procedure
After the first 8 hours	• Change the engine oil. • Check the mower belt tension.
After the first 25 hours	• Check the mower belt tension.
Before each use or daily	• Check the safety system. • Grease the caster wheels and caster pivot. • Check the engine-oil level. • Clean the air-intake screen. • Clean the air intake screen from grass and debris before each use. • Check the brakes. • Inspect the blades. • Clean the mower deck.
Every 25 hours	• Clean the foam air-cleaner element.
Every 50 hours	• Grease the mower-belt idler. • Check the paper air-cleaner element. • Check the tire pressure. • Check the belts. • Check the mower belt tension.
Every 100 hours	• Change the engine oil. • Check the spark plugs. • Check and clean the engine-cooling fins and shrouds.
Every 200 hours	• Replace the paper air-cleaner element. • Change the oil filter. • Replace the fuel filter. • Replace the fuel-vent filter.
Every 250 hours	• Grease the transmission couplers (more often in dirty or dusty conditions).
Every 400 hours	• Grease the wheel bearings (more often in dirty or dusty conditions).
Before storage	• Paint chipped surfaces. • Perform all maintenance procedures listed above before storage.

Important: **Refer to your engine owner's manual for additional maintenance procedures.**

⚠ CAUTION

If you leave the key in the ignition switch, someone could accidently start the engine and seriously injure you or other bystanders.

Remove the key from the ignition and disconnect the spark-plug wire(s) from the spark plug(s) before you do any maintenance. Set the wire aside so that it does not accidentally contact the spark plug.

Lubrication

Grease Type: #2 general-purpose lithium-based or molybdenum-based grease

Lubricating the Machine

1. Disengage the PTO and set the parking brake.
2. Stop the engine, remove the key, and wait for all moving parts to stop before leaving the operating position.
3. Clean the grease fittings with a rag. Make sure to scrape any paint off the front of the fitting(s).
4. Connect a grease gun to the fitting. Pump grease into the fittings until grease begins to ooze out of the bearings.
5. Wipe up any excess grease.

Lubricating the Caster and Wheel Bearings

1. Lubricate the front-wheel bearings and front spindles (Figure 23).
2. Lubricate the drive-wheel bearings (Figure 23).

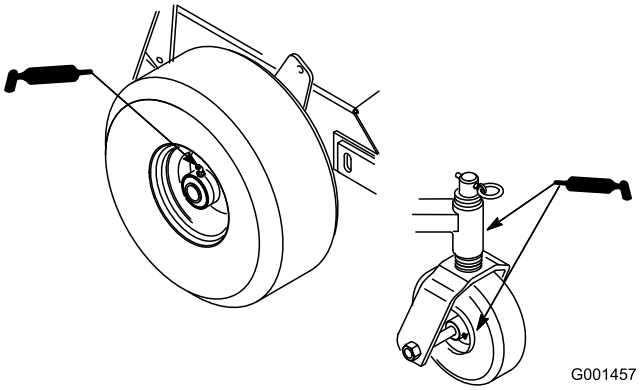

Figure 23

Greasing the Transmission Couplers

Lubricate the transmission couplers and idler arm pivots located in the back of the machine (Figure 24).

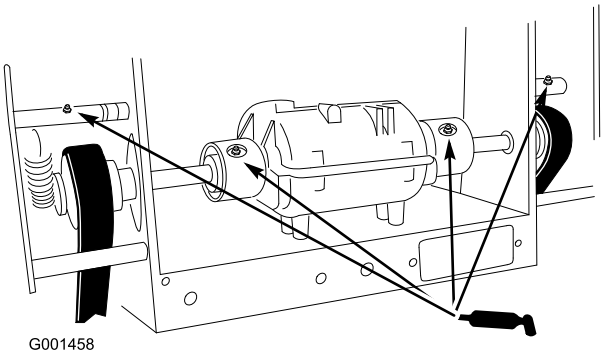

Figure 24

Greasing the Mower Belt Idler

Grease the fitting on the mower belt-idler arm pivot (Figure 25).

Note: Remove the mower-deck cover to access the grease fitting for the mower belt-idler arm.

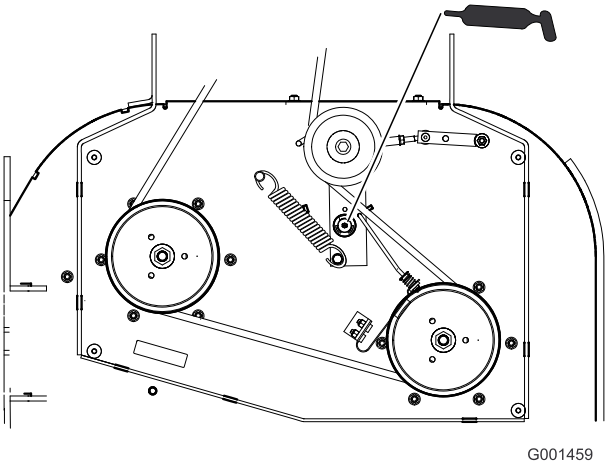

Figure 25
32-inch and 36-inch mower deck

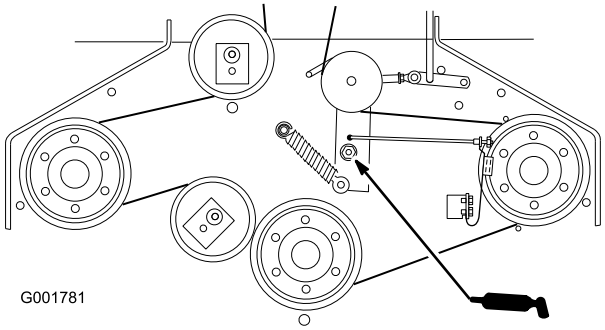

Figure 26
48-inch mower deck

Engine Maintenance

Servicing the Air Cleaner

Service Interval: Every 25 hours—Clean the foam air-cleaner element.

Every 50 hours—Check the paper air-cleaner element.

Every 200 hours—Replace the paper air-cleaner element.

Note: Service the air cleaner more frequently (every few operating hours) if the operating conditions are extremely dusty or sandy.

Important: Do not oil the foam or paper element.

Removing the Foam and Paper Elements

1. Disengage the PTO and set the parking brake.
2. Stop the engine, remove the key, and wait for all moving parts to stop before leaving the operating position.
3. Clean around the air cleaner to prevent dirt from getting into the engine and causing damage (Figure 27).
4. Unscrew the cover knobs and remove the air-cleaner cover (Figure 27).
5. Unscrew the hose clamp and remove the air cleaner assembly (Figure 27).
6. Carefully pull the foam element off the paper element (Figure 27).

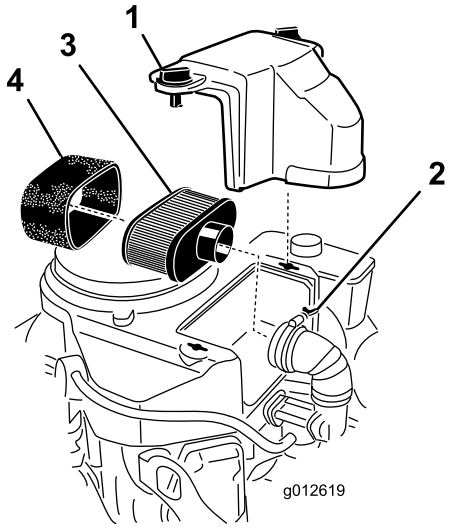

Figure 27

1. Cover
2. Hose clamp
3. Paper element
4. Foam element

Cleaning the Foam Air-Cleaner Element

1. Wash the foam element in liquid soap and warm water. When the element is clean, rinse it thoroughly.
2. Dry the element by squeezing it in a clean cloth.

Important: Replace the foam element if it is torn or worn.

Servicing the Paper Air-Cleaner Element

1. Do not clean the paper filter, replace it (Figure 27).
2. Inspect the element for tears, an oily film, or damage to the rubber seal.
3. Replace the paper element if it is damaged.

Installing the Foam and Paper Elements

Important: To prevent engine damage, always operate the engine with the complete foam and paper air cleaner assembly installed.

1. Carefully slide the foam element onto the paper air-cleaner element (Figure 27).
2. Place the air cleaner assembly onto the air cleaner base and secure it with the 2 wing nuts (Figure 27).
3. Place the air-cleaner cover into position and tighten the cover knob (Figure 27).

Servicing the Engine Oil

Service Interval: Before each use or daily—Check the engine-oil level.

After the first 8 hours—Change the engine oil.

Every 100 hours—Change the engine oil.

Every 200 hours—Change the oil filter.

Note: Change the oil more frequently when the operating conditions are extremely dusty or sandy.

Oil Type: Detergent oil (API service SF, SG, SH, SJ or SL)

Crankcase Capacity: 1.7 L (1.8 US qt) with the filter removed; 1.5 L (1.6 US qt) without the filter removed

Viscosity: Refer to the table (Figure 28).

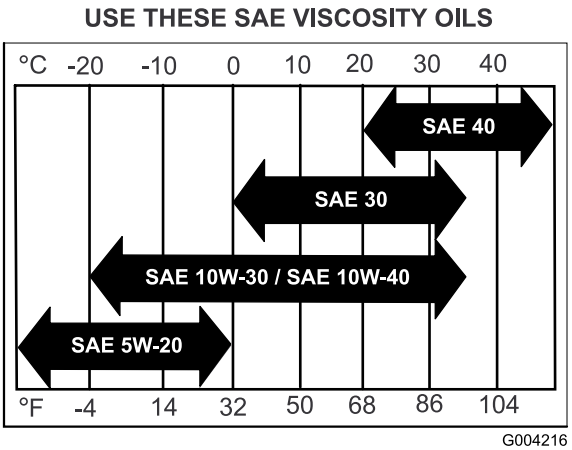

Figure 28

Checking the Engine-Oil Level

1. Park the machine on a level surface.
2. Disengage the PTO and set the parking brake.
3. Stop the engine, remove the key, and wait for all moving parts to stop before leaving the operating position.
4. Clean around the oil dipstick (Figure 29) so that dirt cannot fall into the filler hole and damage the engine.

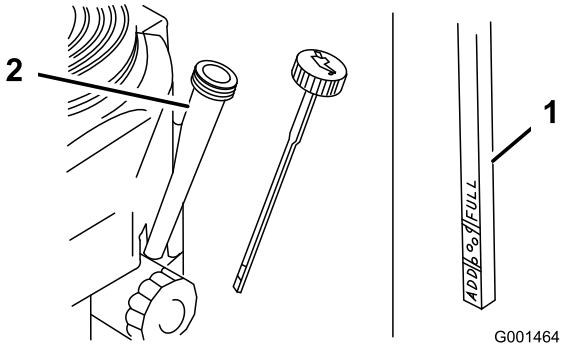

Figure 29

1. Oil dipstick
2. Filler tube

5. Unscrew the oil dipstick and wipe the end clean (Figure 29).
6. Slide the oil dipstick fully into the filler tube, but do not thread it onto the tube (Figure 29).
7. Pull the dipstick out and look at the end. If the oil level is low, slowly pour only enough oil into the filler tube to raise the level to the Full mark.

   Important: Do not overfill the crankcase with oil and run the engine; engine damage can result.

Changing the Engine Oil

1. Park the machine so that the drain side is slightly lower than the opposite side to ensure that the oil drains completely.
2. Disengage the PTO and set the parking brake.
3. Stop the engine, remove the key, and wait for all moving parts to stop before leaving the operating position.
4. Slide the drain hose over the oil drain valve.
5. Place a pan below the drain hose.

   Note: Rotate oil drain valve to allow oil to drain (Figure 30).
6. When oil has drained completely, close the drain valve.
7. Remove the drain hose (Figure 30).

   Note: Dispose of the used oil at a recycling center.

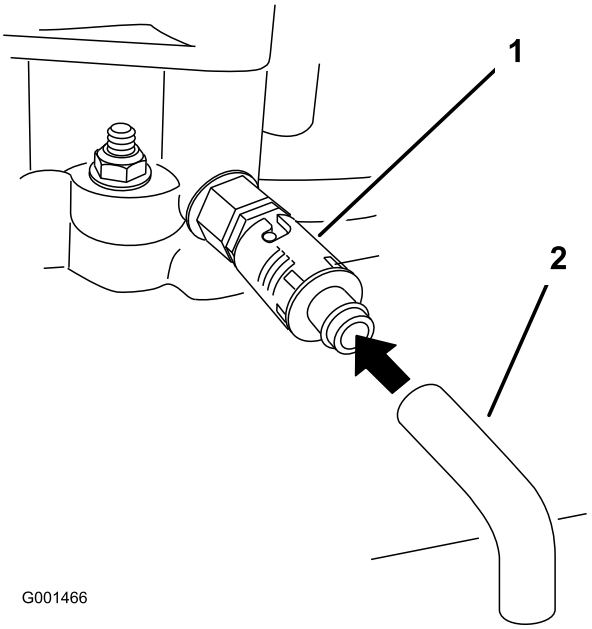

Figure 30

1. Oil drain valve
2. Oil drain hose

8. Slowly pour approximately 80% of the specified oil into the filler tube (Figure 29).
9. Check the oil level; refer to Checking the Engine-Oil Level (page 27).
10. Slowly add the additional oil to bring it to the **Full** mark.

Changing the Oil Filter

Note: Change the oil filter more frequently when the operating conditions are extremely dusty or sandy.

1. Drain the oil from the engine; refer to Changing the Engine Oil (page 27).
2. Remove the old filter (Figure 31).

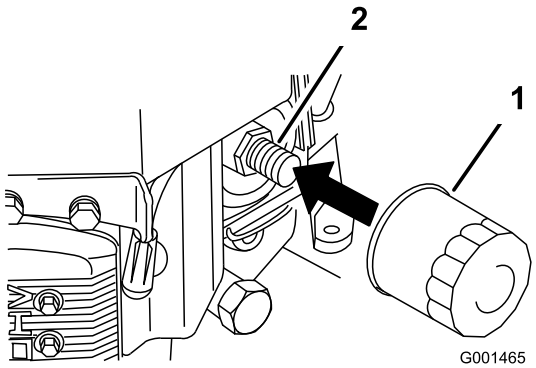

Figure 31

1. Oil filter
2. Adapter

3. Apply a thin coat of new oil to the rubber gasket on the replacement filter (Figure 31).
4. Install the replacement oil filter to the filter adapter, turn the oil filter clockwise until the rubber gasket contacts the filter adapter, then tighten the filter an additional 3/4 turn (Figure 31).
5. Fill the crankcase with the proper type of new oil; refer to Servicing the Engine Oil (page 26).
6. Run the engine for about 3 minutes, stop the engine, and check for oil leaks around the oil filter and drain valve.
7. Check the engine oil level and add oil if needed.
8. Wipe up any spilled oil.

Servicing the Spark Plugs

Service Interval: Every 100 hours—Check the spark plugs.

Ensure that the air gap between the center electrode and the side electrode is correct before installing each spark plug. Use a spark-plug wrench for removing and installing the spark plugs and a gapping tool or a feeler gauge to check and adjust the air gap. Install new spark plugs if necessary.

Type: Champion® RCJ8Y or equivalent

Air Gap: 0.75 mm (0.030 inch)

Removing the Spark Plugs

1. Disengage the PTO and set the parking brake.
2. Stop the engine, remove the key, and wait for all moving parts to stop before leaving the operating position.
3. Disconnect the wires from the spark plugs (Figure 32).

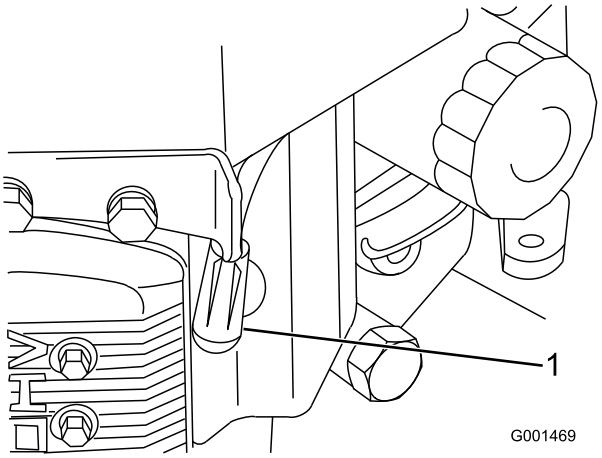

Figure 32

1. Spark-plug wire/spark plug

4. Clean around the spark plugs to prevent dirt from falling into the engine and potentially causing damage.
5. Remove the spark plugs and the metal washers.

Checking the Spark Plugs

1. Look at the center of the spark plugs (Figure 33).

   Note: If you see light brown or gray on the insulator, the engine is operating properly. A black coating on the insulator usually means that the air cleaner is dirty.

2. If needed, clean the spark plug with a wire brush to remove carbon deposits.

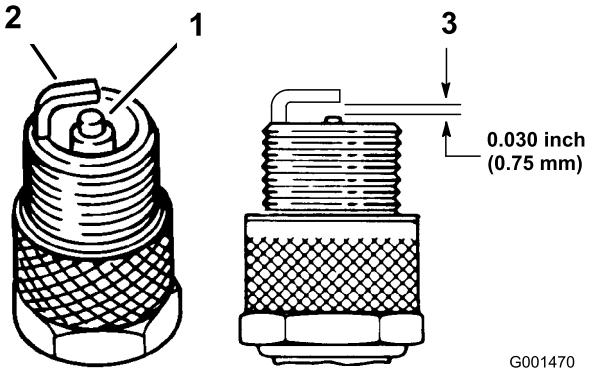

Figure 33

1. Center electrode; insulator
2. Side electrode
3. Air gap (not to scale)

Important: Always replace the spark plugs when they have worn electrodes, an oily film, or a cracked insulator.

3. Check the gap between the center electrode and the side electrode (Figure 33).

   Note: Bend the side electrode (Figure 33) if the gap is not correct.

Installing the Spark Plugs

1. Install the spark plugs and the metal washer. Ensure that the air gap is set correctly.
2. Tighten the spark plugs to 22 N-m (16 ft-lb).
3. Connect the wires to the spark plugs (Figure 33).

Fuel System Maintenance

Servicing the Fuel System

⚠ DANGER

In certain conditions, gasoline is extremely flammable and highly explosive. A fire or explosion from gasoline can burn you and others and can damage property.

- **Drain gasoline from the fuel tank when the engine is cold. Do this outdoors in an open area. Wipe up any gasoline that spills.**
- **Never smoke when draining gasoline, and stay away from an open flame or where a spark may ignite the gasoline fumes.**

Draining the Fuel Tank

1. Park the machine on a level surface to ensure that the fuel tank drains completely; then disengage the power take-off (PTO), set the parking brake, and turn the ignition key to the Off position. Remove the key.
2. Close the fuel-shutoff valve at the fuel tank (Figure 34).
3. Squeeze the ends of the hose clamp together and slide it up the fuel line away from fuel filter (Figure 34).
4. Pull the fuel line off the fuel filter (Figure 34).
5. Open the fuel-shutoff valve and allow the gasoline to drain into a gas can or drain pan.

   Note: Now is the best time to install a new fuel filter because the fuel tank is empty. Refer to Replacing the Fuel Filter (page 30).
6. Install the fuel line onto the fuel filter. Slide the hose clamp close to the valve to secure the fuel line.

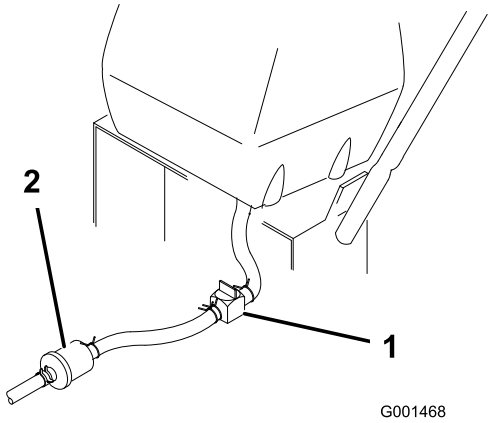

Figure 34

1. Fuel-shutoff valve
2. Clamp

Replacing the Fuel Filter

Service Interval: Every 200 hours/Yearly (whichever comes first)

Never install a dirty filter if it is removed from the fuel line.

Note: Note how the fuel filter is installed in order to install the new filter correctly.

Note: Wipe up any spilled fuel.

1. Disengage the PTO and set the parking brake.
2. Stop the engine, remove the key, and wait for all moving parts to stop before leaving the operating position.
3. Close the fuel-shutoff valve at the fuel tank (Figure 34).
4. Squeeze the ends of the hose clamps together and slide them away from the filter (Figure 35).

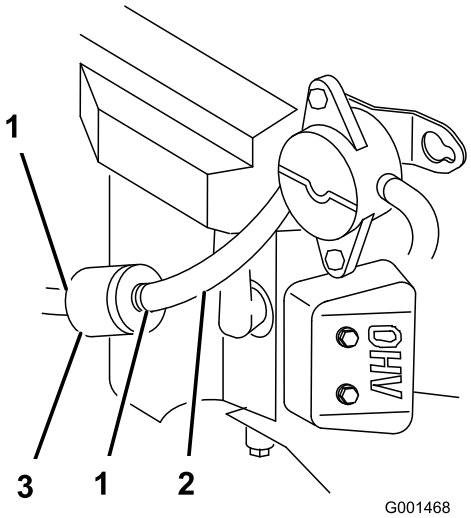

Figure 35

1. Hose clamp
2. Fuel line
3. Filter

5. Remove the filter from the fuel lines.
6. Install a new filter and move the hose clamps close to the filter.
7. Open the fuel-shutoff valve at the fuel tank (Figure 34).
8. Check for fuel leaks, and repair if needed.
9. Wipe up any fuel that spilled.

Servicing the Fuel-Vent System

Service Interval: Every 200 hours/Yearly (whichever comes first)

1. Disengage the PTO and set the parking brake.
2. Stop the engine, remove the key, and wait for all moving parts to stop before leaving the operating position.
3. Remove the existing fuel-vent filter (Figure 36).
4. Install a new filter.

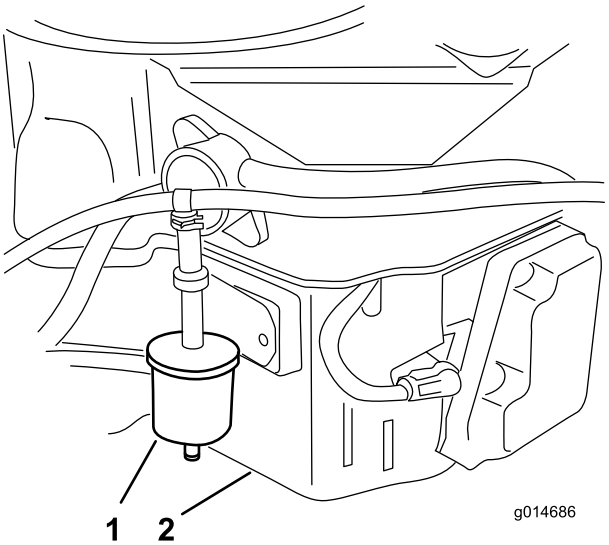

Figure 36

1. Fuel-vent filter
2. Right side of engine

Drive System Maintenance

Checking the Tire Pressure

Service Interval: Every 50 hours/Monthly (whichever comes first)

Maintain the air pressure in the rear tires at 83 to 97 kPa (12 to 14 psi). Uneven tire pressure can cause an uneven cut.

Note: The front tires are semi-pneumatic tires and do not require air pressure maintenance.

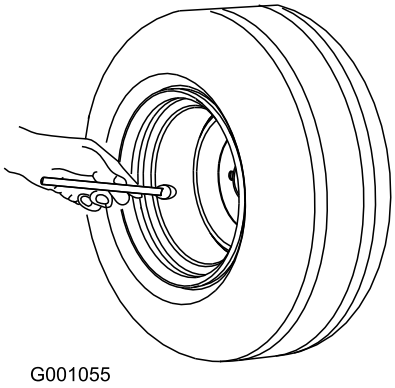

Figure 37

Cooling System Maintenance

Cleaning the Air-Intake Screen

Before each use, remove any buildup of grass, dirt, or other debris from the cylinder and cylinder-head cooling fins, the air-intake screen on the flywheel end, and the carburetor-governor levers and linkage. This will help ensure adequate cooling and correct engine speed and will reduce the possibility of overheating and mechanical damage to the engine.

Cleaning the Cooling System

Service Interval: Before each use or daily

Every 100 hours/Yearly (whichever comes first)

1. Disengage the PTO and set the parking brake.
2. Stop the engine, remove the key, and wait for all moving parts to stop before leaving the operating position.
3. Remove the air-intake screen, the recoil starter, and the fan housing (Figure 38).
4. Clean the debris and grass from the engine parts.
5. Install the air-intake screen, the recoil starter, and the fan housing (Figure 38).

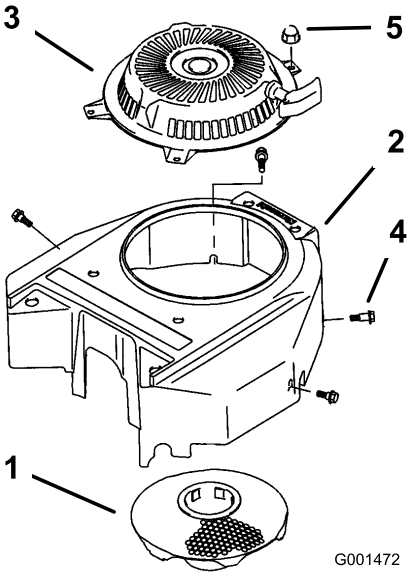

Figure 38

1. Air-intake screen
2. Fan housing
3. Recoil starter
4. Bolt
5. Nut

Brake Maintenance

Servicing the Brakes

Before each use, check brakes on both a level surface and slope.

Always set the parking brake when you stop the machine or leave it unattended. If the parking brake does not hold securely, adjust it.

Checking the Brakes

1. Park the machine on a level surface, disengage the blade control (PTO).
2. Stop the engine, remove the key, and wait for all moving parts to stop before leaving the operating position.
3. Apply the parking brake.

   Note: The wheels must lock when you try to push the machine forward.
4. If the wheels do not lock, adjust the brakes. Refer to Adjusting the Brakes (page 32).
5. Release the brake and press upper control bar very lightly, approximately 13 mm (1/2 inch).

   Note: The wheels should rotate freely; if not, refer to Adjusting the Brakes (page 32).

Adjusting the Brakes

The brake lever is on the upper control bar. If the parking brake does not hold securely, an adjustment is required.

1. Park the machine on a level surface, disengage the PTO, and set the parking brake.
2. Stop the engine, remove the key, and wait for all moving parts to stop before leaving the operating position.
3. Check the brake before you adjust it; refer to Checking the Brakes (page 32).
4. Release the parking brake; refer to Releasing the Parking Brake (page 15).
5. To adjust the brake, rotate the wing nuts on the brake rods (Figure 39). Turn the wing nuts clockwise to tighten the brake and counterclockwise to loosen the brake.

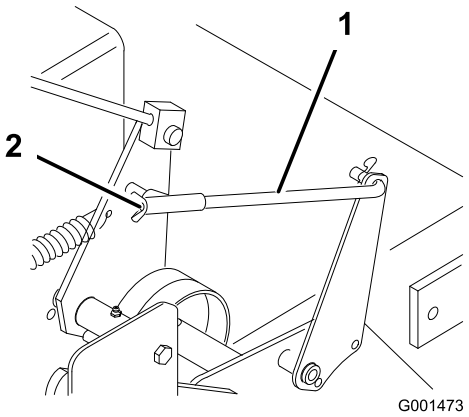

Figure 39

1. Brake rod
2. Wing nut

Note: Control bar should be parallel with the reference bar when properly adjusted.

6. Check the brake operation again; refer to Checking the Brakes (page 32).

Important: With the parking brake released, the rear wheels must rotate freely when you push the mower. If brake action and free wheel rotation cannot be achieved contact your service dealer immediately.

Belt Maintenance

Checking the Belts

Service Interval: Every 50 hours/Monthly (whichever comes first)—Check the belts.

Check the belts for cracks, frayed edges, burn marks, wear, signs of overheating, or any other damage. Replace any damaged belts.

Replacing the Traction Drive Belt

1. Remove the hairpin cotter securing the brake rod to the brake arm to relax the tension on the belt idler (Figure 40).
2. Remove the bottom bolt and loosen the top bolt of the shield to rotate it for belt clearance (Figure 40).
3. Lift the belt past the idler and off the drive pulley (Figure 40).
4. Raise the wheel off the ground enough to remove the belt.
5. Replace the traction-drive belt.
6. Secure the shield with the previously removed bolt and tighten the bolts (Figure 40).
7. Secure the brake rod to the brake arm with the hairpin cotter (Figure 40).

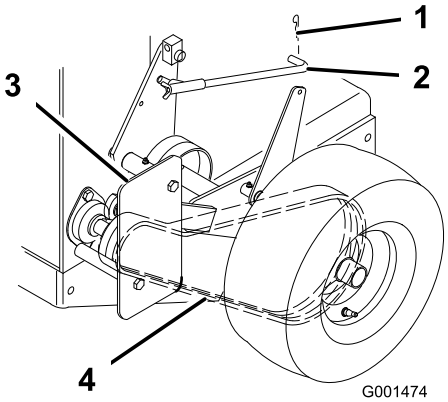

Figure 40

1. Hairpin cotter	3. Shield
2. Brake rod	4. Drive belt

Replacing the Drive Belt

1. Disengage the blade-control (PTO) lever and set the parking brakes.
2. Stop the engine and wait for all moving parts to stop before leaving the operating position.
3. Raise the rear of the machine and hold it up with jack stands.
4. Remove the mower belt (Figure 41).

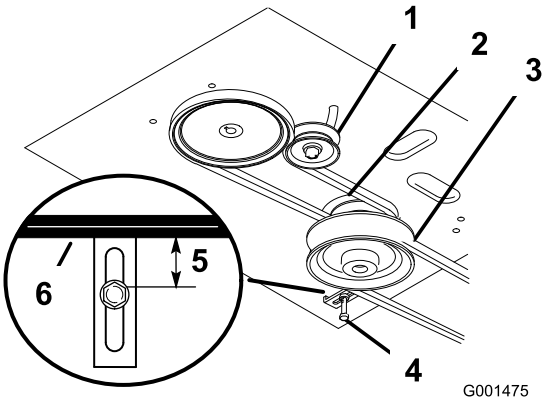

Figure 41

1. Idler pulley in slot	4. Belt guide
2. Traction belt	5. 19 mm (3/4 inch)
3. Mower belt	6. Mower belt

5. Loosen the pivot bolt enough to slide the idler pulley in the slot, and remove the traction belt from the engine and the drive pulleys (Figure 41).
6. Install the new drive belt around the engine and the drive pulleys (Figure 41).
7. Slide the idler pulley in the engine frame to tension the traction belt (Figure 41).
8. Install the mower belt (Figure 41).
9. Check the belt guide under the engine frame for the proper adjustment (Figure 41).

   Note: The distance between the belt guide and mower belt should be 19 mm (3/4 inch) when you engage the mower belt. Adjust the belt if necessary. The disengaged belt should not drag or fall off the pulley when the guides are properly adjusted.

Replacing the Mower Belt

Important: The brake needs to be adjusted when the belt tension or the brake linkage is adjusted.

1. Disengage the blade-control (PTO) lever and set the parking brakes.
2. Stop the engine and wait for all moving parts to stop before leaving the operating position.
3. Remove the knobs and the belt cover on the mower.
4. Remove the idler pulley and the worn belt.
5. Install the new mower belt.
6. Install the idler pulley.
7. Engage the blade-control (PTO) lever and check the belt tension. Refer to Adjusting the Mower Belt Tension (page 35).

Note: The proper mower belt tension is 44 to 67 N-m (10 to 15 ft-lb) with the belt deflected 13 mm (1/2 inch) halfway between the pulleys (Figure 45 or Figure 46).

8. Engage the blade-control (PTO) lever.
9. Check the clearance between the bell crank and the transmission output shaft (Figure 42).

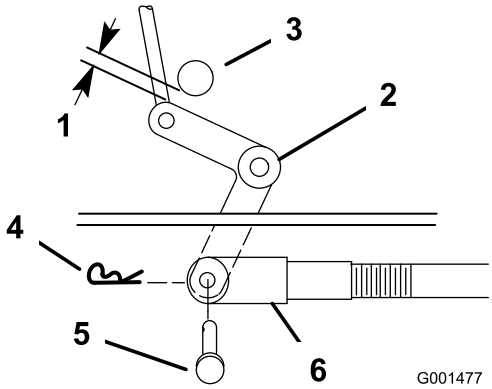

Figure 42

1. 2 to 3 mm (1/16 to 1/8 inch)
2. Bell crank
3. Transmission output shaft
4. Hairpin cotter
5. Clevis pin
6. Clevis

Note: The clearance should be 2 to 3 mm (1/16 to 1/8 inch).

10. Remove the hairpin cotter pin and the clevis pin from the bell crank.
11. Rotate the clevis clockwise on the rod to increase the clearance; rotate it counterclockwise to decrease it (Figure 42).
12. Disengage the blade-control (PTO) lever.

Note: If the assist arm does not contact the front stop on the mower deck (Figure 43 or Figure 44), adjust the clevis to bring the bell crank closer to the transmission output shaft (Figure 42).

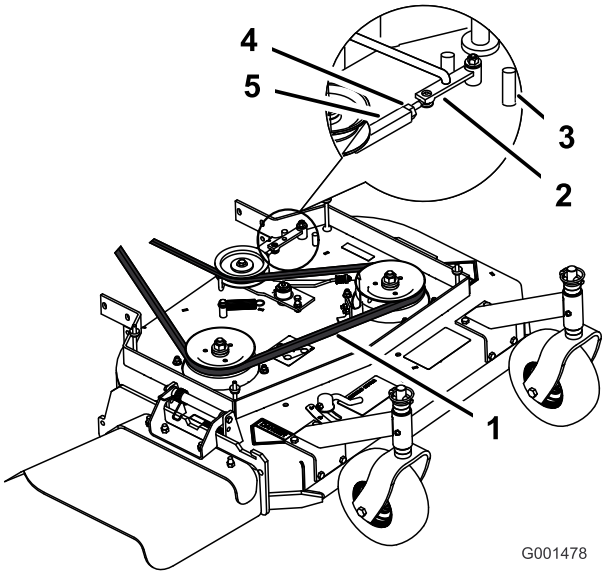

Figure 43

32-inch and 36-inch mower deck

1. 13 mm (1/2 inch) deflection here
2. Assist arm
3. Front stop
4. Locknut
5. Turnbuckle

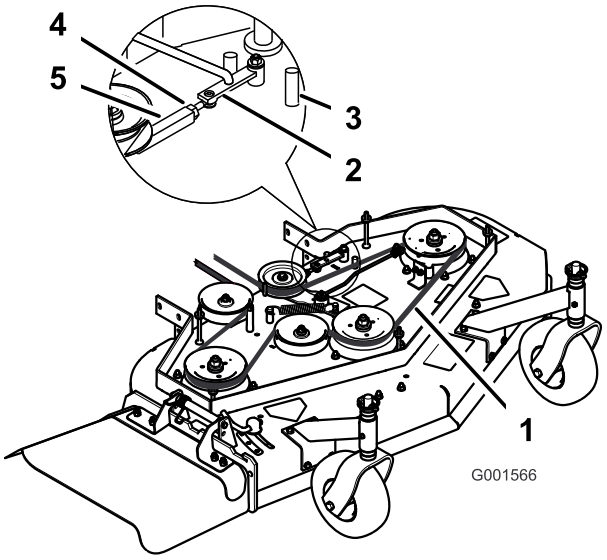

Figure 44

48-inch mower deck

1. 13 mm (1/2 inch) deflection here
2. Assist arm
3. Front stop
4. Locknut
5. Turnbuckle

13. Check the belt guide under the engine frame for the proper adjustment (Figure 41).

Note: The distance between the belt guide and the mower belt should be 32 mm (1-1/4 inch) when you engage the mower belt. Adjust the mower belt as

necessary. The disengaged belt should not drag or fall off the pulley when the guides are properly adjusted.

Adjusting the Mower Belt Tension

Adjusting the Tension for 32in and 36in Mower Decks

Service Interval: After the first 8 hours—Check the mower belt tension.

After the first 25 hours—Check the mower belt tension.

Every 50 hours—Check the mower belt tension.

Important: Adjust the brake when you adjust the belt tension or the brake linkage.

Important: The belt must be tight enough to not slip during heavy loads while cutting grass. Over tensioning the belt will reduce the life of the spindle bearing, the belt, and the idler pulley.

1. Disengage the blade control (PTO) lever and set the parking brakes.
2. Stop the engine and wait for all moving parts to stop before leaving the operating position.
3. Loosen the locknut on the turnbuckle (Figure 45).
4. Rotate the turnbuckle toward the rear of the mower to increase the tension on the belt. Rotate the turnbuckle toward the front of the mower to decrease the tension on the belt (Figure 45).

   Note: The eyebolt threads on both ends of the turnbuckle should be engaged a minimum of 8 mm (5/16 inch).
5. Engage the bladed control lever (PTO) and check the belt tension. Adjust tension until it is correct.

   Note: The proper mower belt tension is 44-67 N-m (10-15 ft-lb) with the belt deflected 13 mm (1/2 inch) halfway between the pulleys (Figure 45).

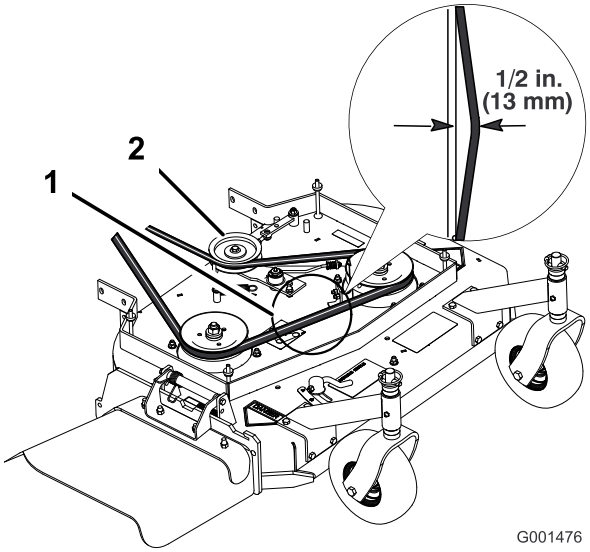

Figure 45
32in and 36in Mower Deck

1. Mower belt with 13 mm (1/2 inch) deflection
2. Idler pulley

6. Tighten the locknut on the turnbuckle.
7. Check the blade-brake adjustment; refer to Adjusting the Blade Brake (page 41).

Adjusting the Tension for 48-inch Mower Decks

Important: Adjust the brake when you adjust the belt tension or the brake linkage.

Important: The belt must be tight enough to not slip during heavy loads while cutting grass. Over-tensioning the belt will reduce the life of the spindle bearing, the belt, and the idler pulley.

1. Disengage the blade-control (PTO) lever and set the parking brakes.
2. Stop the engine and wait for all moving parts to stop before leaving the operating position.
3. Loosen the locknut on the turnbuckle (Figure 47).
4. Rotate the turnbuckle toward the rear of the mower to increase the tension on the belt. Rotate the turnbuckle toward the front of the mower to decrease the tension on the belt (Figure 47).

   Note: The proper mower belt tension is 44 to 67 N-m (10 to 15 ft-lb) with the belt deflected 13 mm (1/2 inch) halfway between the pulleys (Figure 46).

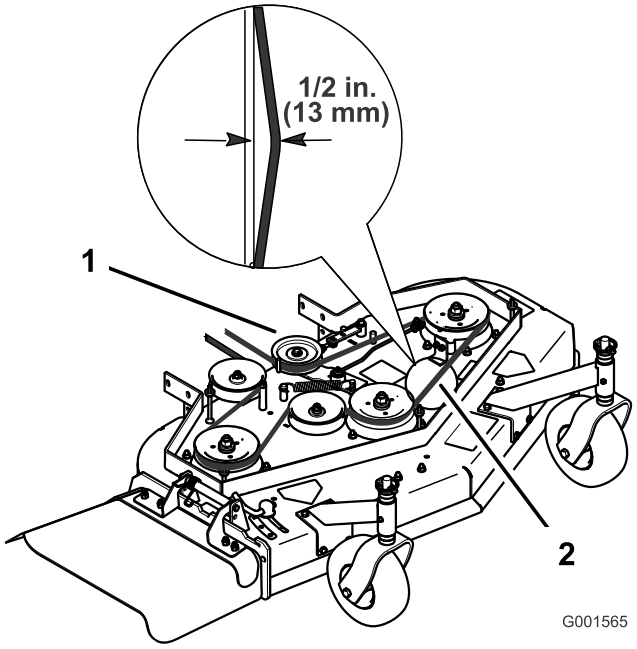

Figure 46
48-inch mower deck

1. Idler pulley
2. Mower belt with 13 mm (1/2 inch) deflection

Note: The eyebolt threads on both ends of the turnbuckle should be engaged a minimum of 8 mm (5/16 inch).

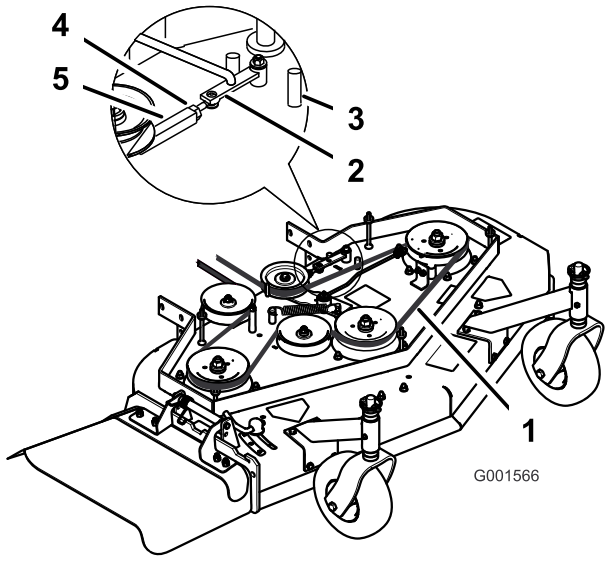

Figure 47

1. 13 mm (1/2 inch) deflection here
2. Assist arm
3. Front stop
4. Locknut
5. Turnbuckle

5. Engage the blade-control lever (PTO) and check the belt tension.
6. If there is no adjustment left in the turnbuckle and the belt is still loose, the rear idler pulley needs to be positioned to the middle or front hole (Figure 48). Use the hole that will give the correct adjustment.
7. When you move the idler pulley, you must move the belt guide. Move the belt guide to the front position (Figure 48).

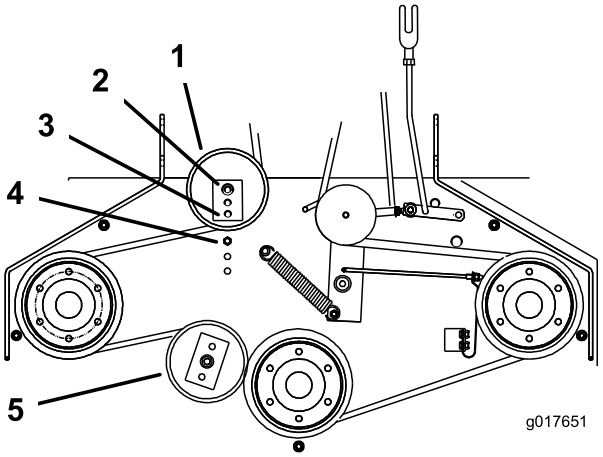

Figure 48

1. Rear idler pulley
2. Middle hole
3. Front hole
4. Belt guide in back position
5. Front idler pulley

8. Check the belt guide under the engine frame for proper adjustment (Figure 49).

Note: The distance between the belt guide and the mower belt should be 19 mm (3/4 inch) when you engage the mower belt (Figure 49). Adjust the mower belt as necessary. The disengaged belt should not drag or fall off the pulley when the guides and belt tension are properly adjusted.

9. Check the blade-brake adjustment; refer to Adjusting the Blade Brake (page 41).

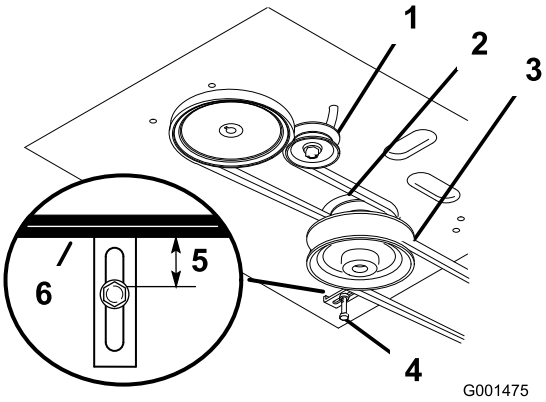

Figure 49

1. Idler pulley in slot
2. Traction belt
3. Mower belt
4. Belt guide
5. 19 mm (3/4 inch)
6. Mower belt

Adjusting the PTO Engagement Linkage

The PTO engagement linkage adjustment is located beneath the front left-hand corner of the engine deck.

1. Disengage the blade-control (PTO) lever and set the parking brakes.
2. Stop the engine and wait for all moving parts to stop before leaving the operating position.
3. Engage the blade-control lever (PTO).
4. Adjust the linkage length to where the lower end of the bellcrank just clears the axle support gusset (Figure 50).

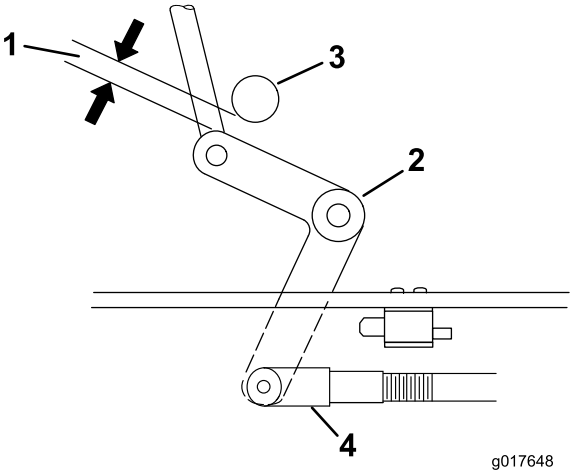

Figure 50

1. Bellcrank
2. Safety switch located under engine deck
3. Bellcrank just clears the gusset with the PTO engaged
4. Yoke
5. Nut
6. Assist arm link

5. Make sure that the assist arm is against the rear-assist-arm stop on the deck (Figure 51).
6. Push the blade-control lever (PTO) down to the disengaged position.
7. The assist arm should contact the front-assist-arm stop on the deck. If it does not contact, adjust the bellcrank so that it is closer to the gusset (Figure 51).

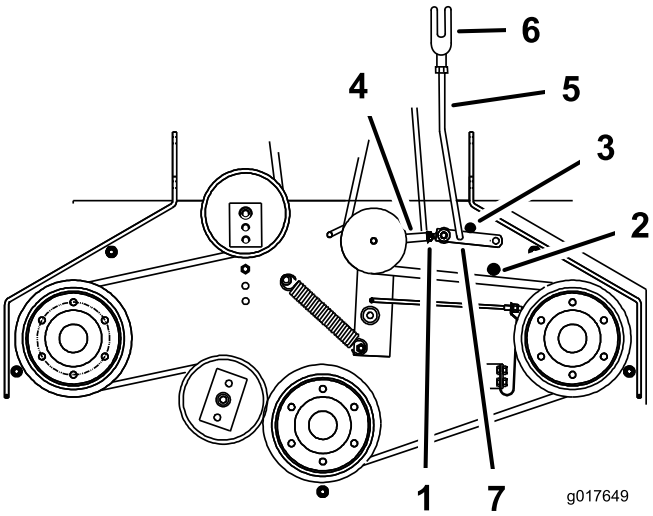

Figure 51

1. Yoke
2. Nut
3. Rear assist arm stop
4. Front assist arm stop
5. Assist arm link
6. Assist arm
7. Turnbuckle

8. To adjust the assist arm link, remove the hairpin cotter pin from the assist arm (Figure 51).
9. Loosen the nut against the yoke (Figure 50).
10. Remove the assist arm link from the assist arm and rotate the link to adjust the length.
11. Install the assist arm link into the assist arm and secure it with the hairpin cotter pin (Figure 51).
12. Check if the assist arm hits against the stops correctly.

Adjusting the PTO Safety Switch

1. Disengage the blade-control (PTO) lever and set the parking brakes.
2. Stop the engine and wait for all moving parts to stop before leaving the operating position.
3. Disengage the blade-control lever (PTO). Make sure that the assist arm is against the front-assist-arm stop.
4. If needed, adjust the blade-safety switch by loosening the bolts holding the switch bracket (Figure 52).
5. Move the mounting bracket until the bellcrank presses the plunger by 6 mm (1/4 inch); refer to (Figure 52).

   Note: Make sure that the bellcrank **does not** touch the switch body; otherwise, damage to the switch could occur.

6. Tighten the switch mounting bracket.

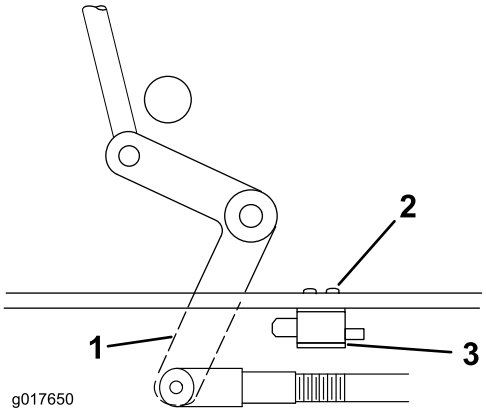

Figure 52

1. Bellcrank
2. Bolts and nuts
3. Switch mounting bracket
4. Switch body

Mower Deck Maintenance

Servicing the Cutting Blades

To ensure a superior quality of cut, keep the blades sharp. For convenient sharpening and replacement, you may want to keep extra blades on hand.

⚠ WARNING

A worn or damaged blade can break, and a piece of the blade could be thrown into the operator's or bystander's area, resulting in serious personal injury or death.

- **Inspect the blade periodically for wear or damage.**
- **Replace a worn or damaged blade.**

Preparing to Inspect or Service the Blades

1. Park the machine on a level surface, disengage the blade-control bail, and set the parking brake.
2. Turn the ignition key to the Off position.
3. Remove the key and disconnect the spark-plug wires from the spark plugs.

Inspecting the Blades

Service Interval: Before each use or daily

1. Inspect the cutting edges (Figure 53). If the edges are not sharp or have nicks, remove and sharpen the blades. Refer to Sharpening the Blades (page 40).

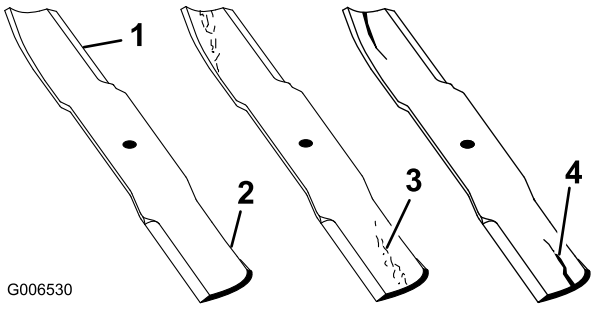

Figure 53

1. Cutting Edge
2. Sail
3. Wear/slot forming in curved area
4. Crack in the curved area

2. Inspect the blades, especially the curved area (Figure 53). If you notice any damage, wear, or a slot forming in this area (item 3. in Figure 53), immediately install a new blade.

Checking for Bent Blades

1. Disengage the blade-control switch (PTO) and set the parking brake.
2. Stop the engine, remove the key, and wait for all moving parts to stop before leaving the operating position.
3. Rotate the blades until the ends face forward and backward (Figure 54).

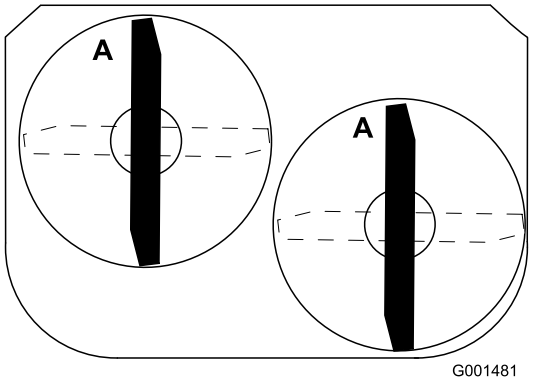

Figure 54

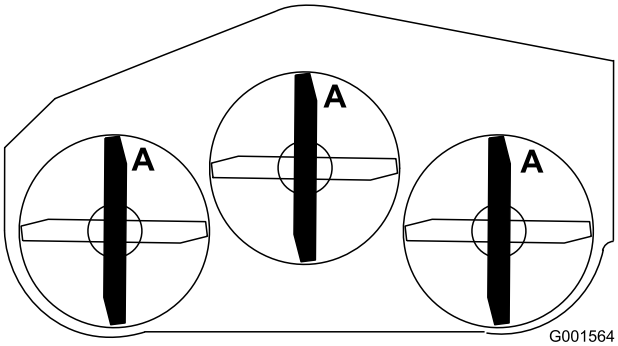

Figure 55

4. Measure from a level surface to the cutting edge, position A, of the blades (Figure 56).

   Note: Note this dimension.

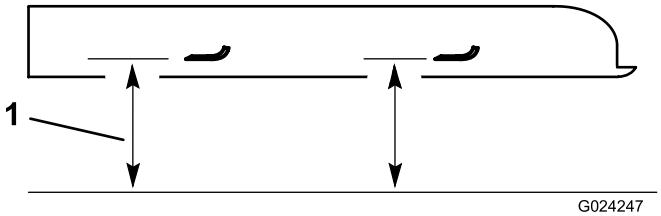

Figure 56

1. Measure from the cutting edge to a level surface

5. Rotate the opposite ends of the blades forward.
6. Measure from a level surface to the cutting edge of the blades at the same position as in step 3.

   Note: The difference between the dimensions obtained in steps 3 and 4 must not exceed 3 mm (1/8 inch). If this dimension exceeds 3 mm (1/8 inch), the blade is bent and must be replaced. Refer to Removing the Blades (page 39) and Installing the Blades (page 40).

⚠ WARNING

A blade that is bent or damaged could break apart and could seriously injure or kill you or bystanders.

- **Always replace bent or damaged blade with a new blade.**
- **Never file or create sharp notches in the edges or surfaces of blade.**

Removing the Blades

Replace the blades if you hit a solid object or if the blades are out of balance or bent. To ensure optimum performance and continued safety conformance of the machine, use genuine Toro replacement blades. Replacement blades made by other manufacturers may result in non-conformance with safety standards.

1. Hold the blade bolt with a wrench.
2. Remove the nut, blade bolt, curved washer, blade, spacers, and thin washer from the spindle (Figure 57).

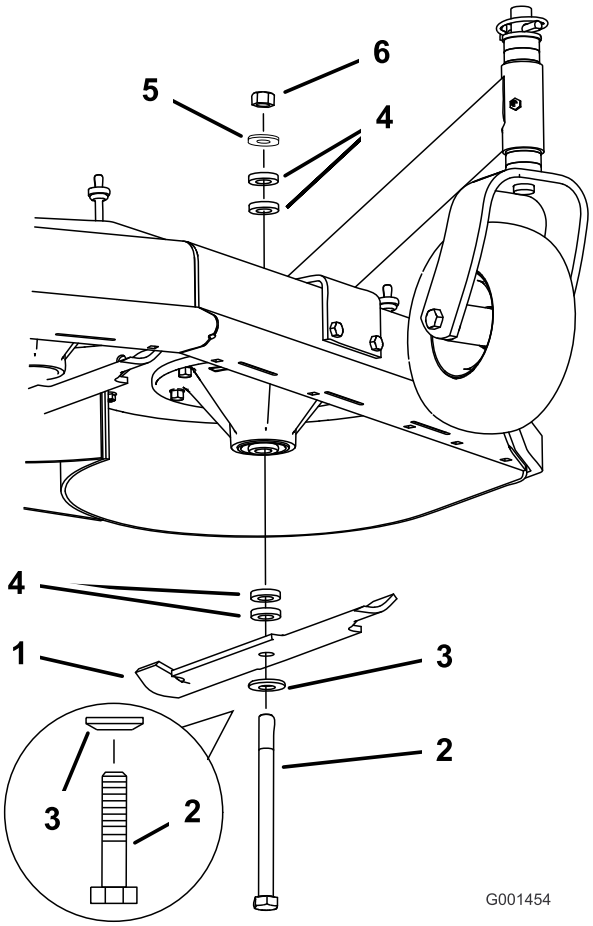

Figure 57

1. Blade
2. Blade bolt
3. Curved washer
4. Spacer
5. Thin washer
6. Nut

Sharpening the Blades

1. Use a file to sharpen the cutting edge at both ends of the blade (Figure 58).

   Note: Maintain the original angle. The blade remains balanced if the same amount of material is removed from both cutting edges.

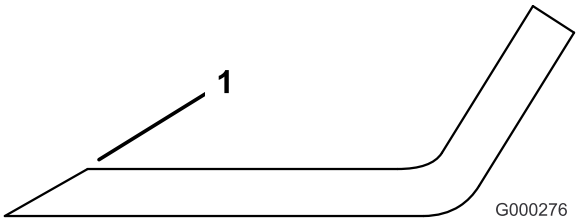

Figure 58

1. Sharpen at original angle

2. Check the balance of the blade by putting it on a blade balancer (Figure 59).

   Note: If the blade stays in a horizontal position, the blade is balanced and can be used. If the blade is not balanced, file some metal off the end of the sail area only (Figure 59). Repeat this procedure until the blade is balanced.

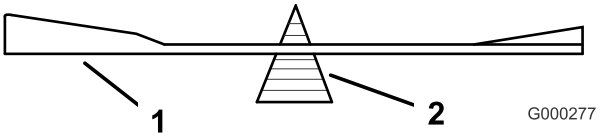

Figure 59

1. Blade
2. Balancer

Installing the Blades

1. Install the curved washer and then the blade onto the bolt. Select the proper number of spacer(s) for the height of cut, and slide the bolt into the spindle (Figure 57).

   Important: The curved part of the blade must point upward toward the inside of the mower to ensure proper cutting.

2. Install the remaining spacer(s) and secure them with a thin washer and a nut (Fig. Figure 57).
3. Torque the blade bolt to 101 to 108 N-m (75 to 80 ft-lb).

Adjusting the Blade Brake

1. Disengage the PTO, turn the ignition key to the off position, and remove the key.
2. Wait for all moving parts to stop before leaving the operating position and setting the parking brake.
3. If necessary, adjust the spring mounting bolts so that the blade-brake pad rubs against both sides of the pulley groove (Figure 60).
4. Adjust the nut at the end of the blade brake rod until there is 3 mm to 5 mm (1/8 to 3/16 inch) between the nut and the spacer (Figure 60).
5. Engage the blades.

   Note: Ensure that the blade brake pad no longer contacts the pulley groove.

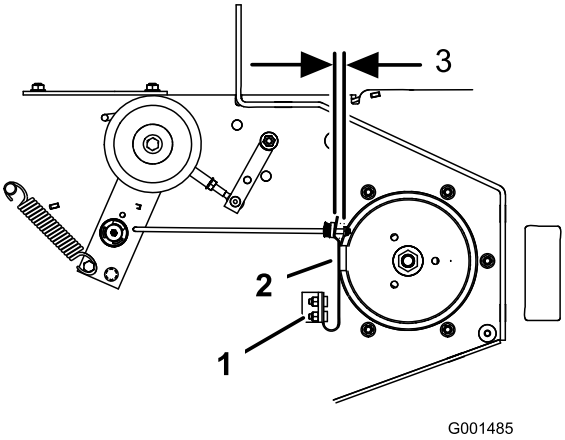

Figure 60

1. Spring mounting bolts
2. Blade-brake pad
3. 3 mm to 5 mm (1/8 to 3/16 inch)

Replacing the Grass Deflector

⚠ WARNING

An uncovered discharge opening could allow the lawn mower to throw objects in the operator's or bystander's direction and result in serious injury. Also, contact with the blade could occur.

Never operate the lawn mower unless you install a cover plate, a mulch plate, grass deflector or bagger.

1. Remove the locknut, bolt, spring and spacer holding the deflector to the pivot brackets (Figure 61).

   Note: Remove the damaged or worn grass deflector.

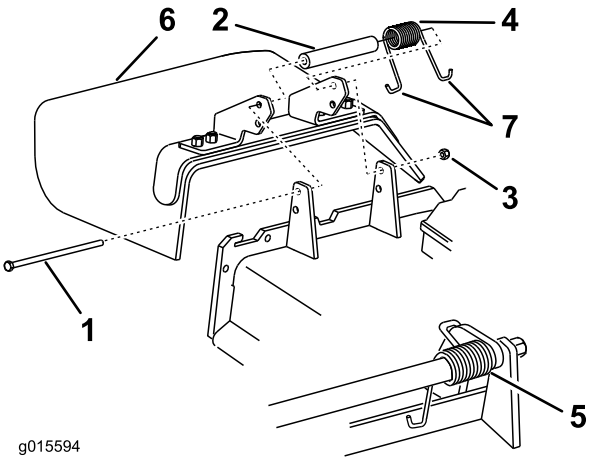

Figure 61

1. Bolt
2. Spacer
3. Locknut
4. Spring
5. Spring installed
6. Grass deflector
7. J-hook end of spring

2. Place the spacer and spring onto the grass deflector. Place one J-hook end of the spring behind the deck edge.

   Note: Install one J-hook end of the spring is installed behind the deck edge before installing the bolt as shown in Figure 61.

3. Install the bolt and nut. Place one J-hook end of the spring around the grass deflector (Figure 61).

   Important: The grass deflector must be able to rotate. Lift the deflector up to the fully open position and ensure that it rotates into the fully down position.

Storage

1. Disengage the power take-off (PTO), set the parking brake, turn the ignition key to the Off position, and remove the key.
2. Remove grass clippings, dirt, and grime from the external parts of the entire machine, especially the engine. Clean dirt and chaff from the outside of the engine cylinder-head fins and the blower housing.

   Important: You can wash the machine with mild detergent and water. Do not pressure-wash the machine. Avoid excessive use of water, especially near the shift-lever plate and the engine.

3. Check the brakes; refer to Checking the Brakes (page 32).
4. Service the air cleaner; refer to Servicing the Air Cleaner (page 26).
5. Grease and lubricate the machine; refer to Lubrication (page 25).
6. Change the engine oil; refer to Changing the Engine Oil (page 27).
7. Check the tire pressure; refer to Checking the Tire Pressure (page 31).
8. For long-term storage:
   A. Add stabilizer/conditioner additive to fuel in the tank.
   B. Run the engine to distribute conditioned fuel through the fuel system (5 minutes).
   C. Stop the engine, allow it to cool, and drain the fuel tank; refer to Servicing the Fuel Tank in Fuel System Maintenance (page 29), or operate engine until it stops.
   D. Start the engine and run it until it stops. Repeat the process, with the choke on, until the engine will not start.
   E. Dispose of fuel properly. Recycle it according to local codes.

   Note: Do not store stabilizer/conditioned gasoline over 90 days.

9. Condition the engine for storage as follows:
   A. Remove the spark plug(s) and check the condition; refer to Removing the Spark Plugs (page 28).
   B. Pour 2 tablespoons of engine oil into the engine through each spark-plug hole.
   C. Rotate the engine using the starter of the machine.

   Note: Rotating the engine distributes the oil inside the cylinder.

   D. Install the spark plug(s).

   Note: Do not connect the spark-plug wires to the spark plugs.

10. Check and tighten all bolts, nuts, and screws. Repair or replace any part that is damaged or worn.

11. Paint all scratched or bare metal surfaces with paint available from your Authorized Service Dealer.

12. Store the machine in a clean, dry garage or storage area. Remove the key from the ignition switch and keep it in a memorable place. Cover the machine to protect it and keep it clean.

Troubleshooting

Problem	Possible Cause	Corrective Action
The engine will not start, starts hard, or fails to keep running.	1. The fuel tank is empty. 2. The fuel-shutoff valve is closed. 3. The choke is not in the correct position. 4. The air cleaner is dirty. 5. The spark-plug wire is loose or disconnected. 6. The spark plug is pitted or fouled, or the gap is incorrect. 7. There is dirt in the fuel filter. 8. Dirt, water, or stale fuel is in the fuel system.	1. Fill the fuel tank with gasoline. 2. Open the fuel-shutoff valve. 3. Close the choke if the engine is cold; open the choke if the engine is warm. 4. Clean or replace the air-cleaner element. 5. Install the wire on spark plug. 6. Install a new, correctly gapped spark plug. 7. Replace the fuel filter. 8. Contact an Authorized Service Dealer.
The engine loses power.	1. The engine load is excessive. 2. The air cleaner is dirty. 3. The oil level in the crankcase is low. 4. The cooling fins and air passages under the engine blower housing are plugged. 5. The spark plug is pitted or fouled, or the gap is incorrect. 6. The vent hole in the fuel cap is plugged. 7. There is dirt in the fuel filter. 8. Dirt, water, or stale fuel is in the fuel system.	1. Reduce the ground speed. 2. Clean the air-cleaner element. 3. Add oil to the crankcase. 4. Remove the obstruction from the cooling fins and air passages. 5. Install a new, correctly gapped spark plug. 6. Clean or replace the fuel cap. 7. Replace the fuel filter. 8. Contact an Authorized Service Dealer.
The engine overheats.	1. The engine load is excessive. 2. The oil level in the crankcase is low. 3. The cooling fins and air passages under the engine blower housing are plugged.	1. Reduce the ground speed. 2. Add oil to the crankcase. 3. Remove the obstruction from the cooling fins and air passages.
The machine does not drive.	1. The shift lever is in neutral. 2. The traction belt is worn, loose, or broken. 3. The traction belt is off a pulley. 4. The idler spring is broken or missing.	1. Move the shift lever to a drive gear position. 2. Change the belt. 3. Change the belt. 4. Replace the spring.
There is abnormal vibration.	1. One/several cutting blades is/are bent or unbalanced. 2. A blade mounting bolt is loose. 3. The engine mounting bolts are loose. 4. The engine pulley, idler pulley, or blade pulley is loose. 5. The engine pulley is damaged. 6. The blade spindle is bent.	1. Install new cutting blade(s). 2. Tighten the blade mounting bolt. 3. Tighten the engine mounting bolts. 4. Tighten the appropriate pulley. 5. Contact an Authorized Service Dealer. 6. Contact an Authorized Service Dealer.
The machine produces an uneven cutting height.	1. The blade(s) is/are not sharp. 2. One/several cutting blade(s) is/are bent. 3. The mower is not level. 4. The underside of the mower is dirty. 5. The tire pressure is not correct. 6. A blade spindle is bent.	1. Sharpen the blade(s). 2. Install new cutting blade(s). 3. Level the mower from side-to-side and front-to-rear. 4. Clean the underside of the mower. 5. Adjust the tire pressure. 6. Contact an Authorized Service Dealer.

Problem	Possible Cause	Corrective Action
The blades do not rotate.	1. The mower deck belt is worn or loose.	1. Check the belt tension.
	2. The mower deck belt is broken.	2. Install a new deck belt.
	3. The mower deck belt is off pulley.	3. Inspect the belt and replace it if it is damaged. Check the pulleys and idlers and adjust the belt tension.
	4. The idler spring is broken or missing.	4. Replace the spring.

Schematics

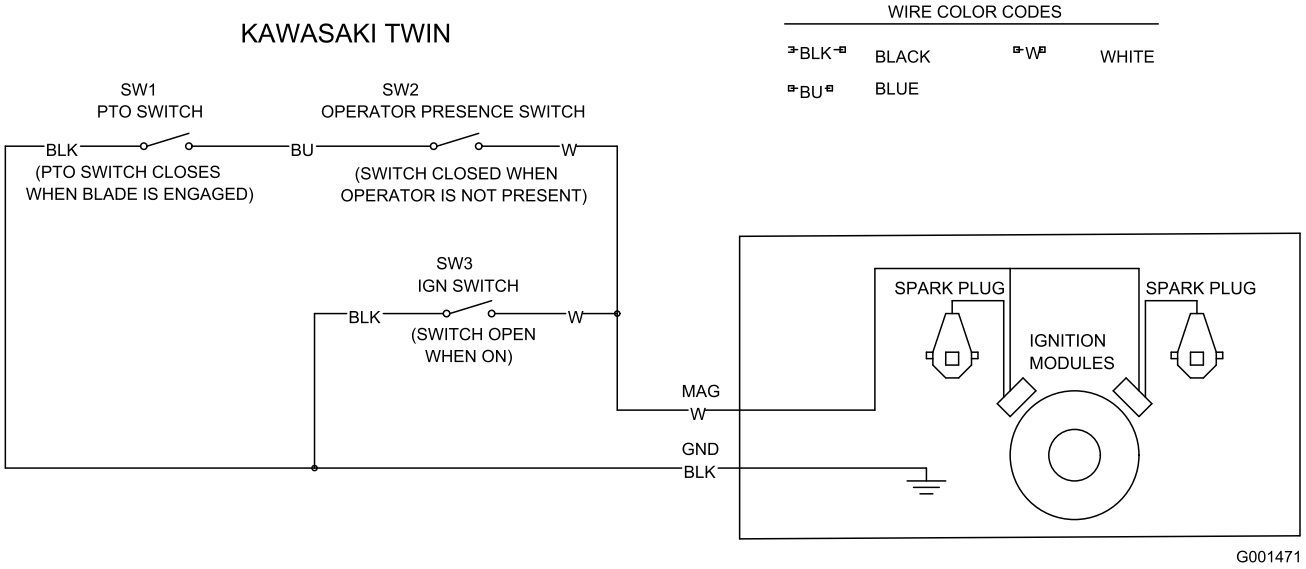

Electrical Schematic (Rev. -A)

Notes:

The Toro Total Coverage Warranty

A Limited Warranty (see warranty periods below)

Landscape
Contractor
Equipment
(LCE)

Conditions and Products Covered

The Toro Company and its affiliate, Toro Warranty Company, pursuant to an agreement between them, jointly promise to the original purchaser to repair the Toro Products listed below if defective in materials or workmanship.

The following time periods apply from the date of purchase by the original owner:

Products	Warranty Period
21 in. Mowers	2 years Residential Use[1] 1 year Commercial Use
• Engines[4]	Honda – 2 years Kawasaki – 3 years
30 in. Mowers	2 years Residential Use[1] 1 year Commercial Use
• Engines[4]	Kawasaki – 3 years
Mid-Size Walk-Behind Mowers	2 years
• Engines[4]	Kawasaki – 3 years
Grand Stand® Mowers	5 years or 1,200 hours[2]
• Engines[4]	3 years
• Frame	Lifetime (original owner only)[3]
Z Master® 2000 Series Mowers	4 years or 500 hours[2]
• Engines[4]	3 years
• Frame	Lifetime (original owner only)[3]
Z Master® 3000 Series Mowers	5 years or 1,200 hours[2]
• Engines[4]	3 years
• Frame	Lifetime (original owner only)[3]
Z Master® 5000 Series Mowers	5 years or 1,200 hours[2]
• Engines[4]	Kohler Command – 2 years Kohler EFI – 3 years
• Frame	Lifetime (original owner only)[3]
Z Master® 6000 Series Mowers	5 years or 1,200 hours[2]
• Engines[4]	Kawasaki – 3 years
• Frame	Lifetime (original owner only)[3]
Z Master®7000 Series Mowers	5 years or 1,200 hours[2]
• Engines[4]	2 years
• Frame	Lifetime (original owner only)[3]
Z Master®8000 Series Mowers	2 years or 1,200 hours[2]
• Engines[4]	2 years
• Frame	Lifetime (original owner only)[3]
All Mowers	
• Battery	90 days Parts and Labor 1 year Parts only
• Belts and Tires	90 days
• Attachments	1 year

[1]Residential use means use of the product on the same lot as your home. Use at more than one location is considered commercial use and the commercial warranty would apply.

[2]Whichever occurs first.

[3]Lifetime Frame Warranty - If the main frame, consisting of the parts welded together to form the tractor structure that other components such as the engine are secured to, cracks or breaks in normal use, it will be repaired or replaced, at Toro's option, under warranty at no cost for parts and labor. Frame failure due to misuse or abuse and failure or repair required due to rust or corrosion are not covered.

[4]Some engines used on Toro Products are warranted by the engine manufacturer.

Instructions for Obtaining Warranty Service

If you think that your Toro Product contains a defect in materials or workmanship, follow this procedure:

1. Contact any Authorized Toro Service Dealer to arrange service at their dealership. To locate a dealer convenient to you, refer to the Yellow Pages of your telephone directory (look under “Lawn Mowers”) or access our web site at www.Toro.com. You may also call the numbers listed in item #3 to use the 24-hour Toro Dealer locator system.
2. Bring the product and your proof of purchase (sales receipt) to the Service Dealer. The dealer will diagnose the problem and determine if it is covered under warranty.
3. If for any reason you are dissatisfied with the Service Dealer’s analysis or with the assistance provided, contact us at:

   RLC Customer Care Department
   Toro Warranty Company
   8111 Lyndale Avenue South
   Bloomington, MN 55420-1196
   888-865-5676 (U.S. Customers)
   888-865-5691 (Canada customers)

Owner Responsibilities

You must maintain your Toro Product by following the maintenance procedures described in the *Operator's Manual*. Such routine maintenance, whether performed by a dealer or by you, is at your expense.

Items and Conditions Not Covered

There is no other express warranty except for special emission system coverage and engine warranty coverage on some products. This express warranty does not cover the following:

- Cost of regular maintenance service or parts, such as filters, fuel, lubricants, oil changes, spark plugs, air filters blade sharpening or worn blades, cable/linkage adjustments, or brake and clutch adjustments
- Components failing due to normal wear
- Any product or part which has been altered or misused or neglected and requires replacement or repair due to accidents or lack of proper maintenance
- Pickup and delivery charges
- Repairs or attempted repairs by anyone other than an Authorized Toro Service Dealer
- Repairs necessary due to failure to follow recommended fuel procedure (consult *Operator's Manual* for more details)
  - Removing contaminants from the fuel system is not covered
  - Use of old fuel (more than one month old) or fuel which contains more than 10% ethanol or more that 15% MTBE
  - Failure to drain the fuel system prior to any period of non-use over one month

General Conditions

All repairs covered by these warranties must be performed by an Authorized Toro Service Dealer using Toro approved replacement parts.

Neither The Toro Company nor Toro Warranty Company is liable for indirect, incidental or consequential damages in connection with the use of the Toro Products covered by this warranty, including any cost or expense of providing substitute equipment or service during reasonable periods of malfunction or non-use pending completion of repairs under this warranty.

All implied warranties of merchantability (that the product is fit for ordinary use) and fitness for use (that the product is fit for a particular purpose) are limited to the duration of the express warranty.

Some states do not allow exclusions of incidental or consequential damages, or limitations on how long an implied warranty lasts, so the above exclusions and limitations may not apply to you.

This warranty gives you specific legal rights, and you may also have other rights which vary from state to state.

Countries Other than the United States or Canada

Customers who have purchased Toro products outside the United States or Canada should contact their Toro Distributor (Dealer) to obtain guarantee policies for your country, province, or state. If for any reason you are dissatisfied with your Distributor's service or have difficulty obtaining guarantee information, contact the Toro importer. If all other remedies fail, you may contact us at Toro Warranty Company.

Australian Consumer Law: Australian customers will find details relating to the Australian Consumer Law either inside the box or at your local Toro Dealer.