FORM NO. 3316–964 EN

TORO®

1800 Power Curve®

Snowthrower

Model No. 38025 – 59000001 & Up

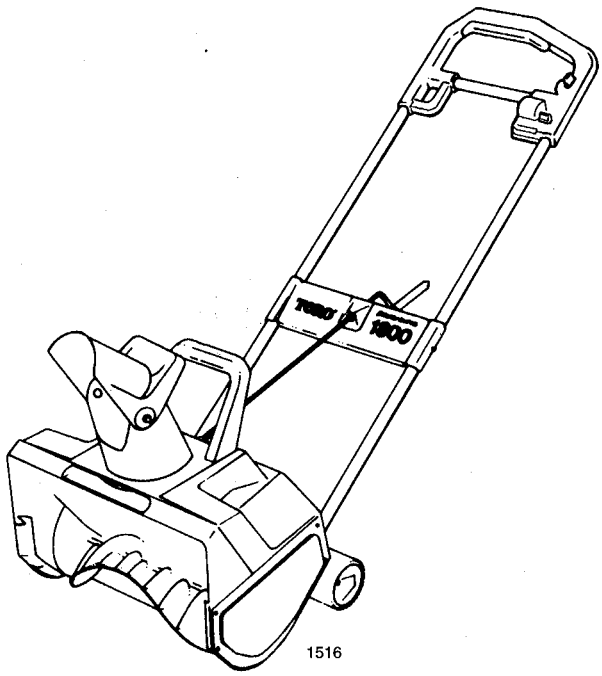

Operator's Manual

IMPORTANT: Read this manual carefully. It contains information about your safety and the safety of others. Also become familiar with the controls and their proper use before you operate the product.

Introduction

Thank you for purchasing a Toro product.

All of us at Toro want you to be completely satisfied with your new product, so feel free to contact your local Authorized Service Dealer for help with service, genuine Toro parts, or other information you may require.

Whenever you contact your Authorized Service Dealer or the factory, always know the model and serial numbers of your product. These numbers will help the Service Dealer or Service Representative provide exact information about your specific product. You will find the model and serial number decal located in a unique place on the product as shown below.

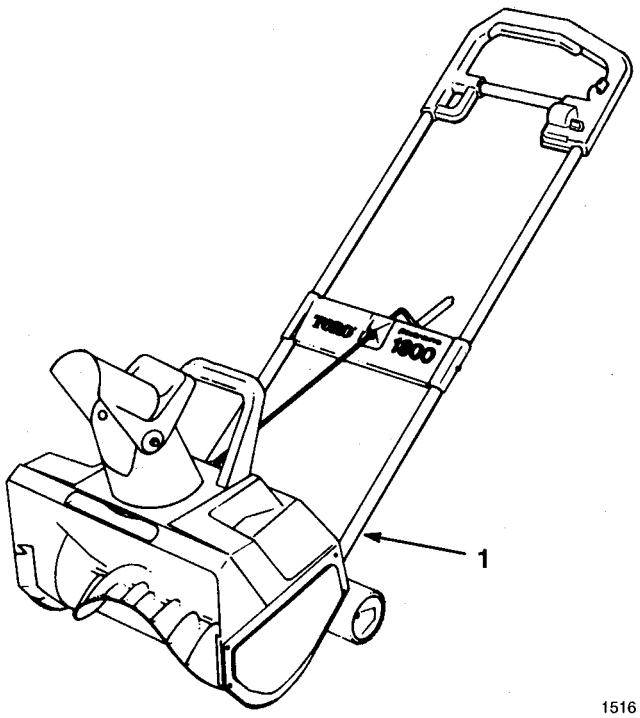

1516

1. Model and Serial Number Decal

For your convenience, write the product model and serial numbers in the space below.

Model No: _____

Serial No. _____

Read this manual carefully to learn how to operate and maintain your product correctly. Reading this manual will help you and others avoid personal injury and damage to the product. Although Toro designs, produces and markets safe, state-of-the-art products, you are responsible for using the product properly and safely. You are also responsible for training persons who you allow to use the product about safe operation.

The Toro warning system in this manual identifies potential hazards and has special safety messages that help you and others avoid personal injury, even death. DANGER, WARNING and CAUTION are signal words used to identify the level of hazard. However, regardless of the hazard, be extremely careful.

DANGER signals an extreme hazard that will cause serious injury or death if the recommended precautions are not followed.

WARNING signals a hazard that may cause serious injury or death if the recommended precautions are not followed.

CAUTION signals a hazard that may cause minor or moderate injury if the recommended precautions are not followed.

Two other words are also used to highlight information. "Important" calls attention to special mechanical information and "Note" emphasizes general information worthy of special attention.

The left and right side of the machine is determined by standing behind the handle in the normal operator's position.

©The Toro Company – 1994
All Rights Reserved

Printed in USA

Contents

	Page
Safety	2
Safe Operating Practices	2
Safety and Instruction Decals	4
Assembly	5
Install Upper Handle And Chute Crank	5
Install Discharge Chute (Fig. 4)	6
Before Starting	7
Unlocking Snowthrower	7
Securing Power Supply Cord	7
Operation	9
Before Operating	9
Starting/Stopping	9
Operating Tips	9
Maintenance	12
Lubricating Snowthrower	12
Replacing Scraper	12
Replacing Rotor	12
Replacing Belts	14
Storage	16
Toro Service Support	16
Warranty	Back Cover

Safety

To assure maximum safety, best performance, and to gain knowledge of the product, it is essential that you or any other operator of the snowthrower read and understand the contents of this manual before the motor is ever started. Pay particular attention to the safety alert symbol ⚠ which means CAUTION, WARNING OR DANGER — "personal safety instruction." Read and understand the instruction because it has to do with safety. FAILURE TO COMPLY WITH INSTRUCTION MAY RESULT IN PERSONAL INJURY.

SAVE THESE INSTRUCTIONS FOR FUTURE REFERENCE!

Safe Operating Practices

Always follow all safety instructions to avoid serious injury or death.

General Operation

1. Read this manual carefully before operating the snowthrower. Become familiar with the controls and proper use of the snowthrower. Never allow children under 16 years of age to operate the snowthrower. Never allow adults to operate snowthrower without proper instructions.

2. The operator of the snowthrower is responsible for keeping everyone, especially children and pets, away from area of operation. The operator is responsible for accidents or hazards occurring to other people or their property. Always direct discharge chute away from people.

3. Thoroughly inspect area where snowthrower will be used and remove doormats, sleds, boards, sticks, stones, wire and debris. Watch for foreign objects while snowthrowing.

4. Wear adequate winter clothing and rubber boots that will ensure proper footing on slippery surfaces. Do not wear loose-fitting clothing that could possibly get caught in moving parts.

5. Keep all shields and safety devices in place. If a shield, safety device or decal is illegible, damaged or lost, repair or replace it before beginning operation. Also, tighten any loose nuts, bolts or screws.

6. Do not use snowthrower on gravel or crushed rock surfaces. Flying debris may cause damage or personal injury.

7. **WARNING** - To prevent electric shock, use only a U.L. approved extension cord suitable for outdoor use in cold temperatures (see page 7 for proper size and use). Replace a damaged extension cord immediately.

8. To prevent disconnection of snowthrower cord from extension cord during operation, tie extension cord to loop in upper handle before connecting to snowthrower; refer to page 8, Figure 6 for proper procedures.

While Operating

9. Keep people and pets a safe distance away from the snowthrower and area of operation.

10. Avoid accidental starting. Don't carry plugged in snowthrower with hand on control bar. Keep away from control bar while plugging in cord.

11. If the extension cord is damaged in any manner while plugged in, remove extension cord from wall receptacle.

12. Do not abuse extension cord. Never carry snowthrower by cord or pull sharply on cord to disconnect from receptacle. Keep cord away from heat, oil and sharp edges.

13. Always keep extension cord away from rotating parts to prevent damage and electric shock.

14. Operate the snowthrower only when there is good visibility or light. Always maintain secure footing and balance, and keep a firm grip on the handle. Do not overreach.

15. Do not use snowthrower on a roof.

16. Be attentive when using the snowthrower, and stay alert for holes in the terrain and other hidden hazards.

17. **STAY AWAY FROM DISCHARGE OPENING WHILE OPERATING THE SNOWTHROWER.** Keep face, hands, feet, and any other part of your body or clothing away from concealed, moving or rotating parts.

18. Never operate snowthrower near bystanders, glass enclosures, automobiles, trucks, window wells or a drop-off without proper adjustment of the snow discharge angle; refer to page 9, item 3 for correct operating procedure.

19. Clear snow from slopes by going up and down, never across the face. Use caution when changing directions. Never clear snow from steep slopes.

20. Operation of the snowthrower in the hand–held position (wheels off the ground) is unsafe except when used in accordance with special instructions in the Operator's Manual. See page 10, items 6 and 7.

21. When using the secondary handle, always turn chute in the opposite direction from where you are standing.

22. Do not force chute deflector too far forward. A gap will occur between chute and chute deflector which will allow snow and anything that may be picked up by snowthrower to fly in the direction of the operator.

23. **DO NOT <u>OVERLOAD</u> THE SNOWTHROWER BY CLEARING SNOW AT TOO FAST A RATE. LET THE UNIT DO THE WORK.**

24. If a solid object is hit or snowthrower vibrates abnormally, stop snowthrower and wait for all movement to stop. Disconnect extension cord and check snowthrower immediately for possible damage, an obstruction, debris in rotor or loose parts. Vibration is generally a sign of trouble. Repair any damage before operating snowthrower again.

25. Before adjusting, cleaning, repairing or inspecting the snowthrower, or before unclogging the discharge chute, stop snowthrower by releasing the control bar and wait for all moving parts to stop. Also, disconnect cord from receptacle to prevent accidental starting.

26. When through using snowthrower, let it run for a few minutes so ice does not freeze moving parts.

27. Disconnect extension cord from cord receptacle, turn key clockwise and remove key from handle if snowthrower will be left unattended.

Maintenance

28. Perform only those maintenance instructions described in this manual. Disconnect cord from receptacle before performing maintenance procedures to prevent the possibility of accidental starting. If major repairs are ever needed, contact your local Authorized TORO Service Dealer or TORO Service Center for assistance.

29. Keep the snowthrower in safe operating condition by keeping nuts, bolts and screws tight. Check all fasteners frequently to assure they are tight.

30. Store snowthrower indoors when not in use in a dry, locked-up place out of reach of children. Remove extension cord from snowthrower and store with snowthrower to prevent misplacement. Lock snowthrower and remove key from handle. Store key in a memorable place.

31. At the time of manufacture, the snowthrower conformed to and exceeded safety standards in effect for snowthrowers. Therefore, to assure best performance and safety, purchase genuine TORO replacement parts and accessories to keep your TORO all TORO. **NEVER USE "WILL FIT" REPLACEMENT PARTS AND ACCESSORIES.** The TORO logo assures genuineness.

Safety and Instruction Decals

Safety decals and instructions are easily visible to the operator and are located near any area of potential danger. Replace any decal that is damaged or lost.

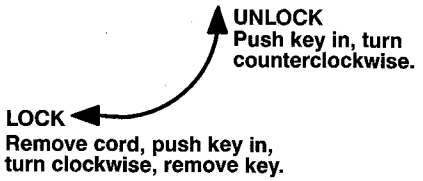

ON HANDLE



ON REAR OF SHROUD

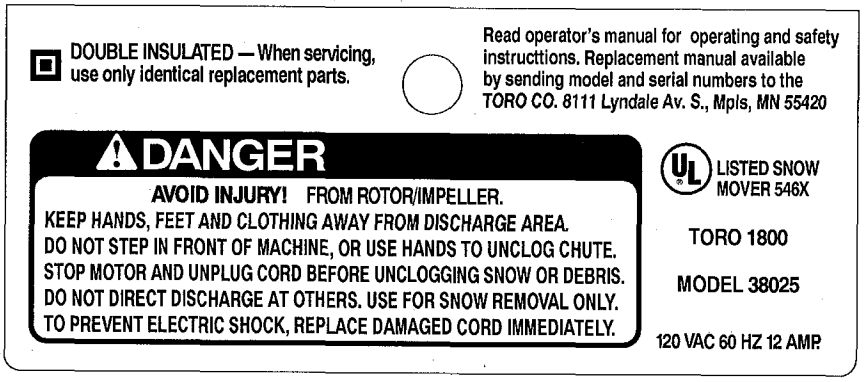

ON REAR OF SHROUD
(Part No. 73-0450)

Assembly

Install Upper Handle And Chute Crank

Note: Determine left and right hand sides of snowthrower by standing in normal operating position.

1. Stand snowthrower on wheels and position upper handle to prepare for handle assembly. Inspect the open internal wiring. If damaged do not assemble. Contact your TORO Service Dealer.

⚠ CAUTION

POTENTIAL HAZARD
- **Internal wiring could be damaged during assembly.**

WHAT CAN HAPPEN
- **Damaged wiring could cause serious personal injury when operating snowthrower.**

HOW TO AVOID THE HAZARD
- **Use care so electrical wiring will not be damaged during assembly.**
- **If wiring is damaged, do not assemble snowthrower. Contact your TORO Service Dealer.**

2. Carefully insert right side of upper tubing **over** end of lower right side tubing (Fig. 1).

3. Carefully insert left side of upper tubing **into** end of lower left side tubing (Fig. 1).

4. Squeeze upper tubes together as shown in Figure 1. Wiggle upper tubes down until mounting holes in upper and lower tubing are aligned (Fig. 1).

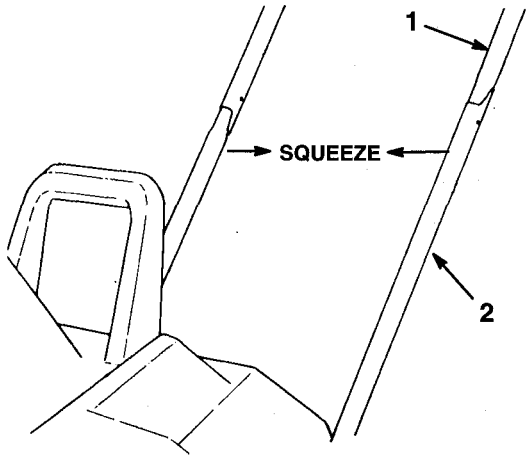

1531

Figure 1

1. Upper tubing
2. Lower tubing

5. Place the mounting plate over the tubes (Fig. 2). Align mounting plate holes with upper and lower tubing holes.

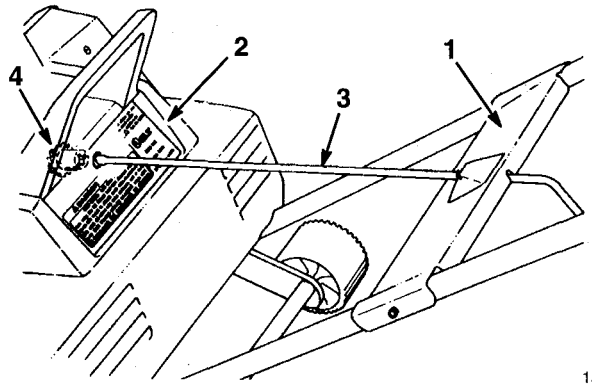

1532

Figure 2

1. Mounting plate
2. Shroud
3. Chute crank
4. Gear

6. Insert end of chute crank through hole in shroud. Turn chute crank rod **lightly** until flattened end drops into slot in gear. Firmly push chute crank into gear until it snaps into place (Fig. 2 & 3).

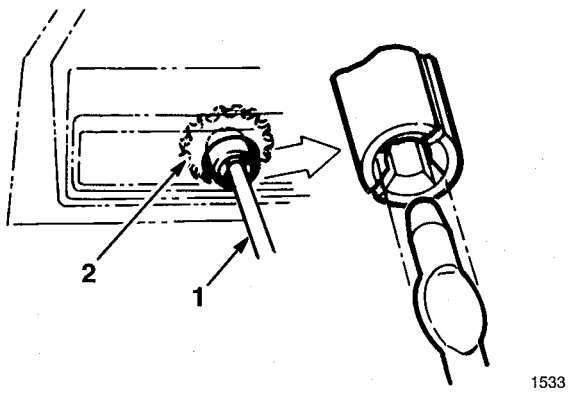

Figure 3

1. Chute crank
2. Chute crank gear

7. Secure upper and lower tubing and mounting plate together with (2) #10–24 machine screws and locknuts. Position screw heads on the outside of the mounting plate. **Be careful not to damage the internal electrical wiring when inserting screws.** If hole is blocked, use a blunt 1/8" punch to carefully route electrical wiring away from aligned holes.

Install Discharge Chute (Fig. 4)

1. Position deflector onto discharge chute, aligning mounting holes. Insert a rubber washer between deflector and discharge chute while maintaining hole alignment.

2. Secure deflector to discharge chute with (2) 5/16–18 carriage bolts, metal washers, and locknuts. Make sure the square shoulders on the carriage bolts align with inside square on discharge chute. Position metal washers to the outside of deflector as shown in Figure 3. DO NOT OVERTIGHTEN BOLTS.

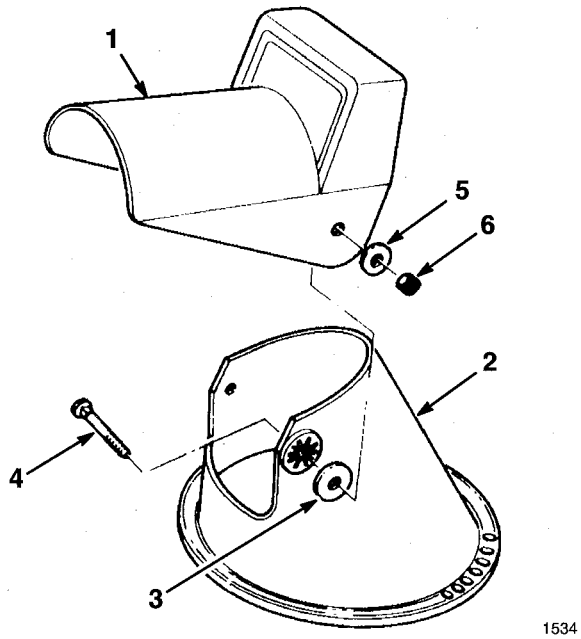

Figure 4

1. Chute deflector
2. Chute
3. Rubber washer
4. Carriage bolt
5. Metal washer
6. Locknut

Before Starting

Unlocking Snowthrower

1. To unlock snowthrower, push key into hole (Fig. 5). While holding key down, turn key counterclockwise. The interlock tab rotates away from prongs, allowing extension cord to be plugged in (Fig. 5). Do not attempt to remove key when in the unlocked position.

   Note: The interlock tab is a safety device to prevent unauthorized use of snowthrower.

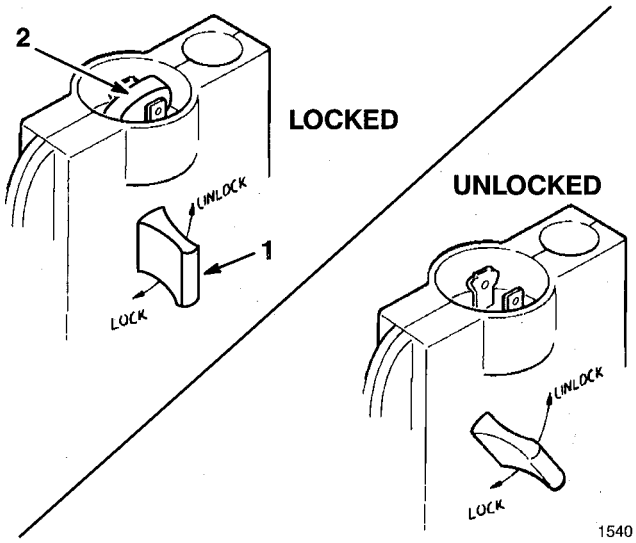

Figure 5

1. Key
2. Interlock tab

Securing Power Supply Cord

The proper extension cord is a requirement for safe and efficient use of your appliance. Use only a UL listed extension cord recommended for outdoor use. Refer to Extension Cord Chart below.

EXTENSION CORD CHART		
If length of extension cord is less than or equal to:	100 ft.	150 ft.
Assure wire size gauge (A.W.G.) in cord is:	16	14

Note: Use of extension cord over 150 feet is not recommended.

⚠ WARNING

POTENTIAL HAZARD
- **Contact with water while operating unit could cause electric shock.**

WHAT CAN HAPPEN
- **Electric shock can cause injury or death.**

HOW TO AVOID THE HAZARD
- **Don't handle plug or appliance with wet hands or while standing in water.**
- **Use only a UL listed extension cord recommended for outdoor cold weather use. Refer to Extension Cord Chart, page 7.**

1. Before connecting the extension cord to the snowthrower, tie the extension cord to the loop in the handle as shown in Figure 6. This helps to prevent the extension cord from pulling out of the snowthrower during operation.

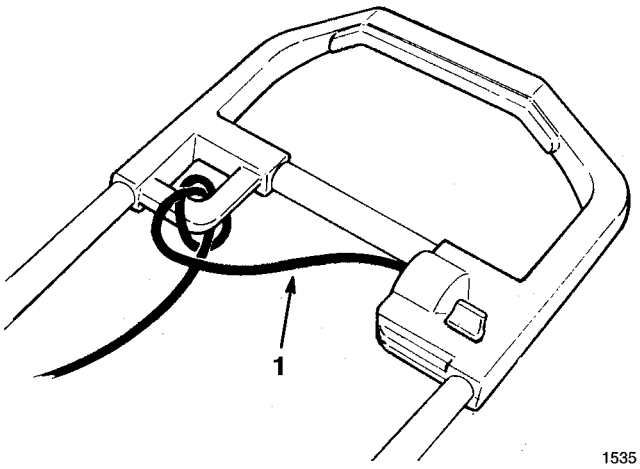

Figure 6

1. Extension cord

⚠ WARNING

POTENTIAL HAZARD
- **The electrical cord could be damaged.**

WHAT CAN HAPPEN
- **A damaged electrical cord could cause a shock or fire.**

HOW TO AVOID THE HAZARD
- **Thoroughly inspect electrical cord before using unit. If cord is damaged, do not operate unit. Replace or repair damaged cord immediately. Contact your TORO service dealer for assistance.**

Your unit has a polarized plug. This means one prong in the handle socket is larger than the other (Fig. 7). When inserting the end of a suitable extension cord into the handle socket, be sure to insert the enlarged prong into the wide slot in the extension cord end.

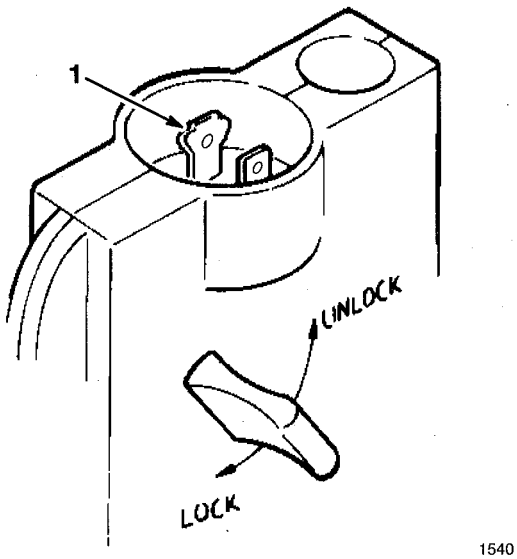

Figure 7

1. Enlarged prong

Operation

Before Operating

1. Check the condition of the unit. Make sure the rotor turns freely.

Starting/Stopping

1. To start rotor, squeeze the control bar (Fig. 8).

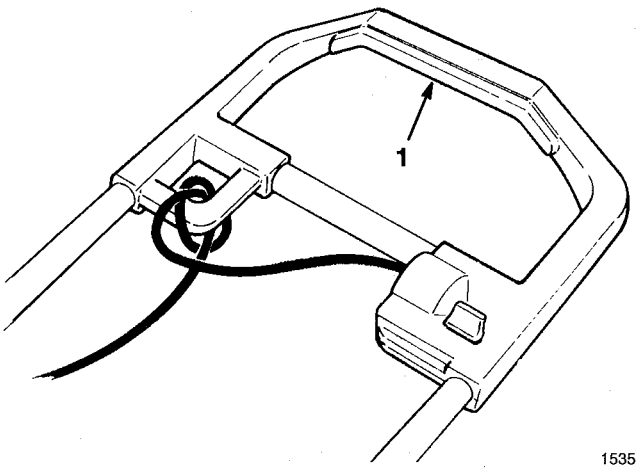

Figure 8

1. Control bar

2. To stop rotor, release the control bar.

Operating Tips

⚠ WARNING

POTENTIAL HAZARD

- **If snowthrower hits a foreign object while in operation, the object could be thrown in operator's or bystander's direction.**

WHAT CAN HAPPEN

- **Thrown objects can cause serious personal injury.**
- **Snowthrower could be damaged.**

HOW TO AVOID THE HAZARD

- **Keep the area to be cleared free of all foreign objects which may be picked up and thrown by the rotor blades.**

1. Always be sure to keep children and pets away from area of operation.

2. Keep the area to be cleared free of stones, toys, or other foreign objects which may be picked up and thrown by the rotor blades. Such items could be covered by snowfall and, therefore, unnoticed until struck by the rotor blades. If an obstruction or foreign object is hit while operating snowthrower, stop unit by releasing the control bar, unplug extension cord, remove obstruction, and check unit for damage.

3. ADJUSTING DISCHARGE CHUTE—Rotate the chute crank clockwise to move discharge chute to the left and counterclockwise to move chute to the right.

   Note: The chute crank makes a noise as you turn the crank. This is normal.

   The deflector handle on top of the discharge chute controls the height of the snow stream (Fig. 9). Adjust the height of the snow stream by raising or lowering the chute deflector.

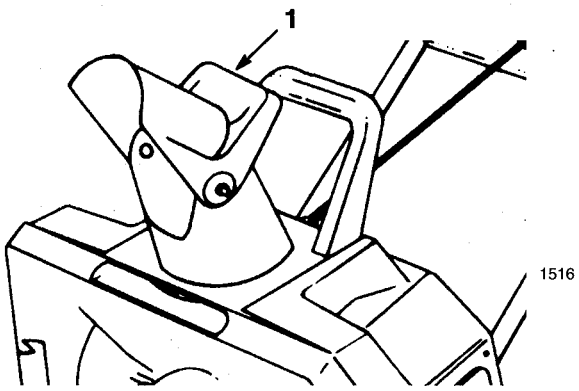

Figure 9

1. Chute deflector handle

⚠ WARNING

POTENTIAL HAZARD

- **A gap between chute and chute deflector will allow snow and anything that may be picked up by snowthrower to fly in the direction of the operator.**

WHAT CAN HAPPEN

- **Thrown objects could cause serious personal injury.**

HOW TO AVOID THE HAZARD

- **Do not force chute deflector too far forward so a gap appears between the chute and chute deflector.**
- **Do not over-tighten deflector mounting nuts so excessive force is required to adjust deflector.**

4. Begin snow removal near the electrical outlet and work outward. Blow back and forth, not away and toward outlet.

   When turning at the end of a swath, step over the cord and turn the snowthrower.

5. Always overlap each swath and discharge snow downwind when possible.

6. Shave down large banks of snow by placing the snowthrower on the bank. Lift the snowthrower by the primary and secondary handles only (Fig. 10). Let the unit's weight shave down the bank in a back and forth motion.

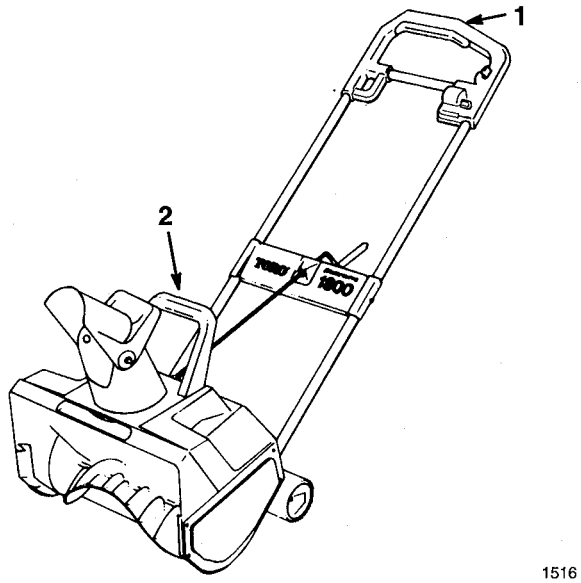

Figure 10

1. Primary handle
2. Secondary handle

7. When clearing steps or deep drifts, hold the unit by the primary and secondary handles (Fig. 10) and use a swinging or sweeping motion.

⚠ WARNING

POTENTIAL HAZARD

- **When using the secondary handle, never direct snow discharge chute at operator or bystanders. Foreign objects could be thrown by snowthrower.**

WHAT CAN HAPPEN

- **Thrown objects could cause serious personal injury.**

HOW TO AVOID THE HAZARD

- **When using the secondary handle, always turn the discharge chute in the opposite direction from where you or bystanders are standing.**

8. Keep extension cord clear of obstructions, sharp objects and all moving parts. Do not pull sharply on cord or abuse it in any manner. Frequently inspect cord for damage which could result in electric shock. If cord becomes damaged in any way, replace it.

9. In some snow and cold weather conditions, some controls and moving parts may freeze. Therefore, when any control becomes hard to operate, stop the motor by releasing the control bar, disconnect the extension cord and check all parts for freeze up. **DO NOT USE EXCESSIVE FORCE WHEN TRYING TO OPERATE THE CONTROLS IF FROZEN.** Free all controls and moving parts before operating.

10. When operating snowthrower, keep snowthrower wheels one inch off pavement by tipping unit forward. This helps prevent snow from building up on wheels.

11. AFTER CLEARING SNOW—Let motor run for a few minutes so ice doesn't freeze moving parts. After motor is shut off, wipe ice and snow off entire unit. Rotate chute crank several times to clear mechanism of snow.

12. Lock snowthrower when unit is not being used. Disconnect extension cord. Hold key down, turn clockwise and remove key from handle to prevent unauthorized use of machine. Store key in a memorable place.

Maintenance

⚠ WARNING

POTENTIAL HAZARD

- **If the extension cord is plugged into snowthrower and the key is in the handle, someone could accidentally operate snowthrower while you are performing maintenance on it.**

WHAT CAN HAPPEN

- **Operation of snowthrower while maintenance is being performed on it could cause serious personal injury.**

HOW TO AVOID THE HAZARD

- **Disconnect extension cord before you do any maintenance. Hold key down, turn clockwise and remove key from handle.**

Lubricating Snowthrower

The snowthrower does not have to be lubricated; all bearings are lubricated for the life of the product at the factory.

Replacing Scraper

A replaceable scraper is located at the bottom of the rotor housing.

1. Remove (2) screws securing scraper to snowthrower (Fig. 11).
2. Install new scraper and fasten securely with (2) screws.

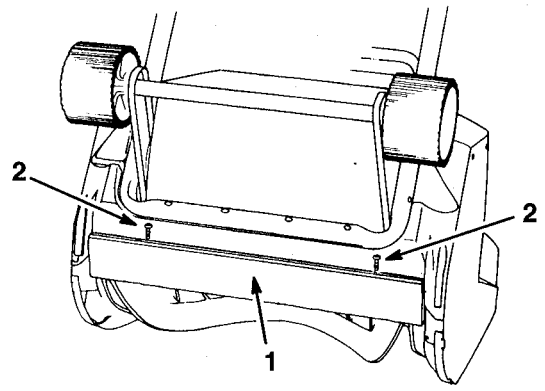

Figure 11

1. Scraper
2. Screw

Replacing Rotor

Note: Determine left and right sides of snowthrower by standing in the normal operating position.

1. Remove (3) screws securing right side cover and skid to snowthrower frame (Fig. 12).

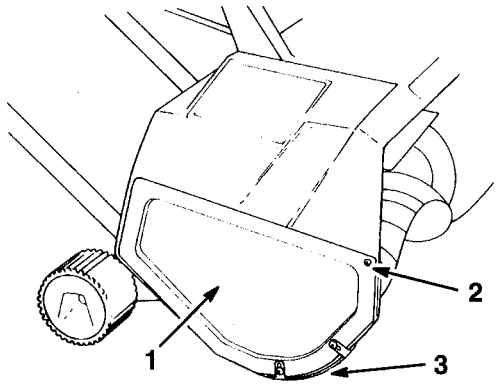

Figure 12

1. Right side cover
2. Screw
3. Skid

2. Using a 3/8" Allen wrench, turn rotor shaft clockwise (left hand thread) while holding rotor (Fig. 13). The Allen wrench may need to be tapped with a hammer to loosen rotor shaft. Wedge a stick or hammer handle in rotor to prevent rotation.

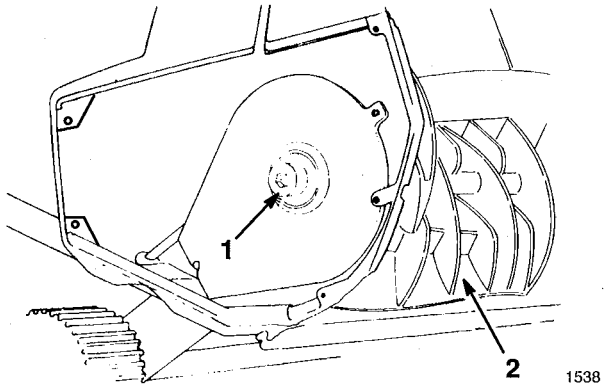

Figure 13

1. Rotor shaft
2. Rotor

Note: If you are unable to remove rotor shaft by holding rotor, remove left side cover and skid (Fig. 14). Hold hex nut with 7/8" wrench while unscrewing rotor shaft (Fig. 15).

3. Hold rotor and pull out rotor shaft.

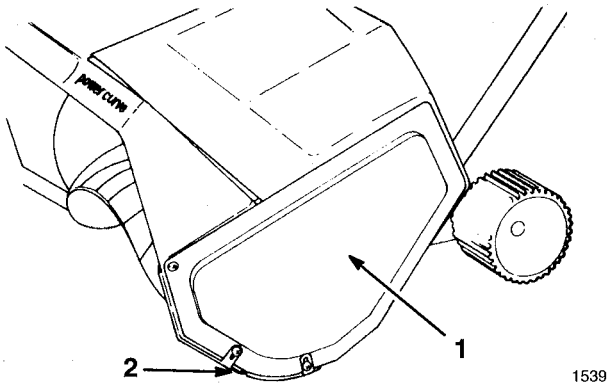

Figure 14

1. Left side cover
2. Skid

4. Remove rotor. Retain washer on right side of rotor for reassembly. Replace washer if worn.

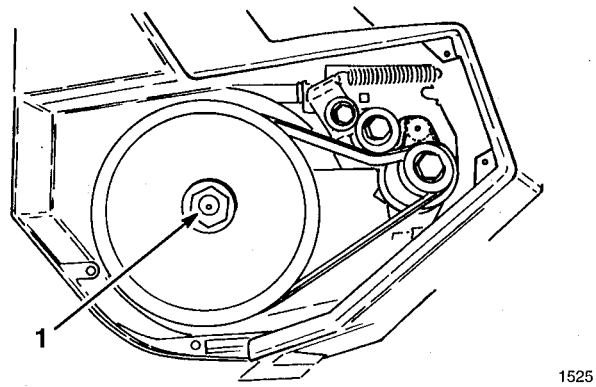

Figure 15

1. Hex nut

5. If necessary, insert a new washer into right side of new rotor.

6. Align left side of new rotor with coupler. The (3) bosses on rotor end must align with slots on coupler (Fig. 16). When mounting coupler to drive hex, coupler tabs must be aligned to inside. Slide right side of rotor into mounting position.

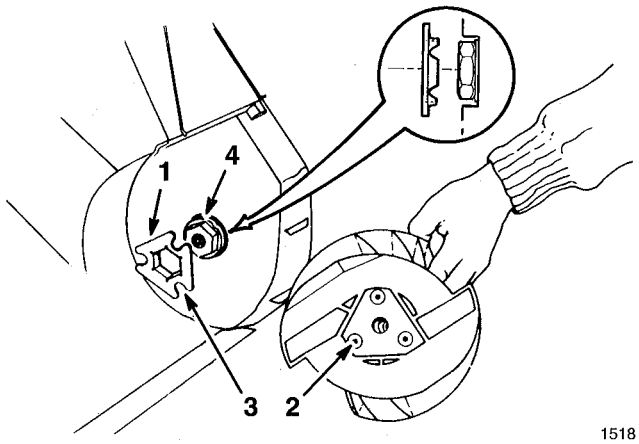

Figure 16

1. Coupler
2. Boss
3. Slot
4. Drive hex

7. Reinsert rotor shaft through rotor. Make sure that shaft fits into bearing on the right side. Torque to a minimum of 10 ft-lbs.

8. Reinstall cover and skid.

Replacing Belts

Large Belt Replacement

1. Remove (3) screws securing left side plate to snowthrower frame (Fig. 14). Remove side plate and skid.

⚠ CAUTION

POTENTIAL HAZARD
- **Idler spring could fly in your face while being removed.**

WHAT CAN HAPPEN
- **Contact with flying spring could cause personal injury.**

HOW TO AVOID THE HAZARD
- **Wear safety goggles when working with idler spring.**

2. Remove idler spring from idler arm (Fig. 17).

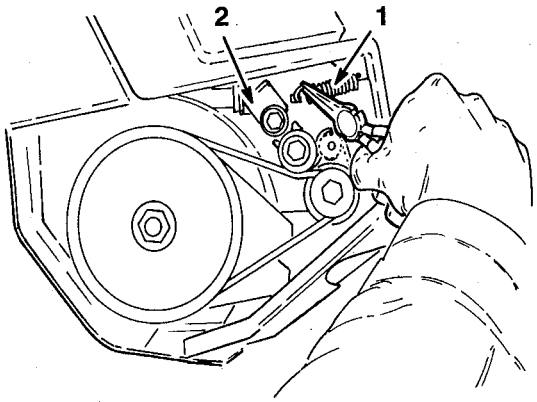

Figure 17

1. Idler spring
2. Idler arm

3. Rotate rotor with left hand while walking (sliding) belt off large pulley with right hand (Fig. 18).

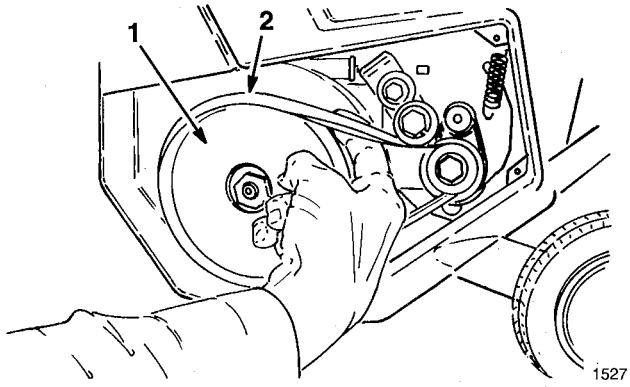

Figure 18

1. Large pulley
2. Belt

4. Slip new belt over small pulley. Lift up idler arm and slip belt under idler pulley (Fig. 19). Rotate rotor with left hand while walking (sliding) belt onto large pulley with right hand (Fig. 20).

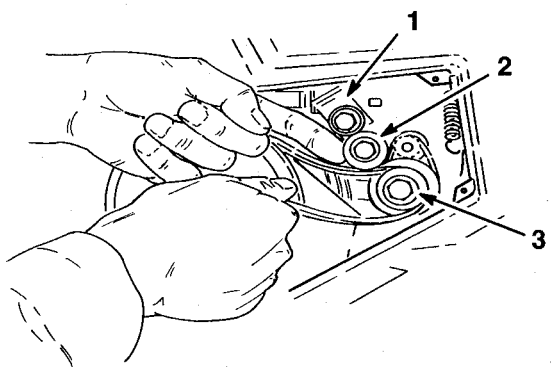

Figure 19

1. Idler arm
2. Idler pulley
3. Small pulley

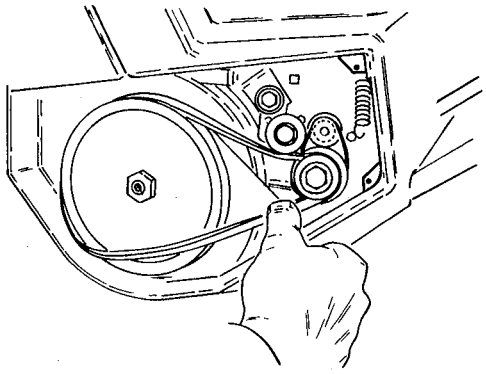

Figure 20

5. Reassemble idler spring, making sure idler pulley is riding on belt.

6. Reinstall left side cover and skid with (3) screws.

Small Belt Replacement

1. Remove (3) screws securing left side plate and skid to snowthrower frame (Fig. 14). Remove side plate and skid.

2. Remove large belt by slowly walking (sliding) it off small pulley (Fig. 18). Refer to steps 2-3 in Large Belt Replacement section.

3. Remove small pulley bolt (left hand thread) by turning bolt clockwise, remove (2) washers, and small pulley (Fig. 21).

4. Remove and discard small belt (Fig. 21).

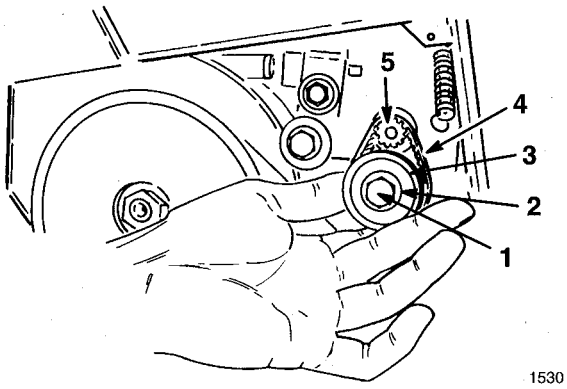

Figure 21

1. Bolt (left hand thread)
2. Washers
3. Small pulley
4. Small belt
5. Motor shaft pulley

5. Slide (2) washers onto bolt. Insert bolt through small pulley. Bolt must ride on bearings in small pulley.

6. Place new belt on small pulley.

7. Slide belt over motor shaft pulley (Fig. 21).

8. When tightening bolt, bolt head and washers must be flush against small pulley. Torque bolt to 25-30 in-lbs. **DO NOT OVERTIGHTEN BOLT.**

9. Slip large belt over small pulley (Fig. 20). Refer to Large Belt Replacement, steps 4-6.

Storage

1. Run snowthrower for a few minutes to melt any snow that may have accumulated on unit during use.
2. Disconnect the extension cord from the snowthrower.
3. Examine extension cord thoroughly for signs of wear or damage. Replace, if worn or damaged.
4. Examine the snowthrower thoroughly for worn, loose or damaged parts. If parts repair or replacement is necessary, contact your local Authorized TORO Service Dealer for assistance.
5. Store the extension cord with the snowthrower to prevent misplacement.
6. Store the snowthrower in a clean, dry place. Cover it to provide protection.

Toro Service Support

If your unit requires service or maintenance, your nearest TORO Master Service Dealer is the best dealer to assist you. Refer to the "Yellow Pages" of your local telephone directory in the section titled "Lawn Mowers." TORO Master Service Dealers are listed under the TORO trademark. If you need help locating a TORO Master Service Dealer near you, call 1-800-421-9684 for assistance.


TORO®

The Toro Promise

A Full One Year Residential Use Warranty

The Toro Company warrants this TORO Product for one year against defects in material or workmanship. To receive a replacement or repair, at Toro's option, just return the complete unit, postage prepaid, to the seller or any TORO Electric Service Dealer or the TORO Service Center, 5300 Shoreline Blvd., Mound, MN 55364, along with proof of purchase. This warranty covers product defects only. It does not cover incidental or consequential damages. Some states do not allow the exclusion or limitation of incidental or consequential damages, so the above limitation may not apply to you. This warranty gives you specific rights, and you may have other rights which vary from state to state.

COUNTRIES OTHER THAN THE UNITED STATES OR CANADA

Customers who have purchased TORO products exported from the United States or Canada should contact their TORO Distributor (Dealer) to obtain guarantee policies for your country, province, or state. If for any reason you are dissatisfied with your Distributor's service or have difficulty obtaining guarantee information, contact the TORO importer. If all other remedies fail, you may contact us at The Toro Company.