ONLY COPY
DO NOT
Tech. Public

FORM NO. 3316-972 UK

TORO®

43 cm

Walk-Behind Power Mower

Model No. 21000BC–5900001 & Up

Operator's Manual

IMPORTANT: Read this manual carefully. It contains information about your safety and the safety of others. Also become familiar with the controls and their proper use before you operate the product.

Introduction

Thank you for purchasing a Toro product.

All of us at Toro want you to be completely satisfied with your new product, so feel free to contact your local Authorized Service Dealer for help with service, genuine Toro parts, or other information you may require.

Whenever you contact your Authorized Service Dealer or the factory, always know the model and serial numbers of your product. These numbers will help the Service Dealer or Service Representative provide exact information about your specific product. You will find the model and serial number decal located in a unique place on the product as shown below.

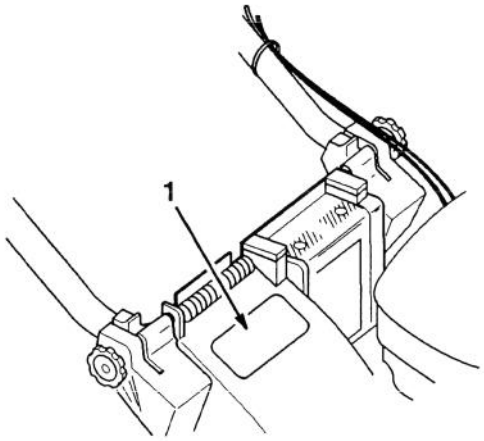

1694

1. Model and Serial Number Decal

For your convenience, write the product model and serial numbers in the space below.

Model No: _____

Serial No. _____

Read this manual carefully to learn how to operate and maintain your product correctly. Reading this manual will help you and others avoid personal injury and damage to the product. Although Toro designs, produces and markets safe, state-of-the-art products, you are responsible for using the product properly and safely. You are also responsible for training persons who you allow to use the product about safe operation.

The Toro warning system in this manual identifies potential hazards and has special safety messages that help you and others avoid personal injury, even death. DANGER, WARNING and CAUTION are signal words used to identify the level of hazard. However, regardless of the hazard, be extremely careful.

DANGER signals an extreme hazard that will cause serious injury or death if the recommended precautions are not followed.

WARNING signals a hazard that may cause serious injury or death if the recommended precautions are not followed.

CAUTION signals a hazard that may cause minor or moderate injury if the recommended precautions are not followed.

Two other words are also used to highlight information. "Important" calls attention to special mechanical information and "Note" emphasizes general information worthy of special attention.

The left and right side of the machine is determined by standing behind the handle in the normal operator's position.

©The Toro Company - 1994
All Rights Reserved

Printed in USA

Contents

	Page
Safety	2
Symbol Glossary	4
Assembly	7
Handle	7
Starter Rope	7
Grass Bag Ramp	8
Before Starting	9
Fill Crankcase With Oil	9
Fill Fuel Tank With Gasoline	10
Operation	11
Controls	11
Starting Engine	11
Stopping Engine	11
Grass Bag	12
Adjusting Cutting Height	13
Maintenance	14
Servicing Air Cleaner	14
Draining Gasoline	14
Changing Crankcase Oil	15
Spark Plug	15
Adjusting Throttle	16
Inspecting/Removing/ Sharpening Blade	16
Lubrication	18
Cleaning Mower Housing	18
Storage	20

Safety

Training

1. Read the instructions carefully. Be familiar with the controls and the proper use of the equipment.
2. Never allow children or people unfamiliar with these instructions to use the lawnmower. Local regulations may restrict the age of the operator.
3. Never mow while people, especially children, or pets are nearby.
4. Keep in mind that the operator or user is responsible for accidents or hazards occurring to other people or their property.

Preparation

1. While mowing, always wear substantial footwear and long trousers. Do not operate the equipment when barefoot or wearing open sandals.
2. Thoroughly inspect the area where the equipment is to be used and remove all objects which may be thrown by the machine.
3. WARNING – Petrol is highly flammable.
    - Store fuel in containers specifically designed for this purpose.
    - Refuel outdoors only and do not smoke while refuelling.
    - Add fuel before starting the engine. Never remove the cap of the fuel tank or add petrol while the engine is running or when the engine is hot.
    - If petrol is spilled, do not attempt to start the engine but move the machine away from the are of spillage and avoid creating any source of ignition until petrol vapors have dissipated.
    - Replace all fuel tanks and container caps securely.
4. Replace faulty silencers.
5. Before using, always visually inspect to see that the blades, blade bolts and cutter assembly are not worn or damaged. Replace worn or damaged blades and bolts in sets to preserve balance.
6. On multi-bladed machines, take care as rotating one blade can cause other blades to rotate.

Operation

1. Do not operate the engine in a confined space where dangerous carbon monoxide fumes can collect.
2. Mow only in daylight or in good artificial light.
3. Avoid operating the equipment in wet grass, where feasible.
4. Always be sure of your footing on slopes.
5. Walk, never run.
6. For wheeled rotary machines, mow across the face of slopes, never up and down.
7. Exercise extreme caution when changing direction on slopes.
8. Do not mow excessively steep slopes.
9. Use extreme caution when reversing or pulling the lawnmower towards you.
10. Stop the blade(s) if the lawnmower has to be tilted for transportation when crossing surfaces other than grass, and when transporting the lawnmower to and from the area to be mowed.

11. Never operate the lawnmower with defective guards or shields, or without safety devices for example deflectors and/or grass catchers in place.

12. Do not change the engine governor settings or overspeed the engine.

13. Disengage all blade and drive clutches before starting the engine.

14. Start the engine or switch on the motor carefully according to instructions and with feet well away from the blade(s).

15. Do not tilt the lawnmower when starting the engine or switching on the motor, except if the lawnmower has to be tilted for starting. In this case, do not tilt it more than absolutely necessary and lift only the part which is away from the operator.

16. Do not start the engine when standing in front of the discharge chute.

17. Do not put hands or feet near or under rotating parts. Keep clear of the discharge opening at all times.

18. Never pick up or carry a lawnmower while the engine is running.

19. Stop the engine and disconnect the spark plug wire.
    - before clearing blockages or unclogging chute;
    - before checking, cleaning or working on the lawnmower;
    - after striking a foreign object. Inspect the lawnmower for damage and make repairs before restarting and operating the lawnmower;
    - if lawnmower starts to vibrate abnormally (check immediately).

20. Stop the engine
    - whenever you leave the lawnmower;
    - before refuelling.

21. Reduce the throttle setting during engine shut down and, if the engine is provided with a shut-off valve, turn the fuel off at the conclusion of mowing.

22. Go slow when using a trailing seat.

Maintenance and storage

1. Keep all nuts, bolts and screws tight to be sure the equipment is in safe working condition.

2. Never store the equipment with petrol in the tank inside a building where fumes may reach an open flame or spark.

3. Allow the engine to cool before storing in any enclosure.

4. To reduce the fire hazard, keep the engine, silencer, battery compartment and petrol storage area free of grass, leaves, or excessive grease.

5. Check the grass catcher frequently for wear or deterioration.

6. Replace worn or damaged parts for safety.

7. If the fuel tank has to be drained, this should be done outdoors.

Sound Emissions

This unit has a maximum airborne noise emission, based on measurement of identical machines.



Vibration Level

This unit has a maximum vibration level of 4.57 m/s2, based on measurement of identical machines.

Symbol Glossary

Safety alert triangle- symbol within triangle indicates a hazard

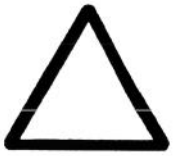

Safety alert symbol



Read operator's manual



Consult technical manual for proper service procedures



Stay a safe distance from the machine

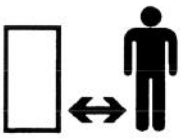

Stay a safe distance from the mower



Thrown or flying objects- Whole body exposure



Thrown or flying objects- Rotary side-mounted mower. Keep deflector shield in place.



Stop engine before leaving operator position



Do not open or remove safety shields while engine is running

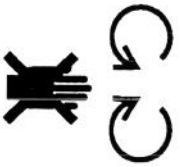

Rotating blade can cut off toes or fingers. Stay clear of mower blade as long as engine is running.



To avoid blade failure when mulching, use blade stiffener when mower is equipped with mulching plug



Transmission



Oil



On/Run

Engage

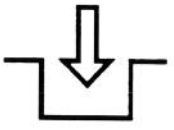

Disengage

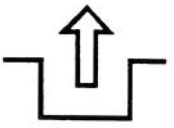

Battery charging condition

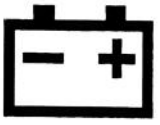

Hourmeter/elapsed operating hours

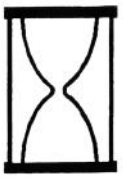

Fast



Slow



Decreasing/increasing



Grease lubrication point



Engine start



Engine stop



Choke



Primer (start aid)



Push primer three times



Fuel



Neutral

N

First gear

1

Second gear

2

Third gear

3

Cutting element– basic symbol



Cutting element– Height adjustment



Pull rope



Wheel



Wheel traction



Properly dispose of batteries



Insert key into ignition switch



Turn key in ignition switch



Move control



Move control forward



Move control rearward

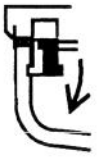

Lower control bar



Raise control bar



Raise/lower control bar



Raise/lower control bar

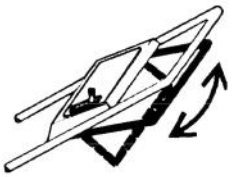

Raise control bar



Raise control bar



Lower control bar



Assembly

Handle

Assembly

1. Loosen knobs on mounting brackets (Fig. 1).

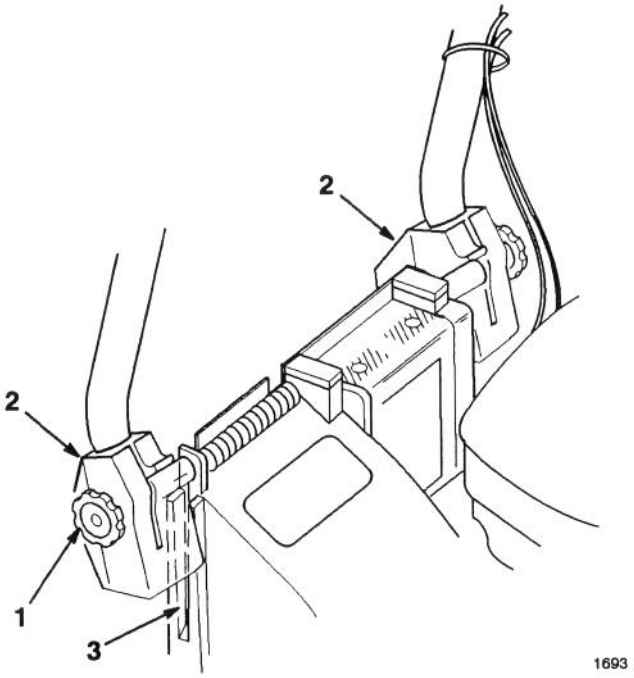

Figure 1

1. Knob
2. Handle bracket
3. Housing pocket

2. Position mounting brackets in a vertical position so that holes face up.

3. Slide handle ends into holes in mounting brackets until handle ends are completely seated in brackets (Fig. 1). Make sure cables are positioned on top of left mounting bracket (Fig. 2).

4. Rotate handle and mounting brackets rearward until brackets fit securely into housing pockets (Fig. 2).

5. Tighten knobs until edges of slots on top of mounting brackets touch.

6. Use cable ties to secure cables to left handle (Fig. 2).

   Note: Make sure cables do not interfere with the raising or lowering of discharge door.

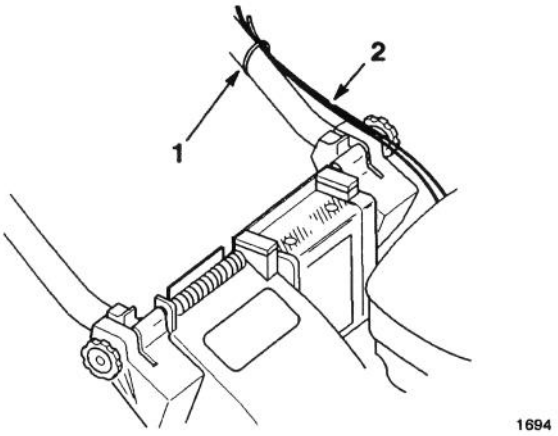

Figure 2

1. Cable tie
2. Cables

Starter Rope

1. Pull starter rope through rope guide on handle (Fig. 3). By squeezing control bar to handle, blade brake will release and allow rope to be pulled up easily to loop.

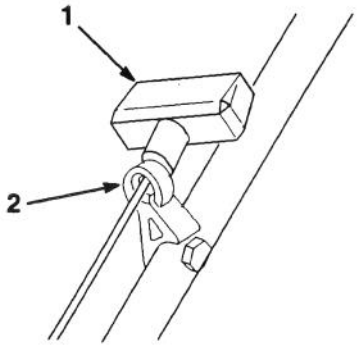

Figure 3

1. Recoil starter
2. Rope guide

Grass Bag Ramp

1. Snap three (3) tabs on grass bag ramp onto grass bag frame (Fig. 4 & 5).

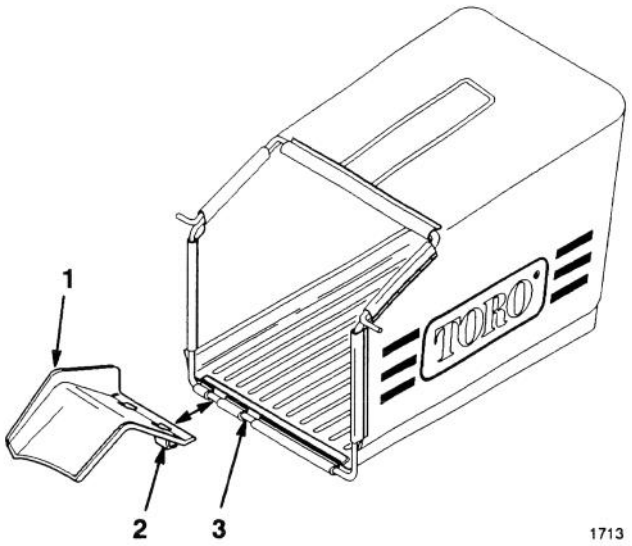

Figure 4

1. Grass bag ramp
2. Tab
3. Grass bag frame

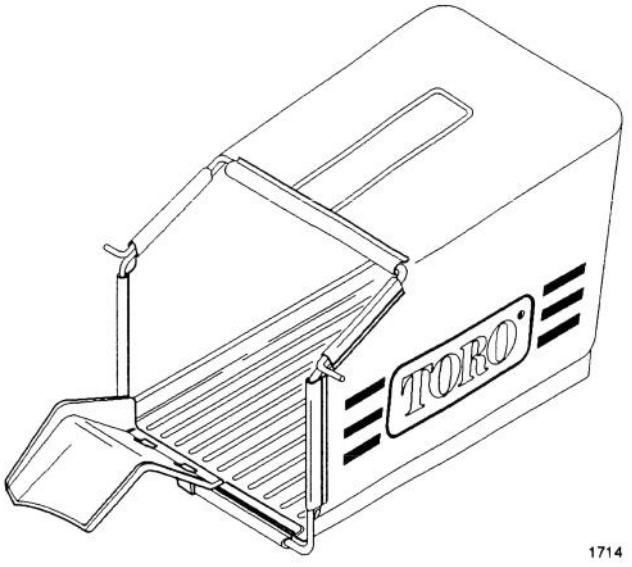

Figure 5

Before Starting

Fill Crankcase With Oil

Initially, crankcase must be filled with 0.6 L (20 ounces) of SAE 30 oil. Use any high quality detergent oil having the American Petroleum Institute (API) "service classification"—SF, SG or SH.

Before each use, assure oil level is between ADD and FULL marks (Fig. 6). Add oil if level is low.

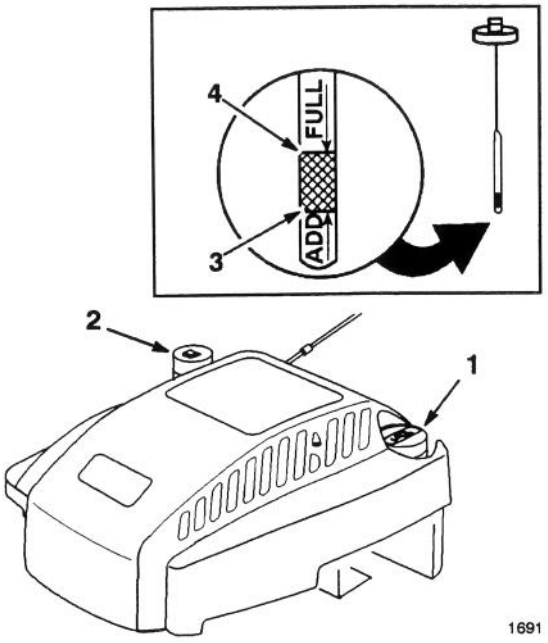

Figure 6

1. Dipstick
2. Fuel tank cap
3. ADD mark
4. FULL mark

1. Position mower on level surface and clean around oil dipstick.

2. Remove dipstick by rotating cap counterclockwise 1/4 turn.

3. Wipe dipstick and insert it into filler neck. Rotate cap 1/4 turn. Then remove dipstick and check level of oil (Fig. 6). If level is low, add only enough oil to raise level to FULL mark on dipstick. **DO NOT FILL ABOVE FULL MARK BECAUSE ENGINE COULD BE DAMAGED WHEN STARTED. POUR OIL SLOWLY.**

   Note: Check oil level each time mower is used or after every 5 hours of mower operation. Initially, change oil after the first 2 hours of operation; thereafter, change oil after every 25 hours of operation. More frequent oil changes are required in dusty or dirty conditions.

4. Insert dipstick into filler neck and rotate cap clockwise 1/4 turn to lock it in place.

Fill Fuel Tank With Gasoline

⚠ DANGER

POTENTIAL HAZARD

- **In certain conditions gasoline is extremely flammable and highly explosive.**

WHAT CAN HAPPEN

- **A fire or explosion from gasoline can burn you, others, and cause property damage.**

HOW TO AVOID THE HAZARD

- **Use a funnel and fill the fuel tank outdoors, in an open area, when the engine is cold. Wipe up any gasoline that spills.**
- **Do not fill the fuel tank completely full. Add gasoline to the fuel tank until the level is 6 mm to 13 mm (1/4" to 1/2") below the bottom of the filler neck. This empty space in the tank allows gasoline to expand.**
- **Never smoke when handling gasoline, and stay away from an open flame or where gasoline fumes may be ignited by a spark.**
- **Store gasoline in an approved container and keep it out of the reach of children.**
- **Never buy more than a 30-day supply of gasoline.**

1. Clean around fuel tank cap and remove cap from tank (Fig. 6). Do not fill tank full. Using unleaded gasoline, fill fuel tank to within 6 to 13 mm (1/4" to 1/2") from top of tank, not into filler neck.

2. Install fuel tank cap and wipe up any spilled gasoline.

Toro also recommends that Toro Stabilizer/Conditioner be used regularly in all Toro gasoline powered products during operation and storage seasons. Toro Stabilizer/Conditioner cleans the engine during operation and prevents gum-like varnish deposits from forming in the engine during periods of storage.

IMPORTANT: Do not mix oil with the gasoline. Never use <u>methanol</u>, gasoline containing <u>methanol</u>, gasohol containing more than 10% ethanol, premium gasoline, or white gas because engine fuel system damage could result.

Do not use fuel additives other than those manufactured for fuel stabilization during storage such as Toro's Stabilizer/Conditioner or a similar product. Toro's Stabilizer/Conditioner is a petroleum distillate based conditioner/stabilizer. Toro does not recommend stabilizers with an alcohol base such as ethanol, methanol or isopropyl. Additives should not be used to try to enhance the power or performance of machine.

Operation

Controls

Throttle, control bar and recoil starter are on upper handle (Fig. 7).

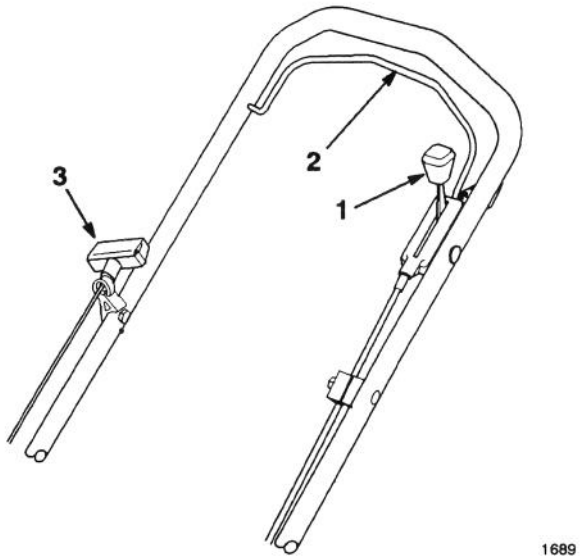

Figure 7

1. Throttle lever
2. Control bar
3. Recoil starter

Starting Engine

1. Push spark plug wire onto spark plug (Fig. 8).
2. Push primer three (3) times (Fig. 8). **Wait about two (2) seconds between each push.**

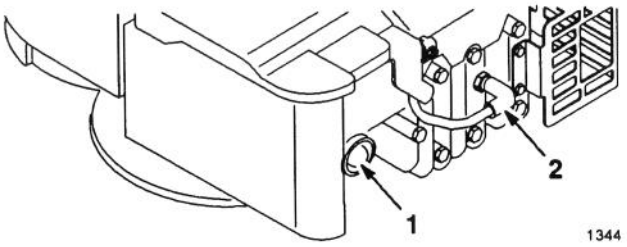

Figure 8

1. Primer
2. Spark plug wire

Note: Do not use primer to restart a warm engine after a short shutdown. However, cool weather may require priming to be repeated.

3. Move throttle forward to (FAST) position.
4. Hold control bar against handle.
5. Pull recoil starter out until slack in rope is taken up. Then pull vigorously to start the engine.
6. When engine starts, regulate throttle as desired between (FAST) and (SLOW).

Stopping Engine

1. Release control bar. Engine and blade will stop. See your dealer immediately if they do not. Stay behind the handle until all moving parts stop.
2. Pull wire off spark plug if mower will be unattended or not used.

To Restart Engine

1. Move throttle lever to (FAST) position and repeat steps 4 and 5 in STARTING ENGINE procedure.
2. If engine does not start after two attempts, repeat steps 2–5 in STARTING ENGINE procedure.

Grass Bag

Installing

1. Stop engine and wait for all parts to stop.

2. Raise discharge door, slide bag ramp attached to bag into discharge opening, and hook bag frame onto mounting bracket (Fig. 9). Allow discharge door to rest on top of bag (Fig. 10).

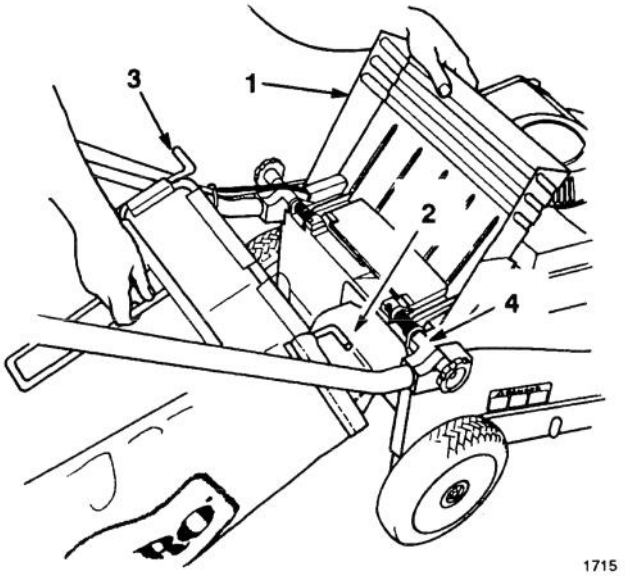

Figure 9

1. Discharge door
2. Bag ramp
3. Bag frame hook
4. Mounting bracket

Removing

1. **Stop engine and wait for all moving parts to stop.** For protection, always keep hands and feet away from mower housing while engine is running. Raise discharge door. While holding discharge door up, grasp handle on grass bag and lift bag off mower. Allow discharge door to close.

   Note: When removing the grass bag, the bag ramp scoops out any clippings that may be plugging the discharge opening. If the discharge opening remains plugged, clear all clippings from the mower with a stick.

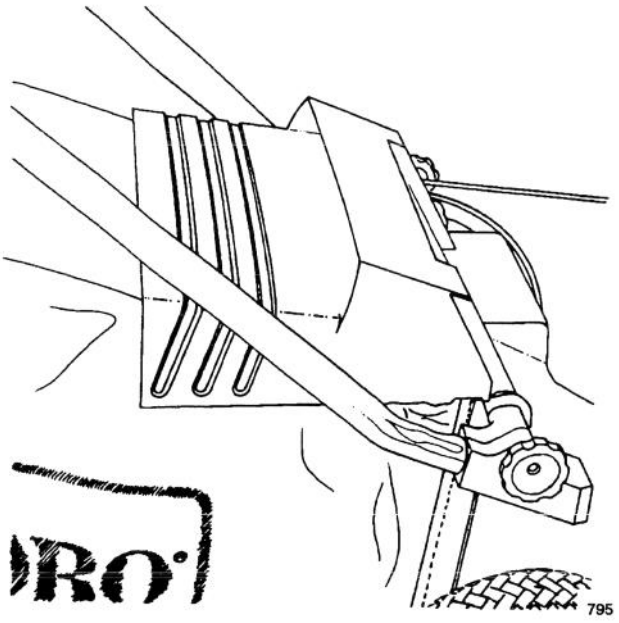

Figure 10

Emptying

1. Grasp bag frame handle and rear of grass bag. Gradually tip bag forward to empty clippings.

Adjusting Cutting Height

The six (6) letters on the belt cover represent the height-of-cut settings. All wheels automatically adjust to the same height-of-cut setting.

1. Stop the engine and pull wire off spark plug (Fig. 8).

2. Use one or two fingers to squeeze the height-of-cut adjustment lever (Fig. 11).

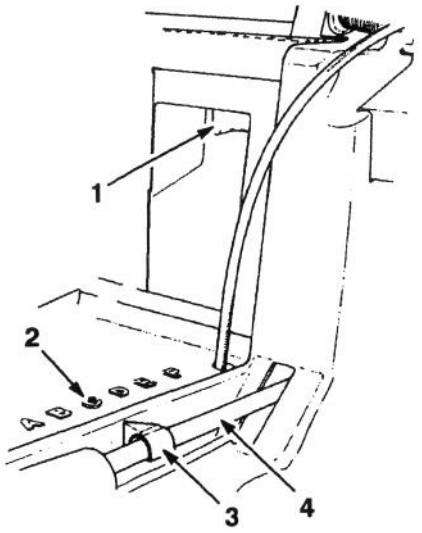

1711

Figure 11

1. Height-of-cut adjustment lever
2. Height settings
3. Pointer
4. Link rod

To raise the wheel height, squeeze the lever to unlock the height-of-cut and pull up on the mower. Release lever when desired height is found. To lower the height, squeeze the height-of-cut adjustment lever and push down on the mower **while rolling the mower forward**. Use the pointer on the link rod to locate the correct setting.

3. Make sure the height adjustment lever is locked into a height setting before beginning operation. The height should not change when the height-of-cut is locked.

Maintenance

⚠ CAUTION

POTENTIAL HAZARD
- **If you leave the wire on the spark plug, someone could start the engine.**

WHAT CAN HAPPEN
- **Accidental starting of engine could seriously injure you or other bystanders.**

HOW TO AVOID THE HAZARD
- **Pull wire off spark plug before you do any maintenance. Also push wire aside so it does not accidentally contact spark plug.**

Servicing Air Cleaner

Normally, replace air cleaner after every 25 operating hours. More frequent replacing is required when mower is operated in dusty or dirty conditions. See your Authorized Toro Service Dealer for replacement parts.

1. Stop engine and pull wire off spark plug (Fig. 12).

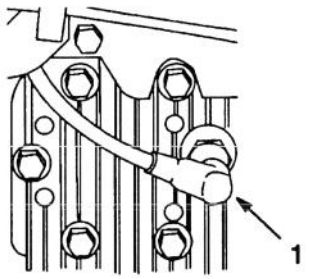

1002

Figure 12

1. Spark plug wire

2. Remove screw securing air cleaner cover to engine (Fig. 13). Tilt cover down and clean cover thoroughly.

3. Remove paper air cleaner filter (Fig. 13) and discard.

4. Insert a new paper air cleaner filter.

5. Reinstall air cleaner cover and secure with screw.

IMPORTANT: Do not operate engine without air cleaner filter otherwise extreme engine wear and damage will likely result.

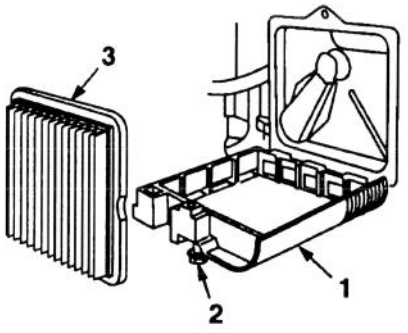

1003

Figure 13

1. Cover
2. Screw
3. Paper filter

Draining Gasoline

1. Stop engine and wait for engine to cool. Pull wire off spark plug (Fig. 12).

   IMPORTANT: Drain gasoline from a cold engine only.

2. Remove cap from fuel tank and use a pump-type syphon to drain fuel into a clean gas can.

   Note: This is the only procedure recommended for draining fuel.

Changing Crankcase Oil

Change oil after the first 2 operating hours and after every 25 hours thereafter. Since warm oil drains better and carries more contaminants than cold, run engine for several minutes or so before draining oil.

1. Stop engine and pull wire off spark plug (Fig. 12).
2. Drain gasoline from fuel tank: refer to Draining Gasoline.
3. Tip mower on its right side (Fig. 14).
4. Place a drain pan under mower.
5. Remove drain plug from underside of mower (Fig. 14).

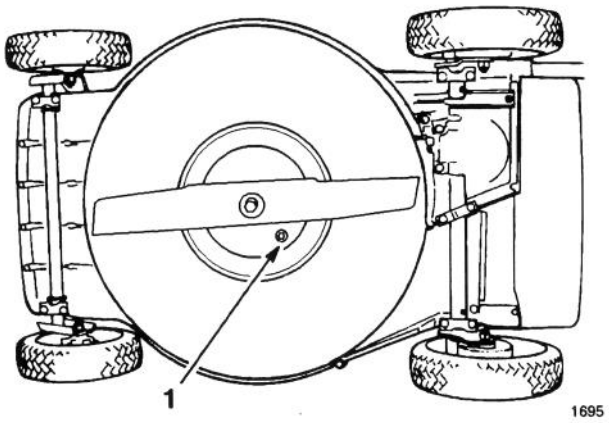

Figure 14

1. Oil drain plug

6. Lower mower allowing oil to drain into pan.
7. After draining, clean drain plug and reinstall it.
8. Set mower upright.
9. Wipe up any spilled oil.
10. Fill engine with fresh oil: refer to Fill Crankcase With Oil.

Spark Plug

Use a Champion RJ19LM spark plug or equivalent. Correct air gap is 0.76 mm (0.030"). Remove plug after every 25 operating hours and check its condition.

1. Stop engine and pull wire off spark plug (Fig. 12).
2. Clean around spark plug and remove plug from cylinder head.

   IMPORTANT: Replace a cracked, fouled, or dirty spark plug. Do not sand blast, scrape, or clean electrodes because engine damage could result from grit entering cylinder.

3. Set air gap at 0.76 mm (0.030") (Fig. 15). Install correctly gapped spark plug and gasket seal. Tighten plug firmly to 20 N·m (15 ft-lb).

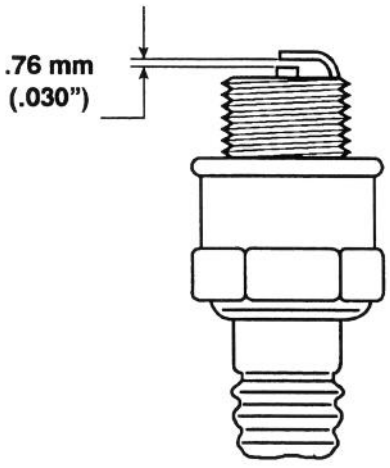

Figure 15

4. Reconnect spark plug wire when maintenance is completed.

Adjusting Throttle

Throttle control adjustment may be required if engine does not start or stop. Whenever a new throttle control cable is installed, throttle must be adjusted.

1. Stop engine and pull wire off spark plug (Fig. 12).
2. Remove (2) screws from engine cover and lift off cover (Fig. 16).

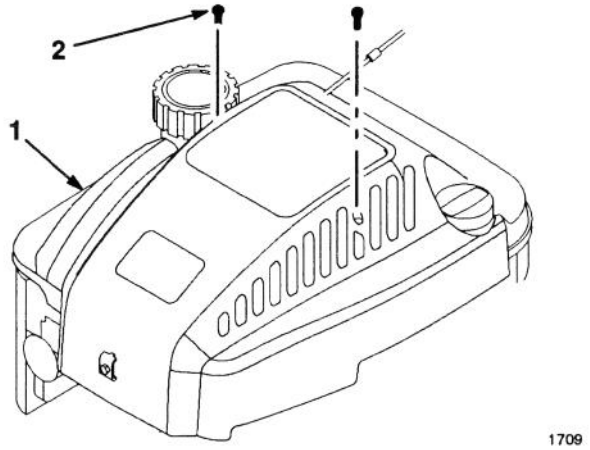

Figure 16

1. Cover 2. Screw (2)

3. Loosen cable clamp screw until throttle cable slides (Fig. 17).

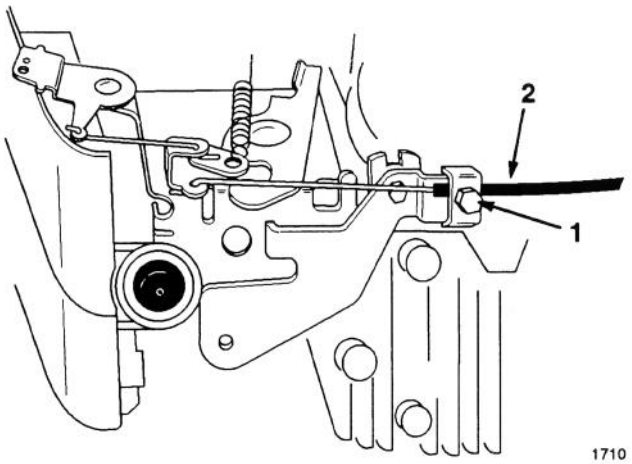

Figure 17

1. Cable clamp screw 2. Throttle cable

4. Move throttle control to 🐇 (FAST) position.
5. Tighten cable clamp screw to lock adjustment in place.
6. Reinstall engine cover with (2) screws. Torque screws to 8-10 in.-lbs. (.9-1.1 N·m)

Inspecting/Removing/ Sharpening Blade

A straight, sharp blade provides maximum cutting performance. Regularly inspect and sharpen blade.

⚠ WARNING

POTENTIAL HAZARD
- **Blade is sharp.**

WHAT CAN HAPPEN
- **Contact with sharp blade can cause serious personal injury.**

HOW TO AVOID THE HAZARD
- **Wear gloves or wrap sharp edges of the blade with a rag.**

1. Stop engine and pull wire off spark plug (Fig. 12).
2. Drain gasoline from fuel tank. See Drain Gasoline section.

⚠ WARNING

POTENTIAL HAZARD
- **Gasoline is extremely flammable, highly explosive and under certain conditions can cause personal injury or property damage.**

WHAT CAN HAPPEN
- **Tipping mower may cause fuel leakage from carburetor or fuel tank.**

HOW TO AVOID THE HAZARD
- **Avoid fuel spills by running engine dry or remove gas with hand pump, never siphon.**

3. Tip mower on its right side (Fig. 18). Avoid rotating the blade because starting problems may result.

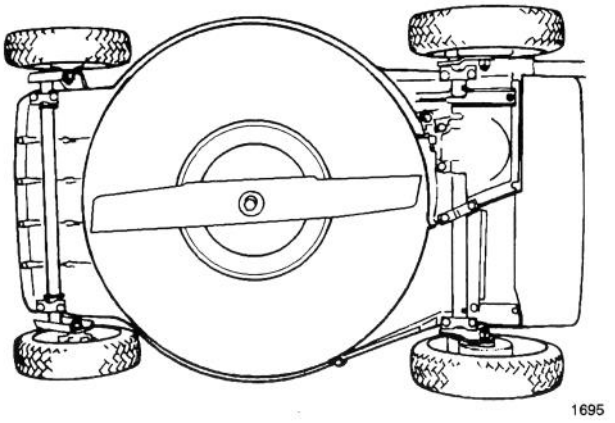

Figure 18

4. INSPECTING BLADE—Carefully examine blade for sharpness and wear, especially where flat and curved parts meet (Fig. 19A). Since sand and abrasive material can wear away the metal that connects the flat and curved parts of the blade, check blade before using the mower. If a slot or wear is noticed, (Fig. 19B & C), replace blade. Refer to step 5.

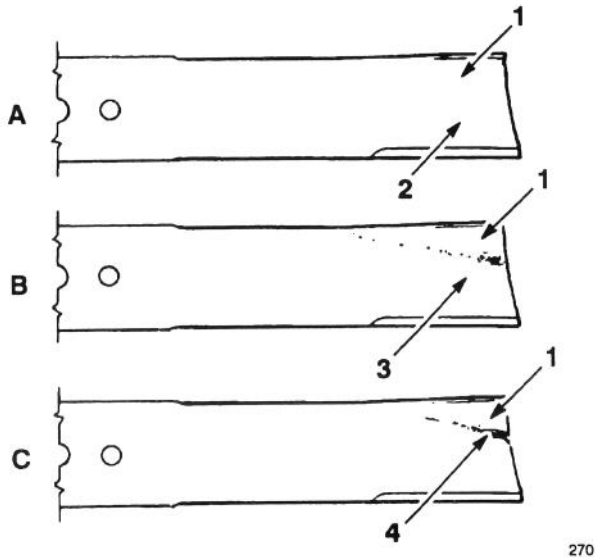

Figure 19

1. Sail
2. Flat part of blade
3. Wear
4. Slot formed

Note: For best performance, install new blade before cutting season begins. During the year, file down small nicks to maintain the cutting edge.

⚠ DANGER

POTENTIAL HAZARD

- **A worn or damaged blade could break and a piece of blade could be thrown into operator's or bystander's area.**

WHAT CAN HAPPEN

- **A thrown piece of blade could cause serious personal injury or death to operator or bystanders.**

HOW TO AVOID THE HAZARD

- **Inspect blade periodically for wear or damage.**
- **Replace a worn or damaged blade.**

5. REMOVING BLADE—Grasp end of blade using a rag or thickly padded glove. Remove blade bolt, washer, retainer, shim, blade, shim and blade retainer (Fig. 20).

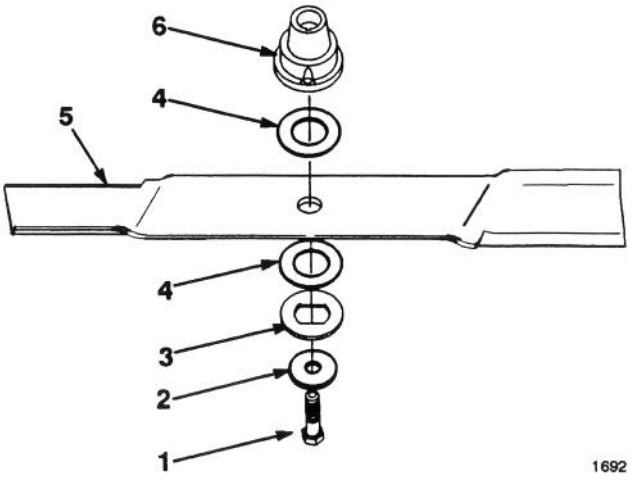

Figure 20

1. Blade bolt
2. Washer
3. Retainer
4. Shim (2)
5. Blade
6. Blade retainer

6. SHARPENING BLADE—Using a file, sharpen top side of blade and maintain original cutting angle (Fig. 21). The blade will remain balanced if same amount of material is removed from both cutting edges.

   IMPORTANT: Check balance of blade by putting it on a blade balancer. An inexpensive balancer can be purchased at a hardware store. A balanced blade stays in a horizontal position and an unbalanced blade settles to the heavy side. If blade is not balanced, file more metal off cutting edge on heavy end of blade.

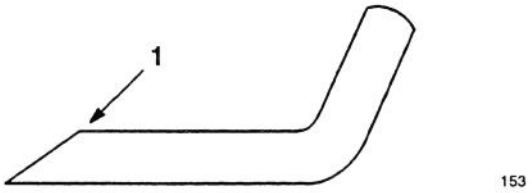

Figure 21

1. Sharpen at this angle only

7. Install blade retainer, shim, a sharp, balanced TORO blade, shim, retainer, washer and blade bolt. Sail part of blade must point toward top of mower housing to ensure correct installation. Tighten the blade bolt to 68 N·m (50 ft-lb).

⚠ WARNING

POTENTIAL HAZARD
- **When sharpening blade, pieces of blade could be accidentally thrown.**

WHAT CAN HAPPEN
- **Thrown objects can cause serious eye injury.**

HOW TO AVOID THE HAZARD
- **Wear proper eye protection when sharpening blade.**

Lubrication

After every 25 operating hours or when season ends, front and rear wheels must be lubricated.

1. Apply one or two drops of light oil on inside and outside of all wheel bolts. Spin wheels to distribute oil into bushings. Wipe up excess oil.

Cleaning Mower Housing

1. Stop engine and pull wire off spark plug (Fig. 12).

2. Drain gasoline from fuel tank: refer to Draining Gasoline section.

⚠ WARNING

POTENTIAL HAZARD
- **Gasoline is extremely flammable, highly explosive and under certain conditions can cause personal injury or property damage.**

WHAT CAN HAPPEN
- **Tipping mower may cause fuel leakage from carburetor or fuel tank.**

HOW TO AVOID THE HAZARD
- **Avoid fuel spills by running engine dry or remove gas with hand pump, never siphon.**

3. Tip mower on its right side (Fig. 22). Avoid rotating blade because starting problems may result.

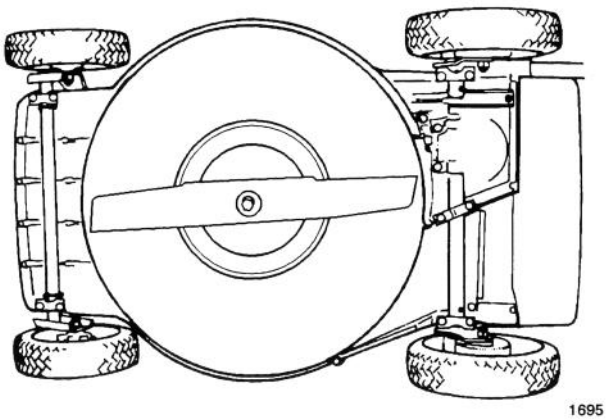

1695

Figure 22

4. Remove dirt and grass clippings that stick to housing by spraying it with a garden hose. Scrape out remaining debris with hardwood scraper. Avoid burrs and sharp edges.

5. Clean discharge door and hinges of grass or debris that may impair operation of door.

6. Turn mower upright.

7. Refill gas tank.

8. Reconnect spark plug wire.

Storage

1. For long term storage, it is recommended that gasoline be drained from fuel tank or use a fuel additive before storing. To drain gasoline, refer to Draining Gasoline. After fuel is drained, start engine and let it idle until all fuel is consumed and engine stops. If gasoline is not drained, gum-like varnish deposits will form and cause poor engine operation or even starting problems.

   Fuel can be left in gas tank only if a fuel additive, such as Toro's Stabilizer/Conditioner, is added to gasoline and run through engine before storing. Toro's Stabilizer/Conditioner is a petroleum distillate based conditioner/stabilizer. Toro does not recommend stabilizers with an alcohol base, such as ethanol, methanol or isopropyl. Use fuel additive in recommended quantities as specified on container.

   Under normal conditions, fuel additives remain effective in fuel for 6-8 months.

2. Drain oil: refer to Changing Crankcase Oil. After oil is drained, do not fill crankcase with oil until the following steps (3-10) are completed.

3. Remove spark plug and pour 30 ml (2 tablespoons) of SAE 30 oil into hole in cylinder. Pull starter rope slowly to coat inside of cylinder. Install spark plug and tighten to 20 N·m (15 ft-lb). **DO NOT INSTALL WIRE ON SPARK PLUG.**

4. Clean mower housing; refer to Cleaning Mower Housing.

5. Check condition of blade; refer to Inspecting/Removing/Sharpening Blade.

6. Tighten all nuts, bolts, and screws.

7. Clean dirt, chaff, grass clippings, and grime from external parts of the engine, shrouding, and top of mower housing.

8. Clean air cleaner; refer to Servicing Air Cleaner.

9. Lubricate the wheels; refer to Lubrication section.

10. Touch up all rusted or chipped paint surfaces. Toro Re-Kote paint is available from an Authorized TORO Service Dealer.

11. Fill crankcase with oil; refer to Fill Crankcase With Oil.

12. Store mower in a clean, dry place. Cover mower to keep it clean and protected.


TORO®