Form No. 3391-800 Rev A

62in Blower Kit

Groundsmaster® 200/3280-D/3320 Series Side Discharge Mowers

Model No. 30506—Serial No. 315000001 and Up

Operator's Manual

Safety

⚠ WARNING

CALIFORNIA
Proposition 65 Warning

This product contains a chemical or chemicals known to the State of California to cause cancer, birth defects, or reproductive harm.

This product complies with all relevant European directives. For details, please see the Declaration of Incorporation (DOI) at the back of this publication.

Improperly using or maintaining the machine can result in injury. To reduce the potential for injury, comply with these safety instructions and always pay attention to the safety alert symbols, which means Caution, Warning, or Danger—personal safety instruction. Failure to comply with the instruction may result in personal injury or death.

Before Operating

- Read and understand the contents of this manual before starting and operating the machine. Become familiar with all controls and know how to stop quickly.
- Never allow children to operate the machine. Do not allow adults to operate the machine without proper instruction. Only trained operators, skilled in slope operation and who have read this manual should operate this machine.
- Never operate machine when under the influence of drugs or alcohol.
- Lightning can cause severe injury or death. If lightning is seen or thunder is heard in the area, do not operate the machine; seek shelter.
- Remove all debris or other objects that might be picked up and thrown by cutter blades. Keep all bystanders away from the operating area.
- Keep all shields and safety devices in place. If a shield, safety device, or decal is defective or damaged, repair or replace it before operating machine. Also, tighten any loose nuts, bolts, and screws to insure machine is in safe operating condition.
- Do not wear loose fitting clothing because it could get caught in moving parts. Always wear long pants and substantial, slip-resistant footwear. Wearing safety glasses, safety shoes, and a helmet is advisable and required by some local ordinances and insurance regulations.
- Be sure interlock switches are adjusted correctly so the engine cannot be started unless the traction pedal is in released-neutral position-and PTO switch is in the disengage position.
- Fill fuel tank before starting the engine. Avoid spilling any fuel. Since fuel is flammable, handle it carefully.
  - Use an approved fuel container.
  - Do not fill fuel tank when engine is hot or running.
  - Do not smoke while handling fuel.
  - Fill fuel tank outdoors and up to about 25 mm (1 inch) from the top of the tank, not the filler neck.
  - Wipe up any spilled fuel.

While Operating

- Sit on the seat when starting the engine and operating the machine.
- Always make sure seat pivot retaining pin is installed.
- Before starting the engine:
  - Engage parking brake.
  - Make sure traction pedal is in neutral and PTO is in disengage position.
  - After engine is started, release parking brake and keep foot off traction pedal. Machine must not move. If movement is evident, the neutral return mechanism is adjusted incorrectly. Shut engine off and adjust until machine does not move when traction pedal is released.
- Do not run the engine in a confined area without adequate ventilation. Exhaust fumes are hazardous and could possibly be deadly.
- Maximum seating capacity is one person. Therefore, never carry passengers.
- Check carefully for overhead clearances before driving under any objects.
- The grass deflector or complete blower assembly must always be installed on cutting unit.
- Operator must be skilled and trained in how to drive on hillsides. Failure to use caution on slopes or hills may

© 2015—The Toro® Company
8111 Lyndale Avenue South
Bloomington, MN 55420

Register at www.Toro.com.

CE

Original Instructions (EN)
Printed in the USA.
All Rights Reserved

3391-800 A

cause loss of control and vehicle to tip or roll, possibly resulting in personal injury or death.

- Traverse slopes carefully. Do not start or stop suddenly when traversing slopes or when traveling uphill or downhill.
- If engine stalls or machine loses headway and cannot make it to the top of a slope, do not turn machine around. Always back slowly straight down the slope.
- Using the machine demands the operator's complete attention. To prevent loss of control:
  - Operate only in daylight or when there is good artificial light.
  - Drive slowly.
  - Avoid sudden starts and stops.
  - Look behind machine before backing up.
  - Watch for holes or other hidden hazards.
  - Do not drive close to a sand trap, ditch, creek, or hazard.
  - Reduce speed when making sharp turns and when turning on a hillside.
  - The cutting deck must be lowered when going down slopes for steering control.
- The grass deflector must always be installed and in lowest position on the cutting unit when blower assembly is removed. This product is designed to drive objects into the ground where they lose energy quickly in grassy areas. However, don't take an injury risk! When a person or pet appears unexpectedly in or near the mowing area, **stop mowing**. Careless operation, combined with terrain angles, ricochets, or improperly positioned guards, can lead to thrown object injuries. Do not resume mowing until area is cleared.
- Never raise the cutting unit while the blades or other parts are rotating.
- If cutting blades strike a solid object or the machine vibrates abnormally, disengage PTO, move throttle to SLOW, set parking brake, and shut engine off. Remove key from switch to prevent possibility of accidental starting. Check cutting unit, blower assembly and traction unit for damage and defective parts. Repair any damage before restarting the engine and operating the cutting unit. Assure cutting unit blades are in good condition and blade bolts are tightened to proper torque specifications (See Cutting Deck Operator's Manual).
- If the cutting unit discharge area or blower assembly ever plugs, disengage PTO and shut engine off before removing the obstruction.
- To stop machine, remove foot from the traction pedal. Gradually reversing the traction pedal can provide additional braking.
- Do not touch engine, muffler, or it adjacent shroud while engine is running or soon after it has stopped. These areas could be hot enough to cause a burn.
- Lower the cutting unit to the ground and remove key from switch whenever machine is left unattended.
- Before getting of the seat:
  - Move traction pedal to neutral position and remove foot from pedal.
  - Set the parking brake and disengage the PTO.
  - Shut the engine off and remove key from ignition switch. Wait for all movement to stop before getting off the seat.

Maintenance

- Remove key from ignition switch to prevent accidental starting of the engine when servicing, adjusting, or storing the machine.
- If major repairs are ever needed or assistance is desired, contact an Authorized Toro Distributor.
- To reduce potential fire hazard, keep the engine free of excessive grease, grass, leaves, and accumulations of dirt.
- Make sure machine is in safe operating condition by keeping nuts, bolts, and screws tight. Check all cutting unit blade mounting bolts frequently to assure they are tightened to proper torque specifications (See the *Cutting Deck Operator's Manual*).
- Make sure all hydraulic line connectors are tight, and all hydraulic hoses and lines are in good condition before applying pressure to the system.
- Keep body and hands away from pin hole leaks or nozzles that eject hydraulic fluid under high pressure. Use paper or cardboard, not hands, to search for leaks. Hydraulic fluid escaping under pressure can have sufficient force to penetrate skin and cause serious injury. If fluid is ejected into the skin, it must be surgically removed within a few hours by a doctor familiar with this form of injury or gangrene may result.
- Before disconnecting or performing any work on the hydraulic system, all pressure in system must be relieved by stopping engine and lowering implement to the ground.
- If the engine must be running to perform maintenance or an adjustment, keep clear of PTO shaft, cutting unit blades, and other moving parts.
- At the time of manufacture, the machine conformed to safety standards in effect for riding mowers. To ensure optimum performance and continued safety certification of the machine, use genuine TORO replacement parts and accessories. Replacement parts and accessories made by other manufacturers may result in non-conformance with the safety standards, and the warranty may be voided.

Safety and Instructional Decals

Safety decals and instructions are easily visible to the operator and are located near any area of potential danger. Replace any decal that is damaged or lost.

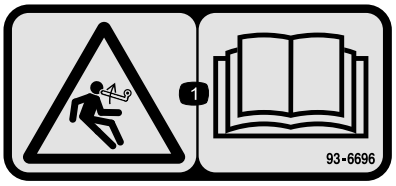

93–6696

1. Stored energy hazard—read the *Operator's Manual*.



93–7301

1. Warning-read the *Operator's Manual.*
2. Thrown object hazard-stay away from moving parts; keep all guards and shields in place.

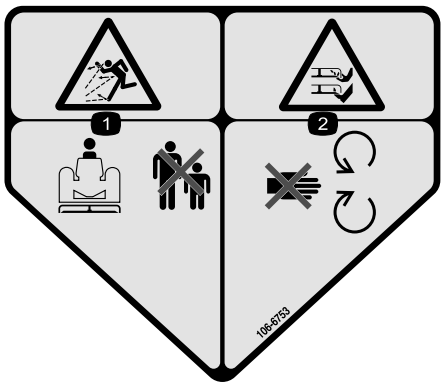

106-6753

1. Thrown object hazard—keep bystanders a safe distance from the machine.
2. Cutting/dismemberment hazard of hand or foot, mower blade—stay away from moving parts.

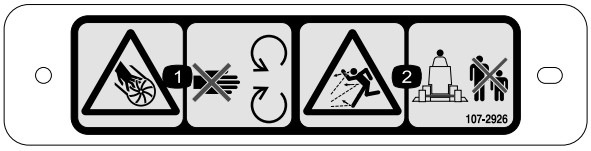

107-2926

1. Cutting/dismemberment hazard, impeller—stay away from moving parts.
2. Thrown object hazard—keep bystanders a safe distance from the machine.

Setup

Loose Parts

Use the chart below to verify that all parts have been shipped.

Procedure	Description	Qty.	Use
1	No parts required	–	Remove the cutting unit from traction unit.
2	Double pulley Pulley nut Nut cover	1 1 1	Install the new spindle pulley.
3	Blade	3	Install the new blades.
4	Pivot brackets	2	Remove and modify the grass deflector.

Procedure	Description	Qty.	Use
5	Blower assembly with mounting brackets Capscrew, 5/16 x 1 inch Locknut, 5/16 Carriage bolt, 3/8 inch x 3/4 inch Flange nut, 3/8 inch	1 3 4 4 3	Install the blower mounting brackets.
6	Front deflector Rear deflector Rear shelf Left shelf Right shelf Capscrew, 5/16 x 5/8 inch Locknut, 5/16 inch Capscrew, 3/8 x 1 inch Lockwasher, 3/8 inch Capscrew, 1/4 x 1 inch Capscrew, 1/4 x 3/4 inch Locknut, 1/4 inch	1 1 1 1 1 6 6 4 4 3 3 6	Install the deck deflectors.
7	Deflector stop Capscrew, 1/4 x 3/4 inch Locknut, 1/4 inch	1 2 2	Mount the new deflector stop.
8	Idler arm assembly Pivot screw Bushing Washer Locknut, 3/8 inch Spring Threaded rod Flangenut, 5/16 inch Spring bracket Capscrew, 1/4 x 1 inch Locknut, 1/4 inch	1 1 1 2 1 1 1 2 1 2 2	Mount the idler assembly.
9	Belt	1	Mount the blower.
10	Bumper Capscrew, 5/16 x 3 inch Locknut, 5/16 inch	1 4 4	Install bumper
11	Trim molding Deck cover	1 1	Install the new deck cover.
12	Belt guard Pulley guard	1 1	Install the new safety guards.
13	Counterbalance spring	1	Install the new counterbalance spring.
14	No parts required	–	Install the cutting unit to the traction unit.
15	Decal, danger	1	Install the new decal.
16	Chute assembly	1	Mount the blower housing chute.

Media and Additional Parts

Description	Qty.	Use
Installation instructions	1	Read before installation
Parts catalog	1	Use to reference part numbers
Certificate of compliance	1	CE certification

1

Removing the Cutting Unit from the Traction Unit

No Parts Required

Procedure

1. Position the machine on a level surface, raise the cutting unit, engage the parking brake, ensure that the traction pedal is in the neutral position and the PTO lever in the Off position, stop the engine, and remove the key from the switch.

⚠ CAUTION

The counterbalance spring is in tension when the deck is in the lower position (200 series traction units only).

Always raise the deck before adjusting or removing the spring.

2. On 200 series traction units only, disconnect the counterbalance from the traction unit, remove the lock pins from the brackets, separate the spring tension assemblies from the brackets, and lay them down on the deck. Loosely secure the lock pins to the brackets to prevent losing them (Figure 1).

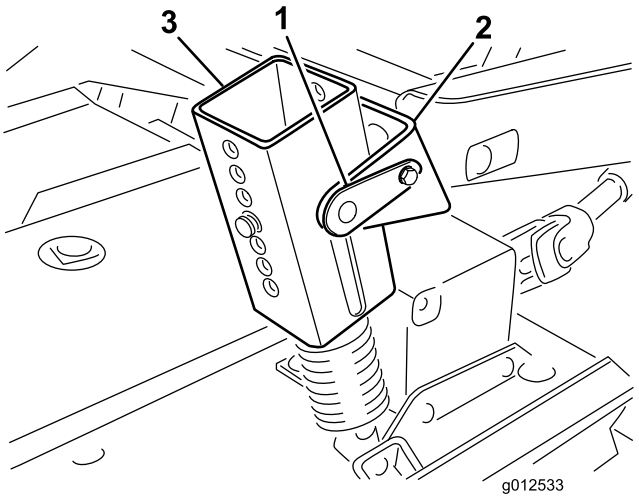

Figure 1

1. Lock pin
2. Bracket
3. Spring tension assembly

3. Lower the cutting unit and remove the 4 bolts and nuts securing lift arm brackets to castor arms (Figure 2).

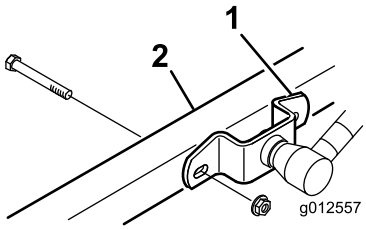

Figure 2

1. Lift arm bracket
2. Right castor arm

4. Start the engine and raise the traction unit lift arms.
5. Stop the engine and slide the cutting unit away from the traction unit, separating the male and female sections of PTO shaft (Figure 3).

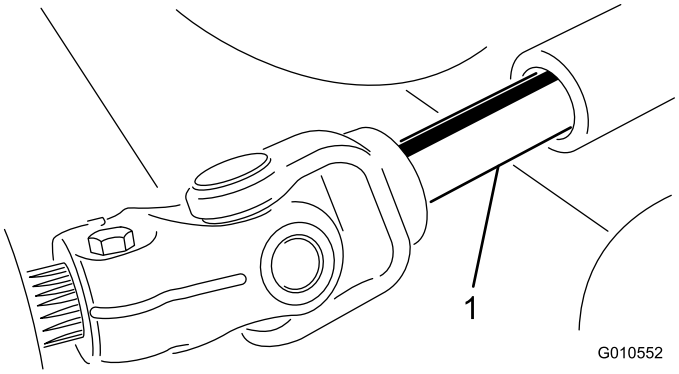

Figure 3

1. PTO shaft

⚠ CAUTION

If the engine is started and the PTO shaft is allowed to rotate, serious injury could result.

Do not start the engine and engage the PTO lever when the PTO shaft is not connected to the gear box on the cutting unit.

2

Installing the New Spindle Pulley

Parts needed for this procedure:

1	Double pulley
1	Pulley nut
1	Nut cover

Procedure

1. Unhook the latches securing the right cover to the top of the cutting unit. Remove the cover from the cutting unit.
2. Loosen the 2 nuts securing the idler plate so the tension of the idler pulley against the belt is released (Figure 4).

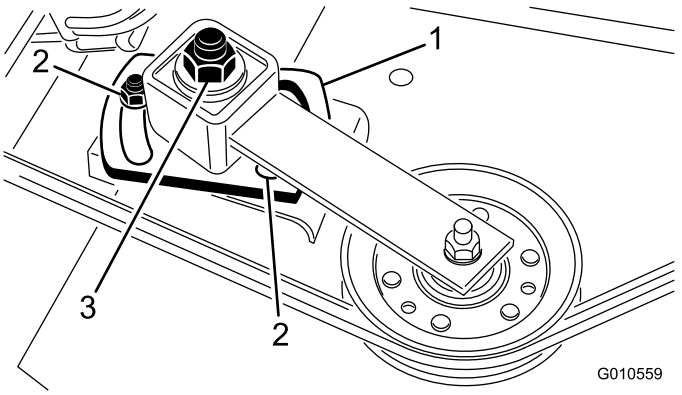

Figure 4

1. Idler plate
2. Nut (2)
3. Idler adjusting nut

3. Remove the belt from the right spindle pulley (Figure 4).
4. Remove the six carriage bolts and flange nuts securing the spindle housing assembly to the cutting unit (Figure 5). Slide the spindle housing assembly out of the bottom of the cutting unit.
5. Remove the nut and washer retaining the pulley on the spindle shaft. Remove the pulley from the shaft.
6. Slide the new double spindle pulley onto the spindle shaft. Do not install the pulley nut at this time.
7. Slide the pulley end of spindle housing assembly through the hole in the cutting unit, and loop the belt around the pulley and idler. Mount the spindle assembly in place with 6 carriage bolts and flange nuts.

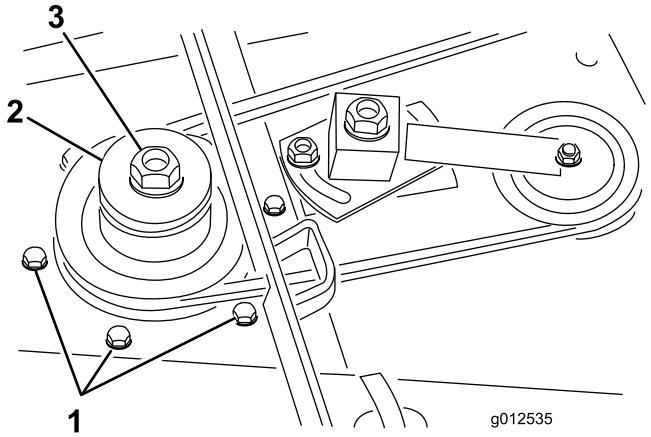

Figure 5

1. Carriage bolts
2. Double spindle pulley
3. Pulley nut

8. Install the original washer and new pulley nut onto the spindle shaft and tighten it to 100 ft-lb (135.5 N-m). Install the nut cover.
9. Adjust (tighten) the idler adjusting nut to 35 to 40 ft-lb (48 to 54 N-m) to achieve the proper belt tension. Tighten the idler plate nuts.

3

Installing the New Blades

Parts needed for this procedure:

3	Blade

Procedure

1. Grasp the end of blade using a thickly padded glove. Remove the blade bolt, anti-scalp cup, and blade from the spindle shaft (Figure 6).

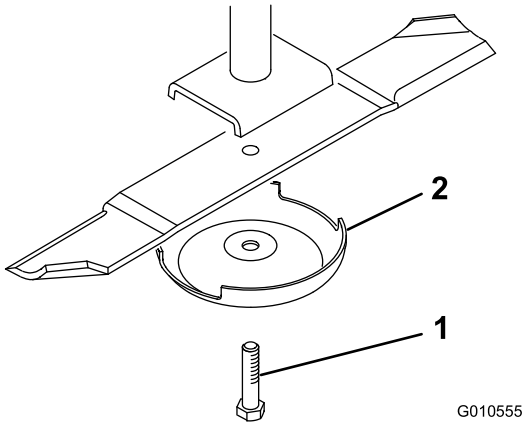

Figure 6

1. Blade bolt
2. Anti-scalp cup

2. In sequence, install a new blade (sail facing toward the cutting unit) and anti-scalp cup. Secure the parts in place with the blade bolt. Tighten the blade bolt to 85 to 110 ft-lb (115 to 149 N-m).
3. Repeat this procedure on all blades.

4

Removing and Modifying the Grass Deflector

Parts needed for this procedure:

2	Pivot brackets

Procedure

1. Remove the bolts, locknuts, and springs securing the deflector mounts to the pivot brackets (Figure 7). Remove the deflector.
2. Remove the carriage bolts and flange nuts securing the pivot brackets to the housing (Figure 7). Remove the pivot brackets. Retain the fasteners for future use.
3. Remove the 2 carriage bolts, flat washers, and locknuts securing the reinforcement plate to the under side of the housing and the stiffener plate to the top of the housing (Figure 7).

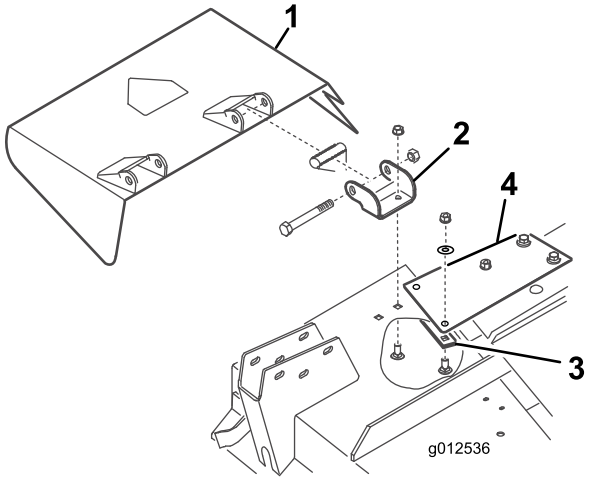

Figure 7

1. Grass deflector
2. Pivot brackets
3. Reinforcement plate
4. Stiffener plate

4. Using the bolts, locknuts, and springs previously removed, install the new pivot brackets to the deflector mounts (Figure 8). Do not over tighten the nuts because the brackets must be allowed to pivot. Save this assembly for side discharge operation.

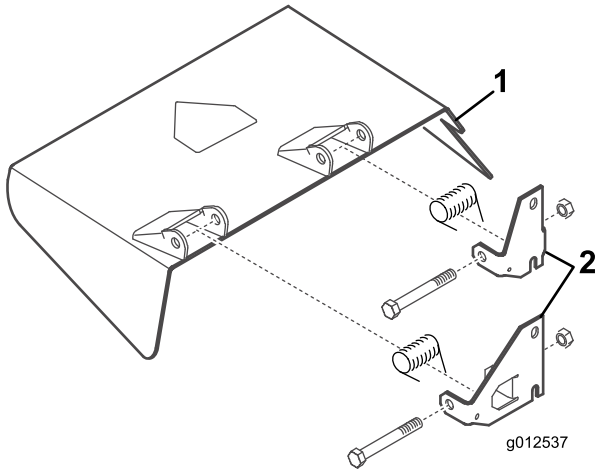

Figure 8

1. Grass deflector
2. Pivot brackets

5

Installing the Blower Mounting Brackets

Parts needed for this procedure:

1	Blower assembly with mounting brackets
3	Capscrew, 5/16 x 1 inch
4	Locknut, 5/16
4	Carriage bolt, 3/8 inch x 3/4 inch
3	Flange nut, 3/8 inch

Procedure

1. Remove the fasteners securing the right hand deck cover spring latch to the right side of the cutting deck (Figure 9). Remove and retain the latch for future use with the right hand cover.
2. Position the blower and mounting brackets on the deck, aligning the mounting holes with the holes previously used for mounting the grass deflector. Figure 9 is shown with the blower removed from the brackets. Make sure there is no gap between the blower and cutting deck.

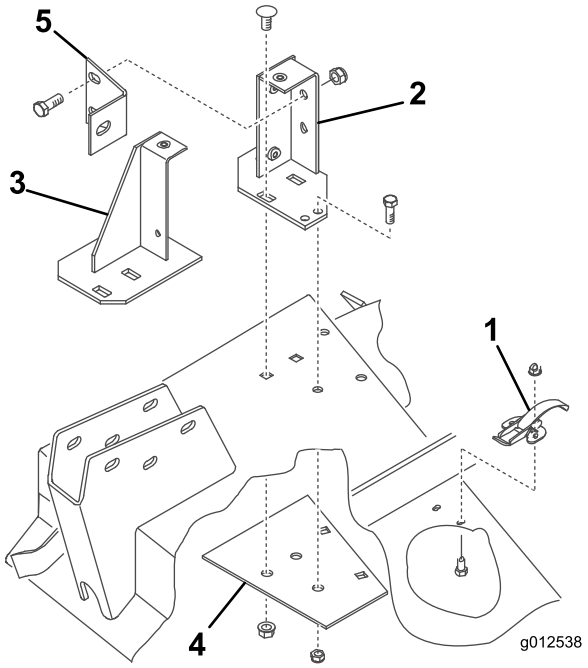

Figure 9

1. Spring latch
2. Rear mounting bracket
3. Front mounting bracket
4. Reinforcement plate
5. Blower brace

3. Position the new reinforcement plate under the deck aligning the mounting holes with the holes previously used for mounting the grass deflector (Figure 9).
4. Mount the front and rear brackets and reinforcement plate to the deck with 2 previously removed carriage bolts (3/8 -16 x 7/8 inch) and flange nuts each (Figure 9). The bolt heads must be on top of the deck.
5. Remove the 2 knobs securing the blower to the mounting brackets. Remove the blower.
6. Using each bracket as a template, mark the location and drill 2 additional 11/32 inch diameter holes. (2 holes for the rear bracket and 1 for the front bracket. Use the reinforcement plate for a template to drill one of the 11/32 inch diameter holes for the rear bracket.

   Note: Use caution when drilling the holes so that the castor arm is not damaged.
7. Secure the brackets and reinforcement plate to the deck with bolts (5/16-18 x 3/4 inch) and locknuts (Figure 9). The bolt heads must be on top of the deck.
8. Mount the blower brace to the rear mounting bracket with 2 bolts (3/8-16 x 1 inch) and locknuts (Figure 9) and to the castor arm with a bolt (3/8-16 x 1 inch).
9. When mounting the lift arm brackets to the castor arms, mount other side of the blower brace to the lift arm bracket and the right castor arm with the bolt and nut previously removed.

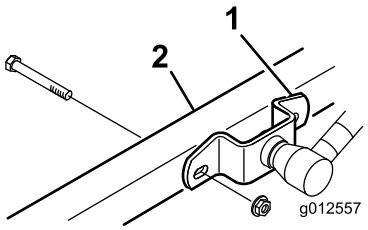

Figure 10

1. Lift arm bracket
2. Right castor arm

6

Installing the Deck Deflectors

Parts needed for this procedure:

1	Front deflector
1	Rear deflector
1	Rear shelf
1	Left shelf
1	Right shelf
6	Capscrew, 5/16 x 5/8 inch
6	Locknut, 5/16 inch
4	Capscrew, 3/8 x 1 inch
4	Lockwasher, 3/8 inch
3	Capscrew, 1/4 x 1 inch
3	Capscrew, 1/4 x 3/4 inch
6	Locknut, 1/4 inch

Procedure

1. Insert the front deflector into the deck, aligning the end of the deflector with the edge of the discharge opening (Figure 11 and Figure 12).

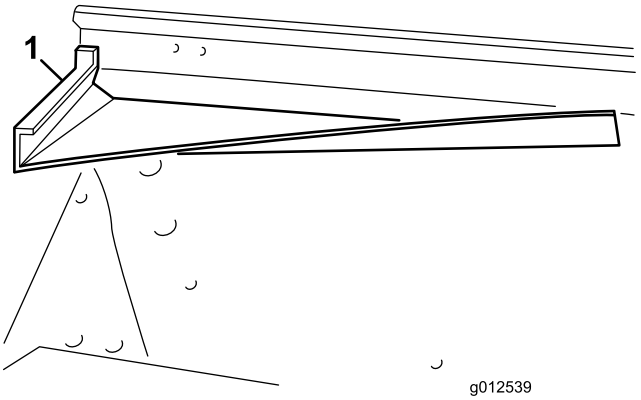

Figure 11

1. Front deflector

2. Using the deflector as a template, mark and drill three 11/32 inch diameter holes through front and top of deck.
3. Secure the 2 front mounting tabs of deflector to the deck with bolts (5/16-18 x 5/8 inch) and locknuts (5/16-18 inch).
4. Secure the front right corner of the front mounting bracket and the top tab of the deflector to the deck with a bolt (5/16-18 x 1 inch) and locknut.

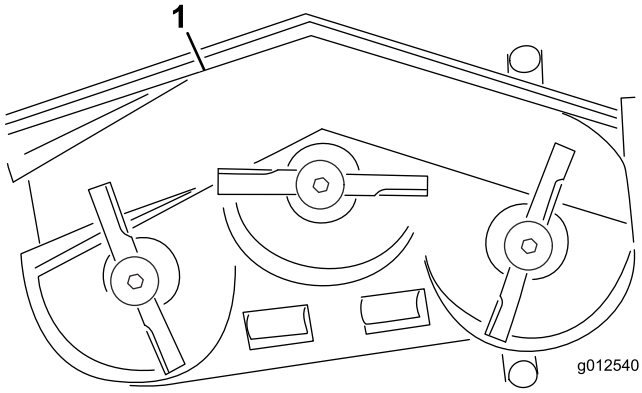

Figure 12

1. Front deflector
2. Rear deflector
3. Rear shelf
4. Left shelf
5. Right shelf

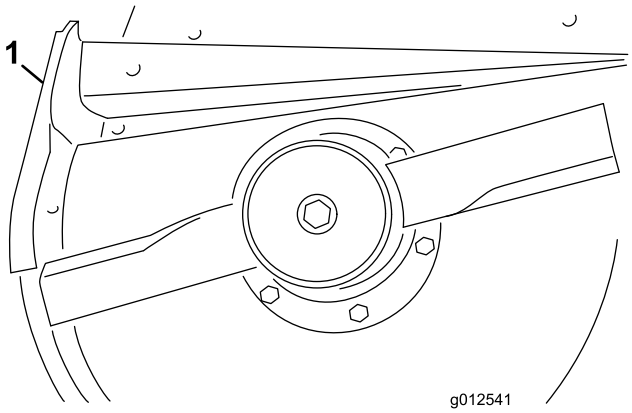

Figure 13

1. Rear deflector

5. Using the deflector as a template, mark and drill three 11/32 inch diameter holes through the deck.
6. Secure the deflector to the deck with 3 bolts (5/16-18 x 5/8 inch) and locknuts (5/16-18 inch).
7. Before mounting the left and right shelves to the deck, you must grind the welds off of the bottom edge of the deck. Paint the deck after grinding.
8. Using the existing holes, mount the rear shelf to the deck with 4 bolts (3/8-16 x 1 inch) and lock washers (3/8 inch) (Figure 14).

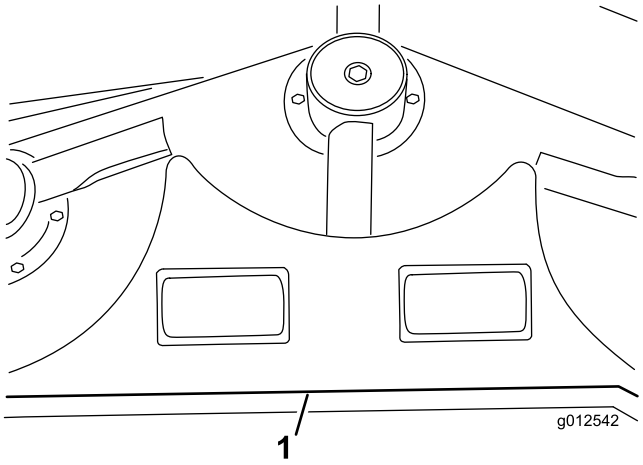

Figure 14

1. Rear shelf

9. Align the left shelf with the left end of the rear shelf and the edge of the deck (Figure 12 and Figure 14).
10. Secure the left shelf to the deck with 2 bolts (1/4-20 x 1 inch), 1 bolt (1/4-20 x 3/4 inch), and 3 locknuts (Figure 15). Position the bolt heads to the inside of the deck.

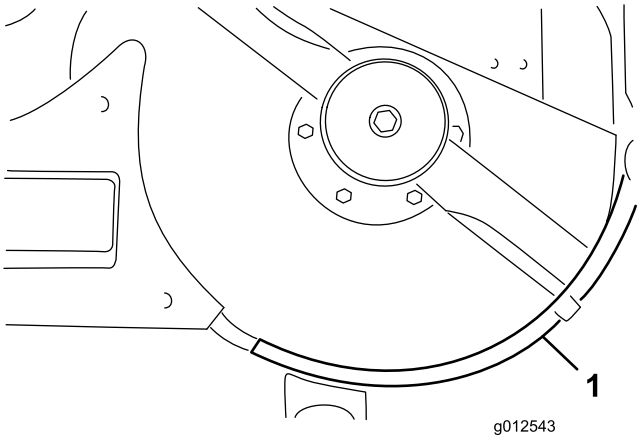

Figure 15

1. Left shelf

11. Align the right shelf with the right end of the rear shelf and the edge of the deck (Figure 12 and Figure 16). Using the left shelf as a template, locate, mark, and drill three 9/32 inch diameter holes in the deck.

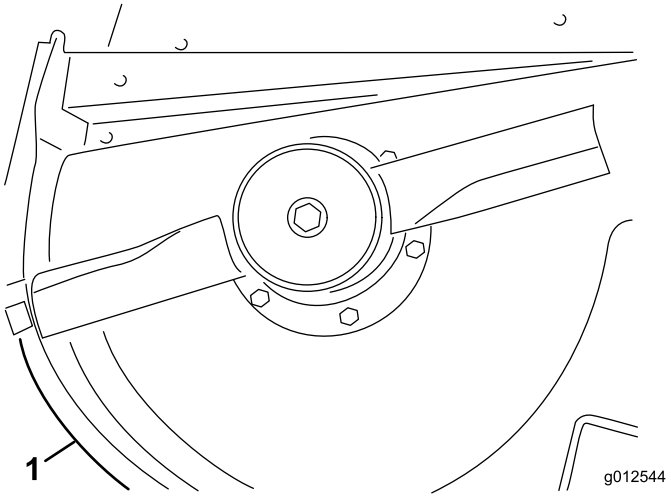

Figure 16

1. Right shelf

12. Secure the right shelf to the deck with 1 bolt (1/4-20 x 1 inch), 2 bolts (1/4-20 x 3/4 inch), and 3 locknuts. Position the bolt heads to the inside of the deck.

7

Mounting the New Deflector Stop

Parts needed for this procedure:

1	Deflector stop
2	Capscrew, 1/4 x 3/4 inch
2	Locknut, 1/4 inch

Procedure

1. Using the new deflector stop as a template, set it on the original flat deflector stop (Figure 17). Ensure that the new deflector stop is flush at the bottom, contacting the side of the deck, and parallel with the outside edge of the deflector support.

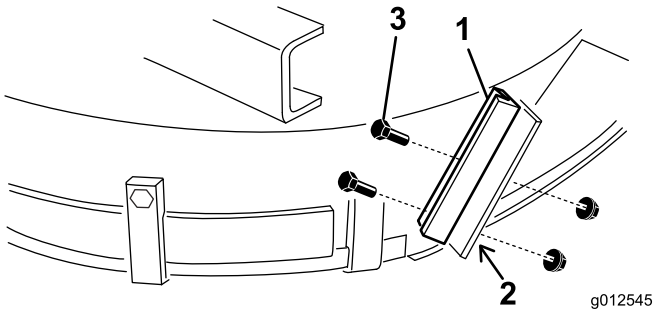

Figure 17

1. New deflector stop
2. Mark and drill holes
3. Bolts and locknuts

2. Locate, mark and drill two 9/32 inch diameter holes through the old deflector support.
3. Mount the new deflector support to the old deflector stop with 2 bolts (1/4-20 x 3/4 inch) and locknuts (1/4-20 inch), as shown in Figure 17.

8

Mounting the Idler Assembly

Parts needed for this procedure:

1	Idler arm assembly
1	Pivot screw
1	Bushing
2	Washer
1	Locknut, 3/8 inch
1	Spring
1	Threaded rod
2	Flangenut, 5/16 inch
1	Spring bracket
2	Capscrew, 1/4 x 1 inch
2	Locknut, 1/4 inch

Procedure

1. Using the dimensions shown in Figure 18, locate, mark, and drill a 13/32 inch diameter hole in the deck. The dimensions shown are from the right front corner of the deck and from the edge of the discharge opening. The blower brackets are removed for clarity.

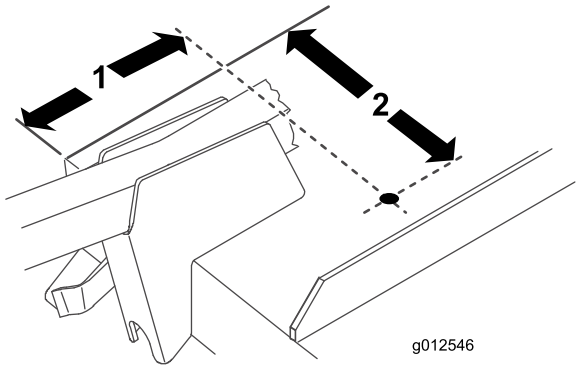

Figure 18

1. 6-13/16 inches
2. 9-1/8 inches

2. Using the dimensions shown in Figure 19, locate, mark, and drill a 13/16 inch diameter hole and two 13/32 inch diameter holes in the right bridge bar.

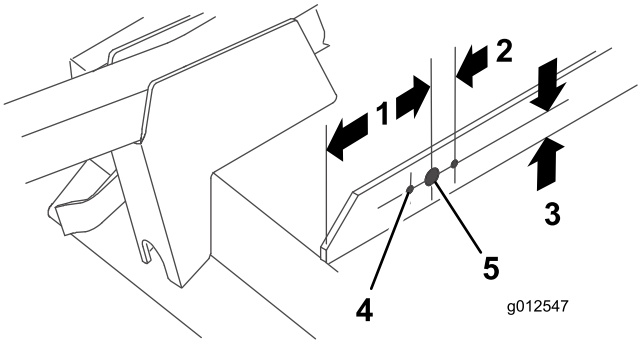

Figure 19

1. 5 inches
2. 1-1/16 inches (2)
3. 1 inch
4. 13/32 inch diameter (2)
5. 13/16 inch diameter

3. Thread a flange nut (5/16-18 inch) approximately 2 inches (5 cm) onto the threaded rod (Figure 20).

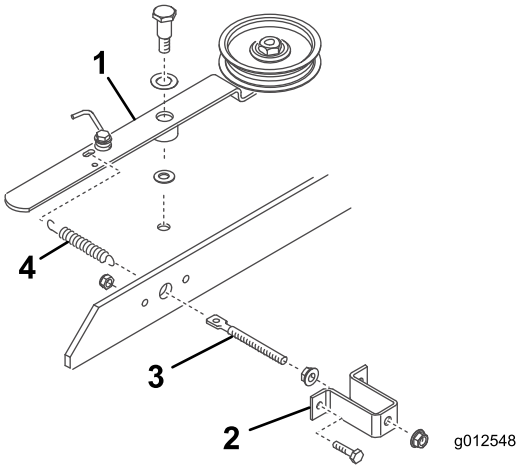

Figure 20

1. Idler pulley arm
2. Spring bracket
3. Threaded rod
4. Spring

4. Insert the end of the threaded rod through the large hole in the spring bracket and loosely secure it with another flange nut (5/16-18 inch) (Figure 20). Do not tighten the flange nuts.
5. Insert the other end of the threaded rod through the hole in the bridge bar and secure the spring bracket to the bridge with 2 bolts and locknuts (Figure 20).
6. Hook the short loop of the spring into the hole in the threaded rod and the long loop in the hole in the idler arm (Figure 20).
7. Mount the idler pulley arm to the deck with the following parts, in this order: a pivot screw (3/8-16 inch), a thrust washer (1/2 inch), the idler arm, a thrust washer (3/8 inch), the deck, and a locknut (3/8-16 inch) (Figure 20). (Do not tighten the flange nuts on the threaded rod at this time. Adjust the spring tension after the blower assembly and belt have been installed.)

9

Mounting the Blower

Parts needed for this procedure:

1	Belt

Procedure

1. Route the belt around the small deck spindle pulley.
2. Slide the blower onto the mounting bracket alignment studs (Figure 21) while routing the belt around the blower pulley.

   Note: If the blower does not easily slide onto the mounting brackets, loosen the alignment bolts slightly.

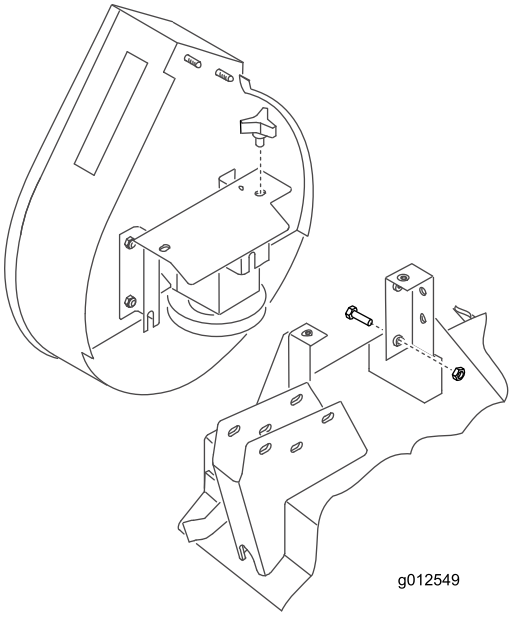

Figure 21

3. Secure the blower to the brackets with 2 knobs.
4. Adjust the spring length to 4-7/8 inches (12.4 cm) for proper belt tension by adjusting the flange nuts on the threaded rod.

10

Install the Bumper

Parts needed for this procedure:

1	Bumper
4	Capscrew, 5/16 x 3 inch
4	Locknut, 5/16 inch

Procedure

1. Using dimensions shown in Figure 22, locate, mark and drill a 11/32 inch diameter hole through both walls of the right front castor arm bracket.

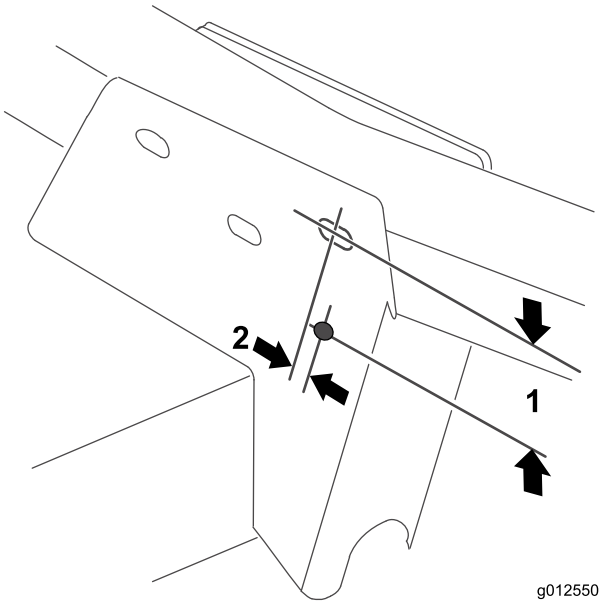

Figure 22

1. 2-1/2 inches
2. 3/8 inch

2. Secure the top mounting hole of the front mounting plate of the bumper to the castor arm bracket with a bolt (5/16 -18 x 3 inch) and locknut (Figure 23).

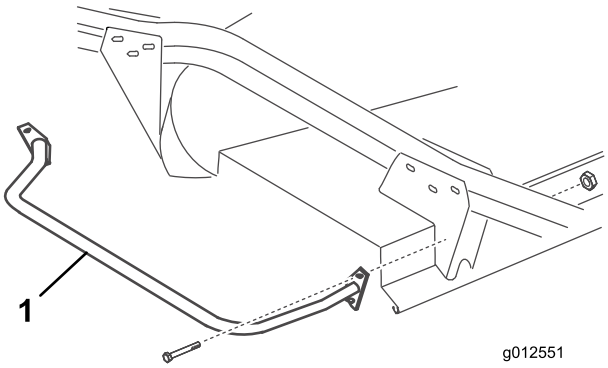

Figure 23

1. Bumper

3. Using both mounting plates of the bumper as templates, locate, mark, and drill 3 additional 11/32 inch diameter holes through both walls of the front and rear castor arm brackets.

11

Installing the New Deck Cover

Parts needed for this procedure:

1	Trim molding
1	Deck cover

Procedure

1. Insert a trim molding onto the right bridge bar, so the side of the spring bracket is 10 cm (4 inches) to the far edge of the trim molding (Figure 24).

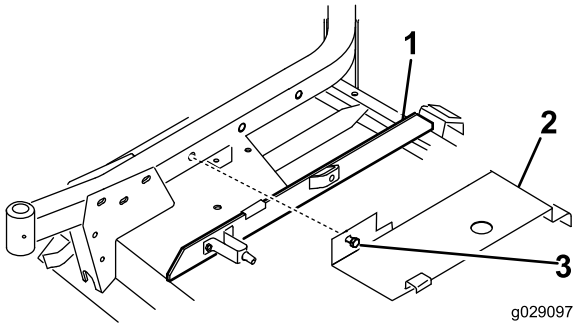

Figure 24

1. Trim molding
2. Cover
3. Bolt

2. Hook the rear of the deck cover (Figure 24) onto the rear channel pin while aligning the cover mounting bolt with the hole in the right castor arm. The cover is to rest on the trim molding. Adjust the molding as required.
3. Secure the cover to the right castor arm with the bolt.

12

Installing the New Safety Guards

Parts needed for this procedure:

1	Belt guard
1	Pulley guard

Procedure

1. Install the belt guard onto the machine (Figure 25).

   Note: Use existing hardware on the machine by removing it and using it to install the guard.

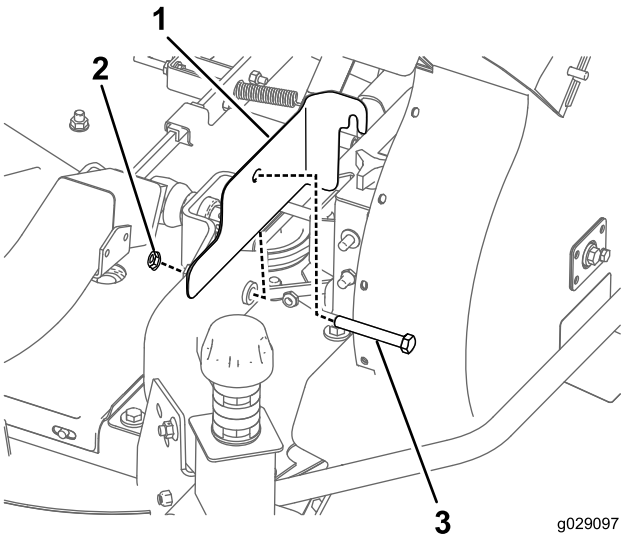

Figure 25

1. Belt guard
2. Nut
3. Bolt

2. Install the pulley guard onto the machine (Figure 26).

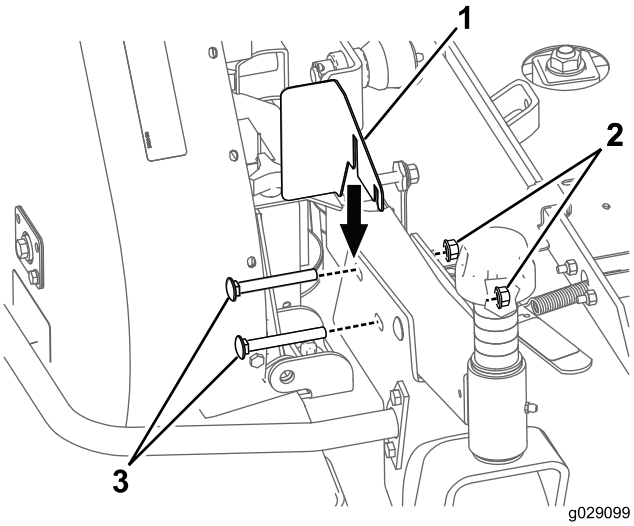

Figure 26

1. Pulley guard
2. Nut
3. Bolt

Note: Use existing hardware on the machine by removing it and using it to install the guard.

13

Installing the New Counterbalance Spring (200 series traction units only)

Parts needed for this procedure:

1	Counterbalance spring

Procedure

To compensate for the additional weight of the blower assembly, the original light counterbalance spring at the right side of the machine, must be replaced with the heavier spring included (Figure 27).

1. Remove the hair pin cotter and clevis pin and slide the spring assembly out of the retaining bracket.
2. Screw the spring off of the top and bottom mounting brackets.
3. Screw the new heavy spring onto both mounting brackets. Ensure that the spring is completely threaded through all holes and it contacts the flat side of the bracket.

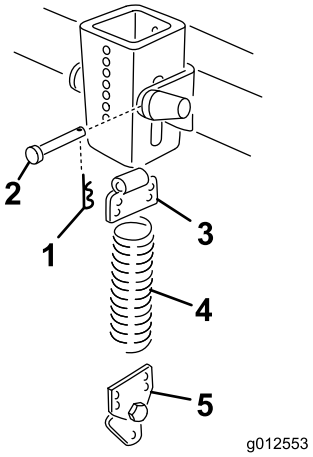

Figure 27

1. Hair pin cotter
2. Clevis pin
3. Top bracket
4. Spring
5. Bottom bracket

4. Install the spring assembly into the retaining bracket with a clevis pin and hairpin cotter.

14

Installing the Cutting Unit to the Traction Unit

No Parts Required

Procedure

1. Engage the parking brake, ensure that the traction pedal is in neutral and the PTO lever is in the Off position. Start the engine and raise the lift arms. Stop the engine.
2. Position the cutting unit in front of the traction unit aligning the gear case input shaft with the PTO shaft and install the shaft.
3. Carefully lower the lift arms while aligning the lift arm brackets with the castor arms. Align PTO shaft hole with gear case input shaft hole and install roll pin.
4. Secure the lift arm brackets and the side of the blower brace to the castor arms with 4 bolts and nuts.
5. Start the engine and raise the cutting unit. Secure the counterbalance springs to the cutting unit with shoulder bolts and locknuts.

15

Installing the New Decal

Parts needed for this procedure:

1	Decal, danger

Procedure

Install the Danger Decal (Part Number 66-1340 or 93-7824 for CE) on the front edge of the deck, inside the right castor arm.

16

Mounting the Blower Housing Chute

Parts needed for this procedure:

1	Chute assembly

Procedure

Important: When the chute in the Blower Kit is used with a 15 cubic foot Hopper Kit, you must cut off a section of the chute to ensure proper fit between the blower and the hopper. If used with another kit, proceed to step 3.

1. Using the dimensions shown in Figure 28, use a tape measure and mark the chute.

   Note: For convenience, some chutes may have a light scribe mark where the chute must be cut off.

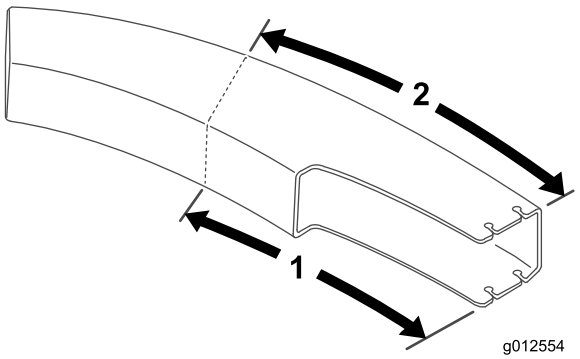

Figure 28

1. 61.2 cm (24.12 inches)
2. 70.5 cm (27.75 inches)

2. Draw lines around all sides of the chute and cut off with a saw.
3. Set the deck to the desired height-of-cut setting.
4. Slide the chute over the blower opening and onto the mounting studs (Figure 29).

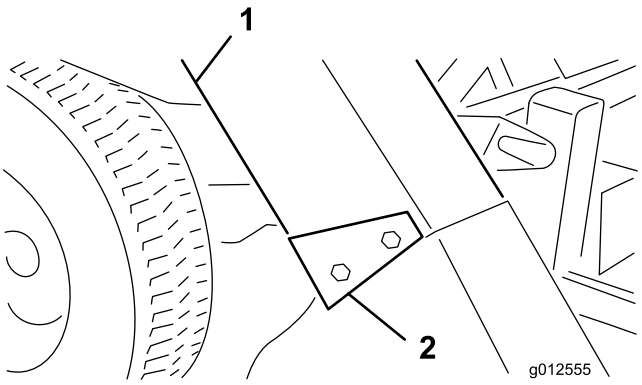

Figure 29

1. Chute
2. Chute brackets

5. Lower the hopper hood and align the chute with the hood snout. Secure the chute in position with 4 locknuts (5/16 inch) and chute brackets. Position the wide end of brackets to the rear.

Operation

Operating Characteristics

(When used with a 9 cu. ft. or 15 cu. ft. Hopper Kit)

⚠ CAUTION

When the grass collector is removed, never operate without the deflector in place.

For best performance, regulate the traction pedal to keep the engine rpm high and somewhat constant. A good rule to follow is: decrease ground speed as the load on the cutting blade increases; and increase ground speed as the load on the blade decreases. This allows the engine, working with the transmission, to sense the proper ground speed while maintaining high blade tip speed necessary for good quality-of-cut, vacuuming action, and to throw grass into hopper. If blower speed drops too low, plugging may result. Refer to the *Cutting Unit and Traction Unit Operator's Manual* for operation of each.

⚠ DANGER

Never place hands or feet in the chute, blower, or cutting unit.

1. This grass collector is designed for use in wet or dry conditions. Do not collect extremely long grass as the hopper will fill too quickly.
2. When bagging wet, heavy grass, some clippings may not be thrown completely through the chute. The hole in the bottom of the chute allows these clippings to drop out without plugging the chute. When this happens, reduce the ground speed.
3. The bumper which protects the blower housing does not extend far enough to eliminate the chance of the bagger striking a stationary object. Stay far enough away from obstructions to avoid collisions. Trim with the left side of the cutting unit only.

⚠ CAUTION

Use care to avoid collision between the hopper and any stationary objects. Always trim with the left side of the cutting unit.

4. While operating, check frequently for excessive clippings left on the turf or uncut grass. If those conditions occur, the blower or cutting unit may be plugged. Stop the unit, disengage the PTO, set the brake, and stop the engine. Check for obstructions in the chute, blower or cutting unit. Clear any obstruction using a stick or similar tool. Check the blower belt tension. If it is slipping, readjust the tension.
5. Cut grass often, especially when it grows rapidly. If shorter turf is desired, cut the grass again. Overlap the swaths to produce an even cutting pattern.

Important: When transporting the unit, tie down the grass collector hood or back it onto the truck or trailer to avoid wind throwing the hood open and damaging it.

Removing the Blower

1. Stop the engine and disengage the idler. Secure the idler to the front castor arm bracket with the retaining hook.
2. Remove the belt cover and lift the belt off of the spindle pulley. Install the cover.
3. Remove the 2 knobs securing the blower to the mounting brackets and remove the blower, belt, and chute.
4. Reverse the procedure to install the blower assembly.

Using the Grass Deflector

At some time you may wish to operate the cutting deck without the blower. Since a new pivot should have already been installed on the grass deflector, you can quickly mount the deflector to the blower mounting brackets.

1. Remove the bumper from the deck.
2. Slide the slots at bottom of the deflector pivot bracket onto the bolts at side of the deck brackets (Figure 30).

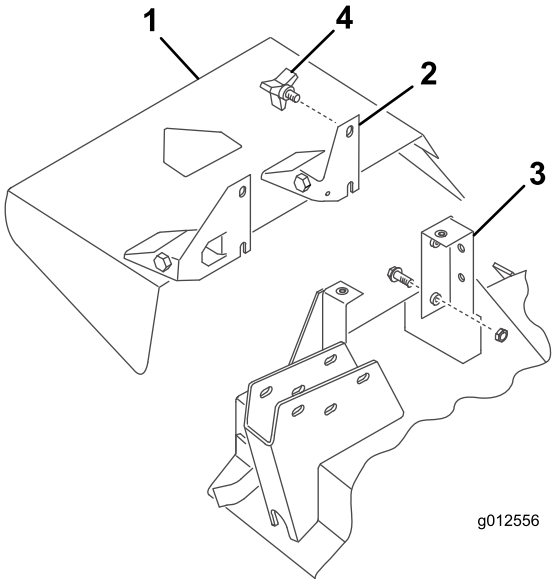

Figure 30

1. Grass deflector
2. Pivot bracket
3. Deck bracket
4. Knob

3. Secure the deflector in place with the 2 knobs.

Maintenance

- Check the blower gearbox impeller for tightness every 50 hours. Torque the impeller shaft bolt to 25 to 25.8 N-m (220 to 230 in-lb).
- Clean grass clippings from the hood, chute, blower, and cutting unit after each use. Wash the underside of the cutting unit daily with hose. An excessive buildup of clippings will impair the collection system performance.
- Check the belt tension and wear every 50 hours. To adjust the belt tension, loosen the idler mounting screws, engage the idler lever, and push the idler pulley firmly into the blower belt. Tighten the mounting screws.
- The blower gear box should need little maintenance. Check for leakage every 50 hours. If leakage should occur, replace the seals and refill it with 2 oz. of high quality moly disulfide grease. Repack the bearings with this grease before assembling.
- Refer to *Cutting Unit and Traction Unit Operator's Manuals* for the service requirements of each.
- Keep the unit clean. Ensure that the engine is free of dirt and chaff. Make sure all fasteners are tight. Check the deflectors, baffles, and shields for wear and replace as needed.

Declaration of Incorporation

Model No.	Serial No.	Product Description	Invoice Description	General Description	Directive
30506	315000001 and Up	62in Blower Kit, Groundsmaster 200/3280-D/3320 Series Side Discharge Mowers	GM200 62" BLOWER KIT	62in Blower Kit	2006/42/EC, 2000/14/EC

Relevant technical documentation has been compiled as required per Part B of Annex VII of 2006/42/EC.

We will undertake to transmit, in response to requests by national authorities, relevant information on this partly completed machinery. The method of transmission shall be electronic transmittal.

This machinery shall not be put into service until incorporated into approved Toro models as indicated on the associated Declaration of Conformity and in accordance with all instructions, whereby it can be declared in conformity with all relevant Directives.

Certified:



David Klis
Sr. Engineering Manager
8111 Lyndale Ave. South
Bloomington, MN 55420, USA
September 29, 2014

EU Technical Contact:

Peter Tetteroo
Toro Europe NV
B-2260 Oevel-Westerloo
Belgium

Tel. 0032 14 562960
Fax 0032 14 581911

International Distributor List

Distributor:	Country:	Phone Number:	Distributor:	Country:	Phone Number:
Agrolanc Kft	Hungary	36 27 539 640	Maquiver S.A.	Colombia	57 1 236 4079
Balama Prima Engineering Equip.	Hong Kong	852 2155 2163	Maruyama Mfg. Co. Inc.	Japan	81 3 3252 2285
B-Ray Corporation	Korea	82 32 551 2076	Mountfield a.s.	Czech Republic	420 255 704 220
Casco Sales Company	Puerto Rico	787 788 8383	Mountfield a.s.	Slovakia	420 255 704 220
Ceres S.A.	Costa Rica	506 239 1138	Munditol S.A.	Argentina	54 11 4 821 9999
CSSC Turf Equipment (pvt) Ltd.	Sri Lanka	94 11 2746100	Norma Garden	Russia	7 495 411 61 20
Cyril Johnston & Co.	Northern Ireland	44 2890 813 121	Oslinger Turf Equipment SA	Ecuador	593 4 239 6970
Cyril Johnston & Co.	Republic of Ireland	44 2890 813 121	Oy Hako Ground and Garden Ab	Finland	358 987 00733
Equiver	Mexico	52 55 539 95444	Parkland Products Ltd.	New Zealand	64 3 34 93760
Femco S.A.	Guatemala	502 442 3277	Perfetto	Poland	48 61 8 208 416
ForGarder OU	Estonia	372 384 6060	Pratoverde SRL.	Italy	39 049 9128 128
G.Y.K. Company Ltd.	Japan	81 726 325 861	Prochaska & Cie	Austria	43 1 278 5100
Geomechaniki of Athens	Greece	30 10 935 0054	RT Cohen 2004 Ltd.	Israel	972 986 17979
Golf international Turizm	Turkey	90 216 336 5993	Riversa	Spain	34 9 52 83 7500
Guandong Golden Star	China	86 20 876 51338	Lely Turfcare	Denmark	45 66 109 200
Hako Ground and Garden	Sweden	46 35 10 0000	Solvert S.A.S.	France	33 1 30 81 77 00
Hako Ground and Garden	Norway	47 22 90 7760	Spypros Stavrinides Limited	Cyprus	357 22 434131
Hayter Limited (U.K.)	United Kingdom	44 1279 723 444	Surge Systems India Limited	India	91 1 292299901
Hydroturf Int. Co Dubai	United Arab Emirates	97 14 347 9479	T-Markt Logistics Ltd.	Hungary	36 26 525 500
Hydroturf Egypt LLC	Egypt	202 519 4308	Toro Australia	Australia	61 3 9580 7355
Irrimac	Portugal	351 21 238 8260	Toro Europe NV	Belgium	32 14 562 960
Irrigation Products Int'l Pvt Ltd.	India	0091 44 2449 4387	Valtech	Morocco	212 5 3766 3636
Jean Heybroek b.v.	Netherlands	31 30 639 4611	Victus Emak	Poland	48 61 823 8369

European Privacy Notice

The Information Toro Collects
Toro Warranty Company (Toro) respects your privacy. In order to process your warranty claim and contact you in the event of a product recall, we ask you to share certain personal information with us, either directly or through your local Toro company or dealer.

The Toro warranty system is hosted on servers located within the United States where privacy law may not provide the same protection as applies in your country.

BY SHARING YOUR PERSONAL INFORMATION WITH US, YOU ARE CONSENTING TO THE PROCESSING OF YOUR PERSONAL INFORMATION AS DESCRIBED IN THIS PRIVACY NOTICE.

The Way Toro Uses Information
Toro may use your personal information to process warranty claims, to contact you in the event of a product recall and for any other purpose which we tell you about. Toro may share your information with Toro's affiliates, dealers or other business partners in connection with any of these activities. We will not sell your personal information to any other company. We reserve the right to disclose personal information in order to comply with applicable laws and with requests by the appropriate authorities, to operate our systems properly or for our own protection or that of other users.

Retention of your Personal Information
We will keep your personal information as long as we need it for the purposes for which it was originally collected or for other legitimate purposes (such as regulatory compliance), or as required by applicable law.

Toro's Commitment to Security of Your Personal Information
We take reasonable precautions in order to protect the security of your personal information. We also take steps to maintain the accuracy and current status of personal information.

Access and Correction of your Personal Information
If you would like to review or correct your personal information, please contact us by email at legal@toro.com.

Australian Consumer Law

Australian customers will find details relating to the Australian Consumer Law either inside the box or at your local Toro Dealer.

Toro General Commercial Product Warranty

A Two-Year Limited Warranty

Conditions and Products Covered

The Toro Company and its affiliate, Toro Warranty Company, pursuant to an agreement between them, jointly warrant your Toro Commercial product ("Product") to be free from defects in materials or workmanship for two years or 1500 operational hours*, whichever occurs first. This warranty is applicable to all products with the exception of Aerators (refer to separate warranty statements for these products). Where a warrantable condition exists, we will repair the Product at no cost to you including diagnostics, labor, parts, and transportation. This warranty begins on the date the Product is delivered to the original retail purchaser.
* Product equipped with an hour meter.

Instructions for Obtaining Warranty Service

You are responsible for notifying the Commercial Products Distributor or Authorized Commercial Products Dealer from whom you purchased the Product as soon as you believe a warrantable condition exists. If you need help locating a Commercial Products Distributor or Authorized Dealer, or if you have questions regarding your warranty rights or responsibilities, you may contact us at:

Toro Commercial Products Service Department
Toro Warranty Company
8111 Lyndale Avenue South
Bloomington, MN 55420-1196

952–888–8801 or 800–952–2740
E-mail: commercial.warranty@toro.com

Owner Responsibilities

As the Product owner, you are responsible for required maintenance and adjustments stated in your *Operator's Manual*. Failure to perform required maintenance and adjustments can be grounds for disallowing a warranty claim.

Items and Conditions Not Covered

Not all product failures or malfunctions that occur during the warranty period are defects in materials or workmanship. This warranty does not cover the following:

- Product failures which result from the use of non-Toro replacement parts, or from installation and use of add-on, or modified non-Toro branded accessories and products. A separate warranty may be provided by the manufacturer of these items.
- Product failures which result from failure to perform recommended maintenance and/or adjustments. Failure to properly maintain your Toro product per the Recommended Maintenance listed in the *Operator's Manual* can result in claims for warranty being denied.
- Product failures which result from operating the Product in an abusive, negligent, or reckless manner.
- Parts subject to consumption through use unless found to be defective. Examples of parts which are consumed, or used up, during normal Product operation include, but are not limited to, brake pads and linings, clutch linings, blades, reels, rollers and bearings (sealed or greasable), bed knives, spark plugs, castor wheels and bearings, tires, filters, belts, and certain sprayer components such as diaphragms, nozzles, and check valves, etc.
- Failures caused by outside influence. Conditions considered to be outside influence include, but are not limited to, weather, storage practices, contamination, use of unapproved fuels, coolants, lubricants, additives, fertilizers, water, or chemicals, etc.
- Failure or performance issues due to the use of fuels (e.g. gasoline, diesel, or biodiesel) that do not conform to their respective industry standards.
- Normal noise, vibration, wear and tear, and deterioration.
- Normal "wear and tear" includes, but is not limited to, damage to seats due to wear or abrasion, worn painted surfaces, scratched decals or windows, etc.

Parts

Parts scheduled for replacement as required maintenance are warranted for the period of time up to the scheduled replacement time for that part. Parts replaced under this warranty are covered for the duration of the original product warranty and become the property of Toro. Toro will make the final decision whether to repair any existing part or assembly or replace it. Toro may use remanufactured parts for warranty repairs.

Deep Cycle and Lithium-Ion Battery Warranty:

Deep cycle and Lithium-Ion batteries have a specified total number of kilowatt-hours they can deliver during their lifetime. Operating, recharging, and maintenance techniques can extend or reduce total battery life. As the batteries in this product are consumed, the amount of useful work between charging intervals will slowly decrease until the battery is completely worn out. Replacement of worn out batteries, due to normal consumption, is the responsibility of the product owner. Battery replacement may be required during the normal product warranty period at owner's expense. Note: (Lithium-Ion battery only): A Lithium-Ion battery has a part only prorated warranty beginning year 3 through year 5 based on the time in service and kilowatt hours used. Refer to the *Operator's Manual* for additional information.

Maintenance is at Owner's Expense

Engine tune-up, lubrication, cleaning and polishing, replacement of filters, coolant, and completing recommended maintenance are some of the normal services Toro products require that are at the owner's expense.

General Conditions

Repair by an Authorized Toro Distributor or Dealer is your sole remedy under this warranty.

Neither The Toro Company nor Toro Warranty Company is liable for indirect, incidental or consequential damages in connection with the use of the Toro Products covered by this warranty, including any cost or expense of providing substitute equipment or service during reasonable periods of malfunction or non-use pending completion of repairs under this warranty. Except for the Emissions warranty referenced below, if applicable, there is no other express warranty. All implied warranties of merchantability and fitness for use are limited to the duration of this express warranty.

Some states do not allow exclusions of incidental or consequential damages, or limitations on how long an implied warranty lasts, so the above exclusions and limitations may not apply to you. This warranty gives you specific legal rights, and you may also have other rights which vary from state to state.

Note regarding engine warranty:

The Emissions Control System on your Product may be covered by a separate warranty meeting requirements established by the U.S. Environmental Protection Agency (EPA) and/or the California Air Resources Board (CARB). The hour limitations set forth above do not apply to the Emissions Control System Warranty. Refer to the Engine Emission Control Warranty Statement supplied with your product or contained in the engine manufacturer's documentation for details

Countries Other than the United States or Canada

Customers who have purchased Toro products exported from the United States or Canada should contact their Toro Distributor (Dealer) to obtain guarantee policies for your country, province, or state. If for any reason you are dissatisfied with your Distributor's service or have difficulty obtaining guarantee information, contact the Toro importer.

374-0253 Rev C