FORM NO. 3317–207 Rev. A

TORO®

MODEL NO. 22043 – 5900001 & UP

OPERATOR'S MANUAL

PROLINE 21" RECYCLER® II
MOWER

⚠ SAFETY INSTRUCTIONS

This mower meets or exceeds CPSC blade safety requirements for walk behind rotary mowers and the B71.4–1990 specifications of the American National Standards Institute. However, improper use or maintenance by the operator or owner can result in injury. To reduce the potential for injury, comply with these safety instructions and always pay attention to the safety alert symbol ⚠ which means CAUTION, WARNING and DANGER. Failure to comply with these instructions may result in personal injury.

WARNING: Engine exhaust contains carbon monoxide which is an odorless, deadly poison. Carbon monoxide is also known to the State of California to cause birth defects. Do not run engine indoors or in an enclosed area.

BEFORE OPERATING

1. Read this manual carefully before operating the mower. Become familiar with the controls and proper use of the mower. Never allow children to operate the mower or adults to operate it without proper instructions.

2. Keep everyone, especially children and pets, away from area of operation. Thoroughly inspect area where mower will be used and remove sticks, stones, wire, and debris.

3. Wear long pants and substantial shoes. Do not operate mower while wearing open–toed shoes, jewelry, loose clothing or when barefoot.

4. Always wear safety glasses or eye shields during operation to protect eyes from foreign objects that may be thrown from the machine.

5. Check fuel level before starting engine. Because fuel is highly flammable, handle it carefully.

A. Use an approved container.

B. Fill fuel tank outdoors, not indoors. **NEVER ADD FUEL TO AN ENGINE THAT IS RUNNING OR HOT.**

C. Install gas cap on fuel container and gas tank, and wipe up any spilled gasoline before starting engine.

6. Keep all guards, shields, safety devices, grass catcher, discharge tunnel plug or optional discharge chute in place. Repair or replace damaged or missing parts, including decals. Check all safety devices before each use.

7. Blade and traction drive are designed to stop when the control bar is released. Ensure control bar functions properly before and during each use of mower.

WHILE OPERATING

8. Do not run engine indoors.

9. Always maintain secure footing. Keep a firm grip on the handle and walk; never run. Never operate mower in wet grass. Mow only in daylight or in good artificial light.

10. Mow across the face of slopes; never up and down. Use extreme caution when changing direction on slopes. Do not mow excessively steep slopes.

11. Keep face, hands, and feet away from the mower housing and cutter blade when the engine is running. Stay behind the handle until the engine stops and keep clear of discharge opening at all times.

12. When bagging grass, stop engine and ensure discharge door is closed before removing and emptying bag.

13. Stop the engine and wait for all moving parts to stop before unclogging discharge tunnel, removing grass bag or discharge tunnel plug. Use a stick, not your hand, to unclog discharge tunnel. Never attempt to unclog the tunnel with the engine running.

14. Since the blade rotates for a few seconds after releasing the blade control bar, stay behind the handle until all moving parts stop.

15. After striking a foreign object or if mower vibrates abnormally, stop engine and remove wire from spark plug. Check mower for damage and make all repairs before using mower again.

16. Stop the engine and wait for all moving parts to stop before adjusting the height–of–cut.

17. Stop the blade when crossing a gravel driveway, road or sidewalk.

18. Stop engine before leaving the operator's position—behind the handle. Disconnect wire from spark plug if mower will be unattended or not used.

©The Toro Company–1994, Rev. 1995
All Rights Reserved

SAFETY INSTRUCTIONS

19. Do not touch engine while it is running or shortly after it is stopped because engine will be hot enough to cause a burn.

20. Refuel only when engine is cool.

MAINTENANCE

21. Perform only those maintenance instructions described in this manual. If major repairs are ever needed or if assistance is desired, contact your local Authorized TORO Service Dealer.

22. Before mower is cleaned, inspected, serviced, or adjusted, stop engine and disconnect wire from spark plug. Keep wire away from plug to prevent accidental starting.

23. To ensure the mower is in safe operating condition, frequently check and keep all nuts, bolts, and screws tight. Ensure blade nuts are tightened to 15–27 ft–lb (20–37 N·m).

24. To reduce fire hazard, keep engine free of excessive grease, grass, leaves, and accumulation of dirt.

25. Check grass catcher bag frequently for wear or deterioration. Replace with a new bag for your protection. Check that replacement bags comply with original TORO recommendations or specifications.

26. Allow engine to cool before storing mower in any enclosure. Do not store mower near any open flame or where gasoline fumes may be ignited by a spark.

27. Do not overspeed the engine by changing governor settings.

28. At the time of manufacture, the mower conformed to the safety standards in effect for rotary mowers. To ensure best performance and continued safety certification of the mower, use genuine TORO replacement parts and accessories. Replacement parts and accessories made by other manufacturers may result in non–conformance with the safety standards, and that could be dangerous.

SAFETY DECALS AND INSTRUCTIONS

Safety decals and instructions are easily visible to the operator and are located near any area of potential danger. Replace any decal that is damaged or lost.



ON DISCHARGE TUNNEL

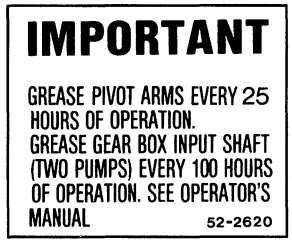

ON BELT COVER
(Part No. 52–2620)

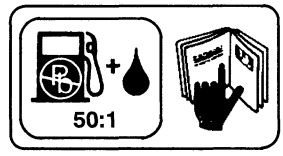

ON ENGINE
(Part No. 62–7600)



ON MOWER HOUSING
(Part No. 43–8480)



ON MOWER HOUSING
(Part No. 71–9370)

SAFETY DECALS AND INSTRUCTIONS

Safety decals and instructions are easily visible to the operator and are located near any area of potential danger. Replace any decal that is damaged or lost.



ON CONTROL PANEL
(Part No. 85–6730)



ON REAR OF CONTROL PANEL
(Part No. 63–9060)

TABLE OF CONTENTS

	Page
Set–Up Instructions	4
Before Operating	6
Recycling Tips	7
Operating Instructions	8
Maintenance	11
Servicing Air Cleaner	11
Replacing Spark Plug	11
Draining Gasoline	11
Adjusting Throttle	11
Cleaning Cooling System	12
Cleaning Muffler Exhaust Port	12
Adjusting Wheel Drive	12
Inspecting/Removing/Sharpening Blade	13
Lubrication	14
Lubricating Gear Case	14
Adjusting Blade Brake Cable	15
Cleaning Mower	15
Cleaning Blade Brake Clutch Shield	16
Servicing Wheels	17
Preparing Mower For Storage	18
Optional Equipment	19
Toro Service Support	19
Product Identification	19
The Toro Total Coverage Guarantee	Back Page

SET–UP INSTRUCTIONS

INSTALL HANDLE (Fig. 1)

1. Mount handle to outside of mower housing, using bottom hole, with (2) 5/16–18 x 1–1/4" lg. capscrews, washers, and thin nylon insert locknuts.

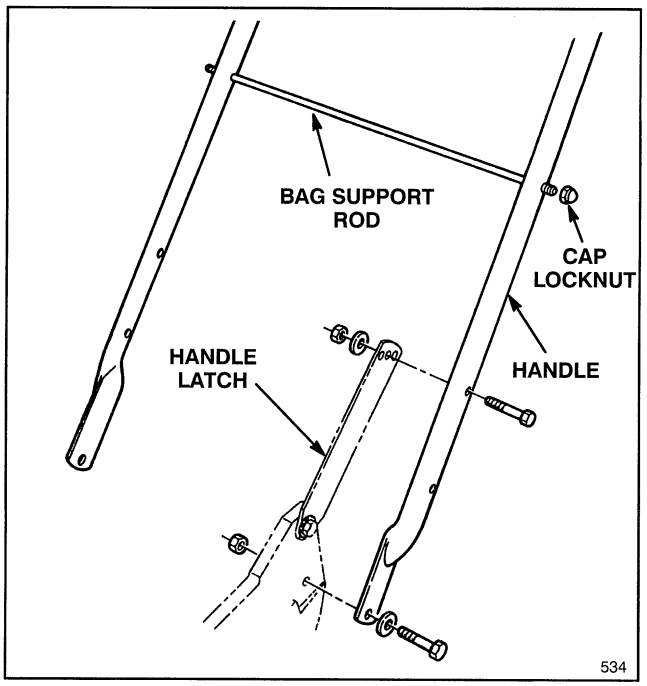

Figure 1

2. Secure handle latches to handle with (2) 5/16–18 x 1–1/2" lg. capscrews, washers and nylon insert locknuts. Position locknuts and washers on inside of handle.

Note: Handle height is adjustable for operator comfort. Stand behind mower handle to gauge height. To adjust handle height, reposition capscrews and locknuts securing handle latches to handle into other mounting holes in latches.

3. Slide bag support rod thru **top** mounting holes in handle and secure each end with a cap locknut (Fig. 1).

4. Use a cable tie to secure the control cables to left handle below the bag support rod.

INSTALL GAS TANK AND FUEL LINE

1. Start self–tapping screws into bottom of gas tank and then remove screws.

2. Hook plastic clips on front of gas tank onto gas tank bracket (Fig. 2).

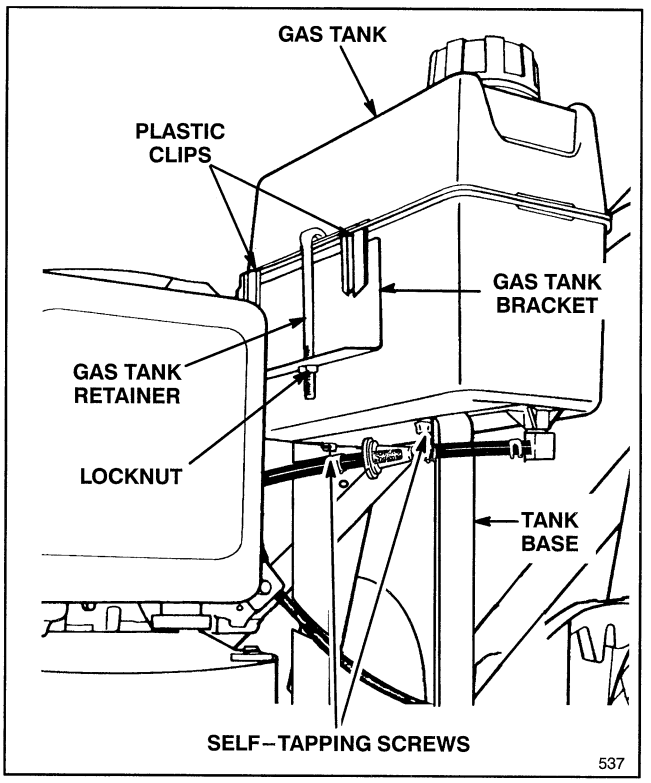

Figure 2

SET UP INSTRUCTIONS

3. Secure gas tank to tank base with the (2) self–tapping screws (Fig. 2). Do not overtighten screws.

4. Hook gas tank retainer onto rear of gas tank and slide end of retainer into hole in tank bracket. Secure retainer to tank bracket with locknut (Fig 2). Do not overtighten locknut.

5. Remove red cap from end of fuel line and from end of elbow fitting on gas tank. Slide end of fuel line onto elbow fitting (Fig. 3). Secure fuel line in place with fuel line clamp.

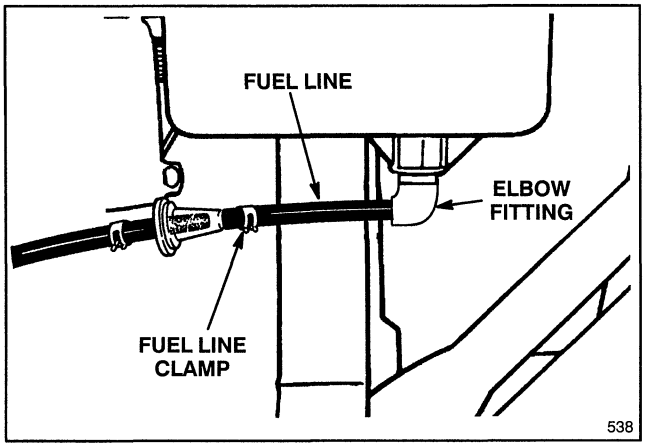

Figure 3

INSTALL AIR CLEANER COVER (Fig. 4)

1. Insert bottom tabs of air cleaner cover into slots. Rotate cover upwards and snap into place.

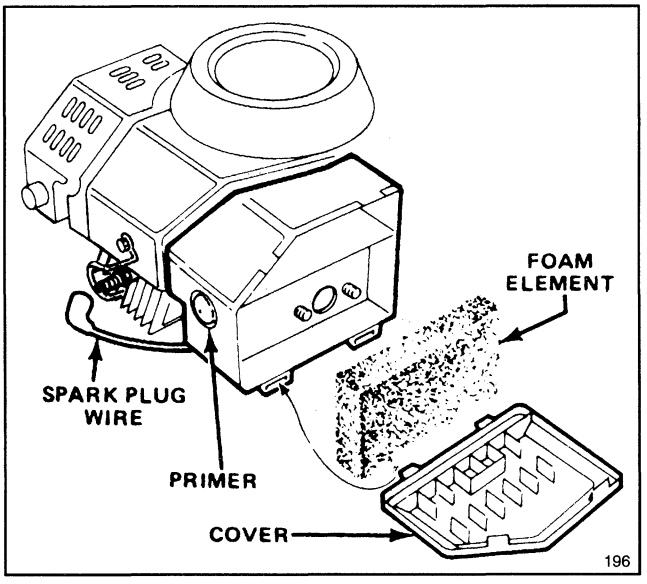

Figure 4

INSTALL DISCHARGE TUNNEL PLUG

1. Open the discharge door by pulling forward on the handle and moving it rearwards (Fig. 5). Hold the discharge door handle to prevent the spring–loaded door from closing while inserting the plug.

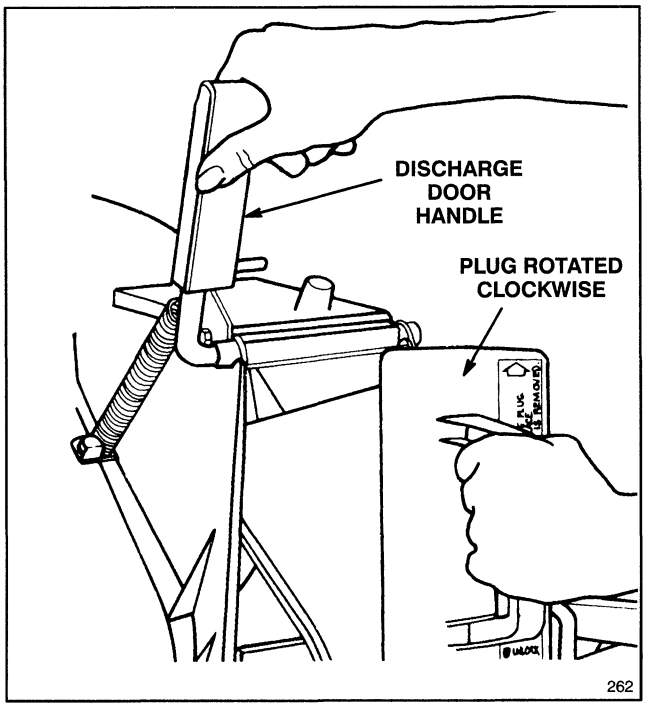

Figure 5

2. Since the plug is slightly wider than the discharge tunnel opening, rotate the plug clockwise slightly while inserting it (Fig. 5). Make sure the arrow on the plug decal is pointing upwards.

3. Push the plug all the way in until the spring clip on the bottom of the plug clicks into place, locking the plug securely into the discharge tunnel (Fig. 6). Release discharge door handle to lock top of plug.

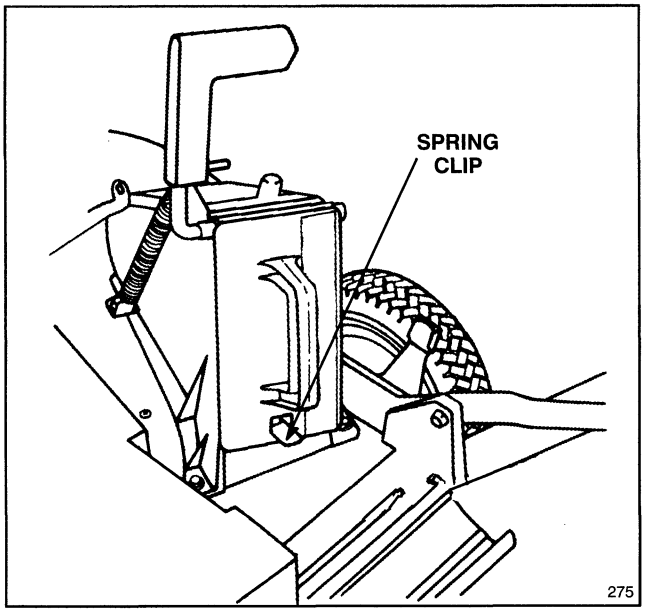

Figure 6

BEFORE OPERATING

WARNING

DANGER: Gasoline is extremely flammable and explosive under certain conditions. Do not smoke when handling fuel and keep fuel far away from open flames and sparks. Never buy more than a 30 day supply of gasoline. Store it in an approved container. Keep gasoline out of reach of children.

Refuel outdoors and only when engine is cold. Do not fill tank full. Fill tank to 1/4" to 1/2" (6 to 13 mm) from top of tank, not into filler neck. This space is for expansion of fuel. Use funnel or spout to prevent spilling. Wipe up any spilled gas.

MIX GASOLINE AND OIL—50:1 RATIO

1. APPROVED OIL—For simplicity and best engine performance, mix the contents of one bottle of Toro 50:1 Two–Cycle Oil with two gallons of fresh, unleaded regular gasoline. Leaded regular gasoline may be used if unleaded regular is not available.

Toro Two–Cycle Oil is specially formulated to provide superior lubrication, make starting easy, and prolong engine life. if Toro Two–Cycle Oil is not available, mix two gallons of gasoline and 5.2 ounces of another high grade two–cycle oil that has the NMMA or BIA–TCW certification printed on the label.

IMPORTANT: YOU CAN ALSO USE TORO "EASY–MIX" TWO–CYCLE OIL (3.2 OUNCE BOTTLE MIXED ONE PER GALLON OF GASOLINE: this is a 40:1 ratio) IN THIS TORO TWO–CYCLE ENGINE.

NEVER USE AUTOMOTIVE OIL (i.e. SAE 30, 10W30 etc.), TWO–CYCLE OIL THAT IS NOT CERTIFIED NMMA/BIA–TCW, OR THE WRONG MIX RATIO BECAUSE THE ENGINE CAN BE DAMAGED, AND IT WOULD NOT BE COVERED BY THE TORO WARRANTY.

Toro also recommends that Toro Stabilizer/Conditioner be used regularly in all Toro gasoline powered products during operation and storage seasons. Toro Stabilizer/Conditioner cleans the engine during operation and prevents gum–like varnish deposits from forming in the engine during periods of storage.

2. Mixing Gasoline and Oil (Fig. 7)—Pour correct amount of two–cycle oil into an approved gasoline container and add a half gallon of gasoline. Install cap on gasoline container and shake the container to mix oil and gas thoroughly. Remove cap and add remaining amount of gasoline.

IMPORTANT: NEVER USE METHANOL, GASOLINE CONTAINING METHANOL, GASOHOL CONTAINING MORE THAN 10% ETHANOL, PREMIUM GASOLINE, OR WHITE GAS BECAUSE ENGINE FUEL SYSTEM DAMAGE COULD RESULT.

DO NOT USE FUEL ADDITIVES OTHER THAN THOSE MANUFACTURED FOR FUEL STABILIZATION DURING STORAGE SUCH AS TORO'S STABILIZER/CONDITIONER OR A SIMILAR PRODUCT. TORO'S STABILIZER/CONDITIONER IS A PETROLEUM DISTILLATE BASED CONDITIONER/STABILIZER. TORO DOES NOT RECOMMEND STABILIZERS WITH AN ALCOHOL BASE SUCH AS ETHANOL, METHANOL OR ISOPROPYL. ADDITIVES SHOULD NOT BE USED TO TRY TO ENHANCE THE POWER OR PERFORMANCE OF MACHINE.

NOTE: Do not mix gasoline and oil in the product fuel tank. Oil that is at room temperature mixes easier and more thoroughly than cold oil.

50:1 GAS/OIL Mixing Chart

U.S. GALLON	
Gasoline	**Oil**
1 gallon	2.6 oz.
2 gallons	5.2 oz.

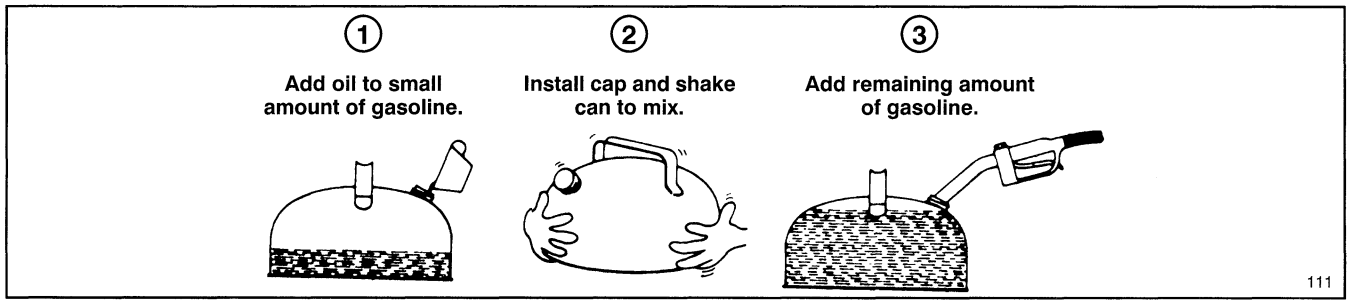

Figure 7

RECYCLING TIPS

GENERAL TIPS

Follow these instructions whether cutting grass or leaves for the best cutting results and lawn appearance:

- Maintain a **sharp blade** throughout the cutting season. Periodically file down nicks on blade.
- **Only mow dry grass or leaves.** Wet grass and leaves tend to clump on yard and may cause mower to plug or engine to stall. They also may be slippery to walk on and could cause you to slip and fall.

⚠ WARNING

- **Wet grass or leaves can cause you to slip and contact blade.**
- **Blade contact can seriously injure you.**
- **Mow only in dry conditions.**

- Set engine speed to fastest position. Maximum horsepower provides best cutting results.
- Clean clippings or leaves from underside of mower deck after each mowing.
- Keep engine in good running condition. Cutting and recutting requires more horsepower.
- Clean air filter more frequently. Cutting and recutting stirs up more clippings and dust which clogs the air filter and reduces engine performance.

CUTTING GRASS

- Grass grows at different rates at different times of the year. In the heat of the summer, it is generally best to cut grass at the 1-3/4", 2-1/4" or 2-3/4" height-of-cut settings (Fig. 8). Only about 1/3 of the grass blade should be cut off. Cutting below the 1-3/4" setting is not recommended unless grass is sparse or it is late fall when grass growth begins to slow down.

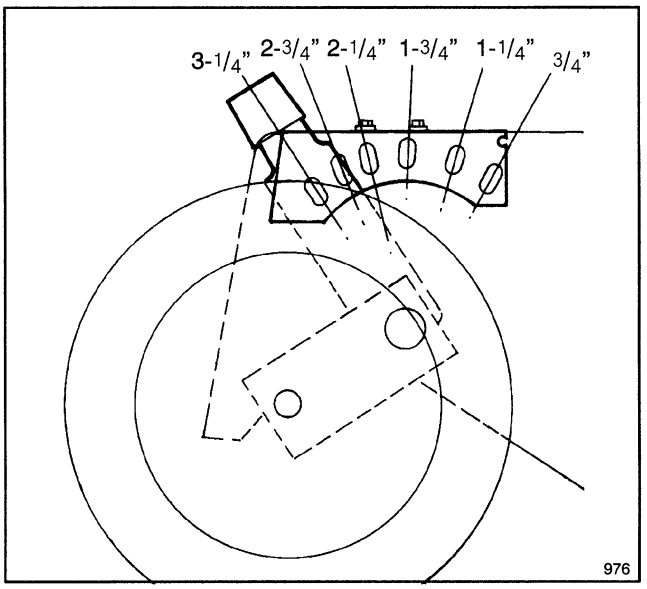

Figure 8

- When cutting grass over six inches tall, you may want to first mow using the highest height-of-cut setting and a slower walking speed; then mow again at a lower setting for best lawn appearance. If grass is too long and leaves clumps on top of lawn, mower may plug and cause engine to stall.
- Alternate mowing direction. This helps disperse clippings over lawn for even fertilization.

If the finished cut lawn appearance is unsatisfactory, try one or more of the following:

- Sharpen the blade.
- Walk at a slower pace while mowing.
- Raise the height-of-cut setting on your mower.
- Cut grass more frequently.
- Overlap cutting swaths instead of cutting a full swath with each pass.
- Mow across the marginal areas a second time.
- Set height-of-cut on front wheels one notch lower than rear wheels. (example: set front wheels at 1-3/4" setting and rear wheels at 2-1/4" setting)

CUTTING LEAVES

- When cutting is complete, always be sure that 50% of the lawn shows through the cut leaf cover. This may require one or more passes over the leaves.
- For light leaf coverage, position all wheels at the same height-of-cut setting.
- If there are more than five inches of leaves on lawn, set the front wheels one or two notches higher than the rear wheels. This makes it easier to feed leaves under mower deck.
- Walk at a slower mowing speed if leaves are not being cut up finely enough to be hidden down in the grass.
- If you cut up a lot of oak leaves, you might want to add lime to your grass in the spring. Lime reduces the acidity of oak leaves.

OPERATING INSTRUCTIONS

OPERATING TIPS

1. BEFORE EACH MOWING—Be sure blade brake, self–propelled drive, and control bar function properly. When control bar is released, blade and self–propelled drive are designed to stop. If controls are not functioning properly, do not use mower until controls are repaired.

2. SHARP BLADE—Begin each cutting season with a sharp blade. Periodically file down nicks.

STARTING, STOPPING, AND SELF–PROPELLING

1. CONTROLS—Throttle control and blade/self–propelled control bar are on upper handle (Fig. 9). Ground speed control is located at rear of belt cover (Fig. 10). Recoil starter is on top of engine.

2. Push spark plug wire onto spark plug.

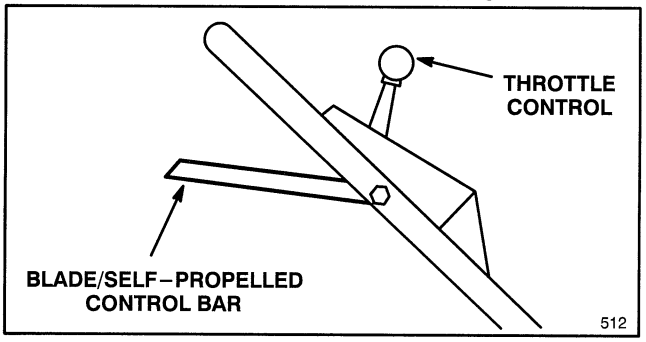

Figure 9

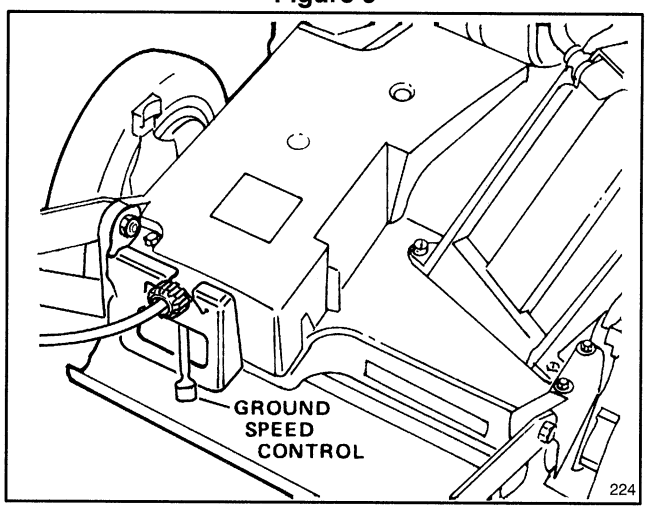

Figure 10

3. STARTING—Move ground speed control to neutral and throttle to ⚿ (CHOKE). Cover hole in center of primer with thumb and push once. Brace yourself and mower securely by placing your foot on the top left side of mower housing. Pull recoil starter out until positive engagement results; then pull vigorously to start the engine. Regulate throttle as desired when engine starts.

NOTE: When starting a warm engine, ⚿ (CHOKE) may not be necessary.

4. BLADE AND TRACTION OPERATION (Fig. 11)—When control bar is in position "A", slide control bar to right and raise to position "B" to engage blade. Squeeze control bar against handle to position "C" to drive. To disengage traction drive but keep blade engaged, gradually release control bar to position "B". To self–propel with blade disengaged, simply squeeze control bar against handle to position "C", without sliding control bar to right.

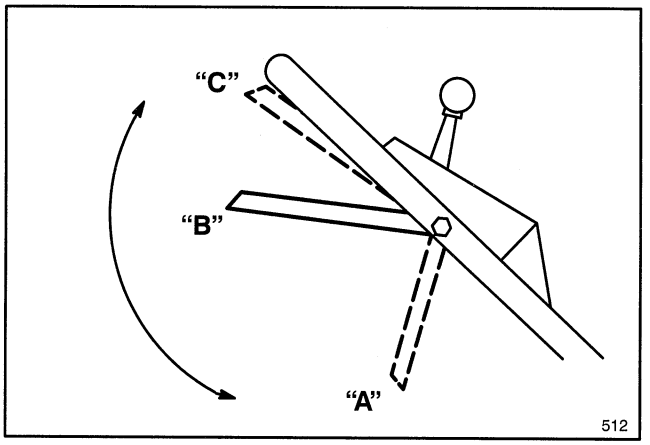

Figure 11

5. STOPPING—To stop engine, release control bar and move throttle to ⊗ (OFF). Pull wire off spark plug if mower will be unattended or not used.

USING DISCHARGE TUNNEL PLUG

1. Make sure engine is off. Open the discharge door by pulling forward on the handle and moving it rearwards (Fig. 12). Hold the discharge door handle to prevent the spring–loaded door from closing while inserting the plug.

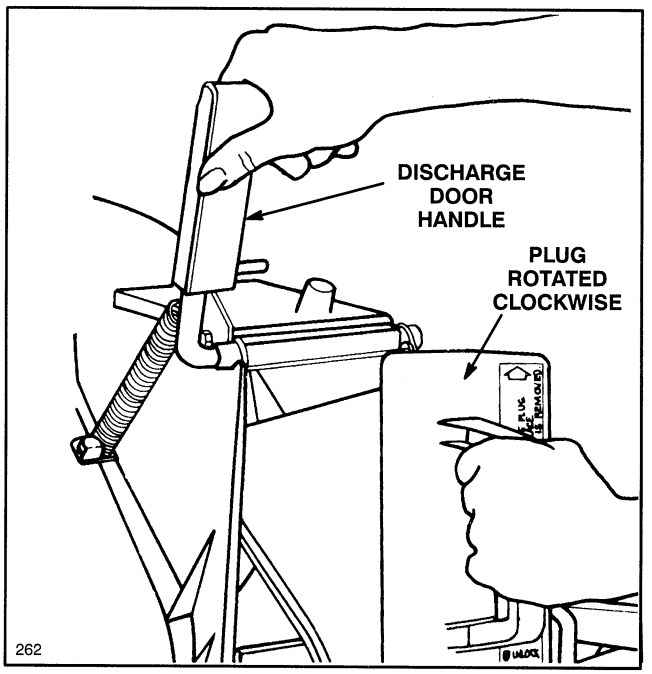

Figure 12

2. Since the plug is slightly wider than the discharge tunnel opening, you must rotate the plug clockwise slightly while inserting it (Fig. 12). Make sure the arrow on the plug decal is pointing upwards.

3. Push the plug all the way in until the spring clip on the bottom of the plug clicks into place, locking the plug securely into the discharge tunnel (Fig. 13). Release the discharge door handle to lock the top of the plug.

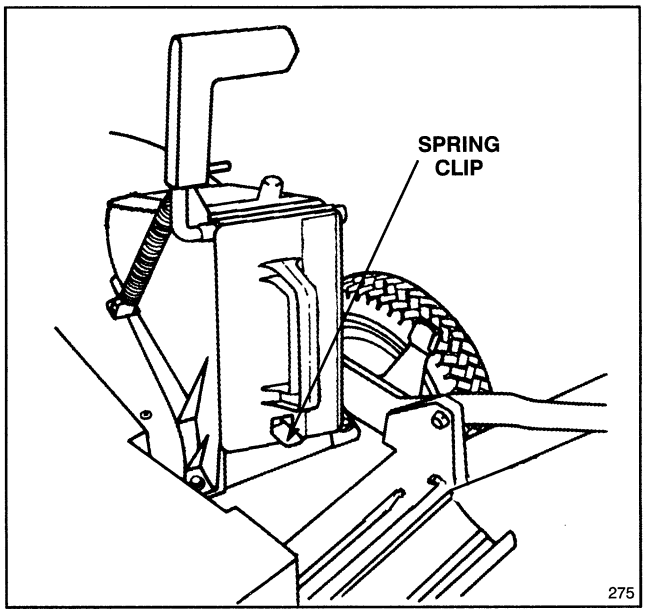

Figure 13

4. To remove the plug, move the discharge door handle rearwards while at the same time lift up the spring clip on the bottom of the plug. When the plug is unlocked, pull it out of the discharge tunnel.

Note: When grass is thick and lush, clippings may collect on and around the discharge tunnel plug. This may make plug removal difficult. Clean plug thoroughly after each use. Refer to Cleaning Mower Housing, Discharge Tunnel, Belt Cover, and Discharge Tunnel Plug, page 15.

USING GRASS BAG

Occasionally you may wish to use the grass bag for bagging extra long grass, lush grass or leaves.

1. Stop engine and wait for all moving parts to stop.

2. Ensure discharge door handle is fully forward and pin is engaged in catch (Fig. 14).

3. INSTALLING BAG—Slide hole in bag frame onto retaining post on discharge tunnel (Fig. 14). Set rear of bag frame onto support rod.

4. Pull discharge door handle forward until pin clears catch and move handle rearward until pin locks in bag notch (Fig. 15). Discharge door in mower housing is now open.

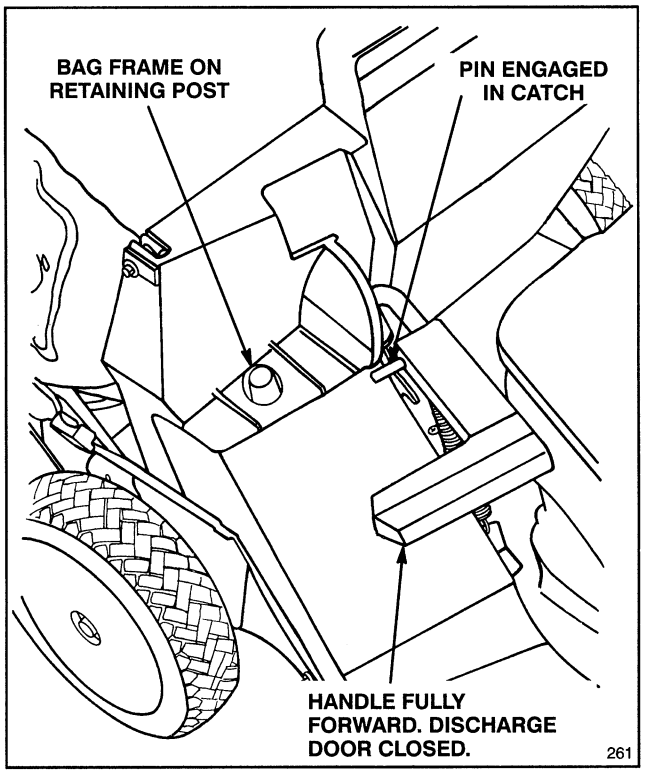

Figure 14

⚠ DANGER

- **Grass clippings and other objects can be thrown from an open discharge tunnel.**
- **Objects thrown with enough force could cause serious personal injury or death to operator or bystander.**
- **Never open door on discharge tunnel when engine is running unless the grass bag, optional side discharge attachment or discharge tunnel plug is securely installed.**

⚠ DANGER

- **A worn grass bag could allow small stones and other similar debris to be thrown in operator's or bystander's direction.**
- **Thrown objects can cause serious personal injury or death to operator or bystanders.**
- **Check the grass bag frequently. If it is damaged, install a new genuine TORO replacement bag.**

OPERATING INSTRUCTIONS

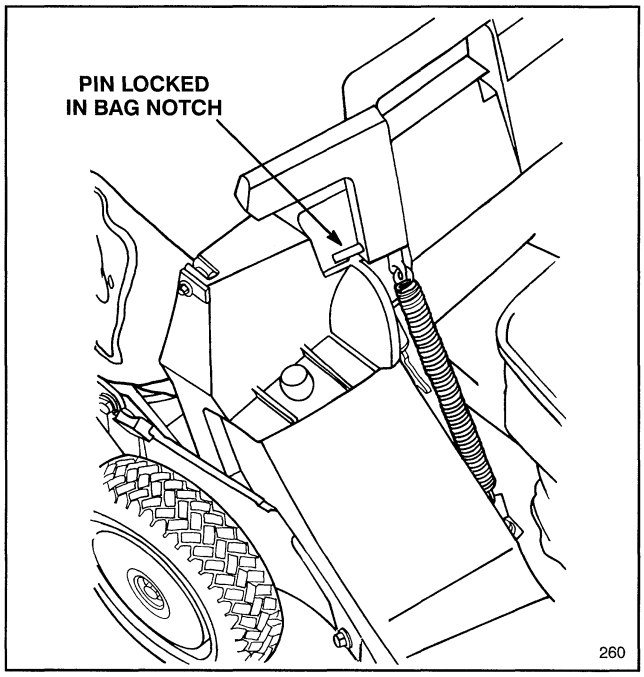

Figure 15

DANGER

- **Thrown objects may result if discharge door does not close completely.**
- **Thrown objects can cause serious personal injury or death.**
- **If discharge door cannot be closed because grass clippings clog discharge area, stop engine and gently move discharge door handle back and forth until door can be closed completely. If door still cannot be closed, remove obstruction with a stick, not your hand.**

5. EMPTYING BAG—Stop engine and wait for all moving parts to stop. Raise discharge door handle and move it forward to engage the locking pin with catch (Fig. 14). Grasp handles at front and rear of bag and lift bag off mower. Gradually tip bag forward to empty clippings.

6. To reinstall bag, repeat steps 3-4.

ADJUSTING HEIGHT–OF–CUT

The height-of-cut is adjustable from approximately 3/4 to 3-1/4 inches (19 mm to 83 mm), in 1/2 inch (12.7 mm) increments (Fig. 16). Moving height-of-cut adjuster forward raises height-of-cut.

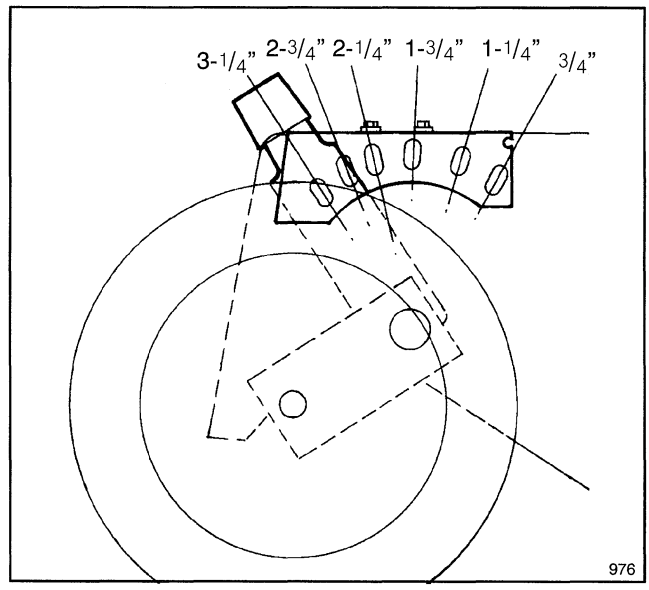

Figure 16

DANGER

- **Adjusting height-of-cut levers could bring hands into contact with moving blade.**
- **Contact with blade could cause serious personal injury.**
- **Stop engine and wait for all moving parts to stop before changing height-of-cut.**
- **Do not put fingers under housing to lift mower when adjusting height-of-cut levers.**

1. Stop the engine and wait for all moving parts to stop.

2. For easier adjustment, lift housing up so wheel is off ground. **Do not place hands under deck to lift housing.** Squeeze adjusting lever toward wheel (Fig. 17) and move it to the desired setting. Assure pin on adjusting lever engages notch in mower housing wear plate. Adjust all wheels to the same setting.

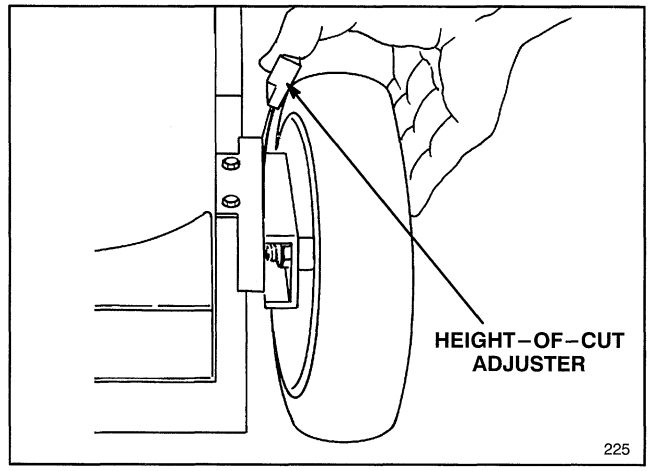

Figure 17

MAINTENANCE

⚠ CAUTION

- **Engine could start accidentally.**
- **Accidental starting of engine could cause serious injury to operator or bystanders.**
- **Pull wire off spark plug before performing any maintenance or adjustments.**

SERVICING AIR CLEANER

Normally, clean air cleaner after every 25 operating hours. More frequent cleaning is required when mower is operated in dusty or dirty conditions.

1. Stop engine and pull wire off spark plug (Fig. 18).
2. Lift tabs at top of air cleaner cover and pivot cover down. Clean cover thoroughly.
3. If outside of foam element is dirty, remove it from air cleaner body. Clean thoroughly.

A. WASH foam element in a solution of liquid soap and warm water. Squeeze to remove dirt, but do not twist because foam may tear. Rinse thoroughly in clear water.

B. DRY by wrapping in a clean rag. Squeeze rag and foam element to dry.

C. SATURATE element with engine oil. Squeeze element to remove excess oil and to distribute oil thoroughly. A damp element is desirable.

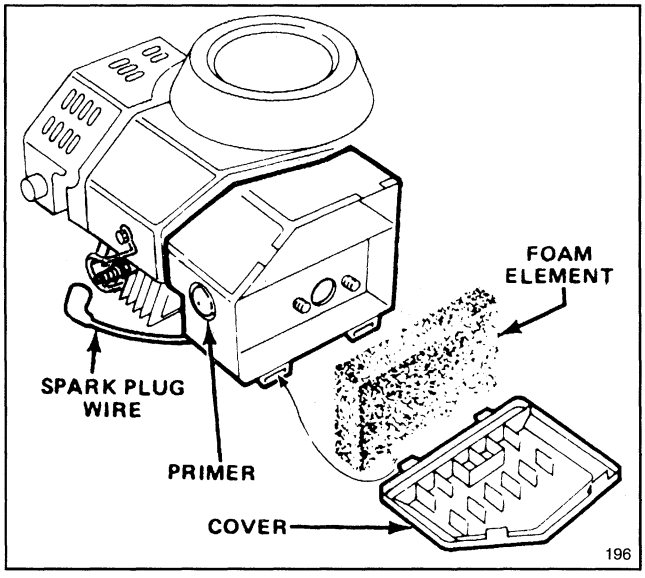

Figure 18

4. Reinstall foam element and air cleaner cover.

IMPORTANT: Do not operate engine without air cleaner element because extreme engine wear and damage will likely result.

REPLACING SPARK PLUG

Use an NGK BPMR4A spark plug or equivalent. Correct air gap is 0.032" (0.81 mm). Remove plug after every 25 operating hours and check its condition.

1. Stop engine and pull wire off spark plug (Fig. 18).
2. Clean around spark plug and remove plug from cylinder head.

IMPORTANT: Replace a cracked, fouled, or dirty spark plug. Do not sand blast, scrape, or clean electrodes because engine damage could result from grit entering cylinder.

3. Set air gap at 0.032" (0.81 mm) (Fig. 19). Install correctly gapped spark plug and gasket seal. Tighten plug firmly to 10 ft–lb (13.6 N·m).

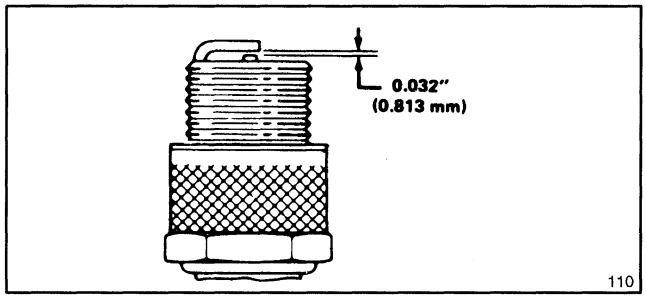

Figure 19

DRAINING GASOLINE

1. Stop engine and pull wire off spark plug (Fig. 18).

Note: Drain gasoline from a cold engine only.

2. Remove cap from fuel tank and use pump–type syphon to drain fuel into clean gas can.

Note: This is the only procedure recommended for draining fuel.

ADJUSTING THROTTLE

Throttle control adjustment may be required if engine does not start. Whenever a new throttle control cable is installed, throttle must be adjusted.

1. Stop engine and pull wire off spark plug (Fig. 18).
2. Move throttle control to 🐇 (FAST) position.
3. Loosen cable clamp screw until throttle cable slides (Fig. 20).
4. Check to see if holes in throttle bracket and choke lever are aligned (Fig. 20). If not, follow adjustment procedure in step 5.
5. ADJUSTMENT—A small diameter pin may be inserted into aligned holes to hold adjustment. Push throttle cable until throttle lever contacts choke lever (Fig. 20). Tighten cable clamp screw. Remove pin if used.

MAINTENANCE

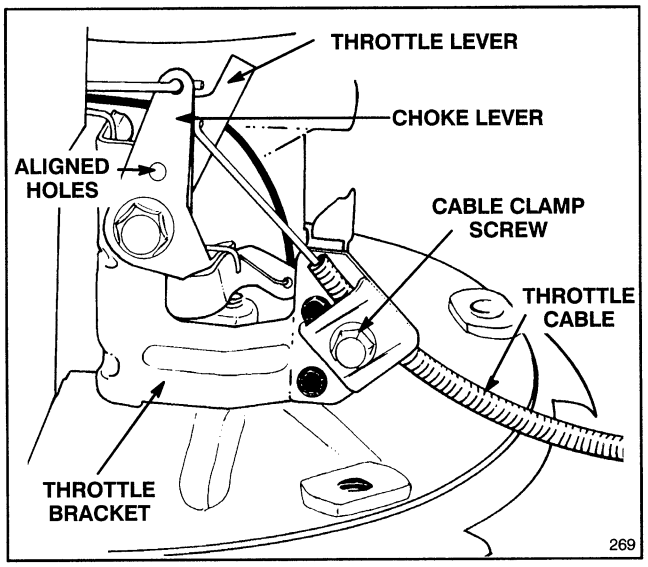

Figure 20

CLEANING COOLING SYSTEM

After every 75 operating hours, clean dirt and chaff from cylinder, cylinder head fins and from around carburetor and linkage. Also remove debris from air intake slots on recoil housing. This will assure proper cooling and optimum engine performance.

CLEANING MUFFLER AND EXHAUST PORT

Clean end of muffler pipe and exhaust port after every 75 hours of operation.

⚠ CAUTION

- **Muffler and engine surface become hot when mower is in operation.**
- **Contact with hot muffler surface could cause a burn.**
- **Clean muffler and exhaust port only after engine and muffler are cool.**

1. Stop engine and remove wire from spark plug.

2. Use hard wood scraper and remove carbon from end of muffler pipe (Fig. 21).

3. Remove screw, two nuts, and lockwashers (Fig. 21). Slide muffler off mounting pins.

4. Slowly pull recoil starter so piston covers exhaust port (Fig. 22).

5. Clean carbon from exhaust port (Fig. 22) with flat, hard wood scraper.

IMPORTANT: Do not use a metal scraper or similar object to clean exhaust port because accidental damage to the piston or cylinder could easily occur.

6. Reinstall muffler with screw, (2) nuts and lockwashers (Fig. 22). After cleaning exhaust port, make sure muffler gasket is still usable.

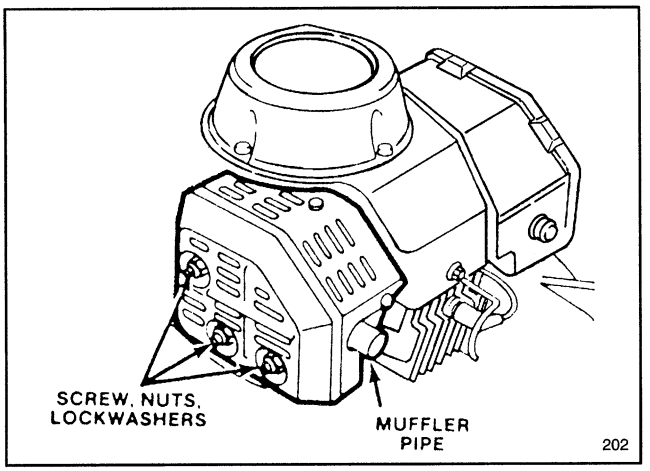

Figure 21

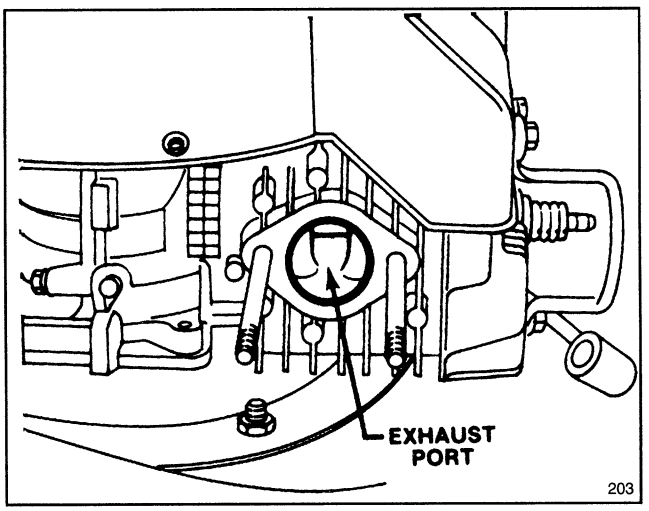

Figure 22

ADJUSTING WHEEL DRIVE

If mower does not self–propel or self–propels when control bar is **more** than 1 1/2 inches from the handle, adjust wheel drive control knob on rear of gear box.

1. Close door in mower housing and remove bag.

2. ADJUSTMENT (Fig. 23)—Rotate control knob clockwise 1/2 turn if mower does not self–propel. If mower creeps forward, rotate knob 1/2 turn counterclockwise to loosen belt.

MAINTENANCE

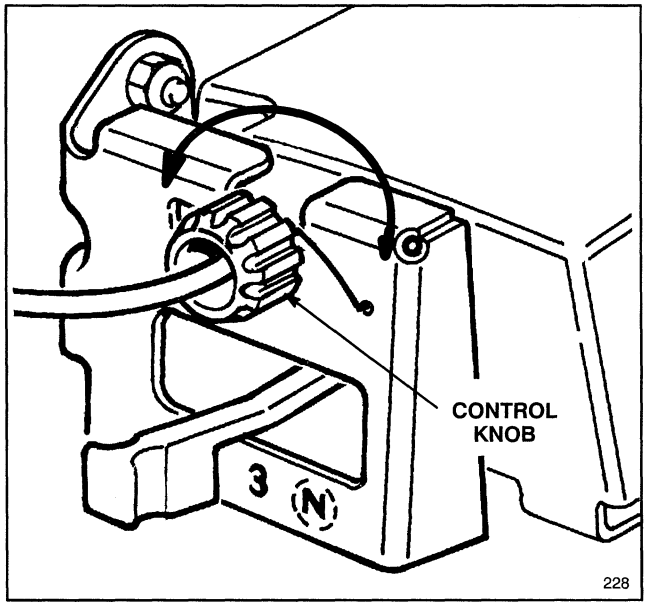

Figure 23

3. CHECK ADJUSTMENT—Slowly pull mower backward while control bar is gradually moved toward handle. Adjustment is correct when rear wheels stop turning and control bar is about 1–inch from handle (Fig. 24).

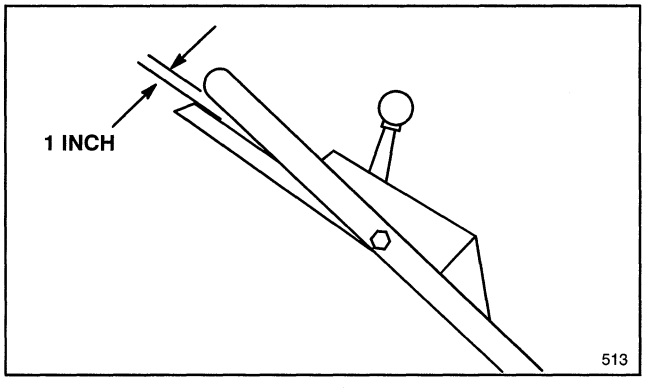

Figure 24

INSPECTING/REMOVING/SHARPENING BLADE

Always mow with a sharp blade. A sharp blade cuts cleanly and without tearing or shredding the grass blades like a dull blade.

1. Stop engine and wait for all moving parts to stop. Pull wire off spark plug (Fig. 18).

2. Drain gasoline from fuel tank; refer to Draining Gasoline, page 11.

3. Tip mower on its right side (Fig. 25).

⚠ CAUTION

- **Engine could start accidentally.**
- **Accidental starting of engine could cause serious injury to operator or bystanders.**
- **Do not attempt to inspect, remove or replace blade without first removing the spark plug wire from spark plug and fastening it away from accidental contact with spark plug.**

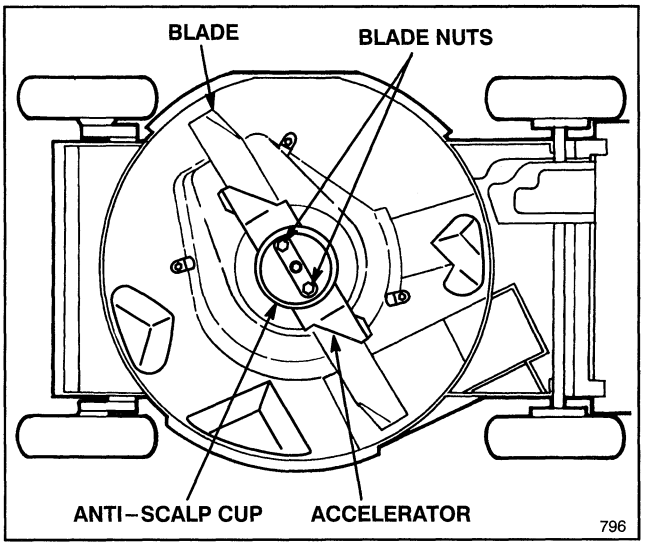

Figure 25

4. INSPECTING BLADE—Carefully examine blade for sharpness and wear, especially where flat and curved parts meet (Fig. 26A). Since sand and abrasive material can wear away the metal that connects the flat and curved parts of the blade, check blade before using the mower. If a slot or wear is noticed, (Fig. 26B & C), replace blade. Refer to step 5.

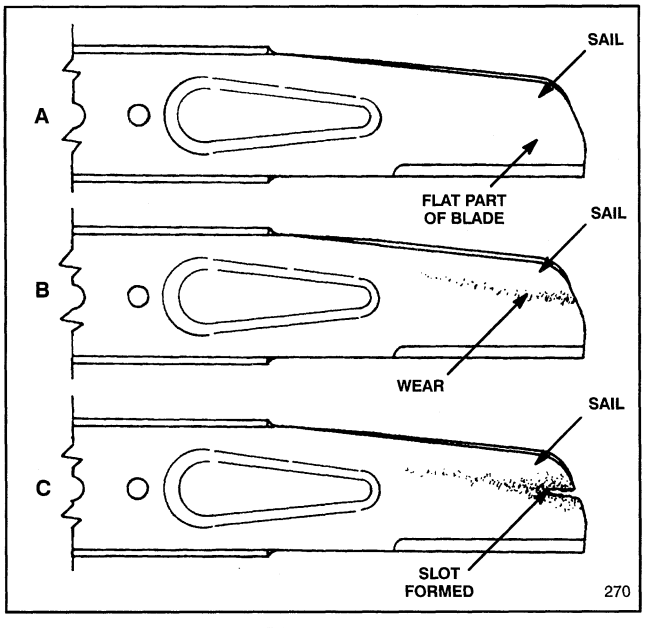

Figure 26

MAINTENANCE

Note: For best performance, install new blade before cutting season begins. During the year, file down small nicks to maintain the cutting edge.

⚠ DANGER

- **A worn or damaged blade could break and a piece of blade could be thrown into operator's or bystander's area.**
- **A thrown piece of blade could cause serious personal injury or death to operator or bystanders.**
- **Inspect blade periodically for wear or damage.**
- **Replace a worn or damaged blade.**

5. REMOVING BLADE—Grasp end of blade using a rag or thickly padded glove. Remove blade nuts, anti–scalp cup, accelerator, and blade (Fig. 25).

6. SHARPENING BLADE—Using a file, sharpen top side of blade and maintain original cutting angle (Fig. 27). The blade will remain balanced if same amount of material is removed from both cutting edges.

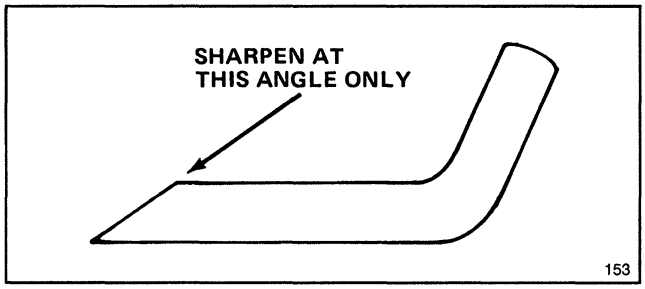

Figure 27

IMPORTANT: Check balance of blade by putting it on a blade balancer. An inexpensive balancer can be purchased at a hardware store. A balanced blade stays in a horizontal position and an unbalanced blade settles to the heavy side. If blade is not balanced, file more metal off cutting edge on heavy end of blade.

7. Reinstall sharp, balanced blade, accelerator, anti–scalp cup, and blade nuts. Sail part of blade must point toward top of mower housing to assure correct installation. Tighten blade bolt to 15–27 ft–lb (20–37 N·m).

⚠ WARNING

- **Operating mower without accelerator in place could cause blade to flex, bend or break.**
- **A broken blade could cause serious injury or death to operator or bystanders.**
- **Do not operate mower without accelerator.**

LUBRICATION

After every 25 operating hours or when season ends, pivot arms must be lubricated.

1. Move rear wheel height–of–cut levers to center setting. Wipe grease fittings with clean rag (Fig. 28). Install grease gun onto fitting and gently apply 2 or 3 pumps of #2 Multi–Purpose Lithium Base Grease. Excessive grease pressure may damage seals.

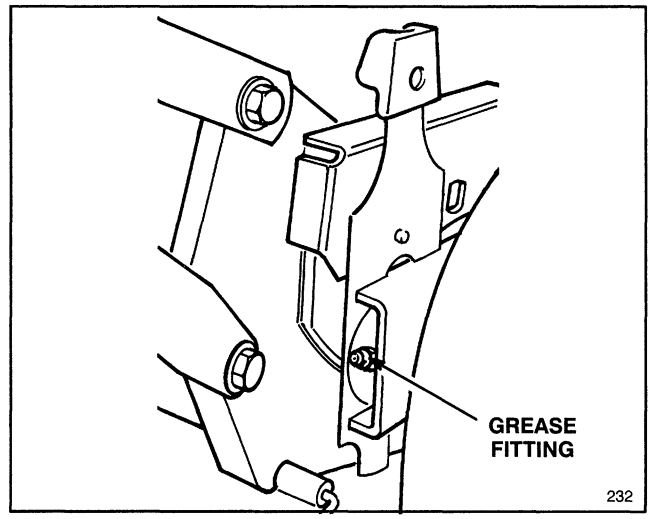

Figure 28

LUBRICATING GEAR CASE

After every 100 operating hours, grease the gear case with #2 Multi–Purpose Lithium Base Grease.

1. Remove bag.

2. Install grease gun onto fitting thru belt cover opening (Fig. 29). Gently apply 1–2 pumps of grease.

3. Reinstall bag.

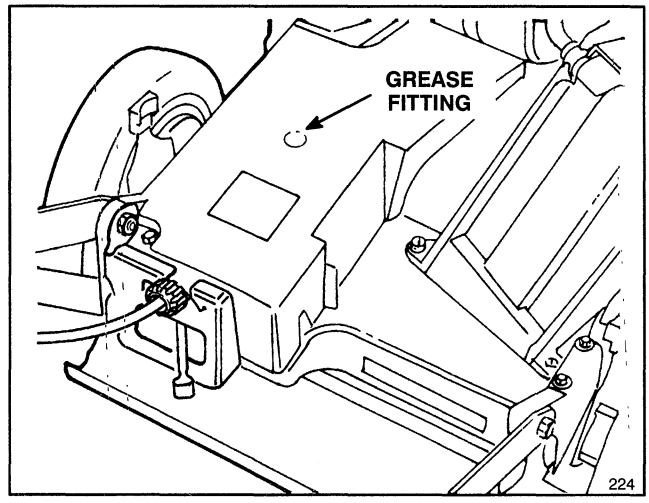

Figure 29

MAINTENANCE

ADJUSTING BLADE BRAKE CABLE

Whenever a new blade brake cable assembly is installed or the blade brake belt is replaced, the blade brake cable should be adjusted.

1. Stop engine and wait for all moving parts to stop. Pull wire off spark plug (Fig. 18).

2. Loosen cable clamp screw until brake cable conduit slides (Fig. 30). Pull cable to remove slack, but do not put tension on spring. Tighten screw to lock adjustment in place.

⚠ WARNING

- **Do not over–tighten blade brake cable. Over–tightening could cause blade brake to be pulled off brake drum. If brake does not contact drum, blade will not stop rotating when control bar is released.**
- **A rotating blade could cause serious personal injury.**
- **Check the blade brake mechanism each time brake cable is adjusted to ensure brake is stopping blade in 3 seconds or less.**
- **If blade does not stop rotating in 3 seconds or less, bring unit to your local Authorized Toro Service Dealer for inspection and repair.**

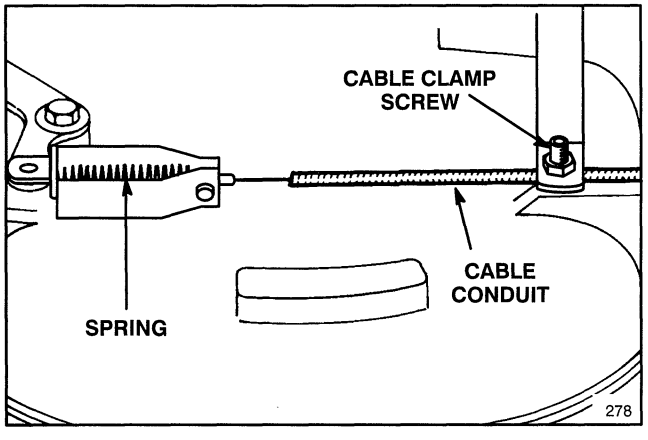

Figure 30

CLEANING MOWER

Plug

To ensure best performance, the discharge tunnel plug must be cleaned after each use. When grass is thick and lush, clippings may collect on and around the plug; this may make plug removal difficult. After each use, remove plug from discharge tunnel and clean off all debris.

Discharge Tunnel

Always be sure that discharge tunnel door closes securely when handle is released. If debris prevents discharge door from closing securely, clean inside of discharge tunnel and door thoroughly.

⚠ WARNING

- **Grass clippings and other objects can be thrown from an open discharge tunnel.**
- **Thrown objects can cause serious injury or kill operator or bystanders.**
- **Never start or operate the mower unless <u>one</u> of the following is true:**

  1. The discharge tunnel plug is locked securely in discharge tunnel.

  2. The grass bag is locked in place.

  3. The optional side discharge chute is locked in place.

  4. The discharge tunnel door is locked closed.

Underside of Mower Housing

Keep underside of mower housing clean. Be especially careful to keep kickers free of debris (Fig. 32).

<u>Washing Method</u>

After every use, follow this procedure for washing debris out from the underside of the mower housing.

1. Position mower on a flat surface near a garden hose.

2. Start the engine.

3. Engage the blade.

4. Hold the running garden hose at handle level and direct water to flow on ground just in front of right rear tire (Fig. 31). The rotating blade will draw water under the housing and wash out clippings. Let the water run for a few minutes or until you no longer see clippings being washed out from under housing.

MAINTENANCE

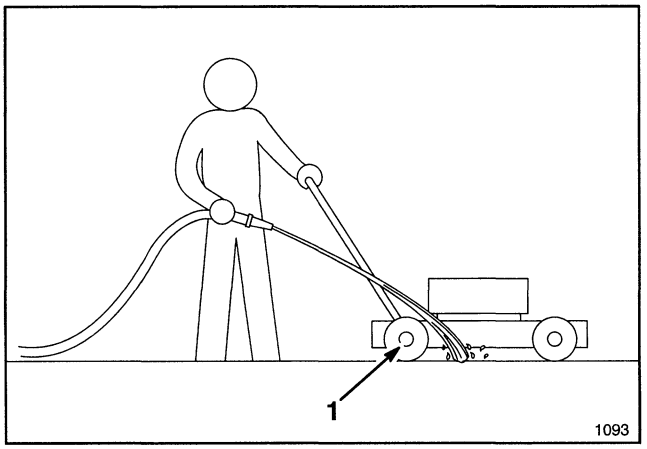

Figure 31

1. Right rear wheel

5. Disengage the blade.

6. Turn off the garden hose.

7. Restart mower and let it run for a few minutes to dry out moisture on the mower and its components. While the engine is running, engage and disengage the safety system and traction drive several times to dry them out.

Scraping Method

If washing does not remove all debris from under deck, tip mower and scrape it clean.

1. Pull wire off spark plug. Remove key from switch on electric start models.

2. Drain gasoline from fuel tank: refer to Draining Gasoline, page 11.

3. Tip mower on its right side (Fig. 32).

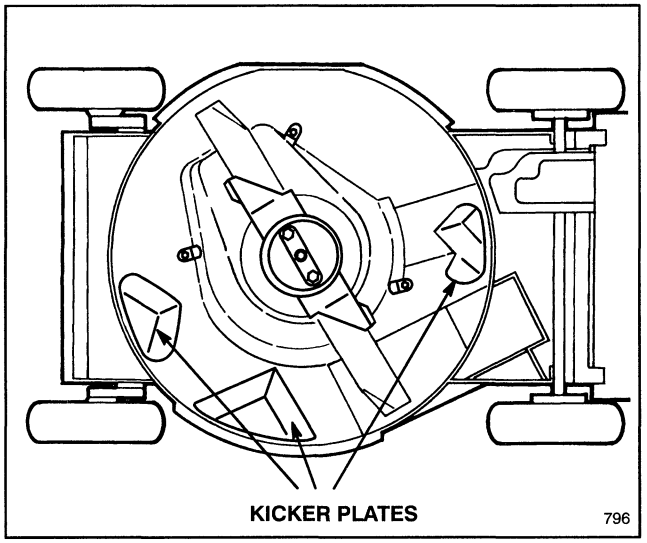

Figure 32

4. Remove dirt and grass clippings with a hard-wood scraper. Avoid burrs and sharp edges.

5. Turn mower upright.

6. Refill gas tank.

7. Reconnect spark plug wire.

Belt Cover

Keep area under belt cover free of debris.

1. Remove bolts securing belt cover (Fig. 33) to mower housing. Lift off cover and brush out all debris from belt area. Reinstall belt cover.

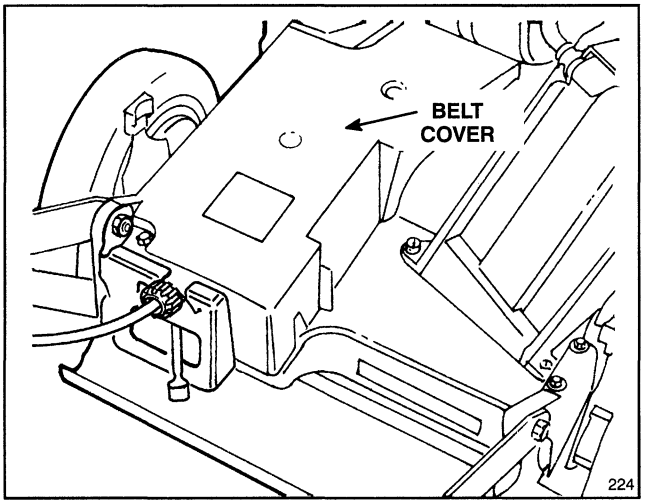

Figure 33

CLEANING BLADE BRAKE CLUTCH SHIELD

The BBC (Blade Brake Clutch) shield should be cleaned periodically during the mowing season and at the end of each mowing season to ensure best performance and to prevents parts degradation. It is convenient to clean the BBC shield at the same time the blade is being sharpened because the blade needs to be removed in order to remove the BBC shield.

1. Stop engine and wait for all moving parts to stop. Pull wire off spark plug (Fig. 18).

2. Drain gasoline from fuel tank; refer to Draining Gasoline, page 11.

3. Tip mower on its right side.

4. Remove (2) blade nuts, anti–scalp cup, accelerator, and blade (Fig. 34).

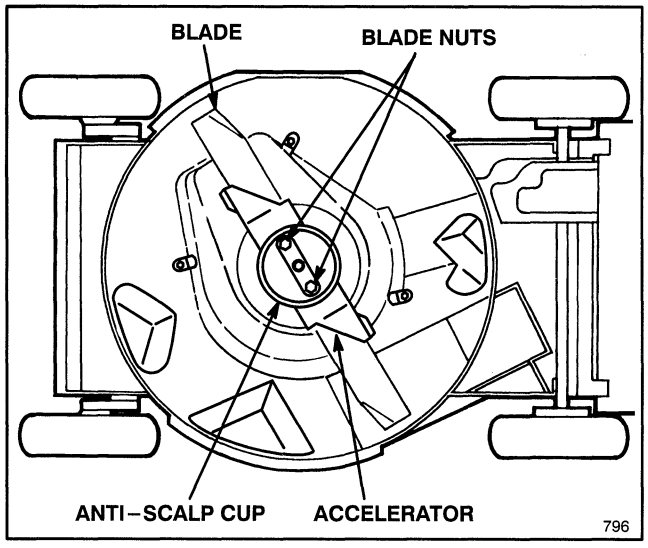

Figure 34

5. Loosen tabs securing BBC shield to deck by loosening nuts or bolts on tabs (Fig. 35). Rotate tabs 180° to move them out of the way.

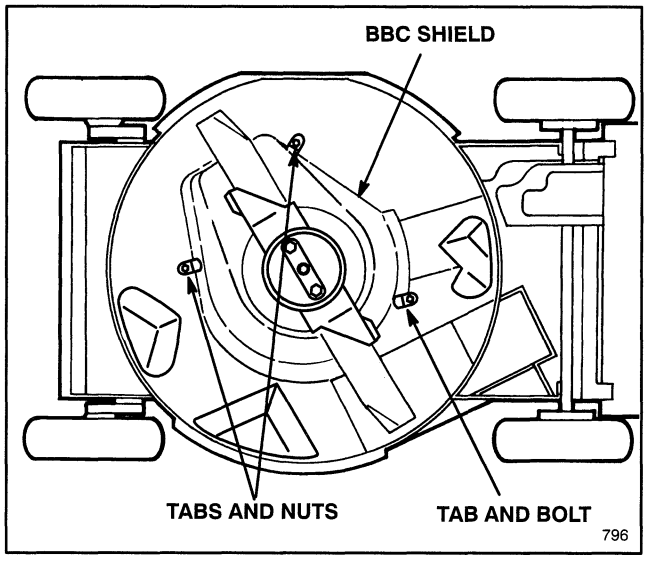

Figure 35

6. Remove BBC shield and brush or blow all debris from under shield and around BBC system.

7. Reinstall BBC shield. Rotate tabs 180° back into position. Tighten nuts or bolts on tabs to secure BBC shield to deck.

8. Reinstall blade, accelerator, anti-scalp cup, and (2) blade nuts.

9. Turn mower upright.

10. Reinstall spark plug wire on spark plug.

SERVICING WHEELS (Fig. 36)

Removal

1. Stop engine and wait for all moving parts to stop. Pull wire off spark plug (Fig. 18).

2. Remove capscrew, wheel spacer, and locknut mounting wheel to pivot arm.

3. Separate wheel halves from tire by removing (4) capscrews and locknuts.

Note: If bearings are to be removed from bearing/hub assembly, remove by pressing on bearing spacer.

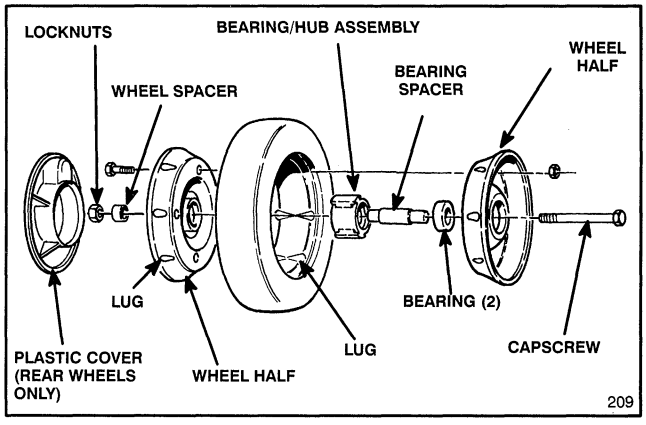

Figure 36

Assembly

1. Position tire onto (1) wheel half aligning lugs on each.

2. Place bearing/hub assembly into center hole of wheel half. Make sure legs of hub are positioned over flange of hole.

3. Place other wheel half onto bearing/hub assembly, aligning wheel and tire lugs and mounting holes.

4. Using (2) 1/4-20 x 1.50" lg. fully threaded screws or bolts and non-locking nuts, loosely secure wheel halves together. Mount screws or bolts in opposing holes.

5. Check alignment of all parts and tighten screws, alternating from side to side for a uniform fit, until wheel halves are drawn together.

6. Install (2) capscrews and locknuts, previously removed, in remaining holes in wheel halves and tighten. Remove (2) long screws or bolts and replace with (2) capscrews and locknuts.

7. Reinstall wheel to pivot arm with capscrews, spacer, and locknut. Make sure spacer is positioned between wheel hub and pivot arm.

MAINTENANCE

PREPARING MOWER FOR STORAGE

1. For long term storage, either drain gasoline from fuel tank or add a fuel stabilizer to the gasoline. To drain gasoline, refer to Draining Gasoline, page 11. After fuel is drained, start engine and let it idle until all fuel is consumed and engine stops. Repeat the starting procedure two more times to assure all gas is removed from the engine. If gasoline is not drained, gum–like varnish deposits will form and cause poor engine operation, even starting problems.

Fuel can be left in gas tank only if a fuel additive, such as Toro's Stabilizer/Conditioner, is added to gasoline and run through engine before storing. Toro's Stabilizer/Conditioner is a petroleum distillate based conditioner/stabilizer. Toro does not recommend stabilizers with an alcohol base, such as ethanol, methanol or isopropyl. Use fuel additive in recommended quantities as specified on container.

Under normal conditions, fuel additives remain effective in fuel for 6–8 months.

2. Remove spark plug and pour 2 teaspoons of Toro Two–Cycle oil into hole in cylinder. Pull starter rope slowly to coat inside of cylinder. Install spark plug and tighten to 10 ft–lb (13.6 N·m). **DO NOT INSTALL WIRE ON SPARK PLUG.**

3. Clean underside of housing: refer to Cleaning Mower, page 15.

4. Check condition of blade: refer to Inspecting/Removing/Sharpening Blade, page 13.

5. Tighten all nuts, bolts, and screws.

6. Clean dirt and chaff from cylinder, cylinder head fins, and blower housing. Also remove grass clippings, dirt, and grime from external parts of the engine, shrouding, and top of mower housing.

7. Clean BBC shield: refer to Cleaning Blade Brake Clutch Shield, page 16.

8. Clean air cleaner: refer to Servicing Air Cleaner, page 11.

9. Lubricate the pivot arms: refer to Lubrication, page 14.

10. Touch up all rusted or chipped paint surfaces. Toro Re–Kote paint is available from an Authorized TORO Service Dealer.

11. Store mower in a clean, dry place, out of the reach of children. Cover mower to keep it clean and protected.

OPTIONAL EQUIPMENT

For special conditions, the following accessories may be purchased at your local Authorized Toro Service Dealer.

1. Side Discharge Kit, Model No. 59168—Installs in seconds. Rear mounted in place of the grass bag or discharge tunnel plug. Disperses clippings while trimming on both sides (Fig. 37).

2. Spark Arrestor (Part No. 81–0200)—If a spark arrestor is required because of local, state, or federal regulations, it may be purchased at your local Authorized TORO Service Dealer. Clean screen after every 75 hours of operation. If mower is operated on any California forest, brush, or grass covered land without a properly operating spark arrestor, the operator is violating state law, Section 4442 Public Resources Code.

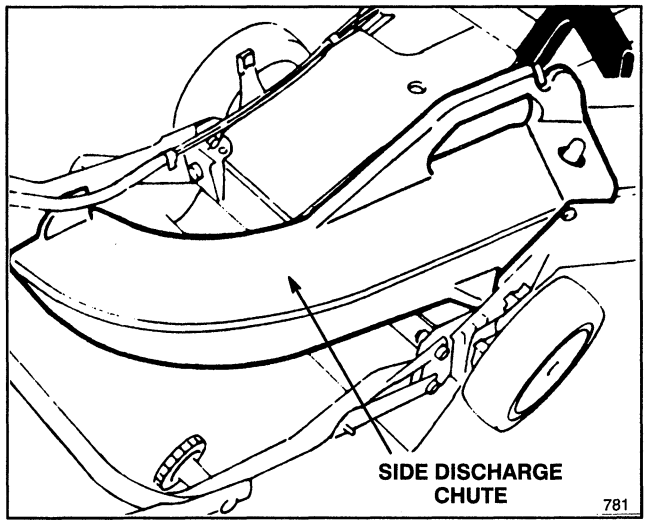

Figure 37

TORO SERVICE SUPPORT

If help – concerning safety, set–up, operation, maintenance, or troubleshooting – is ever needed, contact the local Authorized TORO Service Dealer or Distributor. Refer to the "Yellow Pages" for assistance. In addition to skilled service technicians, the dealer and distributor have factory approved accessories and replacement parts. Keep your Toro all TORO. Buy genuine TORO replacement parts and accessories.

PRODUCT IDENTIFICATION

The model and serial number decal/tag is located at rear of mower housing, near the discharge door. Always refer to specific numbers on this decal in correspondence or when replacement parts are needed.

TORO Consumer Products

THE TORO TOTAL COVERAGE GUARANTEE

A Full Warranty

(Limited Warranty for Commercial Use)

What Is Covered By This Express Warranty?

The Toro Company promises to repair any TORO Product used for residential purposes if defective in materials or workmanship for the following time periods from the date of purchase:

- Super Recycler® Walk Mowers . 5 year full warranty
- All Others ..... 2 year full warranty

The cost of parts and labor are included, but the customer pays the transportation costs.

Transportation within a 15 mile radius of the servicing dealer is covered under this warranty for two–stage snowthrowers, walk behind debris equipment and all TORO Wheel Horse riding products. Walk power mowers, single stage snowthrowers, and other products not specifically covered, are excluded from the transportation coverage provided by this warranty.

What Products Are Covered By This Warranty?

This warranty applies to all gasoline powered Consumer Products (including TORO Wheel Horse riding products). ProLine riding products and wide area walk behind mowers are covered by separate warranty statements.

How About Commercial Use?

TORO Consumer Products used for commercial, institutional or rental use are covered by a limited warranty for the following time periods from the date of purchase:

Products	Warranty Period
• Garden Tractors	
Chassis	1 year limited warranty
Engine	2 year limited warranty
• 21" Commercial Duty Walk Mowers	1 year limited warranty
• Lawn Tractors, Yard Tractors, Rear Engine Riders, Straight Shaft Trimmers, and Backpack Blowers	90 day limited warranty
• All Others	45 day limited warranty

How Do You Get Warranty Service?

Should you feel your TORO product contains a defect in material or workmanship, contact the dealer who sold you the product or any Authorized TORO Service Dealer or TORO Master Service Dealer. The Yellow Pages of your telephone directory is a good reference source. The dealer will either arrange service at his/her dealership or recommend another Authorized Service Dealer who may be more convenient. You may need proof of purchase (copy of registration card, sales receipt, etc.) for warranty validation.

If for any reason you are dissatisfied with the Service Dealer's analysis of the defect in materials or workmanship or if you need a referral to a TORO Service Dealer, please feel free to contact us at the following address:

Toro Customer Service Department
8111 Lyndale Avenue South
Bloomington, MN 55420–1196
612–888–8801
1–800–348–2424

What Must You Do To Keep The Warranty In Effect?

You must maintain your TORO Product by following the maintenance procedures described in the operator's manual. Such routine maintenance, whether performed by a dealer or by you, is at your expense.

What Does This Warranty Not Cover? and How Does Your State Law Relate To This Warranty?

There is no other express warranty except the TORO Starting Guarantee on GTS Engines. This express warranty does not cover:

- Cost of regular maintenance service or parts, such as filters, fuel, lubricants, tune–up parts, blade sharpening, brake and clutch adjustments.
- Any product or part which has been altered or misused or required replacement or repair due to normal wear, accidents, or lack of proper maintenance.
- Repairs necessary due to improper fuel, contaminants in the fuel system, or failure to properly prepare the fuel system prior to any period of non–use over three months.
- Pickup and delivery charges for distances beyond a 15 mile radius from an Authorized TORO Service Dealer (covered products only).

All repairs covered by this warranty must be performed by an Authorized TORO Service Dealer using Toro approved replacement parts.

Repair by an Authorized TORO Service Dealer is your sole remedy under this warranty.

The Toro Company is not liable for indirect, incidental or consequential damages in connection with the use of the TORO Products covered by this warranty, including any cost or expense of providing substitute equipment or service during reasonable periods of malfunction or non–use pending completion of repairs under this warranty. Some states do not allow exclusions of incidental or consequential damages, so the above exclusion may not apply to you.

This warranty gives you specific legal rights, and you may also have other rights which vary from state to state.

COUNTRIES OTHER THAN THE UNITED STATES OR CANADA

Customers who have purchased TORO products exported from the United States or Canada should contact their TORO Distributor (Dealer) to obtain guarantee policies for your country, province, or state. If for any reason you are dissatisfied with your Distributor's service or have difficulty obtaining guarantee information, contact the TORO importer. If all other remedies fail, you may contact us at The Toro Company.