Form No. 3392-136 Rev A

TORO®

Count on it.

Operator's Manual

Right/Left-Hand Groomer Kit

27-inch Reelmaster® 7000-D DPA Cutting Unit

Model No. 03713

Model No. 03714

Register at www.Toro.com.
Original Instructions (EN)

CE

3392-136 A

⚠ WARNING

CALIFORNIA
Proposition 65 Warning

This product contains a chemical or chemicals known to the State of California to cause cancer, birth defects, or reproductive harm.

The engine exhaust from this product contains chemicals known to the State of California to cause cancer, birth defects, or other reproductive harm.

This product complies with all relevant European directives. For details, please see the Declaration of Incorporation (DOI) at the back of this publication.

Covered by one or more of the following patents: U.S. Patent 7,337,601 and 7,775,025

Introduction

The groomer kits are mounted to the reel mowers on a ride-on machine and is intended to be used by professional, hired operators in commercial applications. It is primarily designed for grooming grass on well-maintained lawns in parks, sports fields, and on commercial grounds.

Read this information carefully to learn how to operate and maintain your product properly and to avoid injury and product damage. You are responsible for operating the product properly and safely.

You may contact Toro directly at www.Toro.com for product safety and operation training materials, accessory information, help finding a dealer, or to register your product.

Whenever you need service, genuine Toro parts, or additional information, contact an Authorized Service Dealer or Toro Customer Service and have the model and serial numbers of your product ready. The numbers are printed on the shipping carton. Write the numbers in the space provided.

Model No. _____

Serial No. _____

This manual identifies potential hazards and has safety messages identified by the safety alert symbol (Figure 1), which signals a hazard that may cause serious injury or death if you do not follow the recommended precautions.



Figure 1

1. Safety alert symbol

This manual uses 2 other words to highlight information. **Important** calls attention to special mechanical information and **Note** emphasizes general information worthy of special attention.

© 2014—The Toro® Company
8111 Lyndale Avenue South
Bloomington, MN 55420

Contact us at www.Toro.com.
Printed in the USA.
All Rights Reserved

Contents

Safety 3
Safe Operating Practices 3
Setup 5
Tools Required for Setup 5
Installing the Groomer 6
Installing the Broomer Kit (optional) 17
Operation 18
Adjusting the Groomer Height 18
Testing the Groomer Performance 20
Maintenance 21
Cleaning 21
Lubrication 21
Inspecting the Blades 21
Groomer Pulley/Belt Alignment 21
Groomer Binding Troubleshooting 22

Safety

This machine has been designed in accordance with EN ISO 5395:2013.

Safe Operating Practices

- Read, understand, and follow all instructions in the traction unit and cutting unit operator manuals before operating the groomer.
- Read, understand, and follow all instructions in this operator's manual before operating the groomer.
- Never allow children to operate the cutting units. Do not allow adults to operate traction unit or cutting units without proper instruction. Only trained operators who have read this manual should operate the cutting units.
- Never operate the cutting units when under the influence of drugs or alcohol.
- Keep all shields and safety devices in place. If a shield, safety device or decal is illegible or damaged, repair or replace it before operation is commenced. Also tighten any loose nuts, bolts, and screws to ensure cutting unit is in safe operating condition.
- Always wear substantial, slip-resistant footwear. Do not operate cutting unit while wearing sandals, tennis shoes, sneakers or shorts. Also, do not wear loose fitting clothing which could get caught in moving parts. Always wear long pants and substantial shoes. Wearing safety glasses, safety shoes and a helmet is advisable and required by some local ordinances and insurance regulations.
- Remove all debris or other objects that might be picked up and thrown by the cutting unit blades. Keep all bystanders away from the mowing area.
- If the blades strike a solid object or the cutting unit vibrates abnormally, stop and shut the engine off. Check cutting unit for damaged parts. Repair any damage before restarting and operating the cutting unit.
- Lower the cutting units to the ground and remove key from ignition switch whenever machine is left unattended.
- Be sure cutting units and groomers are in safe operating condition by keeping nuts, bolts and screws tight.
- Remove key from ignition switch to prevent accidental starting of the engine when servicing, adjusting or storing the machine.
- Lightning can cause severe injury or death. If lightning is seen or thunder is heard in the area, do not operate the machine; seek shelter.
- Perform only those maintenance instructions described in this manual. If major repairs are ever needed or assistance is desired, contact an Authorized Toro Distributor.
- To ensure optimum performance and safety, always purchase genuine Toro replacement parts and accessories to keep the Toro all Toro. **Never use "will-fit" replacement parts and accessories made by other manufacturers.** Look for the Toro logo to assure

genuineness. Using unapproved replacement parts and accessories could void the warranty of The Toro® Company.

Setup

Loose Parts

Use the chart below to verify that all parts have been shipped.

Description	Qty.	Use
45 degree grease fitting	1	Install the Groomer
Height of cut bracket assembly, R.H.	1	
Height of cut bracket assembly, L.H.	1	
Flange lock nut, 3/8 inch	2	
Splined insert	1	
Groomer shaft assembly	1	
Shim washer (as required for belt alignment)	1	
Socket head screws, 3/8 x 1 inch	4	
Groomer belt	1	
Idler spring	1	
Rubber grommet ring (used only if rear roller brush kit is installed)	1	
Set screw (used only if rear roller brush kit is installed)	1	
Operator's Manual	1	
Parts Catalog	1	
No parts required	–	Install the Broomer Kit (optional)

Traction Unit Requirements

The Right and Left Groomer Kit Models 03713 and 03714 can be used on Reelmaster 7000-D DPA Cutting Unit Models 03710 and 03711 with or without a Rear Roller Brush Kit.

Note: Determine the left and right sides of the machine from the normal operating position.

Tools Required for Setup

- 5/16 socket
- 1/2 deep–well socket
- 9/16 deep-well socket
- 5/8 socket
- 3/8 wrench
- 1/2 wrench
- 9/16 wrench (2)
- 5/16 Allen wrench
- 5/32 mm Allen wrench
- 3/8-16 tap
- Needle nose pliers
- 6 inch ruler, Toro Part No. 114–5446
- 12 inch straight edge
- Flat screw driver
- Vise clamp pliers
- Torque wrench 15-19 ft-lb (20-26 N-m)
- Torque wrench 27-33 ft-lb (36-45 N-m)
- Torque wrench 34-40 ft-lb (46-54 N-m)
- Torque wrench 85-95 ft-lb (115-129 N-m)
- Reel drive shaft tool, Part No. TOR4074
- Blue 242 Loctite

Groomer Kit Orientation

All cutting units are shipped with the counter weight mounted to the left end of the cutting unit. Use the following diagram to determine the position of the groomer kits and reel motors.

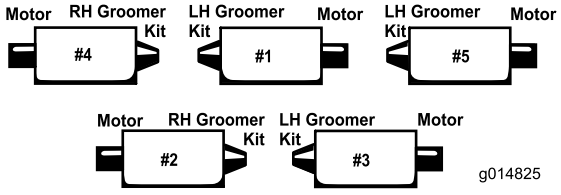

Figure 2

Note: These instructions and illustrations show the installation of the Left Hand Groomer Kit onto the cutting units with the counter weights mounted on the left end of the cutting unit. The Right Hand Groomer Kits are to be installed onto cutting units with the counter weights mounted on the right end of the cutting unit.

Note: If a groomer kit and a brush kit are going to be installed on the cutting unit, install the groomer kit first.

Use the following installation instructions if the cutting units are not equipped with rear roller brushes. If the cutting units are equipped with rear roller brushes, proceed to page 10 for the installation instructions.

Installing the Groomer

For Cutting Units Not Equipped with Rear Roller Brushes

1. Park the traction unit on a level surface and engage the parking brake.
2. Ensure that the cutting units are disengaged. Lower the cutting units to the ground. Turn the engine off and remove the key. Remove all cutting units from traction unit.

   Note: Make sure all black plastic tie straps have been removed from the groomer assemblies.
3. Remove the (2) bolts securing the counter weight to the left end of the cutting unit. Remove the counter weight (Figure 3).

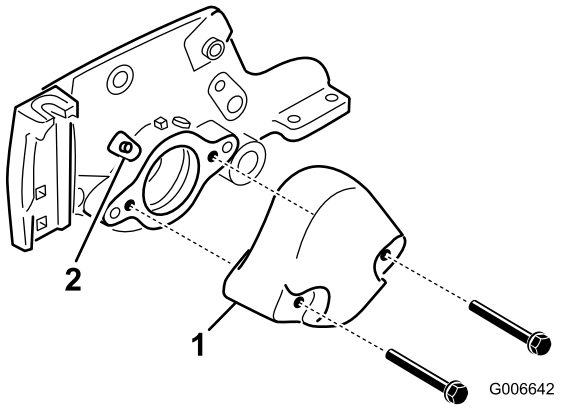

Figure 3

1. Counter weight
2. Grease fitting

4. Remove the straight grease fitting from the bearing housing and replace with the 45 degree fitting (Figure 3). Position the fitting so it points to the top of the cutting unit.
5. Remove the carriage bolts and nuts securing the height of cut brackets to the cutting unit side plates (Figure 4).

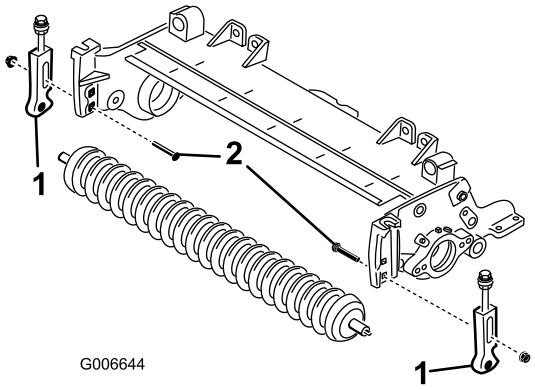

Figure 4

1. Height of cut bracket
2. Carriage bolt

6. Loosen the screws securing the height of cut brackets to the front roller shaft.
7. Remove the height of cut brackets and the front roller from the cutting unit side plates (Figure 4).
8. Loosely install the new right and left height of cut brackets to the existing front roller with new 5/16 x 1-1/8 inch capscrews and 5/16 inch flange head locknuts. Position the height of cut brackets as shown in figure Figure 6.

   Note: The left height of cut bracket is marked with an “L” and the right height of cut bracket is marked with a “R”.
9. Using the upper square hole in each side plate, loosely mount the height of cut brackets to the cutting unit side plates with the carriage bolts previously removed and (2) new 3/8 inch flange nuts, positioning as shown in figure Figure 6.

Note: The washers on the height of cut adjusting bolts must be located on each side of the flange on the side plate (Figure 5).

10. Tighten the locknut on the height of cut adjuster bolt until the washers contact the side plate flange, then back-off the nut 1/2 turn (Figure 5).

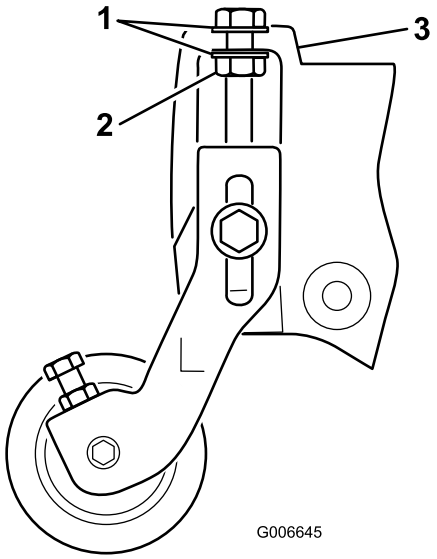

Figure 5

1. Washer
2. Locknut
3. Side plate flange

11. Center the roller between the height of cut brackets and lock it in place with the capscrews and locknuts on the brackets (Figure 6).

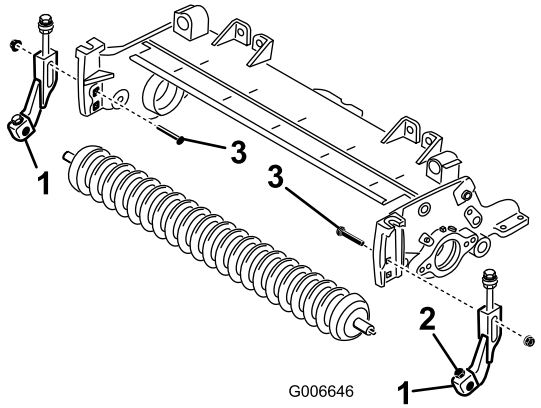

Figure 6

1. Height of cut bracket
2. Capscrew & locknut
3. Carriage bolt

12. Using the Reel Drive Shaft Tool, remove the splined insert from the reel motor end of the reel shaft (Figure 7). Use Reel drive shaft tool, Part No. TOR4074. Clean all the grease out of the threaded hole where the splined insert was.

Important: The splined insert on the left hand side of the cutting unit has left hand threads. The splined insert, on the right hand side of the cutting unit, has right hand threads.

13. Install the new (longer) splined insert to the reel shaft (Figure 7). Apply blue Loctite to the threads of the insert prior to installation. Torque to 85-95 ft-lb (115–129 N-m).

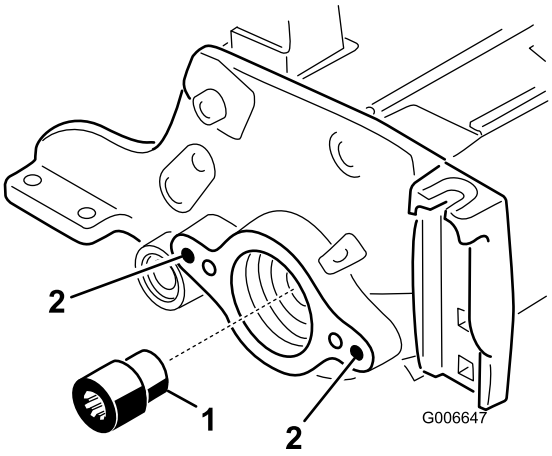

Figure 7

1. Splined insert
2. Clean out these holes

14. On the **non-drive** side of the groomer assembly, slide the groomer plate with quick-up lever off the groomer shaft assembly (Figure 9).

15. Using a 3/8-16 tap, remove the paint in the outer mounting holes in both the left and right side plates (Figure 7).

16. On the drive side of the cutting unit, mount the pivot hub, the drive side groomer plate with quick-up lever and the shim to the cutting unit side plate with (2) 3/8 x 1 inch socket head screws (Figure 9). Apply blue Loctite to the screw threads prior to installation.

Important: Make sure the O-ring is properly positioned on the pivot hub (Figure 8).

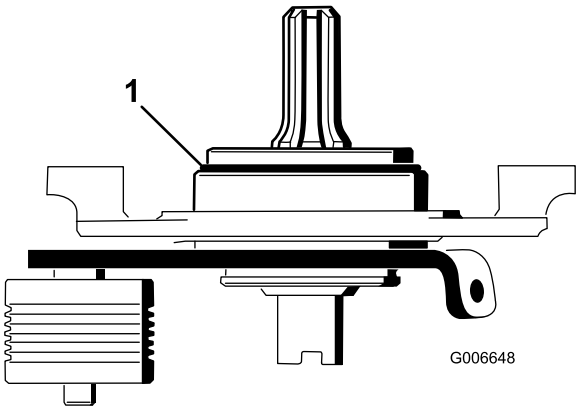

Figure 8

1. O-ring

Important: Make sure the splined end of pivot hub shaft fits into the splined insert.

Important: Make sure the pivot hub mounting surface is flush with the side plate on the cutting unit. The shim must not be pinched between the pivot hub and the side plate.

17. Install the non-drive groomer plate onto the groomer shaft (Figure 9). Be careful not to knock the seal spring off.

18. Secure the non-drive pivot hub to the cutting unit side plate with (2) 3/8 x 1 inch socket head screws (Figure 9). Apply blue Loctite to the screw threads prior to installation.

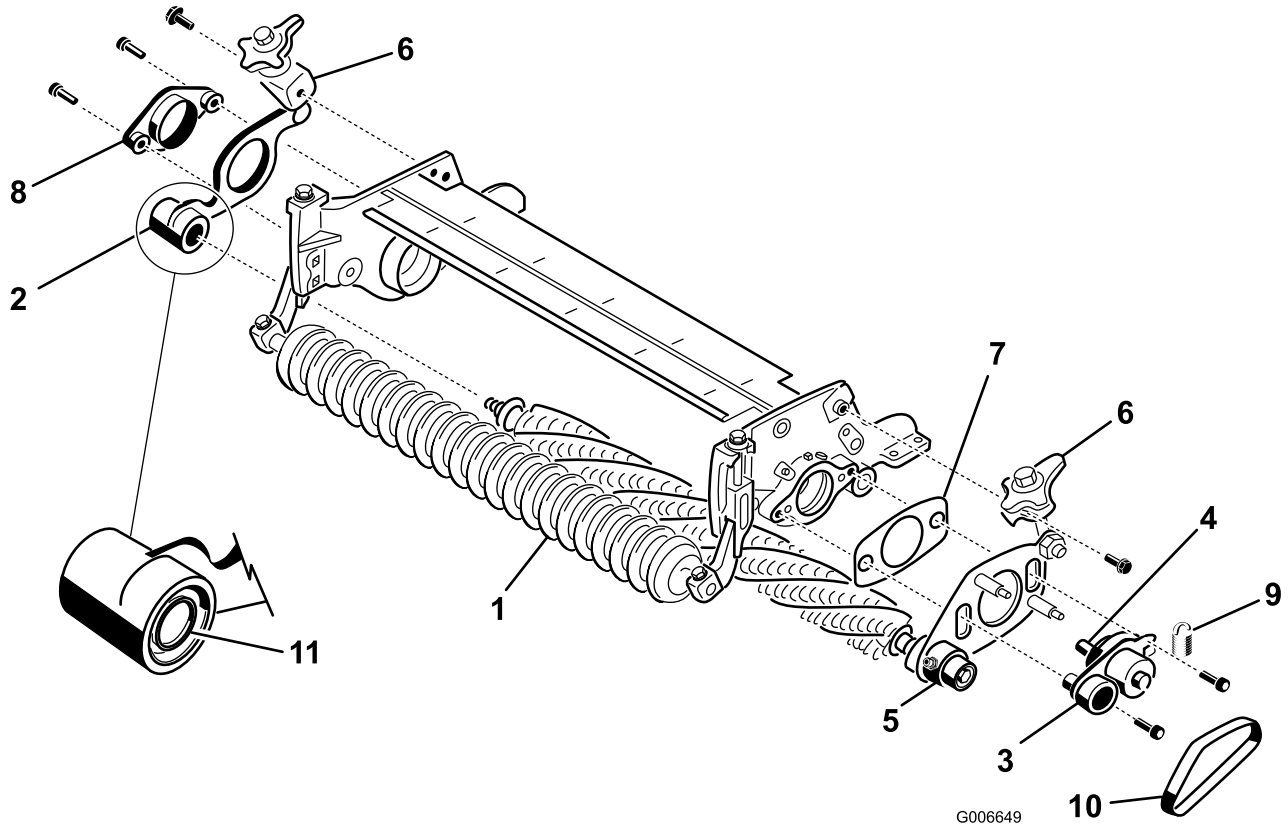

Figure 9

1. Groomer shaft assembly
2. Groomer plate w/quick-up lever (non-drive end)
3. Pivot hub (drive end)
4. Splined shaft
5. Groomer plate w/quick-up lever (drive end)
6. Quick -up lever
7. Shim (must remain loose after installation)
8. Pivot hub (non-drive end)
9. Idler spring
10. Belt
11. Seal spring

19. Make sure the seal lip on each excluder seal, is in light contact with each bearing housing (Figure 10).

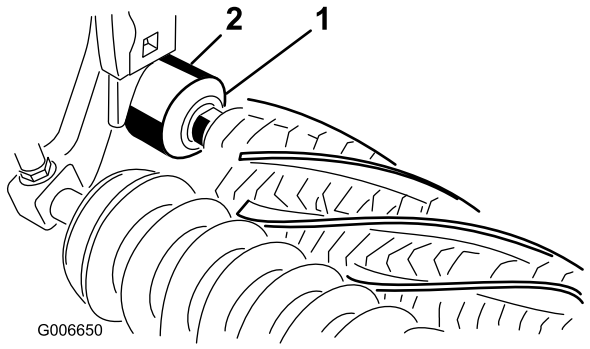

Figure 10

1. Excluder seal
2. Bearing housing

20. Mount the quick-up lever assemblies to the side plates with 3/8 x 3/4 inch flange head bolts (Figure 9).

21. Install the groomer belt onto the pulleys (Figure 9). Make sure the ribs on the belt are properly seated in the grooves on each pulley.

22. Hook the idler spring in the hole in the idler plate tab and around the groove on the groomer plate lower stud (Figure 11). The open end of the spring hook is to be positioned toward the drive pulley.

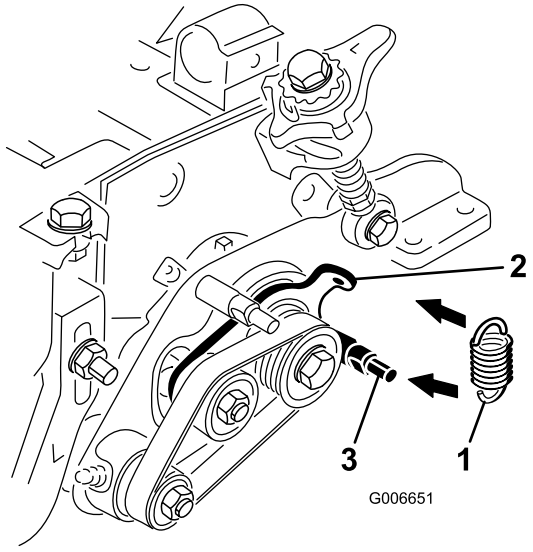

Figure 11

1. Idler spring
2. Idler plate tab
3. Lower stud

23. Check the alignment of the belt/pulleys as follows:

    - Lay a straight edge along the outer face of the **drive** pulley (Figure 12).

      Important: *Do Not* use the idler pulley to check alignment.

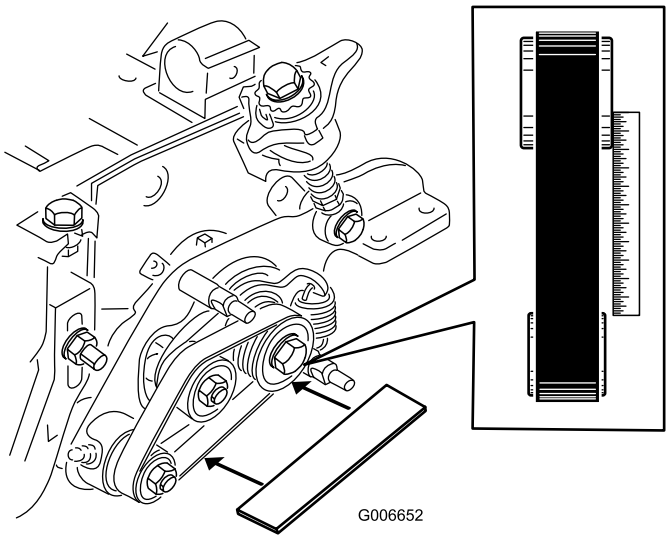

Figure 12

    - The outer faces of the drive and driven pulleys should be in line within .030 inch (.76 mm).
    - If the pulleys are not aligned, refer to the section on Pulley Alignment.
    - If the pulleys are aligned, continue with the installation.

      Important: The belt may fail prematurely if the pulleys are not properly aligned.

24. Install the groomer cover and secure with (2) 5/16 inch flange nuts (Figure 13).

    Important: Do not over tighten the nuts as damage to the cover may occur.

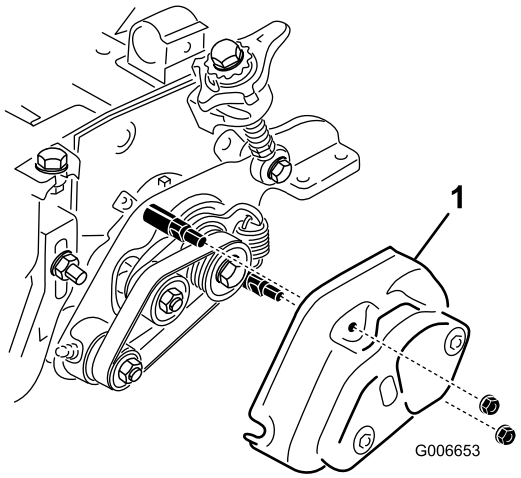

Figure 13

1. Cover

25. Fill each reel bearing housing with grease (Figure 14). Excess grease will purge between the inboard seals and the seal guards.

26. Grease each of the groomer bearings (2 or 3 pumps maximum) (Figure 14). Do not over-grease as excess grease may cause seal failure. Wipe off any excess grease.

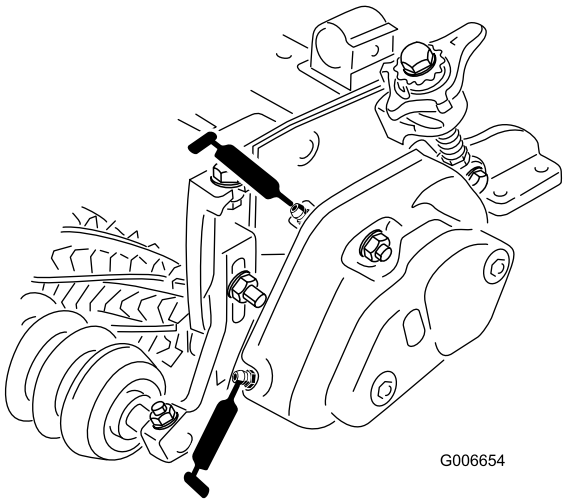

Figure 14

Note: After greasing groomer bearings, operate groomer for 30 seconds, stop machine and wipe excess grease from groomer shaft and seals.

27. Adjust the height of the groomer. Refer to Adjusting Groomer Height.

For Cutting Units Equipped with Rear Roller Brushes

1. Park the traction unit on a level surface and engage the parking brake.
2. Ensure that the cutting units are disengaged. Lower the cutting units to the ground. Turn the engine off and remove the key. Remove all cutting units from traction unit.
3. Remove the (2) roller brush cover mounting nuts and remove the cover (Figure 15).

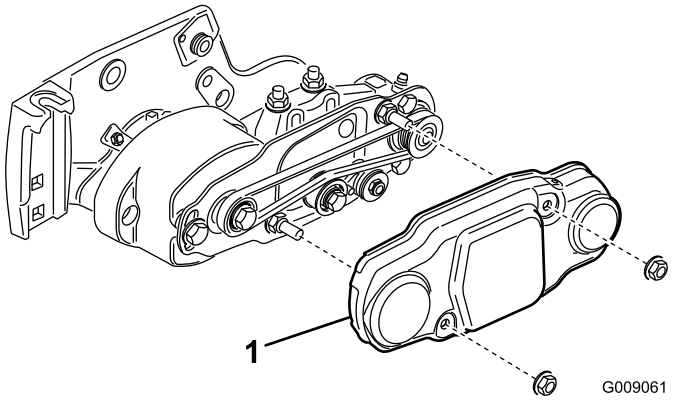

Figure 15

1. Belt cover

4. While rotating the reel, which will rotate the drive pulley, pry the belt off the drive pulley (Figure 16).

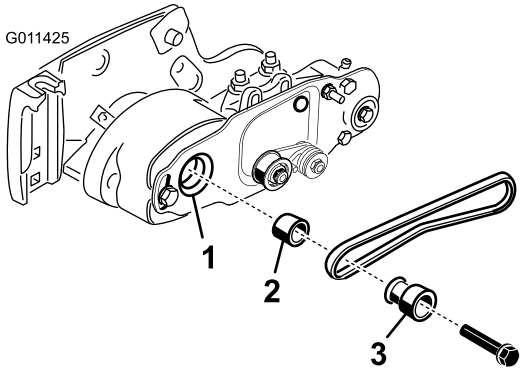

Figure 16

1. Bearing housing shaft
2. Spacer
3. Driver pulley

Note: Wear a padded glove or use a heavy rag to rotate the reel.

Note: If the idler pulley is fixed, release the belt tension by loosening the nut securing the roller brush idler pulley to the roller brush pivot plate. Do not remove the nut.

5. Remove the bolt securing the roller brush drive pulley to the bearing housing shaft (Figure 16).
6. Remove the roller brush drive pulley and the spacer from the shaft (Figure 16).
7. Remove the (2) capscrews securing the roller brush pivot plate to the bearing housing (Figure 17).

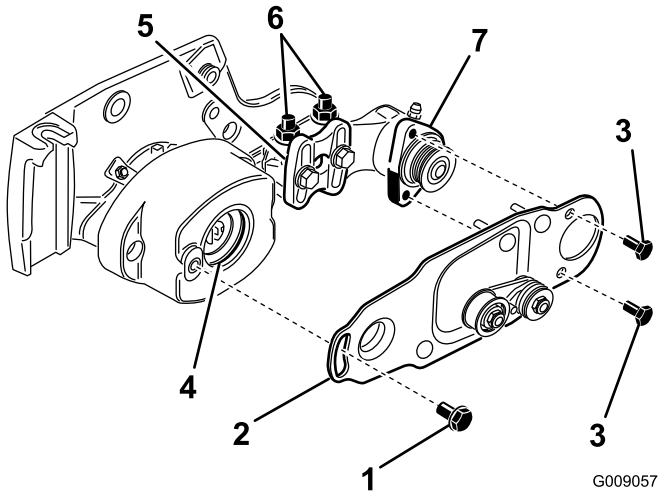

Figure 17

1. Shoulder bolt
2. Brush plate
3. Capscrew
4. Grommet in bearing housing
5. Roller brush mounting bracket
6. Flange lock nuts
7. Roller brush bearing housing

8. Remove the shoulder bolt securing the roller brush pivot plate to the bearing housing (Figure 17).
9. Remove the pivot plate with idler pulley assembly still attached (Figure 17).
10. Remove the (2) screws securing the bearing housing to the cutting unit side plate (Figure 18).
11. Remove the bearing housing from the side plate (Figure 18).

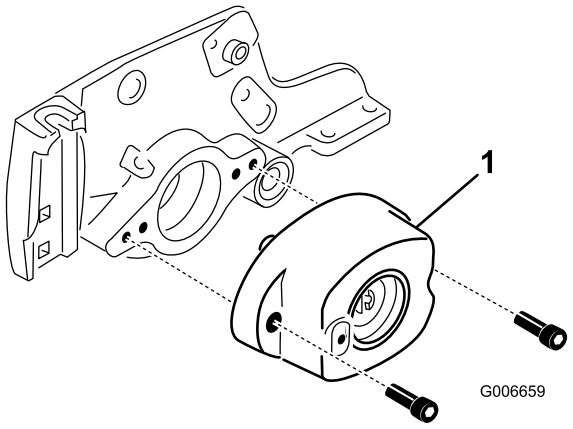

Figure 18

1. Bearing housing

12. Remove the carriage bolts and nuts securing the height of cut brackets to the cutting unit side plates (Figure 19).
13. Loosen the capscrews and locknuts securing the height of cut brackets to the front roller shaft (Figure 19).
14. Remove the height of cut brackets and the front roller from the cutting unit side plates (Figure 19).

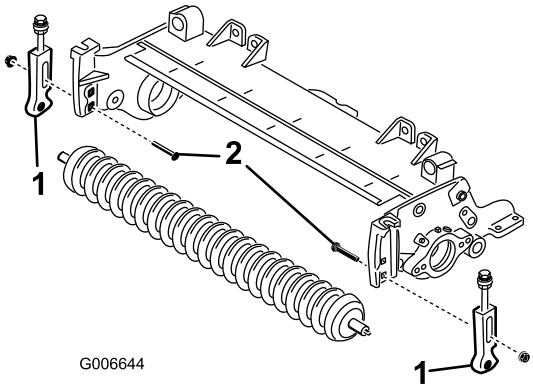

Figure 19

1. Height of cut bracket
2. Carriage bolt

15. Loosely install the new right and left height of cut brackets to the existing front roller with new 5/16 x 1-1/8 inch capscrews and 5/16 inch flange head locknuts. Position the height of cut brackets as shown in figure Figure 20.

   Note: The left height of cut bracket is marked with an "L" and the right height of cut bracket is marked with a "R".

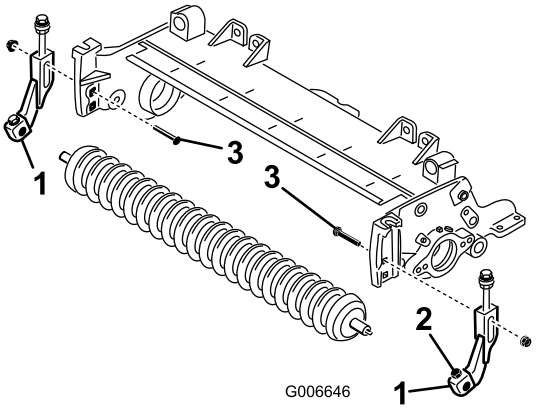

Figure 20

1. Height of cut bracket
2. Capscrew & locknut
3. Carriage bolt

16. Using the upper square hole in each side plate, loosely mount the height of cut brackets to the cutting unit side plates with the carriage bolts previously removed and new 3/8 inch flange nuts, positioning as shown in figure Figure 20.

   Note: The washers on the height of cut adjusting bolts must be located on each side of the flange on the side plate (Figure 21).

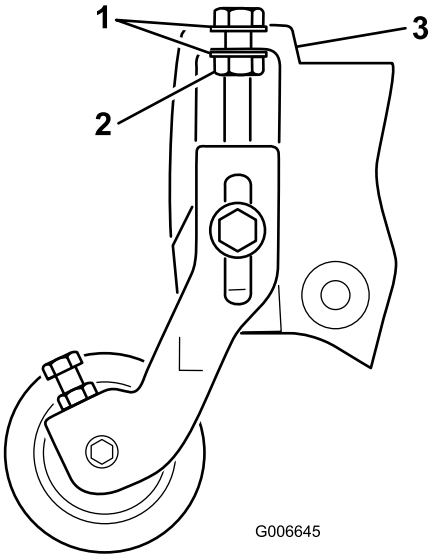

Figure 21

1. Washer
2. Locknut
3. Side plate flange

17. Tighten the locknut on the height of cut adjuster bolt until the washers contact the side plate flange, then back-off the nut 1/2 turn (Figure 21).
18. Center the roller between the brackets and lock in place with the capscrews and locknuts on the brackets (Figure 20).
19. Using the Reel Drive Shaft Tool, remove the splined insert from the reel motor end of the reel shaft (Figure 22). Use Reel drive shaft tool, Part No. TOR4074.

Clean all the grease out of the threaded hole where the splined insert was.

Important: The splined insert on the left hand side of the cutting unit has left hand threads. The splined insert, on the right hand side of the cutting unit, has right hand threads.

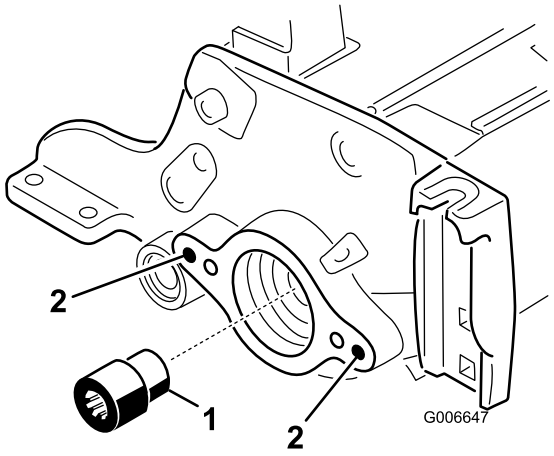

Figure 22

1. Splined insert
2. Clean out these holes

20. Install the new (longer) splined insert to the reel shaft (Figure 22). Apply blue Loctite to the threads of the insert prior to installation. Torque to 85-95 ft-lb (115-129 N-m).
21. On the **non-drive** side of the groomer assembly, slide the groomer plate off the groomer shaft assembly (Figure 24).
22. Using a 3/8-16 tap, remove the paint in the outer mounting holes in both the left and right side plates (Figure 23).
23. On the drive side of the cutting unit, mount the pivot hub, the drive side groomer plate and the shim to the cutting unit side plate with (2) 3/8 x 1 inch socket head screws (Figure 24). Apply blue Loctite to the screw threads prior to installation.

Important: Make sure the O-ring is properly positioned on the pivot hub (Figure 23).

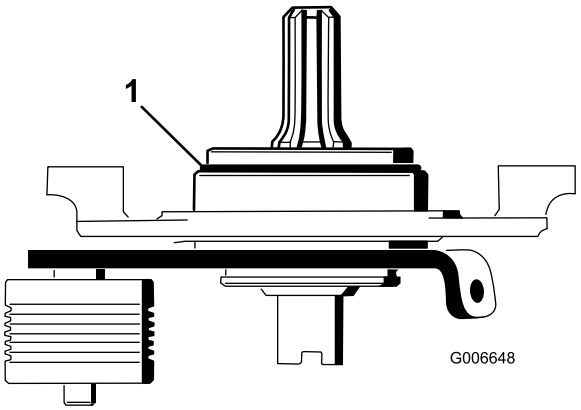

Figure 23

1. O-ring

Important: Make sure the splined end of pivot hub shaft fits into the splined insert.

Important: Make sure the pivot hub mounting surface is flush with the side plate on the cutting unit. The shim must not be pinched between the pivot hub and the side plate. The shim must be able to pivot freely.

24. Install the non-drive groomer plate onto the groomer shaft (Figure 24). Be careful not to knock the seal spring off.

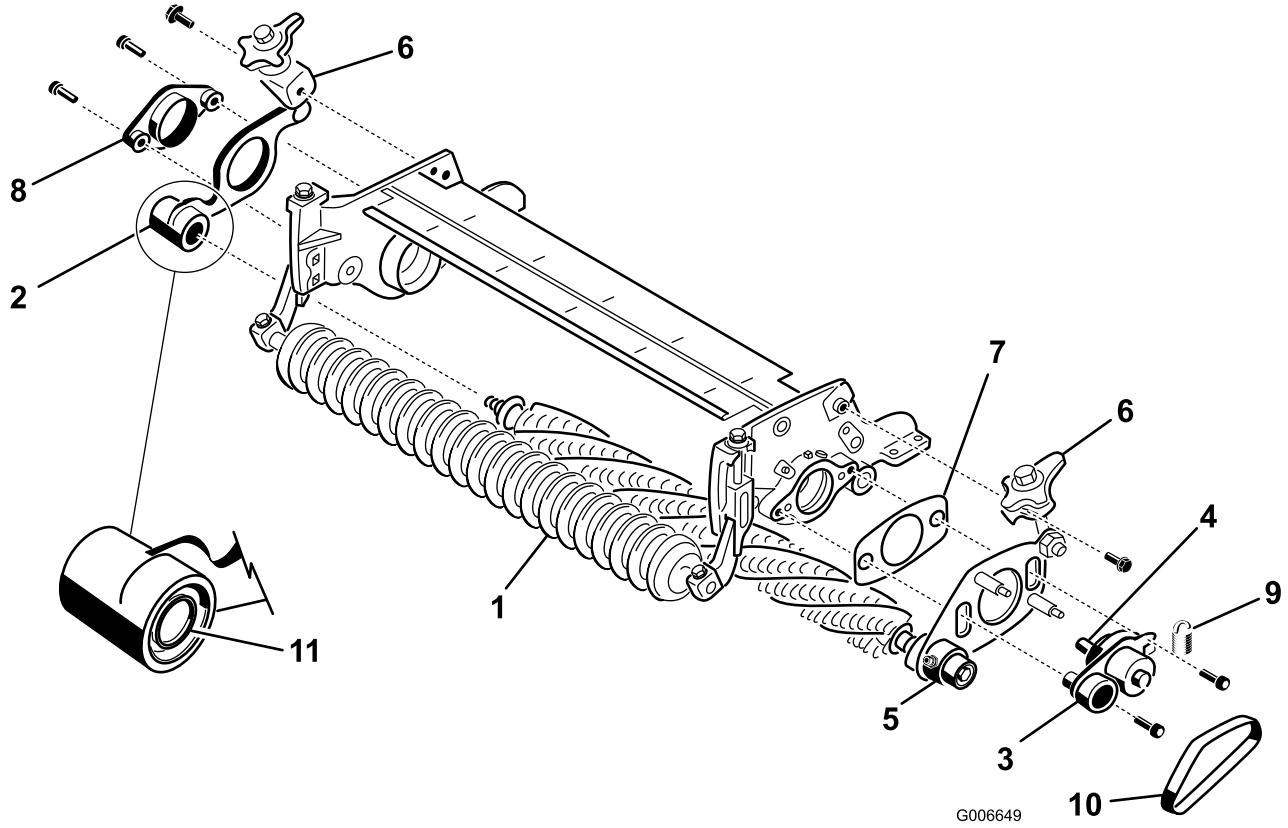

Figure 24

1. Groomer shaft assembly
2. Groomer plate w/quick-up lever (non-drive end)
3. Pivot hub (drive end)
4. Splined shaft
5. Groomer plate w/quick-up lever (drive end)
6. Quick-up lever
7. Shim (must remain loose after installation)
8. Pivot hub (non-drive end)
9. Idler spring
10. Belt
11. Seal spring

25. Secure the non-drive pivot hub to the cutting unit side plate with (2) 3/8 x 1 inch screws (Figure 24). Apply blue Loctite to the screw threads prior to installation.

26. Make sure the seal lip on each excluder seal, is in light contact with each bearing housing (Figure 25).

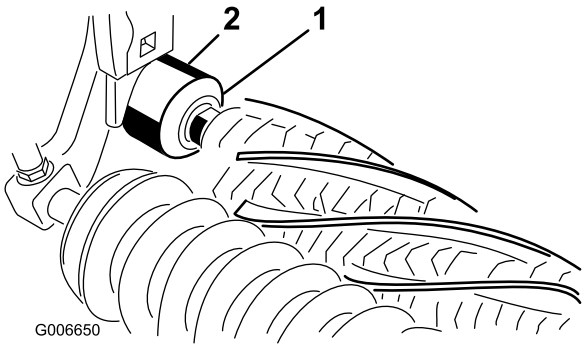

Figure 25

1. Excluder seal
2. Bearing housing

27. Mount the quick-up lever assemblies to the side plates with 3/8 x 3/4 inch flange head bolts (Figure 24).

28. Install the groomer belt onto the pulleys (Figure 24). Make sure the ribs on the belt are properly seated in the grooves on each pulley.

29. Hook the idler spring in the hole in the idler plate tab and around the groove on the groomer plate lower stud (Figure 26). The open end of the spring hook is to be positioned toward the drive pulley.

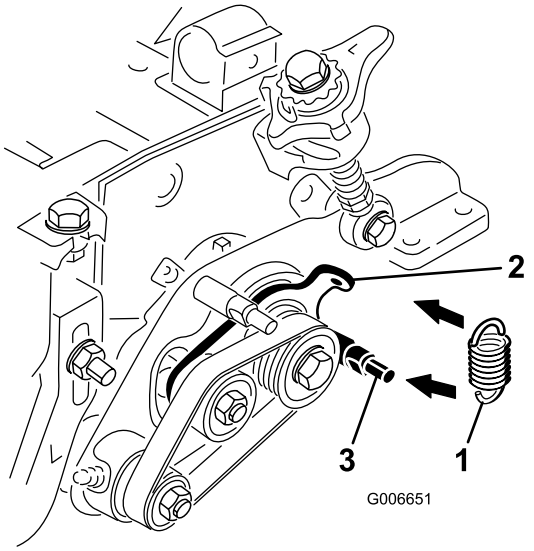

Figure 26

1. Idler spring
2. Idler plate tab
3. Lower stud

30. Check the alignment of the belt/pulleys as follows:

    - Lay a straight edge along the outer face of the **drive** pulley (Figure 27).

    Important: ***Do Not*** **use the idler pulley to check alignment.**

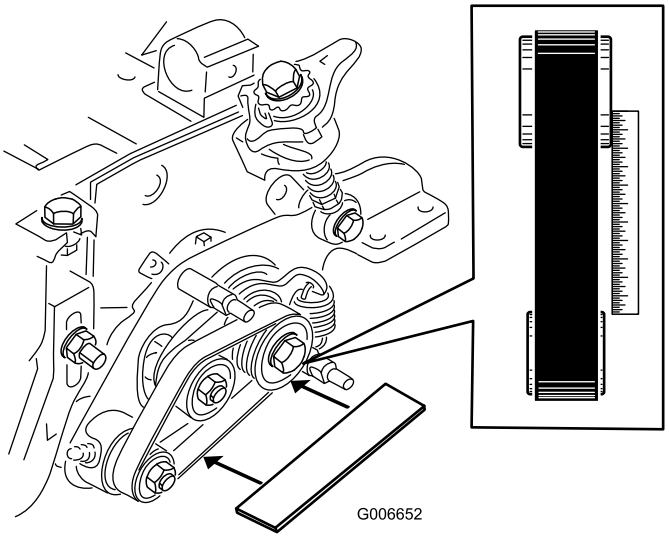

Figure 27

    - The outer faces of the drive and driven pulleys should be in line within .030 inch (.76 mm).
    - If the pulleys are not aligned, refer to the section on Pulley Alignment.
    - If the pulleys are aligned, continue with the installation.

Important: The belt may fail prematurely if the pulleys are not properly aligned.

31. Remove the (2) 5/16 inch flange nuts securing the groomer weight to the groomer cover and remove the weight (Figure 28).

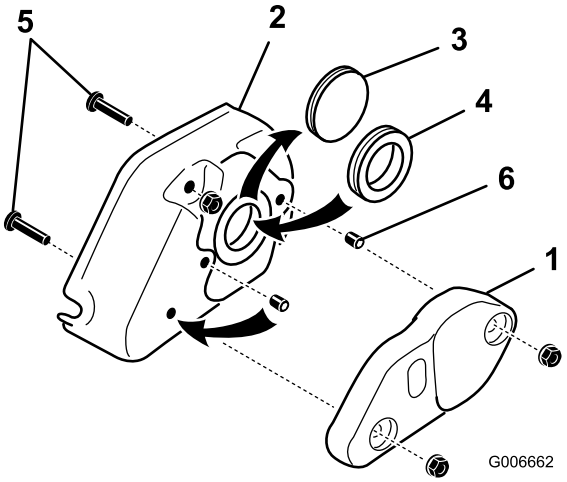

Figure 28

1. Groomer weight
2. Groomer cover
3. Solid grommet
4. Rubber grommet ring
5. Cover screws (remove)
6. Set screw (2)

32. Remove the solid grommet from the cover and replace it with the rubber grommet ring (Figure 28).
33. Remove the (2) 5/16 x 1-1/4 screws threaded into the cover (Figure 28).
34. Remove the set screw from the center hole in the groomer cover (Figure 28). Install this set screw and the set screw, included with the kit, into the holes previously used for the cover mounting screws. Apply Loctite to the setscrews prior to installation. Make sure the set screws are flush with the cover.
35. Install the groomer cover and secure with (2) 5/16 inch flange nuts (Figure 29).

Important: Do not over tighten the nuts.

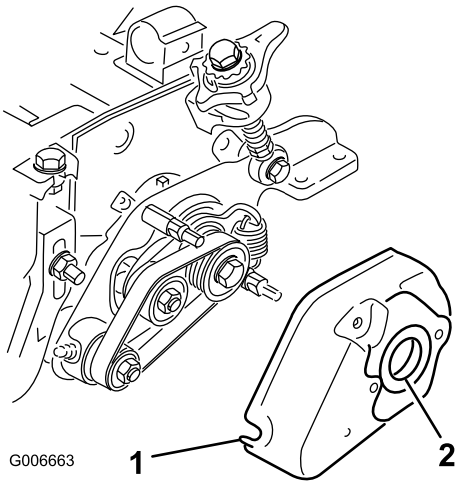

Figure 29

1. Groomer cover
2. Grommet

36. Apply a film of grease to the inside diameter of the grommet in the groomer cover (Figure 29).

37. Loosen the bolts securing the roller brush bearing housing to the roller brush mounting bracket (Figure 30).

38. Install the roller brush pivot plate (Figure 30). When the protrusion on the pivot plate is inserted into the grommet on the groomer cover, make sure that the grommet stays properly seated on the cover.

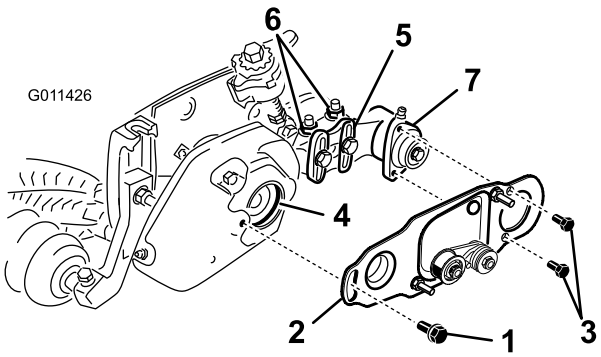

Figure 30

1. Shoulder bolt
2. Brush plate
3. Capscrew
4. Grommet in bearing housing
5. Roller brush mounting bracket
6. Flange lock nuts
7. Roller brush bearing housing

39. Apply 242 Loctite (blue) to the (2) 5/16 x 5/8 inch capscrews and use them to mount the brush plate to the roller brush bearing housing (Figure 30). Torque the capscrews to 15-19 ft-lb (20–26 N-m).

40. Check to make sure the roller brush plate is parallel to the cutting unit side plate. If it is not parallel, proceed as follows:

    - Loosen the (2) flange locknuts securing the roller brush mounting bracket to the cutting unit side plate (Figure 30).
    - Rotate the roller brush bearing housing until the brush plate is parallel to the cutting unit side plate (Figure 30).
    - Tighten the (2) flange locknuts securing the roller brush mounting bracket to the cutting unit side plate (Figure 30).

41. Apply 242 Loctite (blue) to the shoulder bolt (Figure 30). Mount the brush plate to the groomer cover with the shoulder bolt. (Fig. 29). Torque the bolt to 15-19 ft-lb (20–26 N-m).

42. Remove the bolt securing the groomer pulley to the drive shaft (Figure 31).

43. Insert the brush drive pulley into the groomer drive pulley and onto the drive shaft (Figure 31). Make sure the pulley tabs are positioned in the slot in the drive shaft.

44. Apply Loctite to the threads of the 3/8 x 2 inch flange head bolt. Secure the drive pulley to the shaft with the flange head bolt (Figure 31). Torque the bolt to 34-40 ft-lb (46–54 N-m).

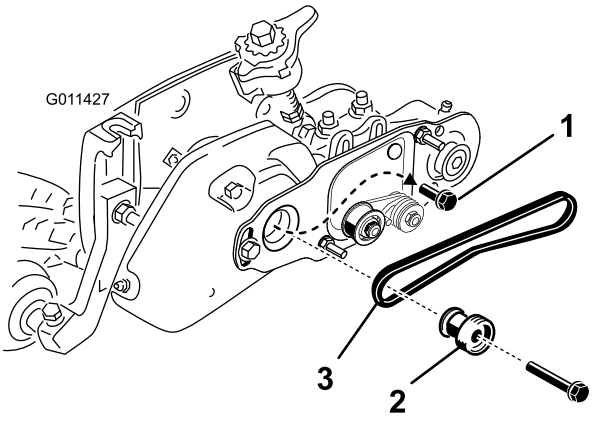

Figure 31

1. Groomer pulley mounting bolt (remove)
2. Drive pulley
3. Belt

45. Install the belt onto the pulleys and spring loaded idler as follows:

    - Loop the belt around the **driven** pulley and then over the top of the idler pulley (Figure 32).

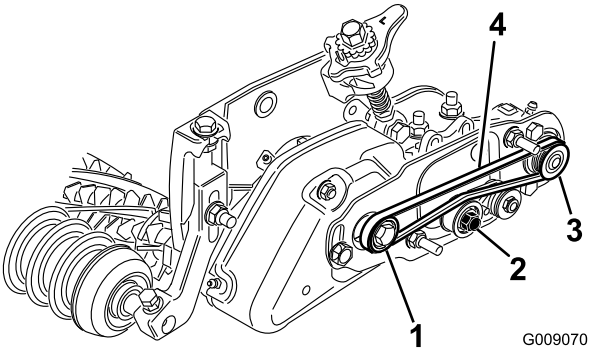

Figure 32

1. Drive pulley
2. Idler pulley assembly
3. Driven pulley
4. Belt

    - Start the belt on the **drive** pulley (Figure 32).
    - While guiding the belt onto the **drive** pulley, rotate the reel forward to draw the belt onto the drive pulley.

      Note: Wear a padded glove or use a heavy rag to rotate the reel.

Important: Make sure the ribs on the belt are properly seated in the grooves in each pulley. Also, make sure the belt is in the center of the idler pulley.

46. Push down on the idler pulley to ensure that the idler pulley assembly pivots freely.

47. Check the alignment of the belt/pulleys as follows:

    - Lay a straight edge along the outer face of the **drive** pulley (Figure 33).

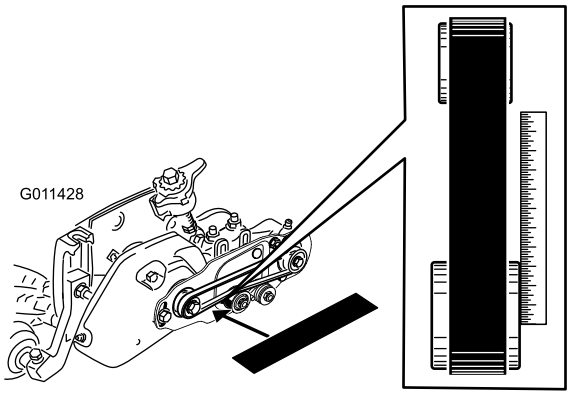

Figure 33

    - The outer faces of the drive and driven pulleys should be in line within .030 inch (.76 mm).
    - If the pulleys are not aligned, Refer to the section on Pulley Alignment.
    - If the pulleys are aligned, continue with the installation.
    - **Do Not** use the idler pulley to check alignment.

Important: The belt may fail prematurely if the pulleys are not properly aligned.

48. Slide the belt cover onto the mounting bolts and secure with (2) flange nuts (Figure 34).

Important: Do not overtighten nuts as damage to cover may occur.

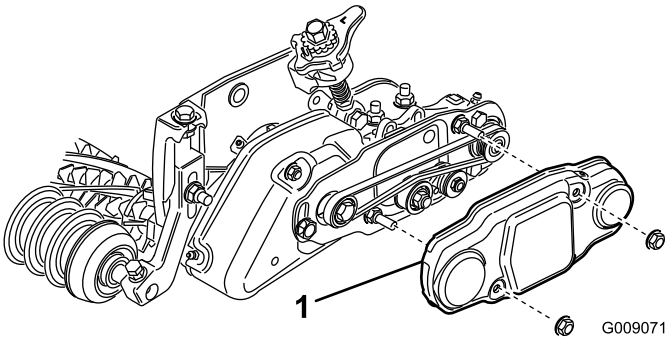

Figure 34

1. Belt cover

49. Fill each reel bearing housing with grease (Figure 35). Excess grease will purge between the inboard seals and the seal guards.

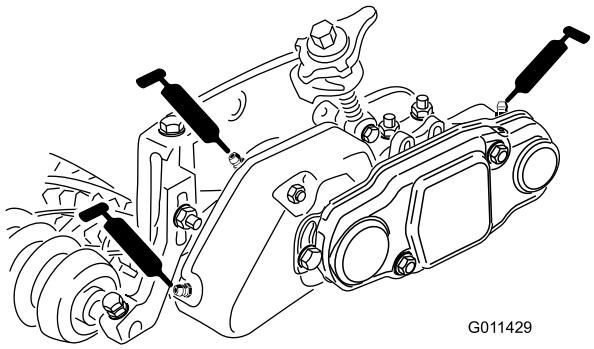

Figure 35

50. Grease each of the groomer bearings (2 or 3 pumps maximum) (Figure 35). Do not over-grease as excess grease may cause seal failure. Wipe off any excess grease.

    Note: After greasing groomer bearings, operate groomer for 30 seconds, stop machine and wipe excess grease from groomer shaft and seals.

51. Adjust the height of the groomer. Refer to Adjusting Groomer Height.

Installing the Broomer Kit (optional)

1. From one side of the groomer reel, slide a brush into each groove around the full length of the groomer reel (Figure 36).

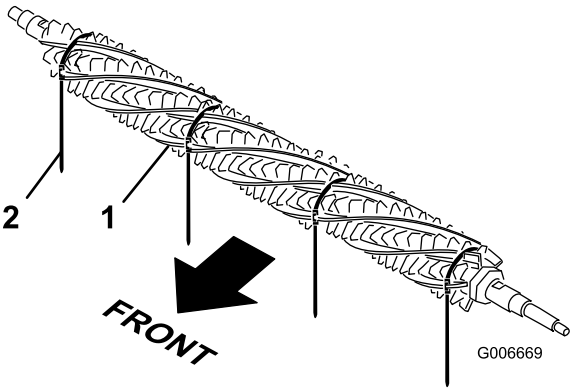

Figure 36

1. Brush
2. Strap

2. Verify that the brushes are seated in the groomer blade slots (Figure 37 & Figure 38).
3. Loosely wrap the straps, as shown in Figure 38, around the groomer reel shaft and brushes inserting the straps in the grooves in the brushes Figure 37 Position the brushes so the straps are between the following blades 1-2, 14-15, 28-29 and 41-42.

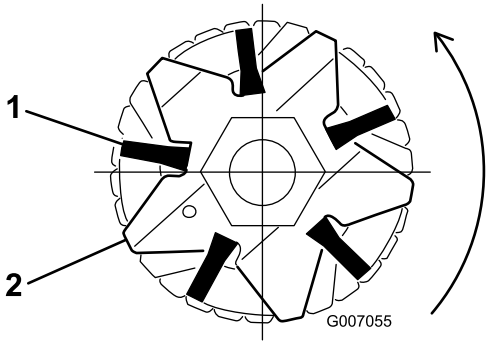

Figure 37

1. Brush
2. Blade

Important: The straps must be wrapped around the groomer blade and brush assembly in the correct direction.

Note: If the broomer brushes are not seated properly in the blade slots, loosen the groomer blade retaining nuts on each end of the groomer shaft, position the broomer brushes properly in the blade slots and tighten the groomer blade retaining nuts (Figure 38).

4. While pushing a screw driver against the strap buckle, grasp the strap with a vice grip pliers and pull the straps tight until they lock in the brush grooves (Figure 38).

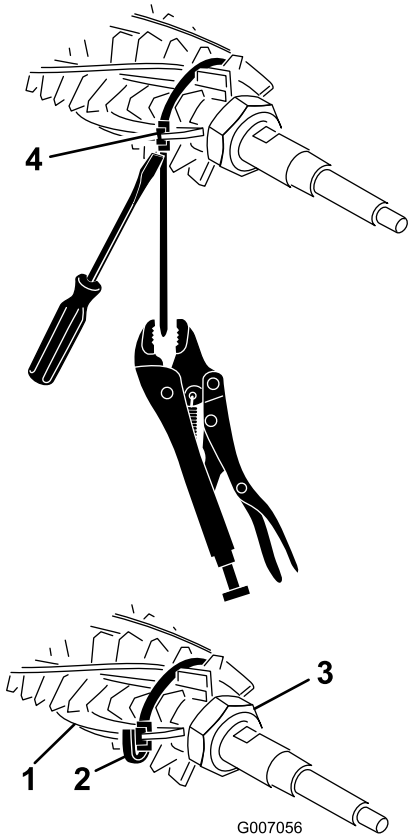

Figure 38

1. Brush
2. Strap
3. Retaining nut (2)
4. Strap buckle

5. Trim off the strap to approximately 1/4 inch from the buckle and fold the excess strap over the buckle (Figure 38)

Operation

Grooming is performed in the turf canopy above the soil level. Grooming promotes vertical growth of grass plants, reduces grain and severs stolons producing a denser turf. Grooming produces a more uniform and tighter playing surface for faster and truer action of the golf ball.

Verticutting is a more aggressive cultivation technique designed to remove thatch by cutting through the turf canopy and into the thatch/mat layer. Grooming should not be considered a replacement for verticutting. Verticutting is generally a more rigorous and periodic treatment that can temporarily damage the playing surface, while grooming is a routine and gentler treatment designed to manicure the turf.

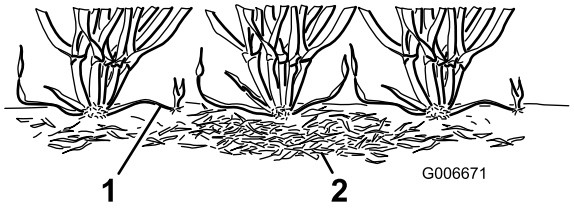

Figure 39

1. Grass runners (stolons) 2. Thatch

Grooming brushes are a more recent development which are designed to be less intrusive than conventional grooming blades when adjusted to lightly contact the turf canopy. Brushing may be more beneficial for the ultra-dwarf cultivars, since these grass types have more of a upright growth pattern and do not fill in that well through horizontal growth. Brushes, however, can injure leaf tissue if they are set to penetrate too deeply into the canopy.

Grooming is similar to verticutting in its runner cutting action. Grooming blades however, should never penetrate the soil like verticutting or dethatching. Groomer blades are spaced closer together and are used more often than verticutters so that they are more effective in cutting runners and removing thatch.

Because grooming injures leaf tissue to some degree it should be avoided during periods of high stress. Cool season species such as creeping bent grass and annual blue grass should not be groomed during high temperature (and high humidity) periods in midsummer.

It is difficult to make specific recommendations on the use of grooming reels because so many variables affect the performance of grooming, including:

- The time of the year (i.e., the growing season) and weather pattern
- The general condition of each fairway
- The frequency of grooming/cutting—both how many cuttings per week and how many passes per cutting
- The height of cut setting on the main reel
- The height/depth setting on the grooming reel
- How long the grooming reel has been in use
- The type of grass
- The overall management program (i.e. irrigation, fertilizing, spraying, coring, over seeding, etc.)
- The traffic on the fairway
- Stress periods (i.e., high temperatures, high humidity, unusually high traffic)

  These factors can vary from golf course to golf course. It is important, therefore, to inspect the fairways frequently and vary the grooming practice in accordance with the need.

Note: The practice of changing the direction of cut each time the fairway is cut should be continued when a groomer is used. This rotation will enhance the effects of the grooming.

Note: Improper or over aggressive use of the groomer reel (i.e. too deep or too frequent grooming) may cause unnecessary stress of the turf leading to severe turf damage. Use the groomer cautiously.

Note: Operate the groomer in a straight line as much as possible. Use caution when turning while operating groomer.

Adjusting the Groomer Height

1. Park the machine on a clean and level surface, lower the cutting units completely to the ground, stop the engine, engage the parking brake and remove the key from the ignition switch.
2. Make sure the rollers are clean and cutting unit is set to the desired height-of-cut (see Cutting Unit Operator's Manual).
3. Rotate the quick-up levers (Figure 40) to the Engaged Position (handle points toward the front of the cutting unit. **Use Height of Cut (HOC) and Height of Groom (HOG) recommended range chart for setting the gauge bar.**
4. On one end of the groomer reel, measure the distance from the lowest tip of the groomer blade to the working surface (Figure 40). Turn height adjuster knob (Figure 40) to raise or lower the groomer blade tip to the desired height.

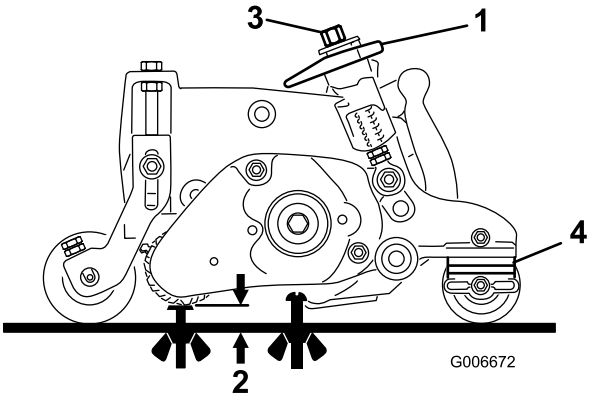

Figure 40

1. Quick-up lever (engaged position)
2. Groomer height (HOG)
3. Height adjuster knob
4. Number of rear roller spacers (below side plate pad)

5. Repeat step 4 on the opposite end of the groomer. Then, recheck the setting on the first side of groomer. Height setting on both ends of the groomer should be identical. Readjust as required.

   Important: After adjusting the height of the groomer, adjust the jam nuts on threaded rod, so the springs are 1-3/8 inch (3.5 cm) long when the groomer levers are in the disengaged position (handle pointed towards rear of cutting unit) (Figure 41).

   Note: 1-3/8 inches (3.5 cm) is the distance from the top of the jam nut to the bottom of the groomer mounting bracket.

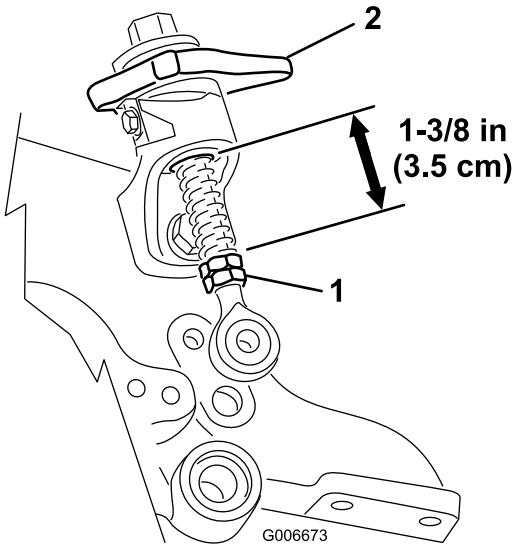

Figure 41

Height of Cut (HOC) and Height of Groom (HOG) Recommended Range

Height of Cut	Number of Rear Roller Spacers	Recommended HOG = HOC- Groomer Engagement
.250 inch (6.4 mm)	0	.125-.250 (3.1–6.4 mm)
.375 inch (9.5 mm) **.375 inch (9.5 mm)**	0 1	.187-.375 (4.7–9.5 mm) .187-.375 (4.7–9.5 mm)
.500 inch (12.7 mm) **.500 inch (12.7 mm)** **.500 inch (12.7 mm)**	0 1 2	.250-.500 (6.4–12.7 mm) .250-.500 (6.4–12.7 mm) .250-.375 (6.4–9.5 mm)
.625 inch (15.8 mm) **.625 inch (15.8 mm)** **.625 inch (15.8 mm)**	0 1 2	.375-.625 (9.5–15.8 mm) .375-.625 (9.5–15.8 mm) .375-.500 (9.5–12.7 mm)
.75 inch (19 mm) **.750 inch (19 mm)** **.750 inch (19 mm)**	1 2 3	.500-.750 (9.5–15.8 mm) .500-.750 (9.5–15.8 mm) .500-.625 (9.5–12.7 mm)
.875 inch (22.2 mm) **.875 inch (22.2 mm)** **.875 inch (22.2 mm)**	1 2 3	.625-.875 (15.8–22.2 mm) .625-.875 (15.8–22.2 mm) .625-.750 (15.8–19 mm)
1.00 inch (25.4 mm) **1.00 inch (25.4 mm)** **1.00 inch (25.4 mm)**	2* 3 4	.750-1.00 (19–25.4 mm) .750-1.00 (19–25.4 mm) .750-.875 (19–22.2 mm)

Note: Maximum HOG recommended is half the HOC to 0.25 inch (6.4 mm) Maximum engagement

***** Move groomer front height of cut (HOC) bracket to the bottom (cutting unit location) side plate hole

Testing the Groomer Performance

Important: Improper or over aggressive use of the grooming reel (i.e., too deep or too frequent grooming) may cause unnecessary stress on the turf leading to severe damage. Use the groomer cautiously.

⚠ DANGER

Contact with the reels or other moving parts can result in personal injury.

- **Before making any adjustments to the cutting units, disengage the reels, set the parking brake, stop the engine, and remove the ignition key.**
- **Keep fingers, hands, and clothing away from the reels or other moving parts.**

It is important to determine the performance of the groomer before putting it into regular use.

We suggest that a formal test procedure be used. The following is a practical way of determining the proper height/depth setting:

1. Set the main cutting reels to the height of cut that would normally be used without the grooming reel. Use a Wiehle roller on the front and a full roller on the rear.
2. Set each of the grooming reels to the desired height setting.
3. Examine the test area and determine if the groomed areas gives the desired results. If not, increase or decrease the height of the groomers, and make another test pass. The amount of grass removed is a key indicator in determining the height/depth setting of the grooming reel.

Check the test area 2 or 3 days after the first grooming for general condition/damage. If the groomed areas are turning yellow/brown, and the non-groomed areas are green, then the grooming was too aggressive.

Maintenance

Cleaning

Hose off the grooming reel after using it. Do not direct the water stream directly at the groomer bearing seals. Do not permit the grooming reel to stand in water so that the components rust.

Lubrication

Lubricate the grease fittings every 50 hours. Wipe off any excess grease.

Note: After greasing groomer bearings, operate groomer for 30 seconds, stop machine and wipe excess grease from groomer shaft and seals.

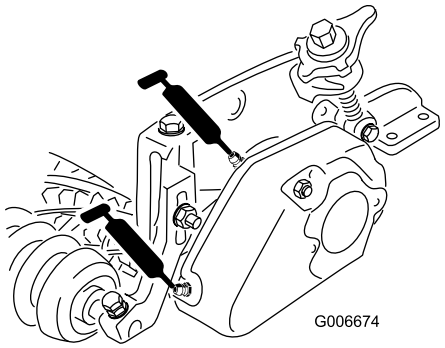

Figure 42

Inspecting the Blades

Inspect the grooming reel blades frequently for damage and wear. Bent blades may be straightened with a pliers. Worn blades may be replaced. When inspecting the blades, check to see that the right and left blade shaft end nuts are tight.

Note: Because the groomer may introduce more debris (i.e., dirt and sand) into the cutting unit than what the reel would normally be exposed to, the bedknife and main reel should be checked for wear more frequently. This is especially important in sandy soil.

Important: Backlapping at the incorrect reel speed may loosen and strip the drive pulley threads. Refer to the Cutting Unit Operator's Manual for backlapping procedure.

Note: Groomer blades, idler bearing, and belt(s) are considered consumable items.

Groomer Pulley/Belt Alignment

1. The driven pulley (at groomer shaft) can move in or out. Make note of which way the pulley needs to move.
2. Remove idler spring, releasing tension from the belt. Remove the belt.
3. Remove the lock nut securing the driven pulley to the end of the groomer shaft. Insert a 5/8 inch wrench on the flats on the groomer shaft to keep the shaft from rotating.
4. Remove the pulley from the shaft.
5. If the pulley needs to move out, add one .032 inch (.81 mm) thick spacer. If the pulley needs to move in, remove the existing .032 inch (.81 mm) thick spacer.
6. Re-install the pulley.

   Note: Make sure the pulley key is installed, if so equipped.
7. Hold the groomer shaft from rotating by putting a 5/8 inch wrench on the flats on the shaft. Secure the pulley on the shaft with the flange nut.
8. Torque the nut to 22-33 ft-lb (30–45 N-m)
9. Re-install the belt and idler spring.
10. Check alignment, the outer faces of the drive and driven pulleys should be in line with in .030 inch (.76 mm). Do Not Use The Idler Pulley To Check Alignment.

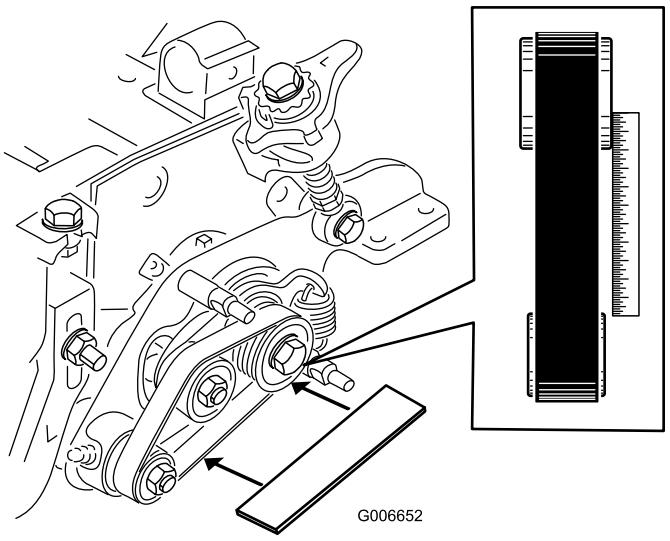

Figure 43

Groomer Binding Troubleshooting

1. Make sure the groomer is set to the desired height of groom (HOG) (Figure 44).

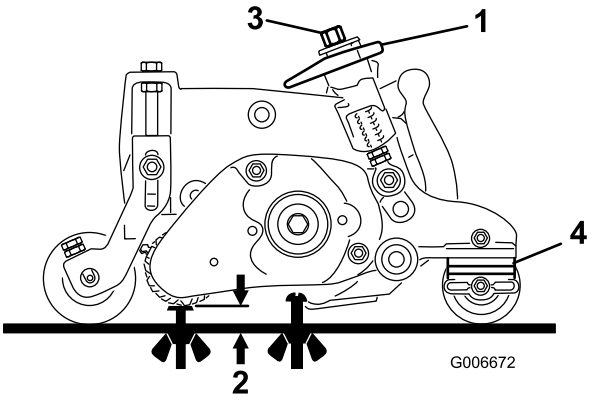

Figure 44

1. Quick-up lever (engaged position)
2. Groomer height (HOG)
3. Height adjuster knob
4. Number of rear roller spacers (below side plate pad)

2. Loosen quick-up mounting bolt and make sure threaded rod is in line and not binding on bottom quick-up ramp (Figure 45). Re-tighten bolts.
3. Check the length of the quick-up springs on the threaded rods, the length should be 1-3/8 inch (3.5 cm) long (Figure 45).

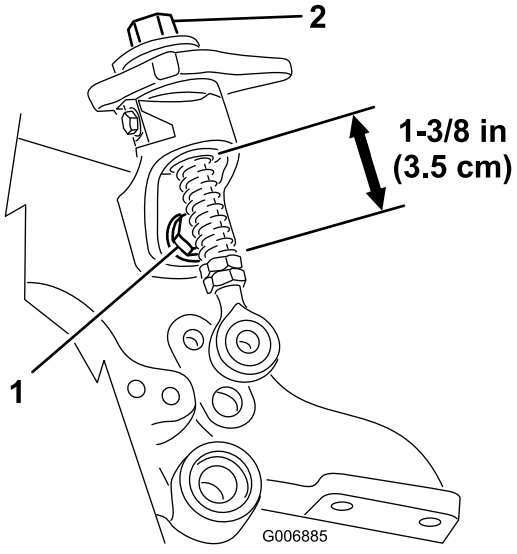

Figure 45

1. Quick-up mounting bolt
2. Height adjuster knob

4. If the height adjuster knob does not rotate freely, the bushing may be dirty (Figure 45). Clean the bushing if necessary.
5. If a roller brush is installed, make sure the brush plate (Figure 46) is parallel to the cutting unit side plate and is fully inserted into the rubber grommets.

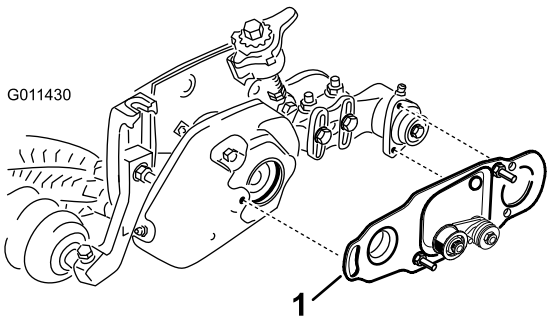

Figure 46

1. Brush plate

6. Make sure the main drive bushing (Figure 47) pivots freely around the drive hub.

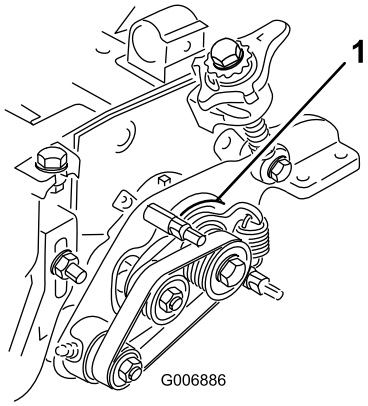

Figure 47

1. Main drive bushing

7. Make sure the shim (Figure 48) between the drive side groomer pivot plate and the cutting unit side plate is not pinched by the pivot hub. Shim must be able to move freely.

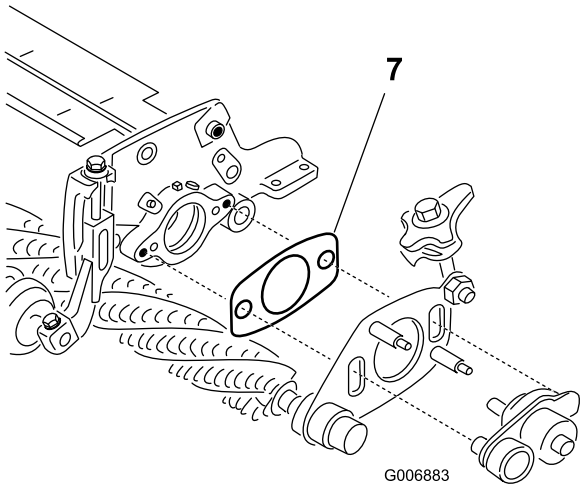

Figure 48

1. Shim

8. Make sure nuts on groomer and roller brush covers (Figure 49) are not over tightened.

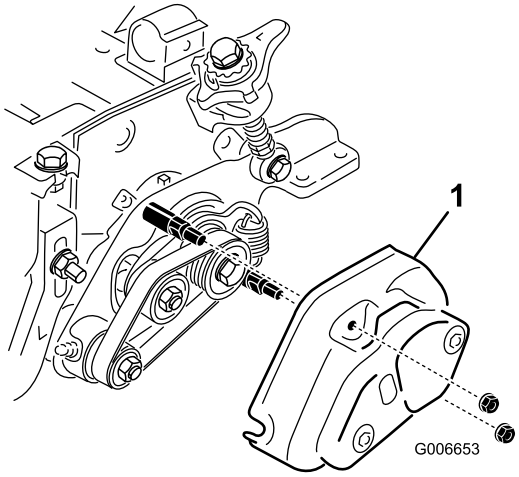

Figure 49

1. Cover

Declaration of Incorporation

Model No.	Serial No.	Product Description	Invoice Description	General Description	Directive
03713	—	Left-Hand Groomer Kit, 27-inch Reelmaster 7000-D DPA Cutting Unit	27" HD LH GROOMER KIT	27in HD LH Groomer Kit	2006/42/EC, 2000/14/EC, 2004/108/EC
03714	—	Right-Hand Groomer Kit, 27-inch Reelmaster 7000-D DPA Cutting Unit	27" HD RH GROOMER KIT	27in HD RH Groomer Kit	2006/42/EC, 2000/14/EC, 2004/108/EC

Relevant technical documentation has been compiled as required per Part B of Annex VII of 2006/42/EC.

We will undertake to transmit, in response to requests by national authorities, relevant information on this partly completed machinery. The method of transmission shall be electronic transmittal.

This machinery shall not be put into service until incorporated into approved Toro models as indicated on the associated Declaration of Conformity and in accordance with all instructions, whereby it can be declared in conformity with all relevant Directives.

Certified:



David Klis
Sr. Engineering Manager
8111 Lyndale Ave. South
Bloomington, MN 55420, USA
September 29, 2014

EU Technical Contact:

Peter Tetteroo
Toro Europe NV
B-2260 Oevel-Westerloo
Belgium

Tel. 0032 14 562960
Fax 0032 14 581911