Form No. 3392-292 Rev A

TORO®

Count on it.

Operator's Manual

Reelmaster® 5010 Series Traction Unit

Model No. 03675—Serial No. 315000001 and Up
Model No. 03675N—Serial No. 315000001 and Up
Model No. 03676—Serial No. 315000001 and Up
Model No. 03676N—Serial No. 315000001 and Up
Model No. 03677—Serial No. 315000001 and Up
Model No. 03677N—Serial No. 315000001 and Up

Register at www.Toro.com.
Original Instructions (EN)

CE

3392-292 A

This product complies with all relevant European directives; for details, please see the separate product specific Declaration of Conformity (DOC) sheet.

⚠ WARNING

CALIFORNIA
Proposition 65 Warning

This product contains a chemical or chemicals known to the State of California to cause cancer, birth defects, or reproductive harm.

Diesel engine exhaust and some of its constituents are known to the State of California to cause cancer, birth defects, and other reproductive harm.

Important: This engine is not equipped with a spark arrester muffler. It is a violation of California Public Resource Code Section 4442 to use or operate the engine on any forest-covered, brush-covered, or grass-covered land. Other states or federal areas may have similar laws.

Introduction

This machine is a ride-on, reel-blade lawn mower intended to be used by professional, hired operators in commercial applications. It is primarily designed for cutting grass on well-maintained lawns in golf courses, parks, sports fields, and on commercial grounds. It is not designed for cutting brush, mowing grass and other growth alongside highways, or for agricultural uses.

Read this information carefully to learn how to operate and maintain your product properly and to avoid injury and product damage. You are responsible for operating the product properly and safely.

You may contact Toro directly at www.Toro.com for product and accessory information, help finding a dealer, or to register your product.

Whenever you need service, genuine Toro parts, or additional information, contact an Authorized Service Dealer or Toro Customer Service and have the model and serial numbers of your product ready. The model and serial numbers are on a plate mounted on the left side of the frame under the foot rest. Write the numbers in the space provided.

Model No. _____

Serial No. _____

This manual identifies potential hazards and has safety messages identified by the safety alert symbol (Figure 1), which signals a hazard that may cause serious injury or death if you do not follow the recommended precautions.



Figure 1

1. Safety alert symbol

This manual uses 2 words to highlight information. **Important** calls attention to special mechanical information and **Note** emphasizes general information worthy of special attention.

© 2014—The Toro® Company
8111 Lyndale Avenue South
Bloomington, MN 55420

Contact us at www.Toro.com.
Printed in the USA
All Rights Reserved

Contents

Safety 4
Safe Operating Practices 4
Toro Riding Mower Safety 6
Sound Power Level 7
Sound Power Level 7
Sound Pressure Level 7
Sound Pressure Level 7
Vibration Level 7
Vibration Level 7
Vibration Level 7
Safety and Instructional Decals 8
Setup 12
1 Adjusting the Tire Pressure 12
2 Adjusting the Step Height 13
3 Adjusting the Control Arm Position 13
4 Installing the Cutting Units 13
5 Adjusting the Turf Compensation Spring 16
6 Installing the CE Hood Latch 18
7 Using the Cutting Unit Kickstand 18
Product Overview 19
Controls 19
Specifications 25
Attachments/Accessories 25
Operation 26
Checking the Engine-Oil Level 26
Checking the Cooling System 27
Adding Fuel 27
Checking the Hydraulic Fluid 28
Checking the Reel to Bedknife Contact 29
Checking the Torque of the Wheel Nuts 29
Breaking-in the Machine 29
Bleeding the Fuel System 29
Starting and Stopping the Engine 30
Setting the Reel Speed 30
Adjusting the Lift Arm Counterbalance 31
Adjusting the Lift Arm Turn Around Position 31
Locating the Jacking Points 31
Transporting the Machine 32
Loading the Machine 32
Pushing or Towing the Machine 33
Understanding the Diagnostic Light 33
Checking the Interlock Switches 34
Hydraulic Valve Solenoid Functions 34
Operating Tips 34
Maintenance 36
Recommended Maintenance Schedule(s) 36
Daily Maintenance Checklist 37
Service Interval Chart 38
Lubrication 38
Greasing the Bearings and Bushings 38
Engine Maintenance 40
Servicing the Air Cleaner 40
Servicing the Engine Oil and Filter 40
Adjusting the Throttle 41
Fuel System Maintenance 42
Draining the Fuel Tank 42
Checking the Fuel Lines and Connections 42
Servicing the Water Separator 42
Cleaning the Fuel Pick-up Tube Screen 42
Bleeding Air from the Fuel Injectors 42
Electrical System Maintenance 43
Servicing the Battery 43
Checking the Fuses 44
Drive System Maintenance 44
Adjusting the Traction Drive for Neutral 44
Adjusting the Rear Wheel Toe-in 45
Cooling System Maintenance 45
Removing Debris from the Cooling System 45
Brake Maintenance 46
Adjusting the Parking Brakes 46
Adjusting the Parking Brake Latch 47
Belt Maintenance 47
Tensioning the Alternator Belt 47
Hydraulic System Maintenance 48
Changing the Hydraulic Fluid 48
Replacing the Hydraulic Filters 48
Checking the Hydraulic Lines and Hoses 49
Using the Hydraulic System Test Ports 49
Cutting Unit System Maintenance 50
Backlapping the Cutting Units 50
Storage 51
Preparing the Traction Unit 51
Preparing the Engine 51

Safety

This machine has been designed in accordance with EN ISO 5395:2013 and ANSI B71.4-2012.

Improperly using or maintaining the machine can result in injury. To reduce the potential for injury, comply with these safety instructions and always pay attention to the safety alert symbol, which means Caution, Warning, or Danger—personal safety instruction. Failure to comply with the instruction may result in personal injury or death.

Safe Operating Practices

Training

- Read the operator's manual and other training material carefully. Be familiar with the controls, safety signs, and the proper use of the equipment.
- Never allow children or people unfamiliar with these instructions to use or service the mower. Local regulations may restrict the age of the operator.
- Never mow while people, especially children, or pets are nearby.
- Do not carry passengers.
- All drivers and mechanics should seek and obtain professional and practical instruction. The owner is responsible for training the users. Such instruction should emphasize:
  - the need for care and concentration when working with ride-on machines;
  - control of a ride-on machine sliding on a slope will not be regained by the application of the brake. The main reasons for loss of control are:
    - ◊ insufficient wheel grip;
    - ◊ being driven too fast;
    - ◊ inadequate braking;
    - ◊ the type of machine is unsuitable for its task;
    - ◊ lack of awareness of the effect of ground conditions, especially slopes;
    - ◊ incorrect hitching and load distribution.
- The owner/user can prevent and is responsible for accidents or hazards occurring to other people or their property.

Preparation

- While mowing, always wear substantial, slip-resistant footwear, long trousers, hard hat, safety glasses, and ear protection. Long hair, loose clothing, or jewelry may get tangled in moving parts. Do not operate the equipment when barefoot or wearing open sandals.
- Thoroughly inspect the area where the equipment is to be used and remove all objects which may be thrown by the machine.
- Replace faulty silencers/mufflers.
- Evaluate the terrain to determine what accessories and attachments are needed to properly and safely perform the job. Only use accessories and attachments approved by the manufacturer.
- Check that the operator's presence controls, safety switches and shields are attached and functioning properly. Do not operate unless they are functioning properly.

Safe Handling of Fuels

- To avoid personal injury or property damage, use extreme care in handling gasoline. Gasoline is extremely flammable and the vapors are explosive.
- Extinguish all cigarettes, cigars, pipes, and other sources of ignition.
- Use only an approved fuel container.
- Never remove fuel cap or add fuel with the engine running.
- Allow engine to cool before refueling.
- Never refuel the machine indoors.
- Never store the machine or fuel container where there is an open flame, spark, or pilot light such as on a water heater or on other appliances.
- Never fill containers inside a vehicle or on a truck or trailer bed with a plastic liner. Always place containers on the ground away from your vehicle before filling.
- Remove equipment from the truck or trailer and refuel it on the ground. If this is not possible, then refuel such equipment with a portable container, rather than from a fuel dispenser nozzle.
- Keep the nozzle in contact with the rim of the fuel tank or container opening at all times until fueling is complete. Do not use a nozzle lock open device.
- If fuel is spilled on clothing, change clothing immediately.
- Never overfill fuel tank. Replace fuel cap and tighten securely.

Operation

- Do not operate the engine in a confined space where dangerous carbon monoxide and exhaust gases can collect.
- Mow only in daylight or in good artificial light.
- Before attempting to start the engine, disengage all blade attachment clutches, shift into neutral, and engage the parking brake.

- Remember there is no such thing as a safe slope. Travel on grass slopes requires particular care. To guard against overturning:
  - do not stop or start suddenly when going up or downhill;
  - machine speeds should be kept low on slopes and during tight turns;
  - stay alert for humps and hollows and other hidden hazards;
  - Do not turn sharply. Use care when reversing.
  - Use counterweight(s) or wheel weights when suggested in the operator's manual.
- Stay alert for holes in the terrain and other hidden hazards.
- Watch out for traffic when crossing or near roadways.
- Stop the blades rotating before crossing surfaces other than grass.
- When using any attachments, never direct discharge of material toward bystanders nor allow anyone near the machine while in operation.
- Never operate the machine with damaged guards, shields, or without safety protective devices in place. Be sure all interlocks are attached, adjusted properly, and functioning properly.
- Do not change the engine governor settings or over-speed the engine. Operating the engine at excessive speed may increase the hazard of personal injury.
- Before leaving the operator's position:
  - stop on level ground;
  - disengage the power take-off and lower the attachments;
  - change into neutral and set the parking brake;
  - stop the engine and remove the key.
- Disengage drive to attachments when transporting or not in use.
- Stop the engine and disengage drive to attachment:
  - before refuelling;
  - before removing the grass catcher/catchers;
  - before making height adjustment unless adjustment can be made from the operator's position.
  - before clearing blockages;
  - before checking, cleaning or working on the mower;
  - after striking a foreign object or if an abnormal vibration occurs. Inspect the mower for damage and make repairs before restarting and operating the equipment.
- Reduce the throttle setting during engine run-out and, if the engine is provided with a shut-off valve, turn the fuel off at the conclusion of mowing.
- Keep hands and feet away from the cutting units.
- Look behind and down before backing up to be sure of a clear path.
- Slow down and use caution when making turns and crossing roads and sidewalks. Stop cylinders/reels if not mowing.
- Do not operate the mower under the influence of alcohol or drugs.
- Lightning can cause severe injury or death. If lightning is seen or thunder is heard in the area, do not operate the machine; seek shelter.
- Use care when loading or unloading the machine into a trailer or truck.
- Use care when approaching blind corners, shrubs, trees, or other objects that may obscure vision.

Maintenance and Storage

- Keep all nuts, bolts and screws tight to be sure the equipment is in safe working condition.
- Never store the equipment with fuel in the tank inside a building where fumes may reach an open flame or spark.
- Allow the engine to cool before storing in any enclosure.
- To reduce the fire hazard, keep the engine, silencer/muffler, battery compartment and fuel storage area free of grass, leaves, or excessive grease.
- Check the grass catcher frequently for wear or deterioration.
- Keep all parts in good working condition and all hardware and hydraulic fittings tightened. Replace all worn or damaged parts and decals.
- If the fuel tank has to be drained, do this outdoors.
- Be careful during adjustment of the machine to prevent entrapment of the fingers between moving blades and fixed parts of the machine.
- On multi-cylinder/multi-reel machines, take care as rotating one cylinder/reel can cause other cylinders/reels to rotate.
- Disengage drives, lower the cutting units, set parking brake, stop engine and remove key from ignition. Wait for all movement to stop before adjusting, cleaning or repairing.
- Clean grass and debris from cutting units, drives, silencers/mufflers, and engine to help prevent fires. Clean up oil or fuel spillage.
- Use jack stands to support components when required.
- Carefully release pressure from components with stored energy.
- Disconnect battery before making any repairs. Disconnect the negative terminal first and the positive last. Reconnect positive first and negative last.
- Use care when checking the cylinders/reels. Wear gloves and use caution when servicing them.
- Keep hands and feet away from moving parts. If possible, do not make adjustments with the engine running.
- Charge batteries in an open well ventilated area, away from spark and flames. Unplug charger before connecting

or disconnecting from battery. Wear protective clothing and use insulated tools.

Hauling

- Use care when loading or unloading the machine into a trailer or truck.
- Use full width ramps for loading machine into trailer or truck.
- Tie the machine down securely using straps, chains, cable, or ropes. Both front and rear straps should be directed down and outward from the machine

Toro Riding Mower Safety

The following list contains safety information specific to Toro products or other safety information that you must know that is not included in the CEN, ISO, or ANSI standard.

This product is capable of amputating hands and feet and throwing objects. Always follow all safety instructions to avoid serious injury or death.

Use of this product for purposes other than its intended use could prove dangerous to user and bystanders.

⚠ WARNING

Engine exhaust contains carbon monoxide, which is an odorless, deadly poison that can kill you.

Do not run engine indoors or in an enclosed area.

- Know how to stop the engine quickly.
- Do not operate the machine while wearing tennis shoes or sneakers.
- Wearing safety shoes and long pants is advisable and required by some local ordinances and insurance regulations.
- Handle fuel carefully. Wipe up any spills.
- Check the safety interlock switches daily for proper operation. If a switch should fail, replace the switch before operating the machine.
- Before starting the engine, sit on the seat.
- Using the machine demands attention. To prevent loss of control:
  - Do not drive close to sand traps, ditches, creeks, or other hazards.
  - Reduce speed when making sharp turns. Avoid sudden stops and starts.
  - When near or crossing roads, always yield the right-of-way.
  - Apply the service brakes when going downhill to keep forward speed slow and to maintain control of the machine.
- Raise the cutting units when driving from one work area to another.
- Do not touch the engine, silencer/muffler, or exhaust pipe while the engine is running or soon after it has stopped because these areas could be hot enough to cause burns.
- If the engine stalls or loses headway and cannot make it to the top of a slope, do not turn the machine around. Always back slowly, straight down the slope.
- When a person or pet appears unexpectedly in or near the mowing area, stop mowing. Careless operation, combined with terrain angles, ricochets, or improperly positioned guards can lead to thrown object injuries. Do not resume mowing until the area is cleared.

Maintenance and Storage

- Make sure all hydraulic line connectors are tight and all hydraulic hoses and lines are in good condition before applying pressure to the system.
- Keep your body and hands away from pin hole leaks or nozzles that eject hydraulic fluid under high pressure. Use paper or cardboard, not your hands, to search for leaks. Hydraulic fluid escaping under pressure can have sufficient force to penetrate the skin and cause serious injury. Seek immediate medical attention if fluid is injected into skin.
- Before disconnecting or performing any work on the hydraulic system, all pressure in the system must be relieved by stopping the engine and lowering the cutting units and attachments to the ground.
- Check all fuel lines for tightness and wear on a regular basis. Tighten or repair them as needed.
- If the engine must be running to perform a maintenance adjustment, keep hands, feet, clothing, and any parts of the body away from the cutting units, attachments, and any moving parts. Keep everyone away.
- To ensure safety and accuracy, have an Authorized Toro Distributor check the maximum engine speed with a tachometer. Maximum governed engine speed should be 3200 RPM.
- If major repairs are ever needed or if assistance is desired, contact an Authorized Toro Distributor.
- Use only Toro-approved attachments and replacement parts. The warranty may be voided if used with unapproved attachments.

Sound Power Level

Model 03675 and 03676

This unit has a guaranteed sound power level of 103 dBA, which includes an Uncertainty Value (K) of 1 dBA.

Sound power level was determined according to the procedures outlined in ISO 11094.

Sound Power Level

Model 03677

This unit has a guaranteed sound power level of 105 dBA, which includes an Uncertainty Value (K) of 1 dBA.

Sound power level was determined according to the procedures outlined in ISO 11094.

Sound Pressure Level

Model 03675

This unit has a sound pressure level at the operator's ear of 86 dBA, which includes an Uncertainty Value (K) of 1 dBA.

Sound pressure level was determined according to the procedures outlined in EN ISO 5395:2013.

Sound Pressure Level

Model 03676 and 03677

This unit has a sound pressure level at the operator's ear of 84 dBA, which includes an Uncertainty Value (K) of 1 dBA.

Sound pressure level was determined according to the procedures outlined in EN ISO 5395:2013.

Vibration Level

Model 03675

Hand-Arm

Measured vibration level for right hand = 0.59 m/s^2

Measured vibration level for left hand = 0.54 m/s^2

Uncertainty Value (K) = 0.5 m/s^2

Measured values were determined according to the procedures outlined in EN ISO 5395:2013.

Whole Body

Measured vibration level = 0.44 m/s^2

Uncertainty Value (K) = 0.5 m/s^2

Measured values were determined according to the procedures outlined in EN ISO 5395:2013.

Vibration Level

Model 03676

Hand-Arm

Measured vibration level for right hand = 0.37 m/s^2

Measured vibration level for left hand = 0.51 m/s^2

Uncertainty Value (K) = 0.5 m/s^2

Measured values were determined according to the procedures outlined in EN ISO 5395:2013.

Whole Body

Measured vibration level = 0.5 m/s^2

Uncertainty Value (K) = 0.5 m/s^2

Measured values were determined according to the procedures outlined in EN ISO 5395:2013.

Vibration Level

Model 03677

Hand-Arm

Measured vibration level for right hand = 0.84 m/s^2

Measured vibration level for left hand = 0.77 m/s^2

Uncertainty Value (K) = 0.5 m/s^2

Measured values were determined according to the procedures outlined in EN ISO 5395:2013.

Whole Body

Measured vibration level = 0.27 m/s^2

Uncertainty Value (K) = 0.5 m/s^2

Measured values were determined according to the procedures outlined in EN ISO 5395:2013.

Safety and Instructional Decals

Safety decals and instructions are easily visible to the operator and are located near any area of potential danger. Replace any decal that is damaged or lost.

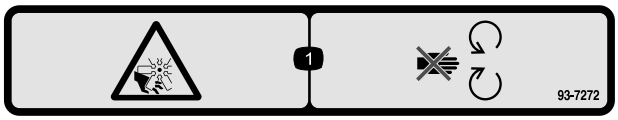

93-7272

1. Cutting/dismemberment hazard; fan—stay away from moving parts.

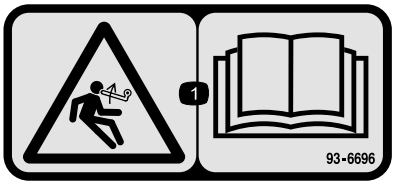

93–6696

1. Stored energy hazard—read the *Operator's Manual*.

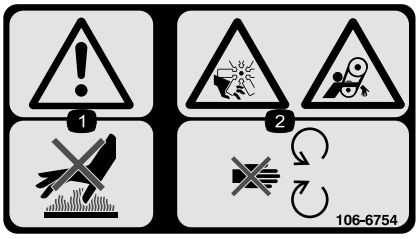

106-6754

1. Warning—do not touch the hot surface.
2. Cutting/dismemberment hazard, fan and entanglement hazard, belt—stay away from moving parts.

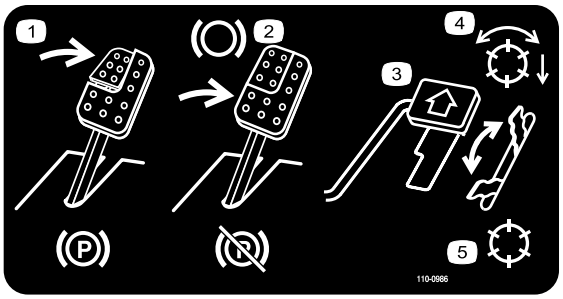

110-0986

1. Press the brake pedal and parking brake pedal to set the parking brake.
2. Press the brake pedal to apply the brake.
3. Press the traction pedal to move the machine forward.
4. Reel enabled mode
5. Transport mode

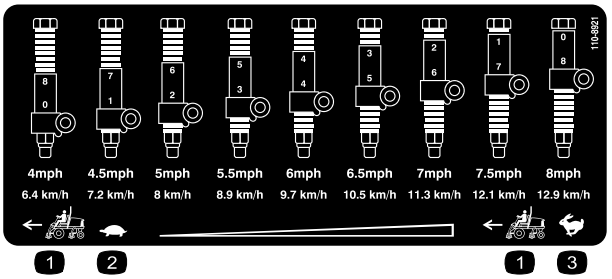

110-8921

1. Traction unit speed
2. Slow
3. Fast

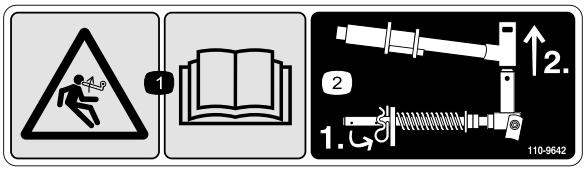

110-9642

1. Stored energy hazard—read the *Operator's Manual.*
2. Move the cotter pin to the hole closest to the rod bracket and then remove the lift arm and pivot yoke.



106-6755

1. Engine coolant under pressure.
2. Explosion hazard—read the *Operator's Manual.*
3. Warning—do not touch the hot surface.
4. Warning—read the *Operator's Manual.*

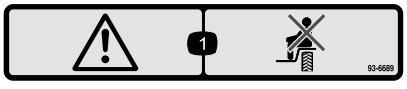

93-6689

1. Warning—do not carry passengers.

CALIFORNIA SPARK ARRESTER WARNING

Operation of this equipment may create sparks that can start fires around dry vegetation. A spark arrester may be required. The operator should contact local fire agencies for laws or regulations relating to fire prevention requirements. 117-2718

117–2718



Battery Symbols

Some or all of these symbols are on your battery

1. Explosion hazard
2. No fire, open flame, or smoking.
3. Caustic liquid/chemical burn hazard
4. Wear eye protection
5. Read the *Operator's Manual.*
6. Keep bystanders a safe distance from the battery.
7. Wear eye protection; explosive gases can cause blindness and other injuries
8. Battery acid can cause blindness or severe burns.
9. Flush eyes immediately with water and get medical help fast.
10. Contains lead; do not discard.

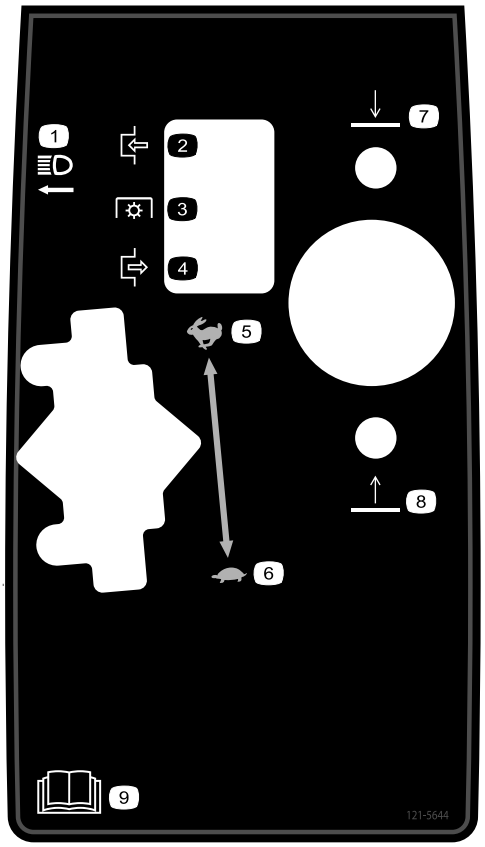

121–5644

1. Light switch
2. Engage
3. Power take-off
4. Disengage
5. Fast
6. Slow
7. Lower
8. Raise
9. Read the *Operator's Manual*.

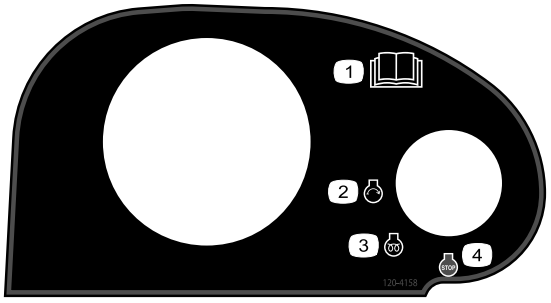

120–4158

1. Read the *Operator's Manual*.
2. Engine—start
3. Engine—preheat
4. Engine—stop

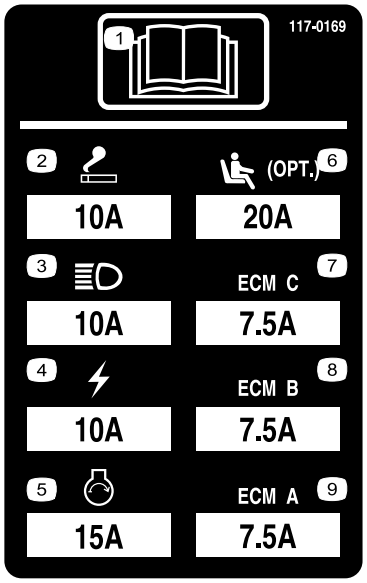

117–0169

1. Read the *Operator's Manual.*
2. Power point—10 amp
3. Head lights—10 amp
4. Power—10 amp
5. Engine start—15 amp
6. Optional air ride seat suspension—20 amp
7. Engine computer management C—7.5 amp
8. Engine computer management B—7.5 amp
9. Engine computer management A—7.5 amp

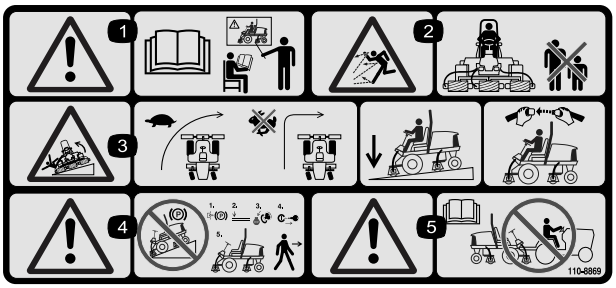

110-8869

1. Warning—read the *Operator's Manual*, do not operate this machine unless you are trained.
2. Thrown object hazard—keep bystanders a safe distance from the machine.
3. Tipping hazard—slow machine before turning, do not turn at high speeds; lower the cutting unit when driving down slopes; use a roll over protection system and wear the seat belt. Always wear a seat belt when a ROPS is in place.
4. Warning—do not park the machine on slopes; engage the parking brake, lower the cutting decks, stop the engine and remove the ignition key before leaving the machine.
5. Warning—read the *Operator's Manual*, do not tow the machine.

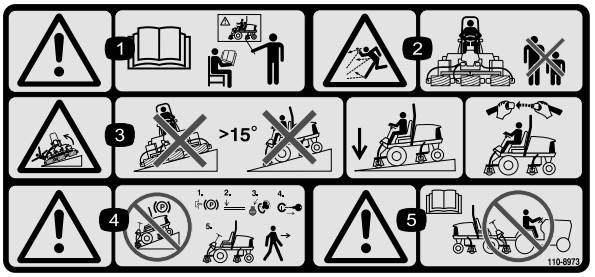

110-8973

(Affix over part no. 110–8869 for CE*)

* This safety decal includes a slope warning required on the machine for compliance to the European Lawn Mower Safety Standard EN ISO 5395:2013. The conservative maximum slope angles indicated for operation of this machine are prescribed by and required by this standard.

1. Warning—read the *Operator's Manual*, do not operate this machine unless you are trained.
2. Thrown object hazard—keep bystanders a safe distance from the machine.
3. Tipping hazard—do not operate on slopes greater than 15°; lower the cutting decks when operating on slopes; wear the safety belt.
4. Warning—do not park the machine on slopes; engage the parking brake, lower the cutting decks, stop the engine and remove the ignition key before leaving the machine
5. Warning—read the *Operator's Manual* before towing the machine.

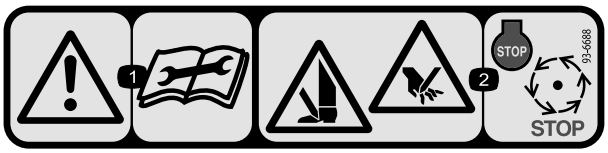

93-6688

1. Warning—read the instructions before servicing or performing maintenance.
2. Cutting hazard of hand or foot—stop the engine and wait for moving parts to stop.

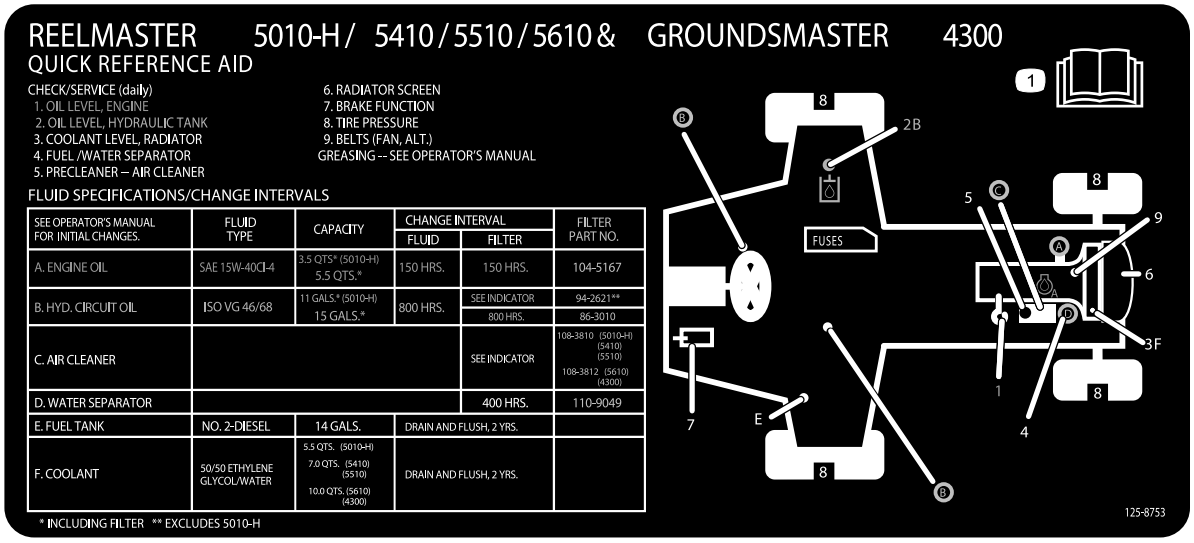

125-8753

1. Read the *Operator's Manual* for more maintenance information.

Setup

Loose Parts

Use the chart below to verify that all parts have been shipped.

Procedure	Description	Qty.	Use
1	No parts required	–	Adjust the tire pressure.
2	No parts required	–	Adjust the step height.
3	No parts required	–	Adjust the control arm position.
4	Front hose guide-R.H. Front hose guide-L.H.	1 1	Install the cutting units
5	No parts required	–	Adjust the turf compensation spring.
6	Hood latch assembly Washer	1 1	Install the CE hood latch.
7	Cutting unit kickstand	1	Use the cutting unit kickstand.

Media and Additional Parts

Description	Qty.	Use
Operator's Manual Engine operator's manual	1 1	Read the manuals before operating the machine.
Parts Catalog	1	Use to the Parts Catalog to reference part numbers.
Declaration of Conformity	1	This document indicates conformity with certain standards.
Operator training material	1	Review the training material before operating the machine.

Note: Determine the left and right sides of the machine from the normal operating position.

1

Adjusting the Tire Pressure

No Parts Required

Procedure

The tires are over-inflated for shipping. Therefore, release some of the air to reduce the pressure. Correct air pressure in the front and rear tires is 83 to 103 kPa (12 to 15 psi).

Important: Maintain even pressure in all tires to ensure uniform contact with the turf.

2

Adjusting the Step Height

No Parts Required

Procedure

You can adjust the height of the steps for better comfort.

1. Remove the 2 bolts and nuts securing the step brackets to the traction unit frame (Figure 2)

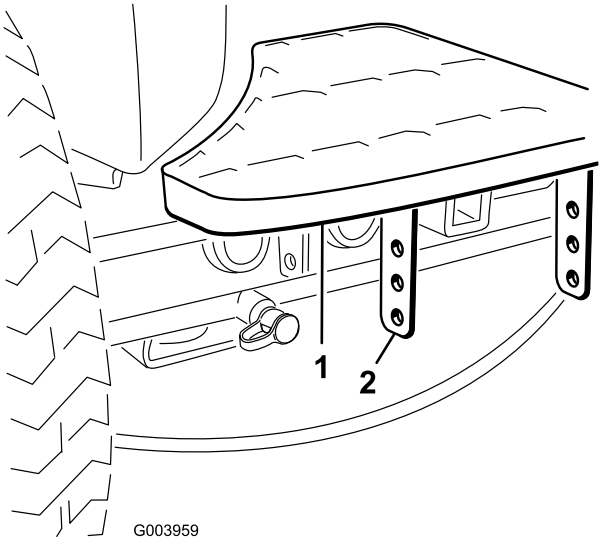

Figure 2

1. Step
2. Step brackets

2. Raise or lower the step to the desired height and secure the brackets to the frame with the 2 bolts and nuts.
3. Repeat the procedure on the other step.

3

Adjusting the Control Arm Position

No Parts Required

Procedure

The control arm position can be adjusted for the operators comfort.

1. Loosen the 2 bolts securing the control arm to the retaining bracket (Figure 3).

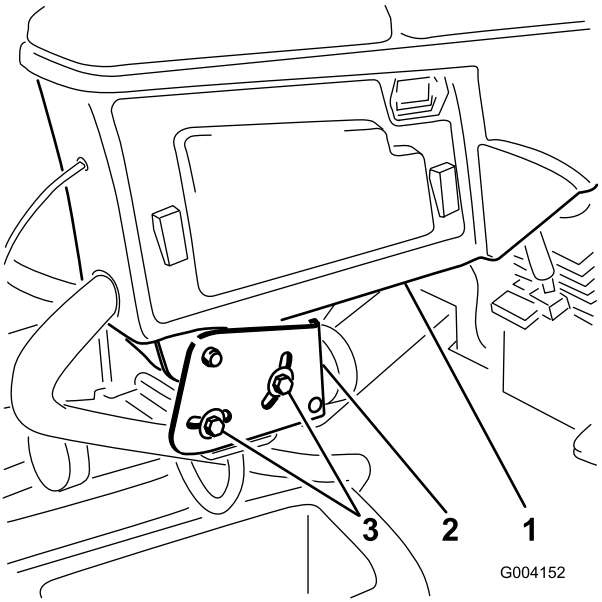

Figure 3

1. Control arm
2. Retaining brackets
3. Bolts (2)

2. Rotate the control arm to the desired position and tighten the 2 bolts.

4

Installing the Cutting Units

Parts needed for this procedure:

1	Front hose guide-R.H.
1	Front hose guide-L.H.

Procedure

1. Remove the reel motors from the shipping brackets.
2. Remove the shipping brackets and discard.
3. Remove the cutting units from the cartons. Assemble and adjust as described in the cutting unit *Operator's Manual*.
4. Make sure the counter weight (Figure 4) is installed to the proper end of the cutting unit as described in the cutting unit *Operator's Manual*.

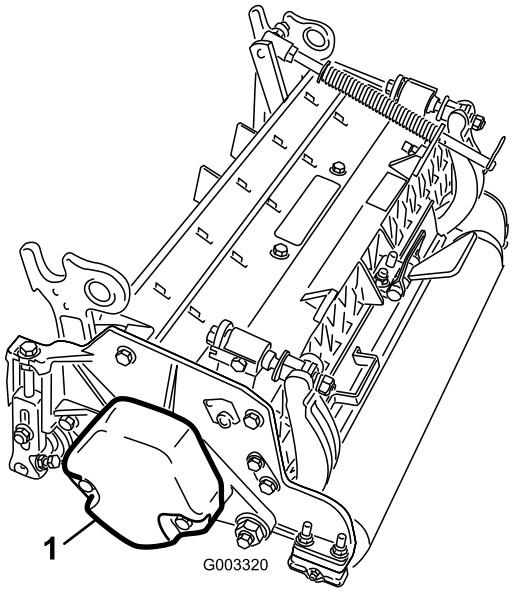

Figure 4

1. Counter weight

5. All the cutting units are shipped with the turf compensation spring mounted to the right side of the cutting unit. The turf compensation spring must be mounted to the same side of the cutting unit as the reel drive motor. Reposition the turf compensation as follows:

   A. Remove the 2 carriage bolts and nuts securing the rod bracket to the cutting unit tabs (Figure 5).

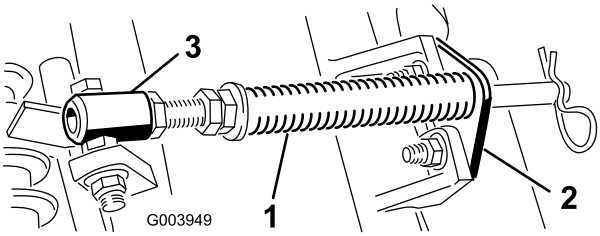

Figure 5

1. Turf compensation spring
2. Rod bracket
3. Spring tube

   B. Remove the flange nut securing the spring tube bolt to the carrier frame tab (Figure 5) Remove the assembly.

   C. Mount the spring tube bolt to the opposite tab on the carrier frame and secure with the flange nut. The bolt head is to be positioned to the outer side of the tab as shown in Figure 6.

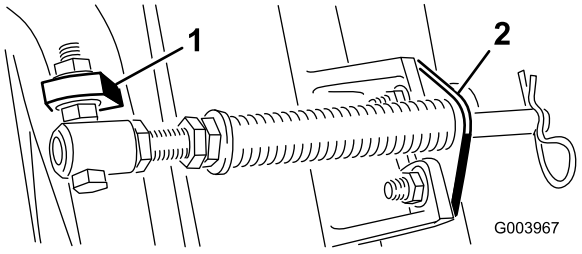

Figure 6

1. Opposite carrier frame tab
2. Rod bracket

   D. Mount the rod bracket to the cutting unit tabs with the carriage bolts and nuts (Figure 6).

   Important: On the #4 (left front) and #5 (right front) cutting units (Figure 7), use the rod bracket mounting nuts to install the hose guides to the front of the cutting unit tabs (Figure 8). The hose guides should lean toward the center cutting unit (Figure 8 and Figure 9).

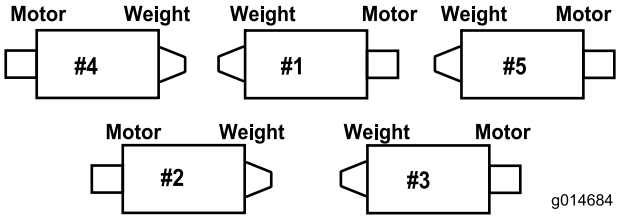

Figure 7

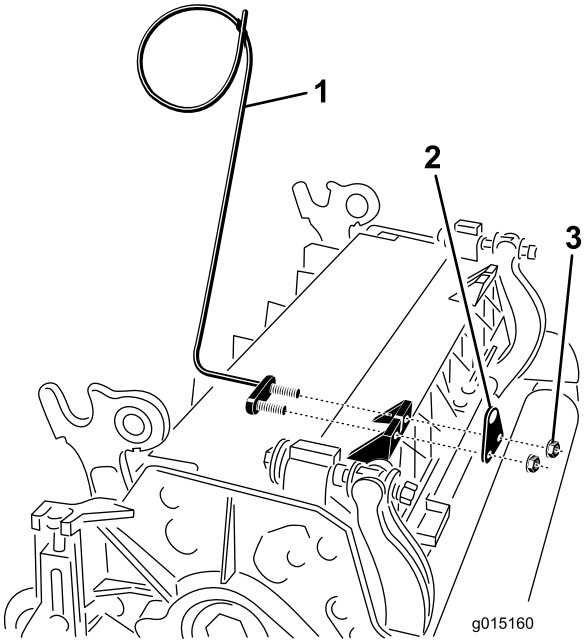

Figure 8

1. Hose guide (#4 cutting unit shown)
2. Rod bracket
3. Nuts

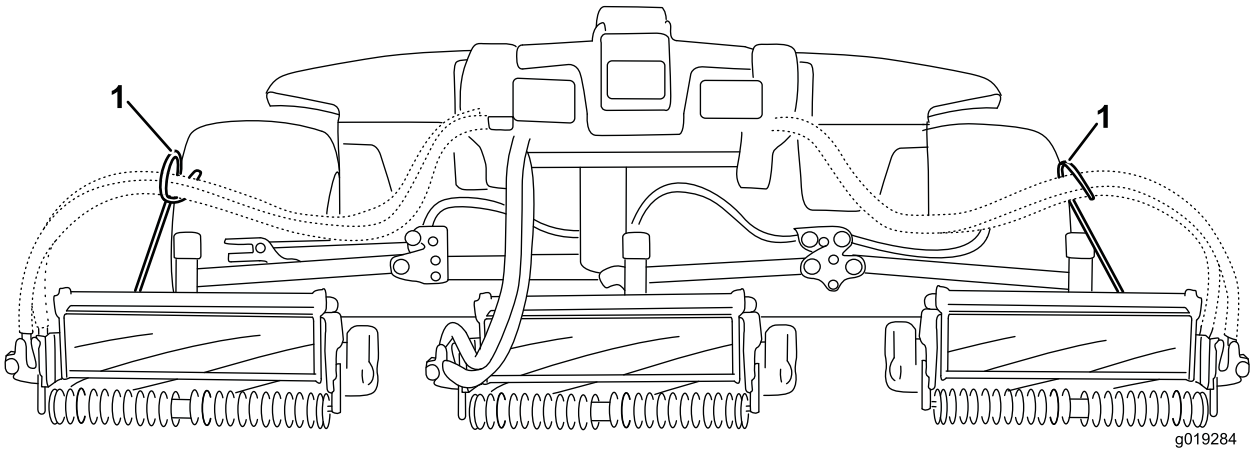

Figure 9

1. Hose guides (each must lean toward the center cutting unit)

Note: When installing or removing the cutting units, make sure the hairpin cotter is installed in the spring rod hole next to the rod bracket. Otherwise, the hairpin cotter must be installed in the hole in the end of the rod.

6. Lower all the lift arms completely.
7. Remove the snapper pin and the cap from the lift arm pivot yoke (Figure 10).

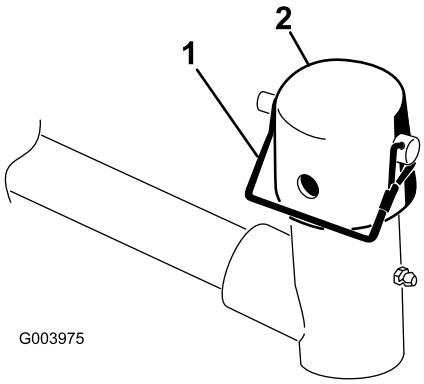

Figure 10

1. Snapper pin
2. Cap

8. For the front cutting units, slide a cutting unit under the lift arm while inserting the carrier frame shaft up into the lift arm pivot yoke (Figure 11).

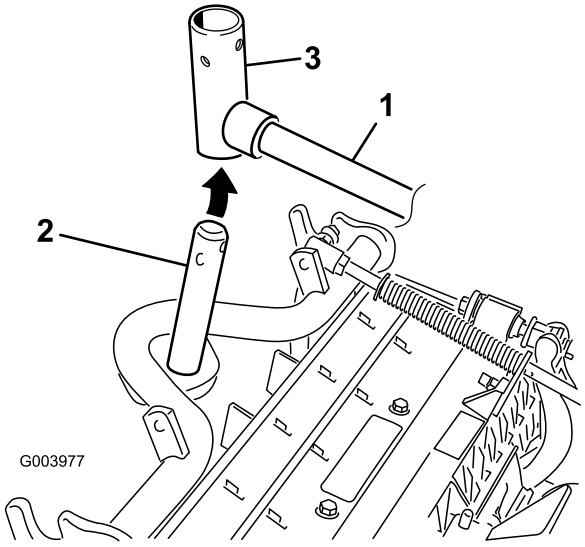

Figure 11

1. Lift arm
2. Carrier frame shaft
3. Lift arm pivot yoke

9. Use the following procedure on the rear cutting units when the height of cut is above 3/4 inch.
   A. Remove the lynch pin and washer securing the lift arm pivot shaft to the lift arm and slide the lift arm pivot shaft out of the lift arm (Figure 12).

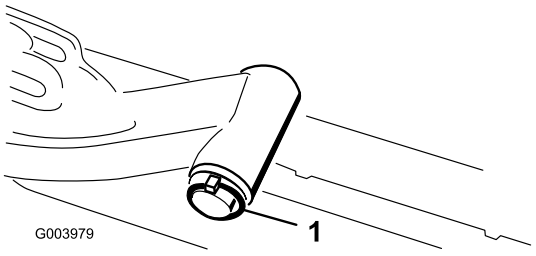

Figure 12

1. Lift arm pivot shaft lynch pin and washer

B. Insert the lift arm yoke onto the carrier frame shaft (Figure 11).

C. Insert the lift arm shaft into the lift arm and secure it with the washer and lynch pin (Figure 12).

10. Insert the cap over the carrier frame shaft and lift arm yoke.

11. Secure the cap and the carrier frame shaft to the lift arm yoke with the snapper pin. Use the slot if a steering cutting unit is desired or use the hole if the cutting unit is to be locked in position (Figure 10).

12. Secure the lift arm chain to the chain bracket with the snapper pin (Figure 13). Use the number of chain links described in the cutting unit *Operator's Manual*.

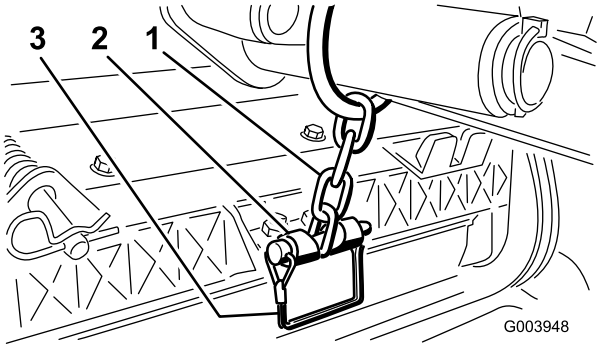

Figure 13

1. Lift arm chain
2. Chain bracket
3. Snapper pin

13. On the #4 (left front) and #5 (right front) cutting units, insert the reel motor hoses into the respective hose guide.

14. Coat the spline shaft of the reel motor with clean grease.

15. Oil the reel motor O-ring and install it onto the motor flange.

16. Install the motor by rotating it clockwise so that the motor flanges clear the bolts (Figure 14). Rotate the motor counterclockwise until the flanges encircle the bolts then tighten the bolts.

Important: Make sure the reel motor hoses are not twisted, kinked or in the risk of being pinched.

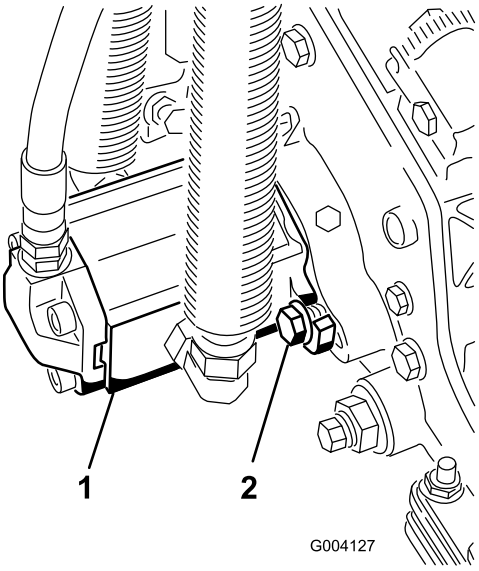

Figure 14

1. Reel drive motor
2. Mounting bolts

5

Adjusting the Turf Compensation Spring

No Parts Required

Procedure

The turf compensation spring (Figure 15) transfers weight from the front to the rear roller. (This helps to reduce a wave pattern in the turf, also known as marcelling or bobbing.)

Important: Make spring adjustments with the cutting unit mounted to the traction unit, pointing straight ahead and lowered to the shop floor.

1. Make sure the hairpin cotter is installed in the rear hole in the spring rod (Figure 15).

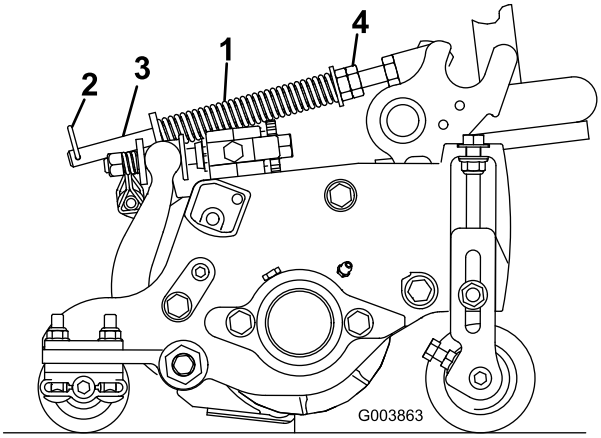

Figure 15

1. Turf compensation spring
2. Hair pin cotter
3. Spring rod
4. Hex nuts

2. Tighten the hex nuts on the front end of the spring rod until the compressed length of the spring is 12.7 cm (5 inches) on Reelmaster 5410, 5-inch cutting units or 15.9 cm (6.25 inches) on Reelmaster 5510 and 5610, 7-inch cutting units (Figure 15).

   Note: When operating on rough terrain decrease the spring length by 13 mm (1/2 inch). Ground following will be slightly decreased.

6

Installing the CE Hood Latch

Parts needed for this procedure:

1	Hood latch assembly
1	Washer

Procedure

1. Unlatch and raise the hood.
2. Remove the rubber grommet from the hole in the left side of the hood (Figure 16).

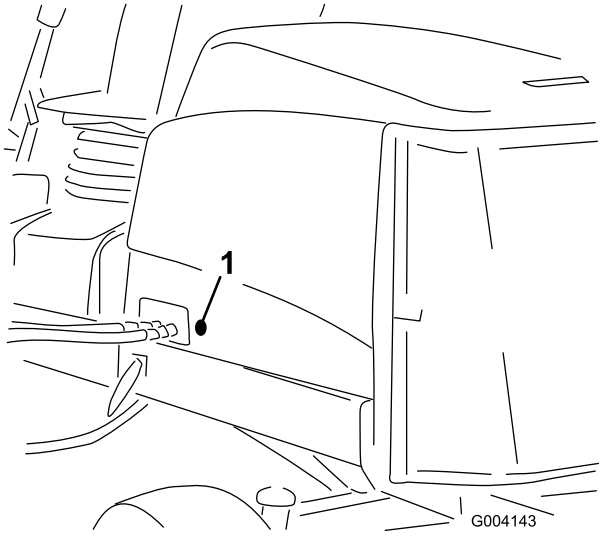

Figure 16

1. Rubber grommet

3. Remove the nut from the hood latch assembly (Figure 17).

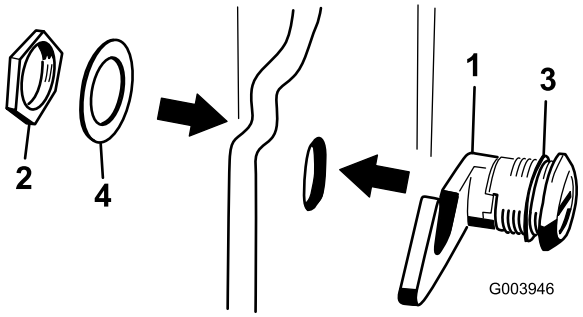

Figure 17

1. Hood latch
2. Nut
3. Rubber washer
4. Metal washer

4. Outside the hood, insert the hook end of the latch through the hole in the hood. Make sure that the rubber sealing washer remains to the outer side of the hood (Figure 17).
5. Inside the hood, insert the metal washer onto the latch and secure with the nut. Make sure that the latch engages the frame catch when it is locked. Use the enclosed hood latch key to operate the hood latch.

7

Using the Cutting Unit Kickstand

Parts needed for this procedure:

1	Cutting unit kickstand

Procedure

Whenever the cutting unit has to be tipped to expose the bedknife and the reel, prop up the rear of the cutting unit with the kickstand to make sure that the nuts on the back end of the bedbar adjusting screws are not resting on the work surface (Figure 18).

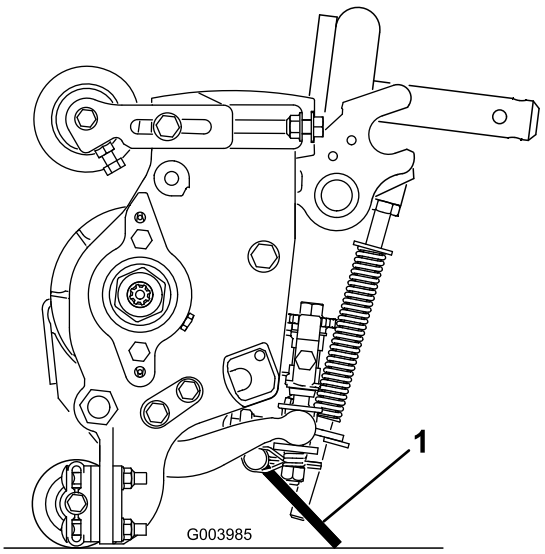

Figure 18

1. Cutting unit kickstand

Secure the kickstand to the chain bracket with the snapper pin (Figure 19).

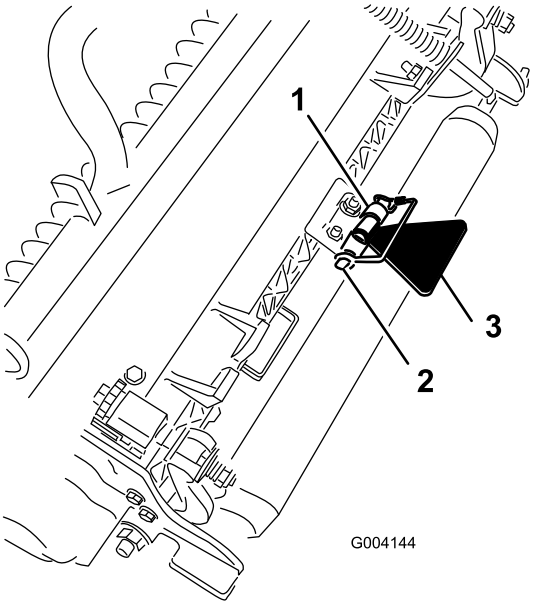

Figure 19

1. Chain bracket
2. Snapper pin
3. Cutting unit kickstand

Product Overview

Controls

Seat Adjusting Knobs

The seat adjusting lever (Figure 20) allows you to adjust the seat fore and aft. The weight adjusting knob adjusts the seat for the operator's weight. The weight gauge indicates when the seat is adjusted to the weight of the operator. The height adjusting knob adjusts the seat for the operator's height.

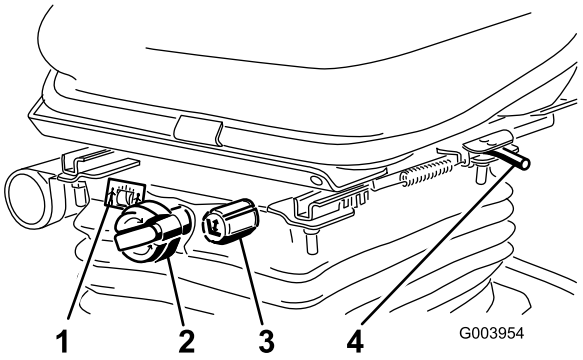

Figure 20

1. Weight gauge
2. Weight adjusting knob
3. Height adjusting knob
4. Adjusting lever (fore and aft)

Traction Pedal

The traction pedal (Figure 21) controls the forward and reverse operation. Press the top of the pedal to move the machine forward and the bottom to move the machine backward. Ground speed depends on how far you press the pedal. For no load, maximum ground speed, fully press the pedal while the throttle is in the Fast position.

To stop the machine, reduce foot pressure on the traction pedal and allow it to return to the center position.

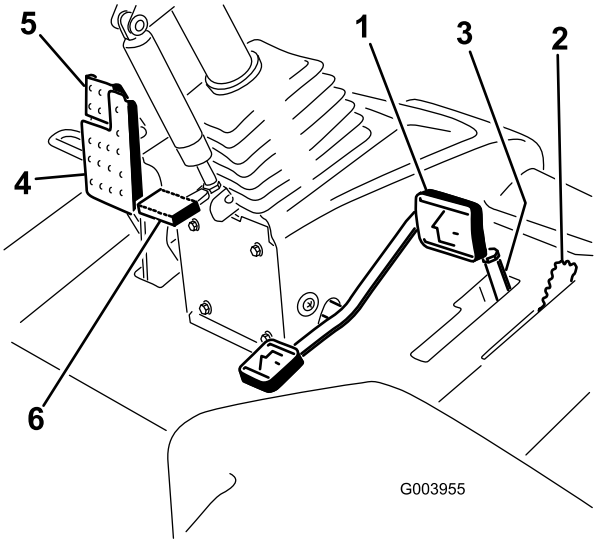

Figure 21

1. Traction pedal
2. Mow/transport lever
3. Mow speed limiter and spacers
4. Brake pedal
5. Parking brake
6. Tilt steering pedal

Mow/Transport Lever

Use the mow/transport lever (Figure 21) to put the machine into Mow mode or Transport mode. Push the lever forward to select the Mow mode, and backward to select the Transport mode.

Note: The cutting units cannot be lowered when the mow/transport lever is in the transport position.

Mow Speed Limiter

When the mow speed limiter (Figure 21) is flipped up/forward it limits the mow speed and allow the cutting units to be engaged. Each spacer adjusts the mowing speed by 0.8 km/h (½ mph). The more spacers there are on the top of the bolt, the slower the machine goes. Flip the mow speed limiter backward to allow maximum transport speed.

Brake Pedal

Press the brake pedal (Figure 21) to stop the machine.

Parking Brake

To engage the parking brake, (Figure 21) push down on the brake pedal and press the top forward to latch it. To release the parking brake, press the brake pedal until the parking brake latch retracts.

Tilt Steering Pedal

To tilt the steering wheel towards you, press the foot pedal (Figure 21) down, and pull the steering tower toward you to the most comfortable position and then release the pedal.

Throttle Control

Move the throttle control (Figure 22) forward to increase the engine speed and rearward to decrease speed.

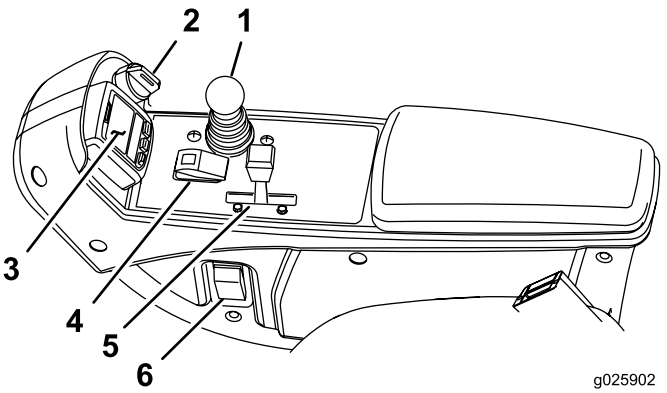

Figure 22

1. Lower mow/raise control lever
2. Key switch
3. InfoCenter
4. Enable/disable switch
5. Throttle control
6. Headlight switch

Key Switch

The key switch (Figure 22) has 3 positions: Off, On/Preheat, and Start.

Lower Mow/Raise Control Lever

This lever (Figure 22) raises and lowers the cutting units and also starts and stops the cutterheads when the cutterheads are enabled in the mow mode.

Headlight Switch

Pivot the switch downward to turn on the headlights (Figure 22).

Enable/Disable Switch

Use the enable/disable switch (Figure 22) in conjunction with the lower mow/raise control lever to operate the cutterheads. The cutterheads cannot be lowered when the mow/transport lever is in the transport position.

Backlap Levers

Use the backlap levers in conjunction with the lower mow/raise control lever for backlapping the reels (Figure 23).

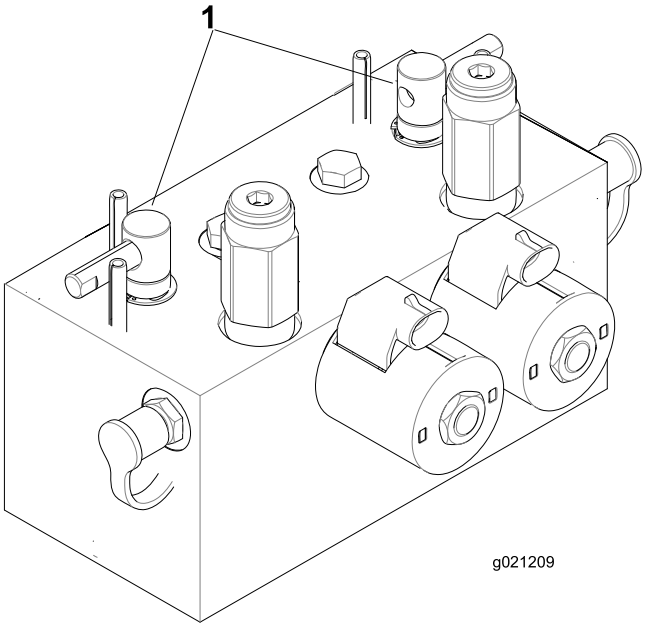

Figure 23

1. Backlap levers

Hydraulic Filter Restriction Indicator

With the engine running at normal operating temperature, view the indicator (Figure 24), it should be in the green zone. When the indicator is in the red zone, change the hydraulic filters.

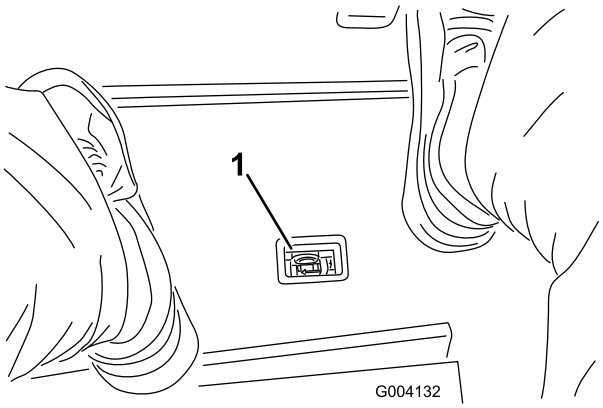

Figure 24

1. Hydraulic filter restriction indicator

Power Point

The power point is a 12-volt power supply for electronic devices (Figure 25).

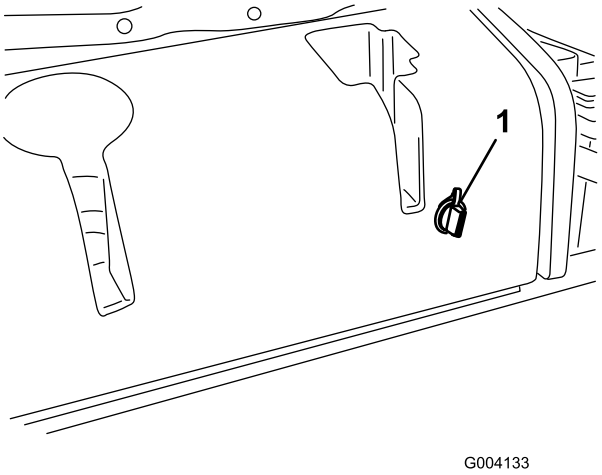

Figure 25

1. Power point

Using the InfoCenter LCD Display

The InfoCenter LCD display shows information about your machine such as the operating status, various diagnostics and other information about the machine (Figure 26) There is a splash screen and main information screen of the InfoCenter. You can switch between the splash screen and main information screen, at any time, by pressing any of the InfoCenter buttons and then selecting the appropriate directional arrow.

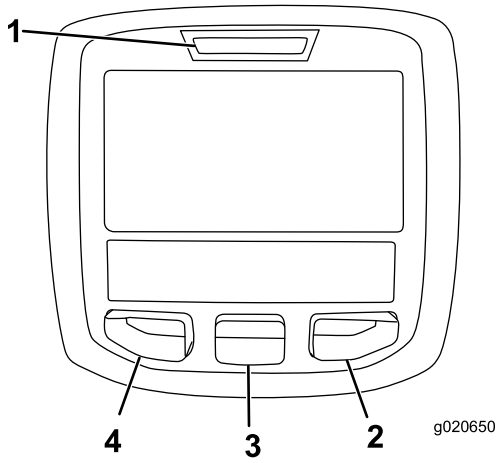

Figure 26

1. Indicator light
2. Right button
3. Middle button
4. Left button

- Left button, menu access / back button—press this button to access the InfoCenter menus. You can use it to back out of any menu you are currently using.
- Middle button—use this button to scroll down menus.
- Right button—use this button to open a menu where a right arrow indicates additional content.

Note: The purpose of each button may change depending on what is required at the time. Each button will be labeled with an icon displaying its current function.

InfoCenter Icon Description

SERVICE DUE	Indicates when scheduled service should be performed
	Hour meter
	Info icon
	Fast
	Slow
	Fuel level

InfoCenter Icon Description (cont'd.)

	Glow plugs are active
	Raise cutting units
	Lower cutting units
	Operator must sit in seat
	Parking Brake Indicator—indicates when the parking brake is On
H	Identifies the range as High (Transport)
N	Neutral
L	Identifies the range as Low (Mow)
	Coolant Temperature-indicates the engine coolant temperature in either °C or °F
	Temperature (hot)
	PTO is engaged
	Denied or not allowed
	Engine Start
	Stop or shutdown
	Engine
	Key switch
	Indicates when the cutting units are being lowered
	Indicates when the cutting units are being raised
PIN	PIN passcode
CAN	CAN bus
	InfoCenter
Bad	Bad or failed

InfoCenter Icon Description (cont'd.)

	Bulb
	Output of TEC controller or control wire in harness
	Switch
	Operator must release switch
	Operator should change to indicated state
Symbols are often combined to form sentences. Some examples are shown below	
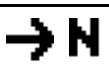	Operator should put machine in neutral
	Engine start denied
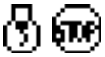	Engine shutdown
	Engine coolant too hot
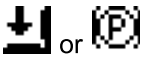	Sit down or set parking brake

Using the Menus

To access the InfoCenter menu system, press the menu access button while at the main screen. This will bring you to the main menu. Refer to the following tables for a synopsis of the options available from the menus:

Main Menu	
Menu Item	**Description**
Faults	The Faults menu contains a list of the recent machine faults. Refer to the Service Manual or your Authorized Toro Distributor for more information on the Faults menu and the information contained there.
Service	The Service menu contains information on the machine such as hours of use, counters, and other similar numbers.
Diagnostics	The Diagnostics menu displays the state of each machine switch, sensor, and control output. You can use this to troubleshoot certain issues as it will quickly tell you which machine controls are on and which are off.
Settings	The Settings menu allows you to customize and modify configuration variables on the InfoCenter display.
About	The About menu lists the model number, serial number, and software version of your machine.

Service	
Menu Item	**Description**
Hours	Lists the total number of hours that the machine, engine and PTO have been on, as well as the number of hours the machine has been transported and service due.
Counts	Lists numerous counts the machine has experienced.

Diagnostics	
Menu Item	**Description**
Cutting Units	Indicates the inputs, qualifiers, and outputs for raising and lowering the cutting units.
Hi/Low Range	Indicates the inputs, qualifiers, and outputs for driving in transport mode.
PTO	Indicates the inputs, qualifiers, and outputs for enabling the PTO circuit.
Engine Run	Indicates the inputs, qualifiers, and outputs for starting the engine.
Backlap	Indicates the inputs, qualifiers and outputs for operating the backlap function.

Settings	
Menu Item	**Description**
Units	Controls the units used on the InfoCenter. The menu choices are English or Metric.
Language	Controls the language used on the InfoCenter*.
LCD Backlight	Controls the brightness of the LCD display.
LCD Contrast	Controls the contrast of the LCD display.

Front Backlap Reel Speed	Controls the speed of the front reels in backlap mode.
Rear Backlap Reel Speed	Controls the speed of the rear reels in backlap mode.
Protected Menus	Allows the superintendant/mechanic to access protected menus by inputting a passcode.
Blade Count	Controls the number of blades on the reel for reel speed.
Mow Speed	Controls the ground speed for determining the reel speed.
Height of cut (HOC)	Controls the height of cut (HOC) for determining the reel speed.
F Reel RPM	Displays the calculated reel speed position for the front reels. The reels can also be manually adjusted.
R Reel RPM	Displays the calculated reel speed position for the rear reels. The reels can also be manually adjusted.

* Only "operator-faced" text is translated. Faults, Service, and Diagnostics screens are "service-faced". Titles will be in the selected language, but menu items are in English.

About	
Menu Item	**Description**
Model	Lists the model number of the machine.
SN	Lists the serial number of the machine.
Machine Controller Revision	Lists the software revision of the master controller.
InfoCenter Revision	Lists the software revision of the InfoCenter.
CAN Bus	Lists the machine communication bus status.

Protected Menu

There are 5 operating configuration settings that are adjustable within the Settings Menu of the InfoCenter: Blade Count, Mow Speed, Height of Cut (HOC), F Reel RPM, and R Reel RPM. These settings can be locked by using the Protected Menu.

Note: At the time of delivery, the initial password code is programmed by your distributor.

Accessing the Protected Menu Settings

To access the Protected Menu Settings

- From the Main Menu, scroll down to the Settings Menu and press the right button.
- In the Settings Menu, scroll down to the Protected Menu and press the right button.
- To enter the passcode, use the center button to set the first digit then press the right button to move on to the next digit.
- Use the center button to set the second digit then press the right button to move on to the next digit.
- Use the center button to set the third digit then press the right button to move on to the next digit.
- Use the center button to set the fourth digit then press the right button.
- Press the middle button to enter the code.
- If the code has been accepted and the protected menu has been “Unlocked”, “PIN” will be displayed in the upper right corner of the display screen.

The ability to view and change the settings in the Protected Menu can be changed. Once the Protected Menu has been accessed, scroll down to Protect Settings. Using the right button, changing Protect Settings to OFF will allow the ability to view and change the settings in the Protected Menu without entering the passcode. Changing Protect Settings to ON will hide the protected options and will require entering a passcode to change the setting in the Protected Menu. After the pass code has been set, the key switch must be turned off and back on to enable and save this feature.

Note: If the passcode has been forgotten or misplaced, please contact your distributor for assistance.

Setting the Blade Count

- In the Settings Menu, scroll down to Blade Count
- Press the right button to change the blade count between 5, 8, or 11 blade reels.

Setting the Mow Speed

- In the Settings Menu, scroll down to Mow Speed.
- Press the right button to select mow speed.
- Use the center and right button to select the appropriate mow speed set on the mechanical mow speed limiter on the traction pedal.
- Press the left button to exit mow speed and save the setting.

Setting the Height of Cut (HOC)

- In the Settings Menu, scroll down to HOC.
- Press the right button to select HOC.

- Use the center and right button to select the appropriate HOC setting. (If the exact setting is not displayed, select the nearest HOC setting from the list displayed).
- Press the left button to exit HOC and save the setting.

Setting the Front and Rear Reel Speeds

Although the front and rear reel speeds are calculated by inputting the number of blades, mow speed and HOC into the InfoCenter, the setting can be manually changed to accommodate for different mowing conditions.

- To change the Reel Speed Settings, scroll down to the F Reel RPM, R Reel RPM or both.
- Press the right button to change the reel speed value. As the speed setting is changed, the display will continue to show the calculated reel speed based on blade count, mow speed and HOC which was previously entered, but the new value will also be displayed.

Specifications

Note: Specifications and design are subject to change without notice.

Specification	ReelMaster® 5410	ReelMaster® 5510	ReelMaster® 5610
Transport Width	228 cm (90 inches)	233 cm (92 inches)	233 cm (92 inches)
Width of cut	254 cm (100 inches)	254 cm (100 inches)	254 cm (100 inches)
Length	282 cm (111 inches)	282 cm (111 inches)	282 cm (111 inches)
Height	160 cm (63 inches)	160 cm (63 inches)	160 cm (63 inches)
Weight	1,136 kg (2,505 lb)	1,222 kg (2,693 lb)	1,276 kg (2,813 lb)
Engine	Kubota 35.5 hp	Kubota 35.5 hp	Kubota 44.2 hp (turbo)
Fuel tank capacity	53 liters (14 US gallons)	53 liters (14 US gallons)	53 liters (14 US gallons)
Transport speed	0–16 km/h (0–10 mph)	0–16 km/h (0–10 mph)	0–16 km/h (0–10 mph)
Mowing speed	0–13 km/h (0–8 mph)	0–13 km/h (0–8 mph)	0–13 km/h (0–8 mph)

Attachments/Accessories

A selection of Toro approved attachments and accessories is available for use with the machine to enhance and expand its capabilities. Contact your Authorized Service Dealer or Distributor or go to www.Toro.com for a list of all approved attachments and accessories.

Operation

Note: Determine the left and right sides of the machine from the normal operating position.

⚠ CAUTION

If you leave the key in the ignition switch, someone could accidently start the engine and seriously injure you or other bystanders.

Lower the cutting units to the ground, set the parking brake and remove the key from the ignition switch before servicing or making adjustments to the machine.

Checking the Engine-Oil Level

The engine is shipped with oil in the crankcase; however, the oil level must be checked before and after the engine is first started.

Crankcase capacity: approximately 5.2 liters (5.5 US qt) with the filter

Use high-quality engine oil that meets the following specifications:

- API Classification Level Required: CH-4, CI-4 or higher
- Preferred oil: SAE 15W-40 (above 0 degrees F)
- Alternate oil: SAE 10W-30 or 5W-30 (all temperatures)

Toro Premium Engine oil is available from your distributor in either 15W-40 or 10W-30 viscosity.

1. Park the machine on a level surface, stop the engine, set the parking brake and remove the key from the ignition switch.
2. Open the hood.
3. Remove the dipstick, wipe it clean, and install it (Figure 27).

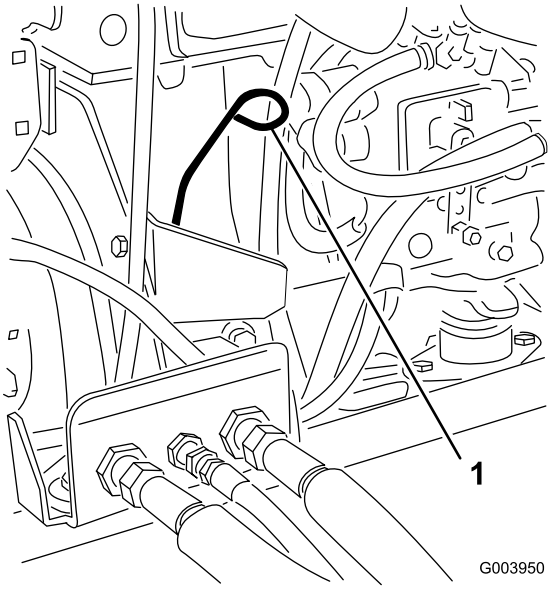

Figure 27

1. Dipstick

4. Remove dipstick and check oil level on dipstick.

   Note: The oil level should be up to the Full mark.
5. If the oil level is below the Full mark, remove the fill cap (Figure 28) and add oil until the level reaches the Full mark on the dipstick.

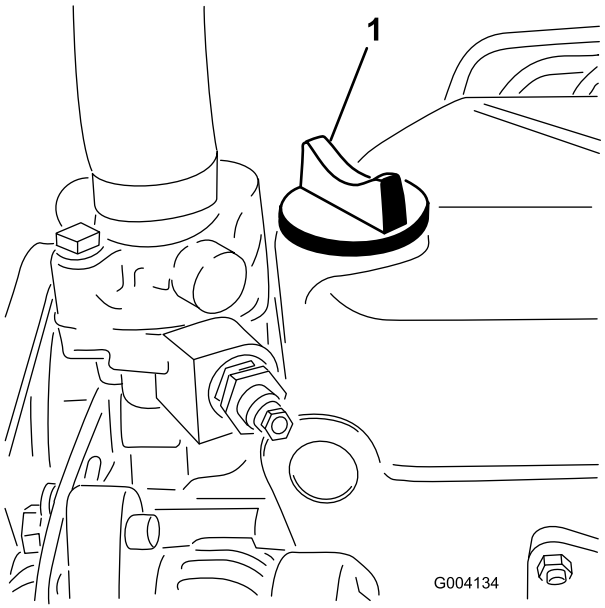

Figure 28

1. Oil-fill cap

Do not overfill the engine.

Important: Be sure to keep the engine-oil level between the upper and lower limits on the oil gauge. Engine failure may occur as a result of overfilling or underfilling the engine oil.

6. Install the oil-fill cap and close the hood.

Checking the Cooling System

Clean debris off of the screen, oil cooler, and front of the radiator daily and more often if conditions are extremely dusty and dirty. Refer to Removing Debris from the Cooling System (page 45).

The cooling system is filled with a 50/50 solution of water and permanent ethylene glycol antifreeze. Check the level of coolant in the expansion tank at the beginning of each day before starting the engine. The capacity of the cooling system for models 5410 and 5510 is 6.6 liters (7.0 US quarts) and model 5610 is 9.5 liters (10.0 US quarts).

⚠ CAUTION

If the engine has been running, the pressurized, hot coolant can escape and cause burns.

- **Do not open the radiator cap when the engine is running.**
- **Use a rag when opening the radiator cap, and open the cap slowly to allow steam to escape.**

1. Check the level of coolant in the expansion tank (Figure 29).

   The coolant level should be between the marks on the side of the tank.

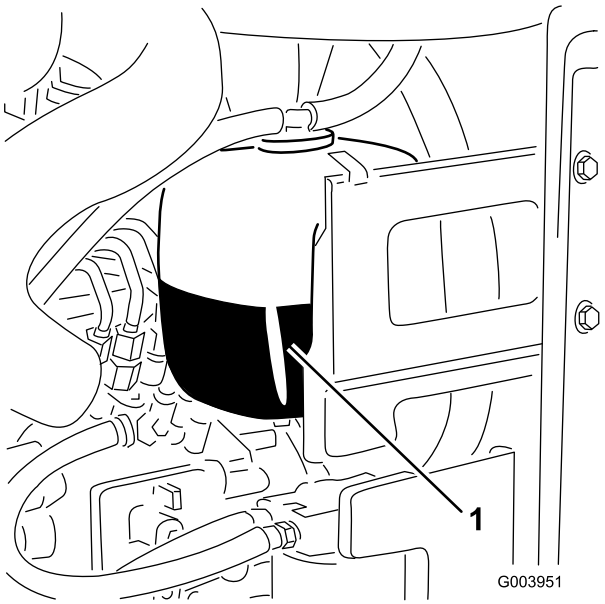

Figure 29

1. Expansion tank

2. If the coolant level is low, remove the expansion-tank cap and replenish the system. **Do not overfill the tank.**
3. Install the expansion-tank cap.

Adding Fuel

Use only clean, fresh diesel fuel or biodiesel fuels with low (<500 ppm) or ultra low (<15 ppm) sulfur content. The minimum cetane rating should be 40. Purchase fuel in quantities that can be used within 180 days to ensure fuel freshness.

Fuel tank capacity: 53 liters (14 US gallons)

Use summer-grade diesel fuel (No. 2-D) at temperatures above 20° F (-7° C) and winter-grade diesel fuel (No. 1-D or No. 1-D/2-D blend) below that temperature. Use of winter-grade fuel at lower temperatures provides lower flash point and cold flow characteristics which will ease starting and reduce fuel filter plugging.

Use of summer-grade fuel above 20° F (-7° C) will contribute toward longer fuel pump life and increased power compared to winter-grade fuel.

Important: Do not use kerosene or gasoline instead of diesel fuel. Failure to observe this caution will damage the engine.

⚠ WARNING

Fuel is harmful or fatal if swallowed. Long-term exposure to vapors can cause serious injury and illness.

- **Avoid prolonged breathing of vapors.**
- **Keep face away from nozzle and gas tank or conditioner opening.**
- **Keep fuel away from eyes and skin.**

Biodiesel Ready

This machine can also use a biodiesel blended fuel of up to B20 (20% biodiesel, 80% petrodiesel). The petrodiesel portion should be low or ultra-low sulfur. Observe the following precautions:

- The biodiesel portion of the fuel must meet specification ASTM D6751 or EN14214.
- The blended fuel composition should meet ASTM D975 or EN590.
- Painted surfaces may be damaged by biodiesel blends.
- Use B5 (biodiesel content of 5%) or lesser blends in cold weather.
- Monitor seals, hoses, and gaskets in contact with fuel as they may be degraded over time.
- Fuel filter plugging may be expected for a time after converting to biodiesel blended fuel.
- Contact your distributor if you wish for more information on biodiesel.

⚠ DANGER

In certain conditions, fuel is extremely flammable and highly explosive. A fire or explosion from fuel can burn you and others and can damage property.

- **Fill the fuel tank outdoors, in an open area, when the engine is cold. Wipe up any fuel that spills.**
- **Never fill the fuel tank inside an enclosed trailer.**
- **Never smoke when handling fuel, and stay away from an open flame or where fuel fumes may be ignited by a spark.**
- **Store fuel in an approved container and keep it out of the reach of children. Do not buy more than a 30-day supply of fuel.**
- **Do not operate without entire exhaust system in place and in proper working condition.**

⚠ DANGER

In certain conditions during fueling, static electricity can be released causing a spark which can ignite the fuel vapors. A fire or explosion from fuel can burn you and others and can damage property.

- **Always place fuel containers on the ground away from your vehicle before filling.**
- **Do not fill fuel containers inside a vehicle or on a truck or trailer bed because interior carpets or plastic truck bed liners may insulate the container and slow the loss of any static charge.**
- **When practical, remove equipment from the truck or trailer and refuel the equipment with its wheels on the ground.**
- **If this is not possible, then refuel such equipment on a truck or trailer from a portable container, rather than from a fuel dispenser nozzle.**
- **If a fuel dispenser nozzle must be used, keep the nozzle in contact with the rim of the fuel tank or container opening at all times until fueling is complete.**

1. Park the machine on a level surface.
2. Using a clean rag, clean the area around the fuel-tank cap.
3. Remove the cap from the fuel tank (Figure 30).

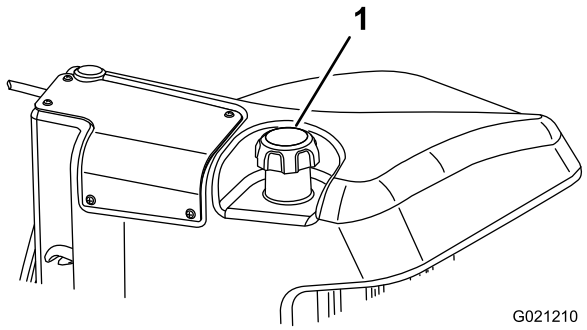

Figure 30

1. Fuel-tank cap

4. Fill the tank until the level is to the bottom of the filler neck with diesel fuel.
5. Install the fuel-tank cap tightly after filling the tank.

   Note: If possible, fill the fuel tank after each use. This will minimize possible buildup of condensation inside the fuel tank.

Checking the Hydraulic Fluid

The reservoir is filled at the factory with approximately 56.7 liters (15 US gallons) of high-quality hydraulic fluid. The best time to check the hydraulic oil is when the fluid is cold. The machine should be in its transport configuration. If the oil level is below the 'add' mark on the dipstick, add oil to bring the oil level to the middle of the acceptable range. **Do not overfill the reservoir.** If the oil level is between the 'full' and the 'add' marks, no oil addition is required.

The recommended replacement fluid is:

Toro Premium All Season Hydraulic Fluid

(available in 19 liter (5 gallon) containers or 208 liter (55 gallon) drums—see the parts documentation or your Toro distributor for part numbers)

Alternative fluids: If the Toro fluid is not available, other conventional, petroleum-based fluids may be used, provided that they meet all of the following material properties and industry specifications. Check with your oil supplier to see whether the oil meets these specifications.

Note: Toro will not assume responsibility for damage caused by improper substitutions, so use only products from reputable manufacturers who will stand behind their recommendation.

High Viscosity Index/Low Pour Point Antiwear Hydraulic Fluid, ISO VG 46 Multigrade

Material Properties:

Viscosity, ASTM D445	cSt @ 40°C (104°F) 44 to 48 cSt @ 100°C (212°F) 7.9 to 9.1
Viscosity index, ASTM D2270	140 or higher (high viscosity index indicates a multiweight fluid)

Pour point, ASTM D97	-36.7°C to -45°C (-34°F to -49°F)
FZG, fail stage	11 or better
Water content (new fluid)	500 ppm (maximum)

Industry Specifications:

Vickers I-286-S, Vickers M-2950-S, Denison HF-0, Vickers 35 VQ 25 (Eaton ATS373-C)

The proper hydraulic fluids must be specified for mobile machinery (as opposed to industrial plant usage), multiweight-type, with ZnDTP or ZDDP anti-wear additive package (not an ashless-type fluid).

Important: Many hydraulic fluids are almost colorless, making it difficult to spot leaks. A red dye additive for the hydraulic system oil is available in 20 ml (2/3 fl oz) bottles. One bottle is sufficient for 15 to 22 liters (4 to 6 US gallons) of hydraulic oil. Order part 44-2500 from your Authorized Toro Distributor.

Synthetic, Biodegradable Hydraulic Fluid

(available in 19 liter (5 gallon) containers or 208 liter (55 gallon) drums—see the parts documentation or your Toro distributor for part numbers)

This high-quality, synthetic, biodegradable fluid has been tested and found compatible for this Toro model. Other brands of synthetic fluid may have seal compatibility problems and Toro cannot assume responsibility for unauthorized substitutions.

Note: This synthetic fluid is not compatible with the Toro Biodegradable Fluid previously sold. See your Toro Distributor for more information.

Alternative fluids:

- Mobil EAL Envirosyn H 46 (US)
- Mobil EAL Hydraulic Oil 46 (international)

1. Position machine on a level surface, lower the cutting decks and stop the engine.
2. Clean area around filler neck and cap of hydraulic tank (Figure 31).

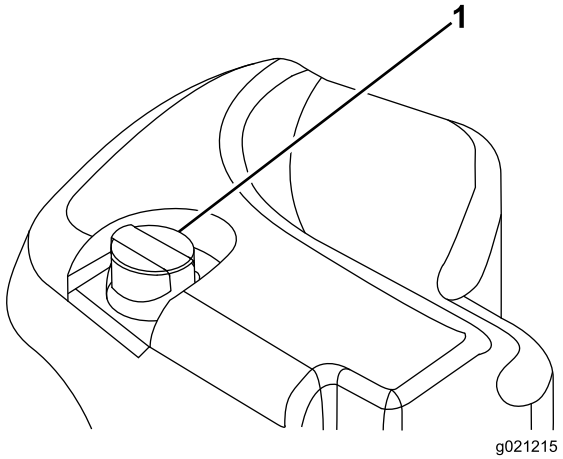

Figure 31

1. Hydraulic-tank cap

3. Remove cap/dipstick from filler neck and wipe it with a clean rag. Insert dipstick into filler neck; then remove it and check level of fluid. Fluid level should be within operating range on dipstick. Do not overfill the tank.
4. If the level is low, add the appropriate fluid to raise the level to the full mark.
5. Install cap/dipstick onto filler neck.

Checking the Reel to Bedknife Contact

Each day before operating, check the reel-to-bedknife contact, regardless of whether the quality of cut had previously been acceptable. There must be light contact across the full length of the reel and the bedknife (refer to Adjusting the Reel to Bedknife in the cutting unit *Operator's Manual*).

Checking the Torque of the Wheel Nuts

Torque the wheel nuts to 94 to 122 N-m (70 to 90 ft-lb) after **1 to 4 hours** of operation and again after **10 hours** of operation. Torque the wheel nuts every **250 hours** thereafter.

⚠ WARNING

Failure to maintain proper torque of the wheel nuts could result in personal injury.

Breaking-in the Machine

To ensure optimum performance of the parking brake system, burnish (break-in) the brakes before use. Set the forward traction speed to 6.4 km/h (4 mph) to match the reverse traction speed. (All 8 spacers moved to the top of the mow speed control.) With the engine at high idle, proceed forward with the mow speed control stop engaged and ride the brake for 15 seconds. Proceed backwards at full reverse speed and ride the brake for 15 seconds. Repeat this 5 times waiting 1 minute between each forward and reverse cycle to avoid overheating the brakes. An adjustment to the brakes may be required after break-in; refer to Adjusting the Parking Brakes (page 46).

Bleeding the Fuel System

You must bleed the fuel system before starting the engine if any of the following situations have occurred:

- Initial startup of a new machine
- The engine has ceased running due to lack of fuel.
- Maintenance has been performed upon fuel system components; i.e., filter replaced, separator serviced, etc.

⚠ DANGER

Under certain conditions, diesel fuel and fuel vapors are highly flammable and explosive. A fire or explosion from fuel can burn you and others and can cause property damage.

- **Use a funnel and fill the fuel tank outdoors, in an open area, when the engine is off and is cold. Wipe up any fuel that spills.**
- **Do not fill the fuel tank completely full. Add fuel to the fuel tank until the level is 6 to 13 mm (1/4 to 1/2 inch) below the bottom of the filler neck. This empty space in the tank allows the fuel to expand.**
- **Never smoke when handling fuel, and stay away from an open flame or where fuel fumes may be ignited by a spark.**
- **Store fuel in a clean, safety-approved container and keep the cap in place.**

1. Park the machine on a level surface and ensure that the fuel tank is at least half full.
2. Open the hood.
3. Open the air-bleed screw on the fuel-injection pump (Figure 32) with a 12 mm wrench.

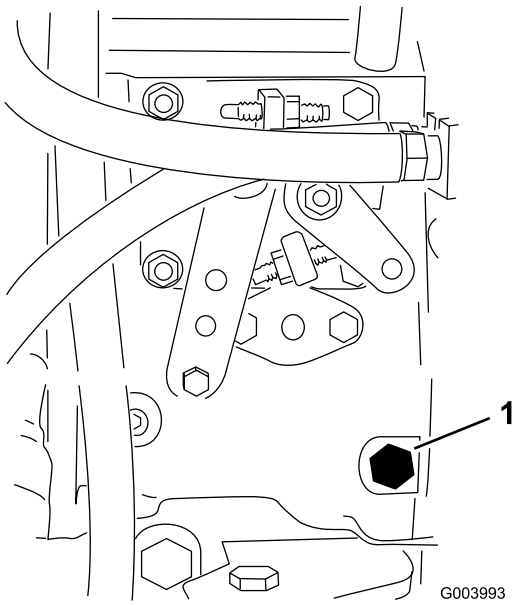

Figure 32

1. Bleed screw

4. Turn the key in the ignition switch to the On position. The electric fuel pump will begin operation, thereby forcing air out around the air-bleed screw. Leave the key in the On position until a solid stream of fuel flows out around the screw.
5. Tighten the screw and turn the key to the Off position.

Note: Normally, the engine should start after the above bleeding procedures are followed. However, if engine does not start, air may be trapped between injection pump and injectors; refer to Bleeding Air from the Fuel Injectors (page 42).

Starting and Stopping the Engine

Important: You must bleed the fuel system before starting the engine if you are starting the engine for the first time, the engine has stopped due to lack of fuel, or you have performed maintenance on the fuel system; refer to Bleeding the Fuel System (page 29).

Starting the Engine

1. Sit on the seat, keep your foot off of the traction pedal so that it is in Neutral, engage the parking brake, set the throttle to the Fast position, and ensure that the Enable/Disable switch is in the Disable position.
2. Turn the ignition switch to the On/Preheat position.

   An automatic timer will control the glow plug preheat for 6 seconds.
3. After preheating the glow plugs, turn key to the Start position.

   Crank the engine for no longer than 15 seconds. Release the key when the engine starts. If additional preheating is required, turn key to the Off position and then to the On/Preheat position. Repeat this process as required.
4. Run the engine at low idle speed until it warms up.

Stopping the Engine

1. Move all controls to Neutral, set the parking brake, move the throttle to the low idle position and allow the engine to reach low idle speed.

   Important: Allow the engine to idle for 5 minutes before shutting it off after a full load operation. Failure to do so may lead to trouble on a turbo-charged engine.
2. Turn the key to the Off position and remove it from the switch.

Setting the Reel Speed

To achieve a consistent, high quality of cut and a uniform after cut appearance, it is important that you set the reel speed to the proper setting. Adjust the reel speed as follows:

1. In the InfoCenter, under the settings menu, enter the blade count, mow speed and HOC to calculate the proper reel speed.

2. If further adjustments are required, in the settings menu, scroll down to the F Reel RPM, R Reel RPM or both.
3. Press the right button to change the reel speed value. As the speed setting is changed, the display will continue to show the calculated reel speed based on blade count, mow speed and HOC, but the new value will also be displayed.

   Note: The reel speed may need to be increased or decreased to compensate for varying turf conditions.

Adjusting the Lift Arm Counterbalance

You can adjust the counterbalance on the rear cutting unit lift arms to compensate for different turf conditions and to maintain a uniform height of cut in the rough conditions or in areas of thatch buildup.

You can adjust each counterbalance spring to one of four settings. Each increment increases or decreases counterbalance on the cutting unit by 2.3 kg (5 lb). The springs can be positioned on the back side of the first spring actuator to remove all counterbalance (fourth position).

1. Position the machine on a level surface, lower the cutting units, stop the engine, engage the parking brakes, and remove the key from ignition switch.
2. Insert a tube or similar object onto the long spring end and pivot it around the spring actuator to the desired position (Figure 33).

⚠ CAUTION

The springs are under tension and could cause personal injury.

Use caution when adjusting them.

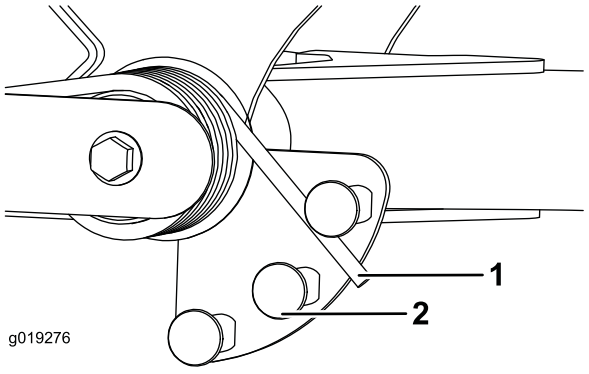

Figure 33

1. Spring
2. Spring actuator

3. Repeat the procedure on the other spring.

Adjusting the Lift Arm Turn Around Position

1. Position the machine on a level surface, lower the cutting units, stop the engine, engage the parking brakes, and remove the key from ignition switch.
2. The lift arm switch is located underneath the hydraulic tank behind the front right lift arm (Figure 34).
3. Loosen the switch mounting screws (Figure 34) and move the switch down to increase the lift arm turn around height or move the switch up to decrease the lift arm turn around height. Tighten the mounting screws.

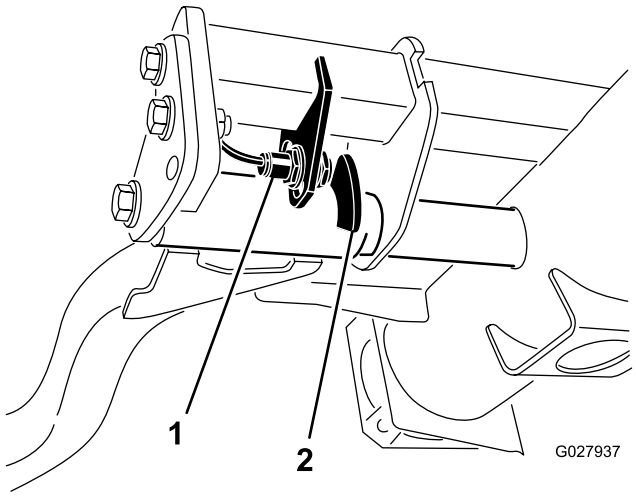

Figure 34

1. Switch
2. Lift arm sensing device

Locating the Jacking Points

Note: Use jack stands to support the machine when required.

- Front—rectangular pad, under the axle tube, inside each front tire (Figure 35).

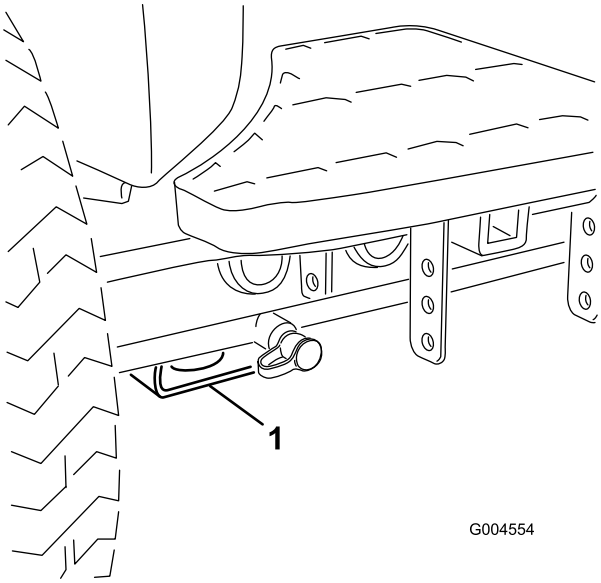

Figure 35

1. Front jacking point

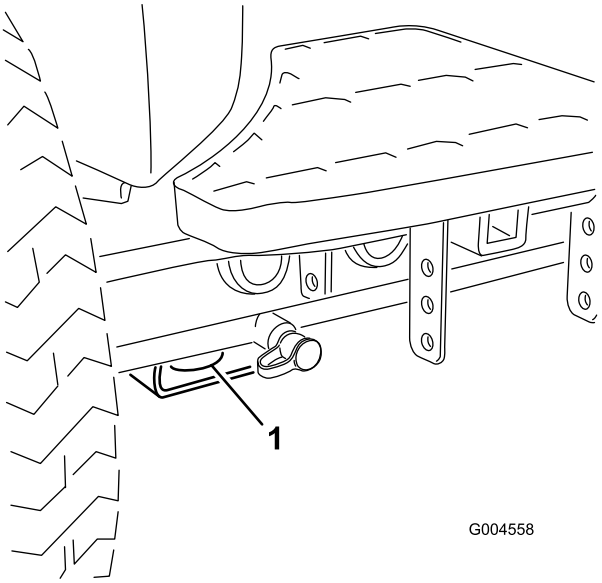

Figure 36

1. Front tie-down

- Rear—rectangular axle tube on the rear axle

Transporting the Machine

Use a heavy-duty trailer or truck to transport the machine. Ensure that the trailer or truck has all necessary brakes, lighting, and marking as required by law. Please carefully read all the safety instructions. Knowing this information could help you, your family, pets, or bystanders avoid injury.

⚠ WARNING

Driving on the street or roadway without turn signals, lights, reflective markings, or a slow-moving vehicle emblem is dangerous and can lead to accidents causing personal injury.

Do not drive the machine on a public street or roadway.

To transport the machine:

1. If using a trailer, connect it to the towing vehicle and connect the safety chains.
2. If applicable, connect the trailer brakes.
3. Load the machine onto the trailer or truck.
4. Stop the engine, remove the key, set the brake, and close the fuel valve.
5. Use the metal tie-downs on the machine to securely fasten the machine to the trailer or truck with straps, chains, cable, or ropes (Figure 36 and Figure 37).
   - Front—the hole in the rectangular pad, under the axle tube, inside each front tire (Figure 36)
   - Rear—each side of the machine on the rear frame (Figure 37)

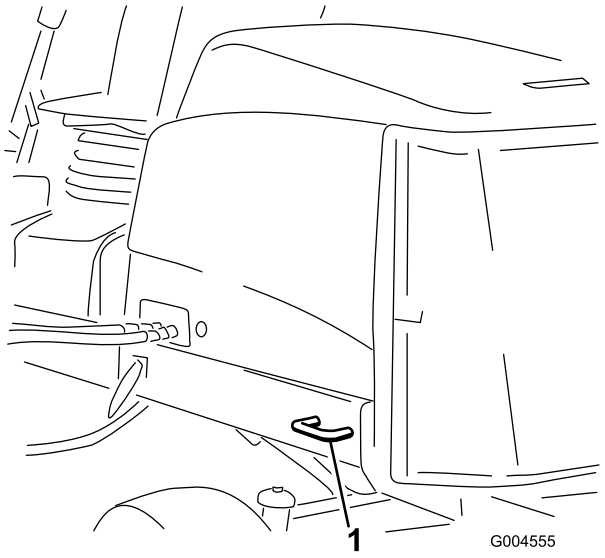

Figure 37

1. Rear tie-down

Loading the Machine

Use extreme caution when loading the machine onto a trailer or a truck. One full-width ramp that is wide enough to extend beyond the front tires of the machine is recommended instead of individual ramps for each tire (Figure 38). If it is not possible to use one full-width ramp, use enough individual ramps to simulate a full-width continuous ramp.

The ramp should be long enough so that the angles do not exceed 15 degrees (Figure 38). A steeper angle may cause mower components to get caught as the unit moves from the ramp to the trailer or truck. Steeper angles may also cause the

machine to tip backward. If loading the machine on or near a slope, position the trailer or truck so that it is on the down side of the slope and the ramp extends up the slope. This will minimize the ramp angle. The trailer or truck should be as level as possible.

Important: Do not attempt to turn the machine while on the ramp; you may lose control and drive off the side.

⚠ WARNING

Loading a machine onto a trailer or truck increases the possibility of tipping over and could cause serious injury or death.

- **Use extreme caution when operating a machine on a ramp.**
- **Use the ROPS (in up position) while using the seat belt when loading the machine. Ensure that the ROPS clears the top of an enclosed trailer.**
- **Use only a single, full-width ramp.**
- **If individual ramps must be used, use enough ramps to create an unbroken ramp surface wider than the machine.**
- **Do not exceed a 15-degree angle between the ramp and the ground or between the ramp and the trailer or truck.**
- **Avoid sudden acceleration or deceleration while driving the machine up or down a ramp.**

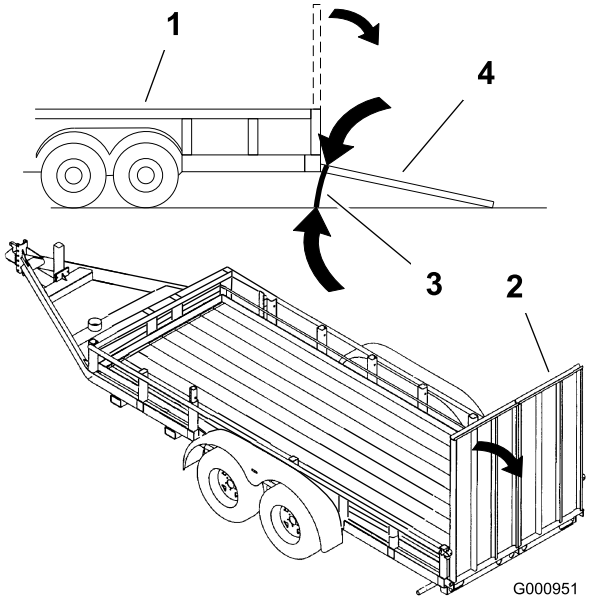

Figure 38

1. Trailer
2. Full-width ramp
3. Not greater than 15 degrees
4. Full-width ramp—side view

Pushing or Towing the Machine

In an emergency, the machine can be moved by opening the bypass valve in the variable displacement hydraulic pump and pushing or towing the machine.

Important: Do not push or tow the machine faster than 3 to 4.8 km/h (2 to 3 mph) because internal transmission damage may occur. The bypass valve must be open whenever the machine is pushed or towed.

1. The bypass valve is located on the left side of the hydrostat (Figure 39). Rotate the bolt 1-1/2 turns to open and allow oil to bypass internally.

   Note: Because fluid is bypassed, the machine can be moved slowly without damaging the transmission.

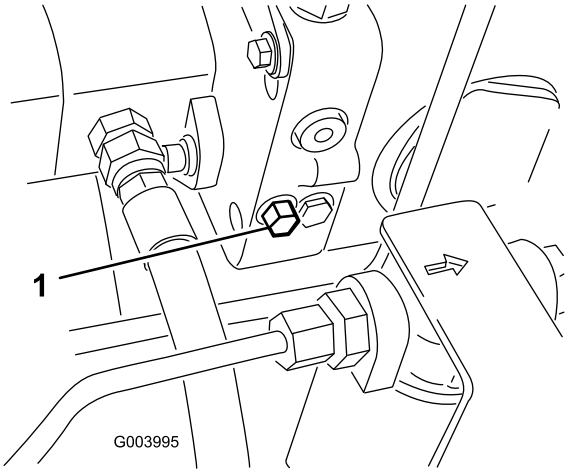

Figure 39

1. Bypass valve

2. Close the bypass valve before starting the engine. However, do not exceed 7 to 11 N-m. (5 to 8 ft-lb) torque to close the valve.

   Important: Running the engine with the bypass valve open will cause the transmission to overheat.

Understanding the Diagnostic Light

The machine is equipped with a diagnostic light which indicates if the electronic controller senses an electronic malfunction. The diagnostic light is located on the control arm (Figure 40). When the machine is functioning properly and the key switch is moved to the On/Run position, the diagnostic light will turn on briefly to indicate the light is working properly. When a machine advisory message is displayed, the light will illuminate when the message is present. When a fault message is displayed, the light will blink until the fault is resolved.

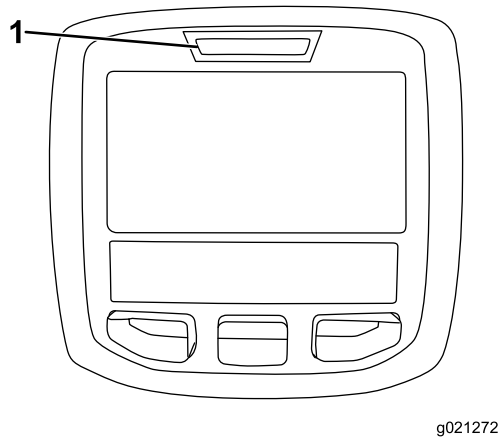

Figure 40

1. Diagnostic light

Checking the Interlock Switches

The purpose of the interlock switches is to prevent the engine from cranking or starting unless the traction pedal is in the Neutral position, the Enable/Disable switch is in the Disable position, and the Lower Mow/Raise control is in the Neutral position. In addition, the engine should stop when the traction pedal is pressed with operator off of the seat or if the parking brake is left engaged.

⚠ CAUTION

If safety interlock switches are disconnected or damaged the machine could operate unexpectedly causing personal injury.

- **Do not tamper with the interlock switches.**
- **Check the operation of the interlock switches daily and replace any damaged switches before operating the machine.**

Verifying the Interlock Switch Function

1. Park the machine on a level surface, lower the cutting units, stop the engine, and engage the parking brake.
2. Turn the key switch to the On position, but do not start the machine.
3. Locate the appropriate switch function in the diagnostics menu on the InfoCenter.
4. Individually, change each of the switches from open to closed (i.e., sit on seat, engage traction pedal, etc.), and note that the appropriate state of the switch changes. Repeat this for all switches that you can change by hand.
5. If a switch is closed and the appropriate indicator does not change, check all wiring and connections to the switch and/or check the switches with an ohm meter. Replace any malfunctioning switches and repair any damaged or worn wiring.

Note: The InfoCenter display also has the ability to detect which output solenoids or relays are turned on. This is a quick way to determine if a machine malfunction is electrical or hydraulic.

Verifying Output Function

1. Park the machine on a level surface, lower the cutting units, stop the engine, and engage the parking brake.
2. Turn the key switch to the On position and start the machine.
3. Locate the appropriate output function in the diagnostics menu on the InfoCenter.
4. Sit on the seat and attempt to operate the desired function of the machine. The appropriate outputs should change state to indicate that the ECM is turning on that function.

Note: If the correct outputs do not illuminate, verify that the required input switches are in the necessary positions to allow that function to occur. Verify the correct switch function.

If the output displays are on as specified, but the machine does not function properly, this indicates a non-electrical problem. Make repairs as necessary.

Hydraulic Valve Solenoid Functions

Use the list below to identify and understand the different functions of the solenoids in the hydraulic manifold. Each solenoid must be energized to allow the function to occur.

Solenoid	Function
MSV2	Front reel circuit
MSV1	Rear reel circuit
SVRV	Lift/lower cutting units
SV1	Lift/lower front cutting unit
SV3	Lift/lower rear cutting unit
SV2	Raise any cutting units

Operating Tips

Becoming Familiar with the Machine

Before mowing grass, practice operating the machine in an open area. Start and stop the engine. Operate in forward and reverse. Lower and raise the cutting units and engage and disengage the reels. When you feel familiar with the machine, practice operating up and down slopes at different speeds.

Understanding the Warning System

If a warning light comes on during operation, stop the machine immediately and correct the problem before continuing operation. Serious damage could occur if you operate the machine with a malfunction.

Mowing Grass

Start the engine and move the throttle to the Fast position. Move the Enable/Disable switch to the Enable position and use the Lower Mow/Raise lever to control the cutting units (the front cutting units are timed to lower before the rear cutting units). To move forward and cut grass, press the traction pedal forward.

Note: Allow the engine to idle for 5 minutes before shutting it off after a full load operation. Failure to do so may lead to turbo-charger trouble.

Driving the Machine in Transport Mode

Move the Enable/Disable switch to the Disable position and raise the cutting units to the transport position. Move the Mow/Transport lever to the transport position. Be careful when driving between objects so you do not accidentally damage the machine or cutting units. Use extra care when operating the machine on slopes. Drive slowly and avoid sharp turns on slopes to prevent roll overs. Lower the cutting units when going downhill for steering control.

Maintenance

Note: Determine the left and right sides of the machine from the normal operating position.

Recommended Maintenance Schedule(s)

Maintenance Service Interval	Maintenance Procedure
After the first hour	• Torque the wheel lug nuts to 94 to 122 N-m (70 to 90 ft-lb).
After the first 8 hours	• Check the condition and tension of the alternator belt.
After the first 10 hours	• Torque the wheel lug nuts to 94 to 122 N-m (70 to 90 ft-lb).
After the first 50 hours	• Change the engine oil and filter. • Check the engine speed (idle and full throttle).
Before each use or daily	• Check the engine-oil level. • Check the cooling system. • Check the hydraulic-fluid level. • Check the reel to bedknife contact. • Check the operation of the interlock switches. • Remove debris from the screen, oil coolers, and radiator (more frequently in dirty operating conditions). • Check the hydraulic lines and hoses for leaks, kinked lines, loose mounting supports, wear, loose fittings, weather deterioration, and chemical deterioration.
Every 50 hours	• Grease the bearings and bushings (grease them immediately after every washing regardless of the interval listed). • Check the condition of and clean the battery. • Check the battery cable connections.
Every 100 hours	• Inspect the cooling system hoses. • Check the condition and tension of the alternator belt.
Every 150 hours	• Change the engine oil and filter.
Every 200 hours	• Drain moisture from the fuel tank and hydraulic-fluid tank. • Check the reel bearing preload.
Every 250 hours	• Torque the wheel lug nuts to 94 to 122 N-m (70 to 90 ft-lb).
Every 400 hours	• Service the air cleaner. (Service the air cleaner earlier if the air cleaner indicator shows red. Service it more frequently in extremely dirty or dusty conditions.) • Check the fuel lines and connections for deterioration, damage, or loose connections. • Replace the fuel filter canister. • Check the engine speed (idle and full throttle).
Every 800 hours	• Drain and clean the fuel tank • Check the rear wheel toe-in. • Change the hydraulic fluid. • Change the hydraulic filters (sooner if the service interval indicator is in the red zone). • Pack the rear wheel bearings • Adjust the engine valves (refer to the engine operator's manual).
Before storage	• Drain and clean the fuel tank
Every 2 years	• Flush and replace the cooling system fluid. • Drain and flush the hydraulic tank. • Replace all moving hoses.

Daily Maintenance Checklist

Duplicate this page for routine use.

Maintenance Check Item	For the week of: Mon.	Tues.	Wed.	Thurs.	Fri.	Sat.	Sun.
Check the safety interlock operation.							
Check the brake operation.							
Check the engine oil and fuel level.							
Drain the water/fuel separator.							
Check the air filter restriction indicator.							
Check the radiator and screen for debris.							
Check unusual engine noises.[1]							
Check unusual operating noises.							
Check the hydraulic system oil level.							
Check the hydraulic filter indicator. [2]							
Check hydraulic hoses for damage.							
Check for fluid leaks.							
Check the tire pressure.							
Check the instrument operation.							
Check the reel-to-bedknife adjustment.							
Check the height-of-cut adjustment.							
Check all grease fittings for lubrication.[3]							
Touch-up damaged paint.							

1. Check the glow plug and injector nozzles if hard starting, excess smoke, or rough running is noted.

2. Check with the engine running and the oil at operating temperature

3. Immediately after every washing, regardless of the interval listed

Notation for Areas of Concern

Inspection performed by:		
Item	**Date**	**Information**
1		
2		
3		
4		
5		
6		
7		
8		

Important: **Refer to your engine operator's manual for additional maintenance procedures.**

Note: To obtain an electrical schematic or a hydraulic schematic for your machine, visit www.Toro.com.

Service Interval Chart

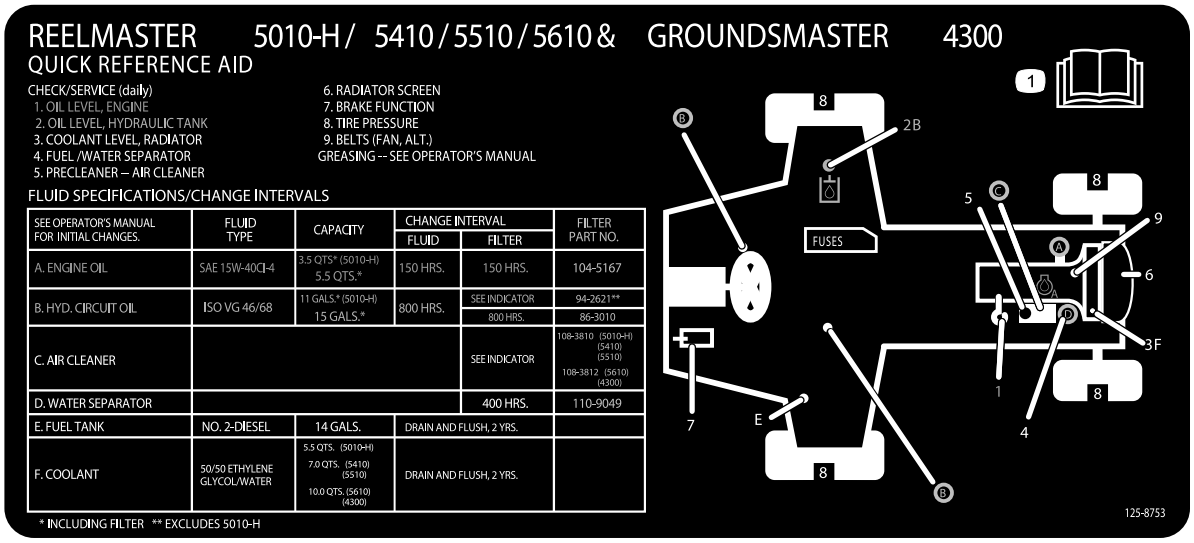

Figure 41

⚠ CAUTION

If you leave the key in the ignition switch, someone could accidently start the engine and seriously injure you or other bystanders.

Remove the key from the ignition before you do any maintenance.

Lubrication

Greasing the Bearings and Bushings

If you operate the machine under normal conditions, lubricate all grease fittings for the bearings and bushings after **every 50 hours of operation** with #2 general-purpose, lithium-based grease. Lubricate the bearings and bushings **immediately** after every washing, regardless of the interval listed.

The grease fitting locations and quantities are as follows:

- Pump drive shaft U-joint (3) (Figure 42)

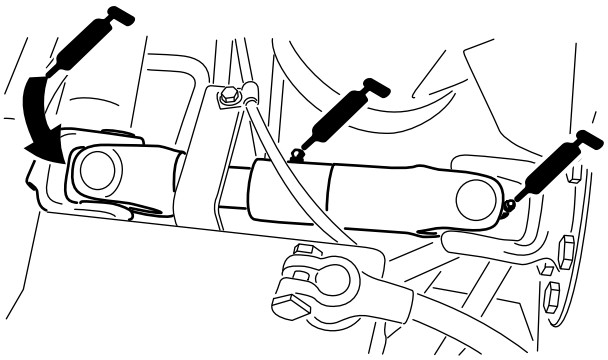

Figure 42

- Cutting unit lift arm cylinders (2 each) (Figure 43)

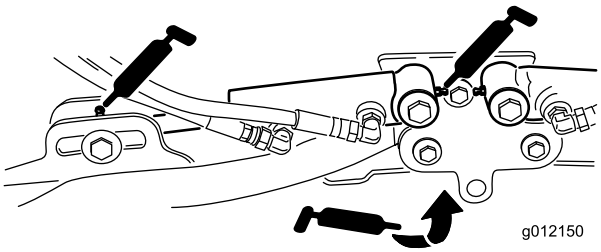

Figure 43

- Lift arm pivots (1 each) (Figure 43)
- Cutting unit carrier frame and pivot (2 each) (Figure 44)

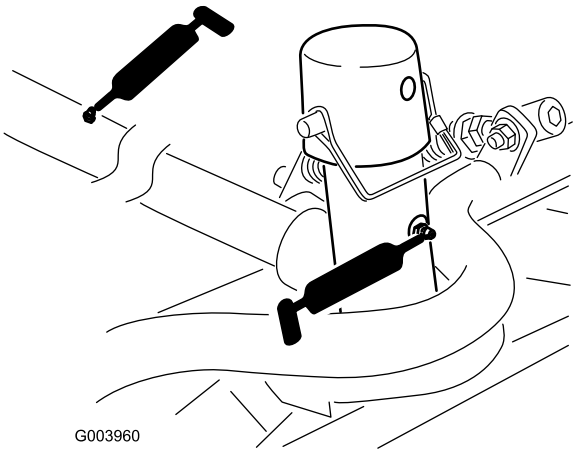

Figure 44

- Lift arm pivot shaft (1 each) (Figure 45)

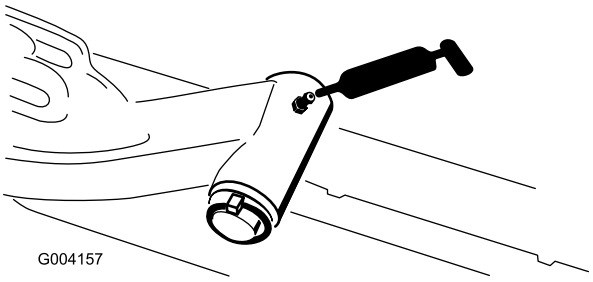

Figure 45

- Rear axle tie rod (2) (Figure 46)

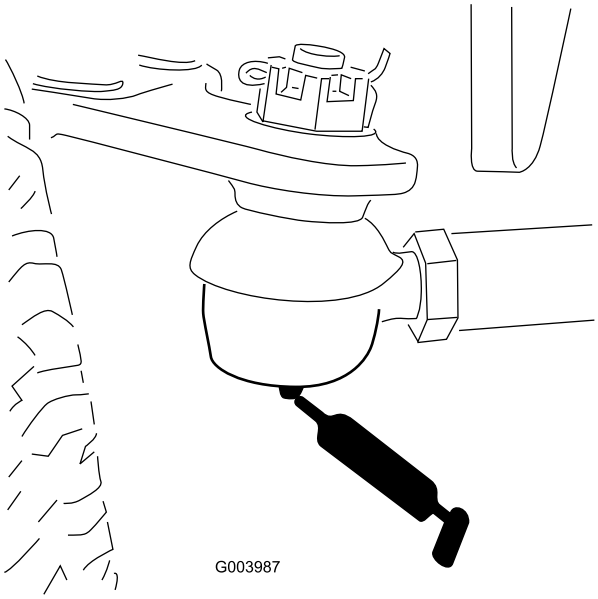

Figure 46

- Axle steering pivot (1) (Figure 47)

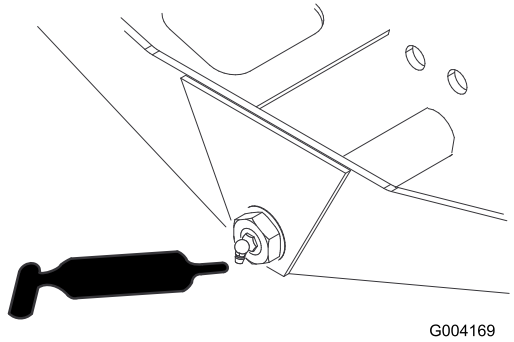

Figure 47

- Steering cylinder ball joints (2) (Figure 48)

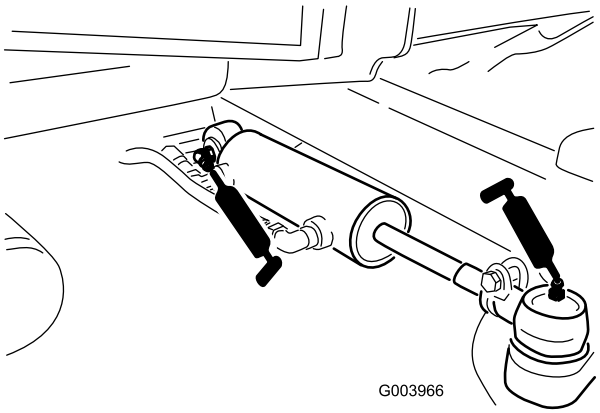

Figure 48

- Brake pedal (1) (Figure 49)

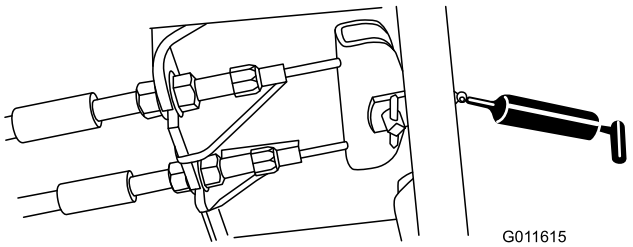

Figure 49

Engine Maintenance

Servicing the Air Cleaner

Check the air cleaner body for damage which could cause an air leak. Replace if damaged. Check the whole intake system for leaks, damage or loose hose clamps.

Service the air cleaner filter only when the service indicator (Figure 50) requires it. Changing the air filter before it is necessary only increases the chance of dirt entering the engine when the filter is removed.

Important: Be sure the cover is seated correctly and seals with the air cleaner body.

1. Release the latches securing the air cleaner cover to the air cleaner body (Figure 50).

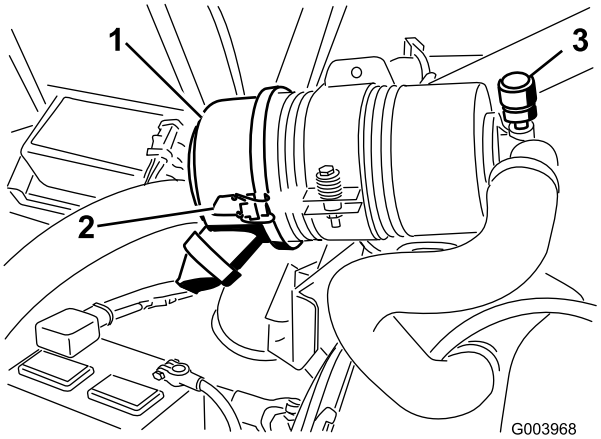

Figure 50

1. Air cleaner cover
2. Air cleaner cover latch
3. Air cleaner service indicator

2. Remove the cover from the air cleaner body. Before removing the filter, use low pressure air (40 psi, clean and dry) to help remove large accumulations of debris packed between outside of the filter and the canister. **Avoid using high pressure air which could force dirt through the filter into the intake tract.**

   This cleaning process prevents debris from migrating into the intake when the filter is removed.

3. Remove and replace the filter (Figure 51).

   Cleaning of the used element is not recommended due to the possibility of damage to the filter media. Inspect the new filter for shipping damage, checking the sealing end of the filter and the body. **Do not use a damaged element.** Insert the new filter by applying pressure to the outer rim of the element to seat it in the canister. **Do not apply pressure to the flexible center of the filter.**

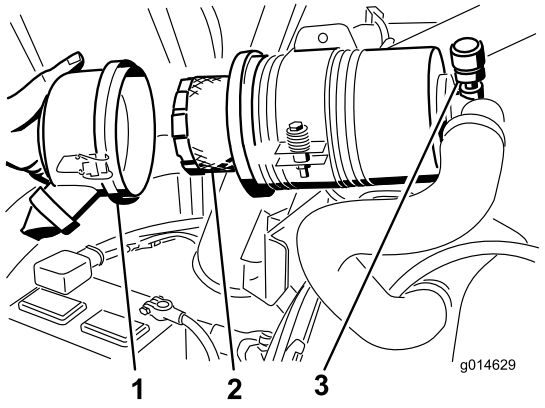

Figure 51

1. Air cleaner cover
2. Air cleaner filter
3. Air cleaner indicator

4. Clean the dirt ejection port located in the removable cover. Remove the rubber outlet valve from the cover, clean the cavity and replace the outlet valve.
5. Install the cover orienting the rubber outlet valve in a downward position—between approximately 5:00 to 7:00 when viewed from the end.
6. Secure the latches.

Servicing the Engine Oil and Filter

Change the engine oil and filter initially after the first 50 hours of operation and every 150 hours thereafter.

1. Remove the drain plug (Figure 52) and let the oil flow into a drain pan.

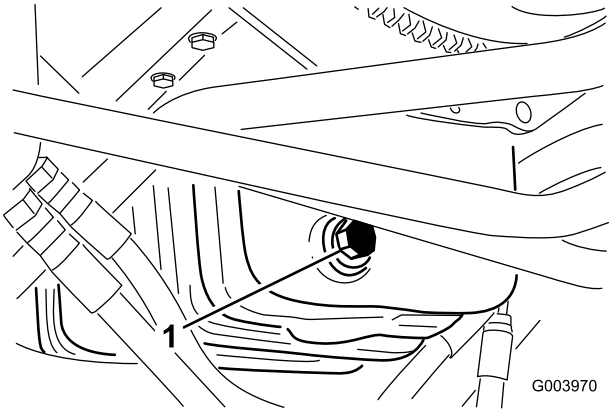

Figure 52

1. Oil drain plug

2. When the oil stops, install the drain plug.
3. Remove the oil filter (Figure 53).

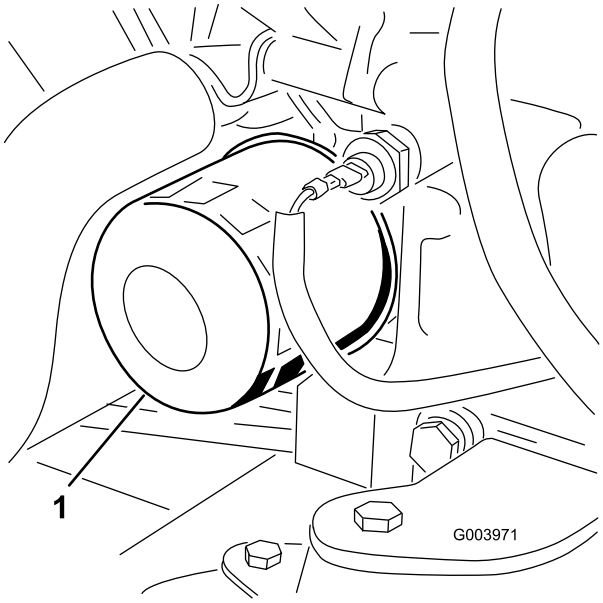

Figure 53

1. Oil filter

4. Apply a light coat of clean oil to the new filter seal.
5. Install the replacement oil filter to the filter adapter. Turn the oil filter clockwise until the rubber gasket contacts the filter adapter, then tighten the filter an additional 1/2 turn.

   Important: Do not over-tighten the filter.
6. Add oil to the crankcase; refer to Checking the Engine-Oil Level (page 26).

Adjusting the Throttle

1. Position the throttle lever forward so that it is approximately 3 mm (1/8 inch) from the front of the control arm slot.
2. Loosen the throttle cable connector, on the throttle cable, next to the injection pump lever (Figure 54).

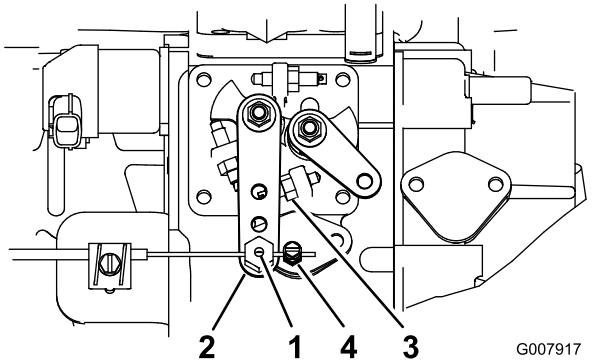

Figure 54

1. Throttle cable pivot
2. Injection pump lever arm
3. High idle stop
4. Throttle cable connector

3. Hold the injection pump lever arm against the high idle stop (Figure 54).
4. While pulling the throttle cable, to remove any slack, tighten the throttle cable connector.

   Note: When tightened, the cable pivot must be free to swivel on the injection pump lever arm.
5. If the throttle does not stay in position during operation, increase the torque on the locknut, used to set the friction device on the throttle lever.

Fuel System Maintenance

⚠ DANGER

Under certain conditions, diesel fuel and fuel vapors are highly flammable and explosive. A fire or explosion from fuel can burn you and others and can cause property damage.

- **Use a funnel and fill the fuel tank outdoors, in an open area, when the engine is off and is cold. Wipe up any fuel that spills.**
- **Do not fill the fuel tank completely full. Add fuel to the fuel tank until the level is 6 to 13 mm (1/4 to 1/2 in.) below the bottom of the filler neck. This empty space in the tank allows the fuel to expand.**
- **Never smoke when handling fuel, and stay away from an open flame or where fuel fumes may be ignited by a spark.**
- **Store fuel in a clean, safety-approved container and keep the cap in place.**

Draining the Fuel Tank

Service Interval: Every 800 hours

Before storage

Drain and clean the fuel tank if the fuel system becomes contaminated or if the machine is to be stored for an extended period. Use clean fuel to flush out the tank.

Checking the Fuel Lines and Connections

Check the fuel lines and connections every 400 hours or yearly, whichever comes first. Inspect them for deterioration, damage, or loose connections.

Servicing the Water Separator

Service Interval: Every 400 hours

Drain water or other contaminants from water separator (Figure 55) daily. Replace filter canister after every 400 hours of operation.

1. Place a clean container under the fuel filter.
2. Loosen the drain plug on the bottom of the filter canister.

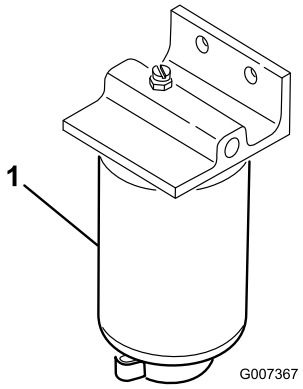

Figure 55

1. Water separator filter canister

3. Clean the area where the filter canister mounts.
4. Remove the filter canister and clean the mounting surface.
5. Lubricate the gasket on the filter canister with clean oil.
6. Install the filter canister by hand until the gasket contacts mounting surface, then rotate it an additional 1/2 turn.
7. Tighten the drain plug on the bottom of the filter canister.

Cleaning the Fuel Pick-up Tube Screen

The fuel pick-up tube, located inside the fuel tank, is equipped with a screen to help prevent debris from entering the fuel system. Remove the fuel pick-up tube and clean the screen as required.

Bleeding Air from the Fuel Injectors

Note: This procedure should be used only if the fuel system has been purged of air through normal priming procedures and the engine will not start; refer to Bleeding the Fuel System (page 29).

1. Loosen the pipe connection to the #1 nozzle and holder assembly (Figure 56).

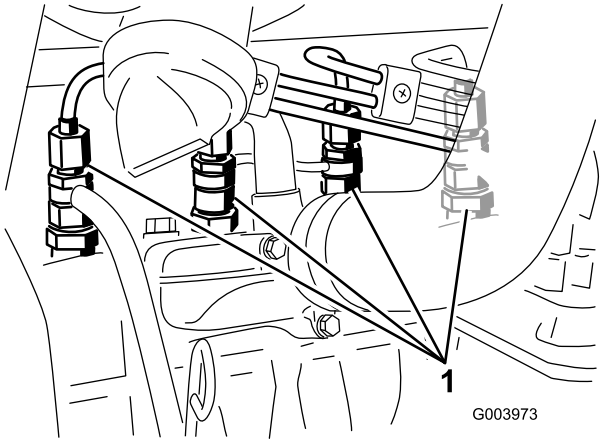

Figure 56

1. Fuel injectors

2. Turn the key in the key switch to the On position and watch the fuel flow around the connector. When you observe a solid flow of fuel, turn the key to the Off position.
3. Tighten the pipe connector securely.
4. Repeat steps 1 through 3 on the remaining nozzles.

Electrical System Maintenance

Important: Before welding on the machine, disconnect both cables from the battery, both wire harness plugs from the electronic control module, and the terminal connector from the alternator to prevent damage to the electrical system.

Servicing the Battery

WARNING

CALIFORNIA
Proposition 65 Warning

Battery posts, terminals, and related accessories contain lead and lead compounds, chemicals known to the State of California to cause cancer and reproductive harm. Wash hands after handling.

⚠ DANGER

Battery electrolyte contains sulfuric acid which is a deadly poison and causes severe burns.

- **Do not drink electrolyte and avoid contact with skin, eyes, or clothing. Wear safety glasses to shield your eyes and rubber gloves to protect your hands.**
- **Fill the battery where clean water is always available for flushing the skin.**

⚠ WARNING

Charging the battery produces gasses that can explode.

Never smoke near the battery and keep sparks and flames away from it.

Check the battery condition weekly or after every 50 hours of operation. Keep the terminals and the entire battery case clean because a dirty battery will discharge slowly. To clean the battery, wash the entire case with a solution of baking soda and water. Rinse it with clear water.

Checking the Fuses

There are 8 fuses in the electrical system. The fuse block (Figure 57) is located behind the control arm access panel.

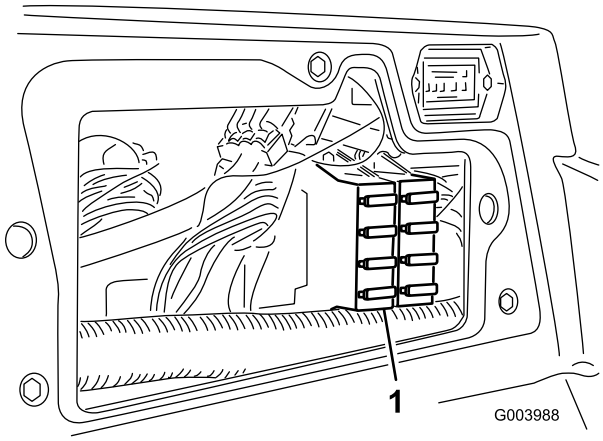

Figure 57

1. Fuse block

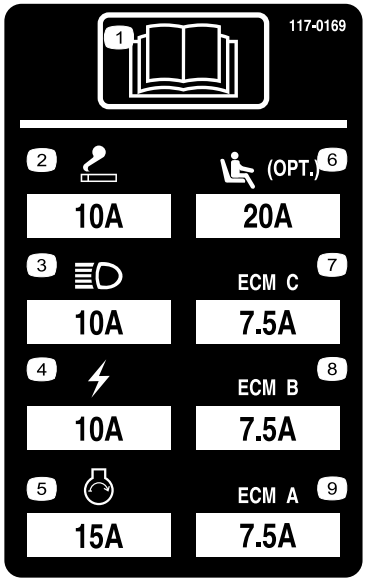

Figure 58

Drive System Maintenance

Adjusting the Traction Drive for Neutral

The machine must not creep when the traction pedal is released. If it does creep, adjust as follows:

1. Park the machine on a level surface, stop the engine, and lower the cutting units to the floor.
2. Jack up the front of the machine until the front tires are off the shop floor. Support the machine with jack stands to prevent it from falling accidentally.

   Note: On 4-wheel-drive models, the rear tires must also be off the shop floor.
3. On the right side of the hydrostat, loosen the locknut on the traction adjustment cam (Figure 59).

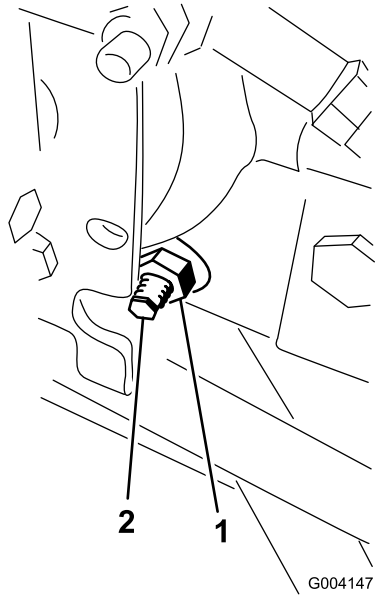

Figure 59

1. Locknut
2. Traction adjustment cam

⚠ WARNING

The engine must be running so the final adjustment of the traction adjustment cam can be performed. This could cause personal injury.

Keep hands, feet, face, and other body parts away from the muffler, other hot parts of the engine, and any rotating parts.

4. Start the engine and rotate the cam hex in either direction until the wheels cease rotation.
5. Tighten the locknut to secure the adjustment.

6. Stop the engine. Remove the jack stands and lower the machine to the shop floor.
7. Test drive the machine to make sure that it does not creep.

Adjusting the Rear Wheel Toe-in

1. Rotate the steering wheel so that the rear wheels are straight ahead.
2. Loosen the jam nut on each end of the tie rod (Figure 60).

   Note: The end of the tie rod with the external groove is a left-hand thread.

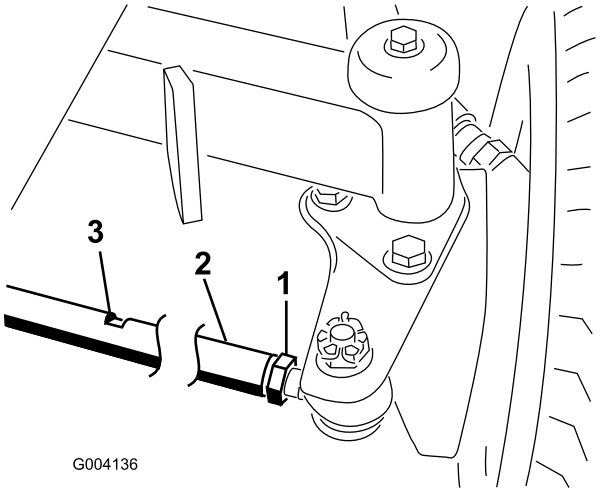

Figure 60

1. Jam nut
2. Tie rod
3. Wrench slot

3. Using the wrench slot, rotate the tie rod.
4. Measure the distance at the front and rear of the rear wheels at axle height. The distance at the front of the rear wheels should be less than 6 mm (1/4 inch) of the distance measured at the rear of the wheels.
5. Repeat procedure as required.

Cooling System Maintenance

Removing Debris from the Cooling System

Remove debris from the screen, oil coolers, and radiator daily (clean more frequently in dirty conditions).

1. Turn the engine off and remove the key from the ignition switch.
2. Thoroughly clean all debris out of the engine area.
3. Unlatch the clamp and pivot open the rear screen (Figure 61).

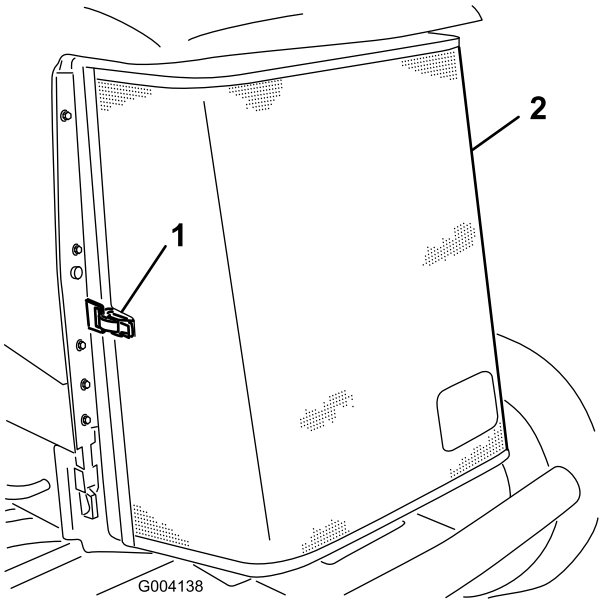

Figure 61

1. Rear screen latch
2. Rear screen

4. Clean the screen thoroughly with compressed air.
5. Pivot the latches inward to release the oil cooler (Figure 62).

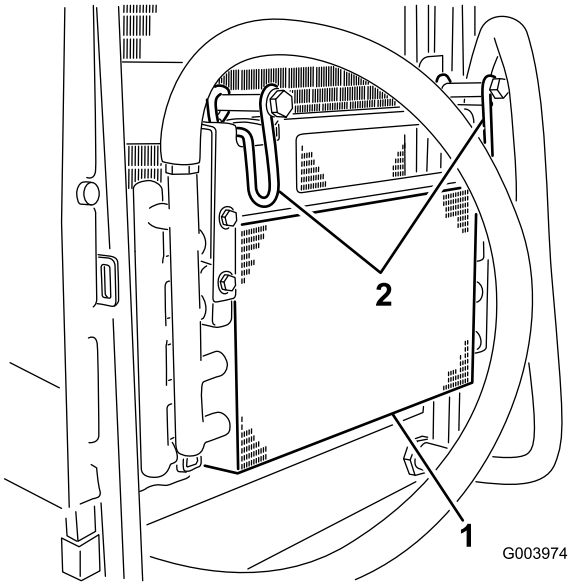

Figure 62

1. Oil cooler
2. Oil cooler latches

6. Thoroughly clean both sides of the oil cooler and the radiator (Figure 63) with compressed air.

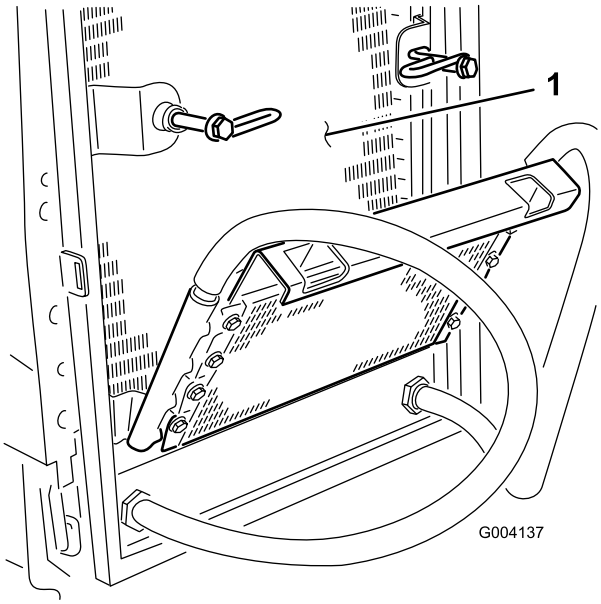

Figure 63

1. Radiator

7. Pivot the oil cooler back into position and secure the latches.
8. Close the screen and secure the latch.

Brake Maintenance

Adjusting the Parking Brakes

Adjust the brakes when there is more than 2.5 cm (1 inch) of free travel (Figure 64) of the brake pedal, or when more holding force is required. Free travel is the distance the brake pedal moves before you feel braking resistance.

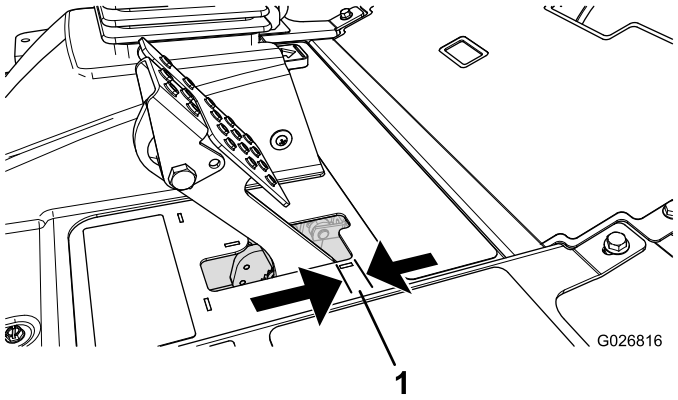

Figure 64

1. Free travel

Note: Use the wheel motor backlash to rock the drums back and forth to ensure that the drums are free, prior to and after the adjustment.

1. To reduce free travel of the brake pedals, tighten the brakes by loosening the front nut on the threaded end of the brake cable (Figure 65).

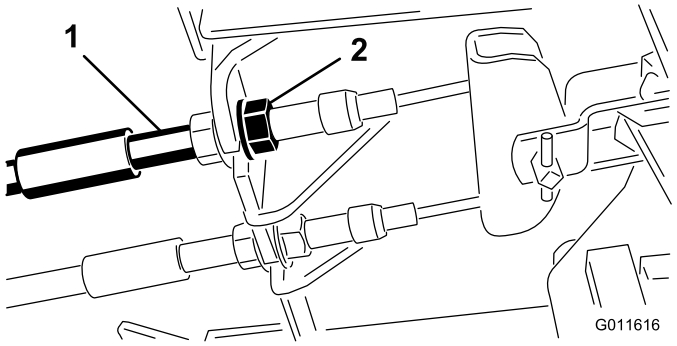

Figure 65

1. Brake cables
2. Front nuts

2. Tighten the rear nut to move the cable backward until brake pedals have 6 to 13 mm (1/4 to 1/2 inch) of free travel (Figure 64), before wheel lock-up is achieved.
3. Tighten the front nuts, ensuring that both cables actuate the brakes simultaneously.

   Note: Ensure that the cable conduit does not rotate during the tightening procedure.

Adjusting the Parking Brake Latch

If the parking brake fails to engage and latch, an adjustment to the brake pawl is required.

1. Loosen the 2 screws securing the parking brake pawl to the frame (Figure 66).

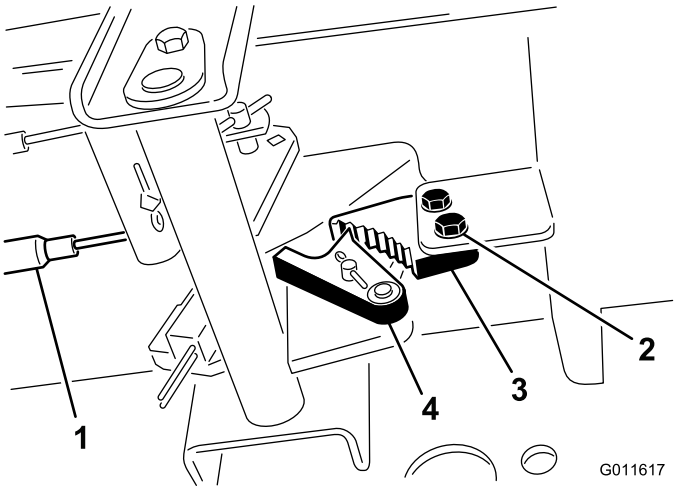

Figure 66

1. Brake cables
2. Screws (2)
3. Parking brake pawl
4. Brake detent

2. Press the parking brake pedal forward until the brake detent completely engages on the brake pawl (Figure 66).
3. Tighten the 2 screws locking the adjustment.
4. Press the brake pedal to release the parking brake.
5. Check the adjustment and adjust it as required.

Belt Maintenance

Check the condition and tension of the alternator belt after the first day of operation and every 100 operating hours thereafter.

Tensioning the Alternator Belt

1. Open the hood.
2. Check the tension of the alternator belt by pressing it (Figure 67) midway between the alternator and the crankshaft pulleys with 10 kg (22 lb) of force.

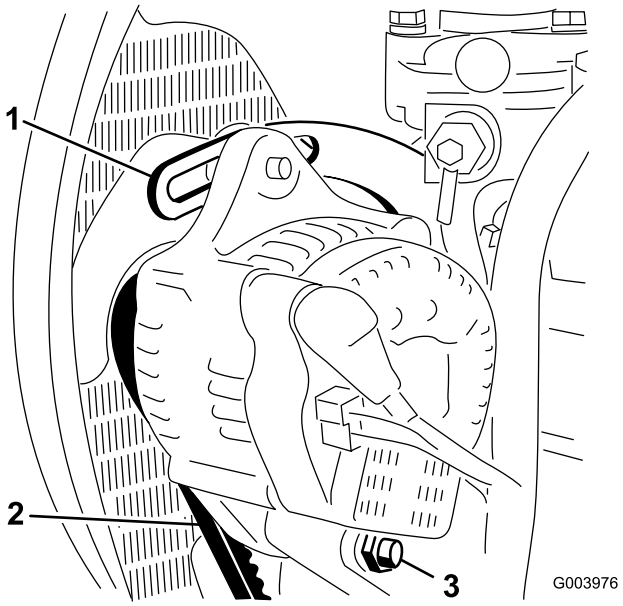

Figure 67

1. Brace
2. Alternator belt
3. Pivot bolt

Note: The belt should deflect 11 mm (7/16 inch). If the deflection is incorrect, proceed to step 3. If correct, continue operation.

3. Loosen the bolt securing the brace to the engine (Figure 67), the bolt securing the alternator to the brace and the pivot bolt.
4. Insert a pry bar between the alternator and the engine and pry out on the alternator.
5. When you achieve the proper tension, tighten the alternator, brace and pivot bolts to secure the adjustment.

Hydraulic System Maintenance

Changing the Hydraulic Fluid

Change the hydraulic fluid after every 800 operating hours, in normal conditions. If the fluid becomes contaminated, contact your local Toro distributor because the system must be flushed. Contaminated fluid looks milky or black when compared to clean oil.

1. Stop the engine and raise the hood.
2. Place a large drain pan under the fitting secured to the bottom of the hydraulic-fluid reservoir (Figure 68).

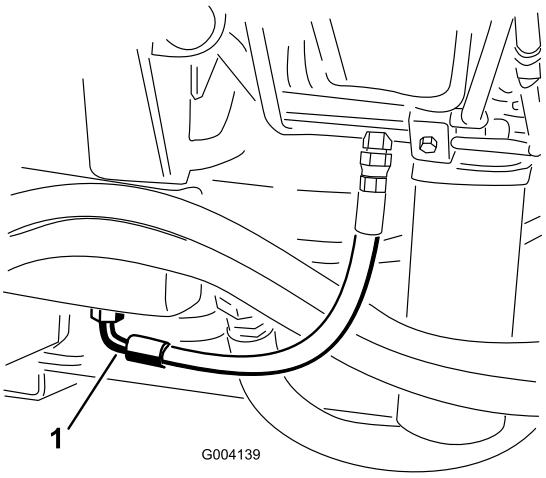

Figure 68

1. Hose

3. Disconnect the hose from the bottom of the fitting and let the hydraulic fluid flow into the drain pan.
4. Install the hose when hydraulic fluid stops draining.
5. Fill the reservoir with approximately 56.7 liters (15 US gallons) of hydraulic fluid; refer to Checking the Hydraulic Fluid (page 28).

   Important: Use only the hydraulic fluids specified. Other fluids could cause system damage.
6. Install the reservoir cap.
7. Start the engine and use all of the hydraulic controls to distribute hydraulic fluid throughout the system. Also check for leaks.
8. Stop the engine.
9. Check the level of the hydraulic fluid and add enough to raise level to the Full mark on the dipstick.

   Important: Do not overfill the reservoir.

Replacing the Hydraulic Filters

The hydraulic system is equipped with a service interval indicator (Figure 69). With the engine running at operating temperature, view the indicator, it should be in the green zone. When the indicator is in the red zone, change the hydraulic filters.

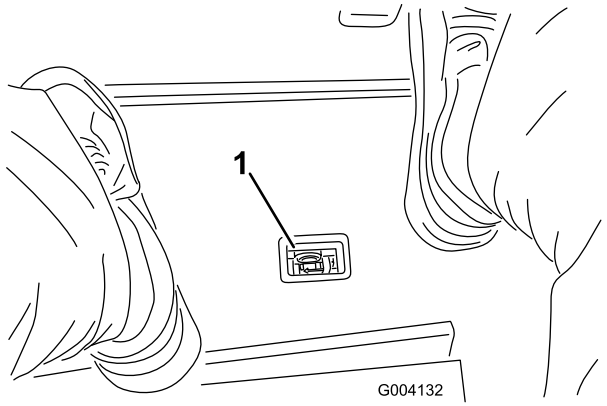

Figure 69

1. Hydraulic filter restriction indicator

Important: Use of any other filters may void the warranty on some components.

1. Position the machine on a level surface, lower the cutting units, stop the engine, engage the parking brake, and remove the key from the ignition switch.
2. Clean the area around the filter mounting area and place a drain pan under filter (Figure 70) and (Figure 71).

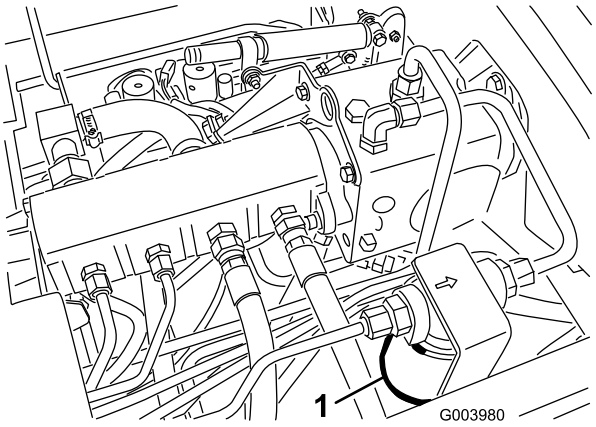

Figure 70

1. Hydraulic filter

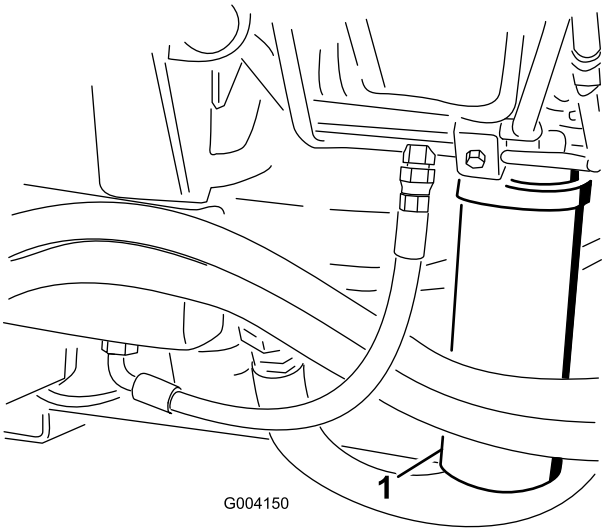

Figure 71

1. Hydraulic filter

3. Remove the filter.
4. Lubricate the gasket on the new filter with hydraulic oil.
5. Ensure that the filter mounting area is clean.
6. Install the filter by hand until the gasket contacts the mounting surface, then rotate it an additional 1/2 turn.
7. Repeat the procedure on the other filter.
8. Start the engine and let it run for about 2 minutes to purge air from the system.
9. Stop the engine and check for leaks.

Checking the Hydraulic Lines and Hoses

Daily, check hydraulic lines and hoses for leaks, kinked lines, loose mounting supports, wear, loose fittings, weather deterioration, and chemical deterioration. Make all necessary repairs before operating.

⚠ WARNING

Hydraulic fluid escaping under pressure can penetrate skin and cause injury.

- **Make sure that all hydraulic fluid hoses and lines are in good condition and all hydraulic connections and fittings are tight before applying pressure to the hydraulic system.**
- **Keep your body and hands away from pin hole leaks or nozzles that eject high pressure hydraulic fluid.**
- **Use cardboard or paper to find hydraulic leaks.**
- **Safely relieve all pressure in the hydraulic system before performing any work on the hydraulic system.**
- **Get immediate medical help if fluid is injected into skin.**

Using the Hydraulic System Test Ports

Use the hydraulic system test ports to test the pressure in the hydraulic circuits. Contact your local Toro distributor for assistance.

Use the test ports on the front hydraulic tubes (Figure 72) to assist in troubleshooting the traction circuit.

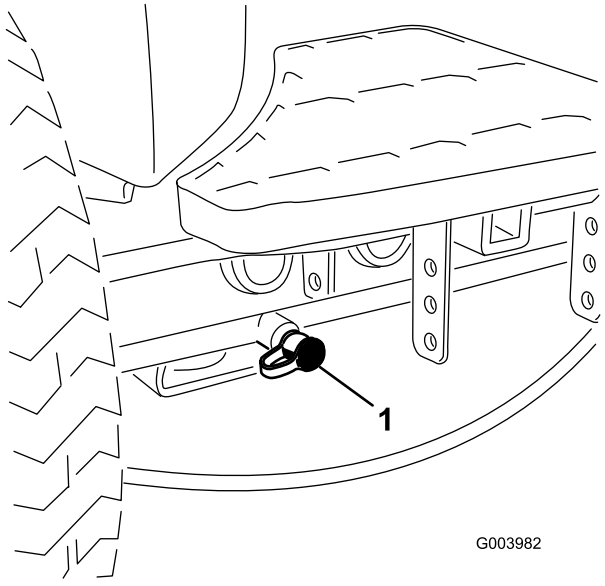

Figure 72

1. Traction-circuit test port

Use the test ports on the mow manifold block (Figure 73) to assist in troubleshooting the mow circuit.

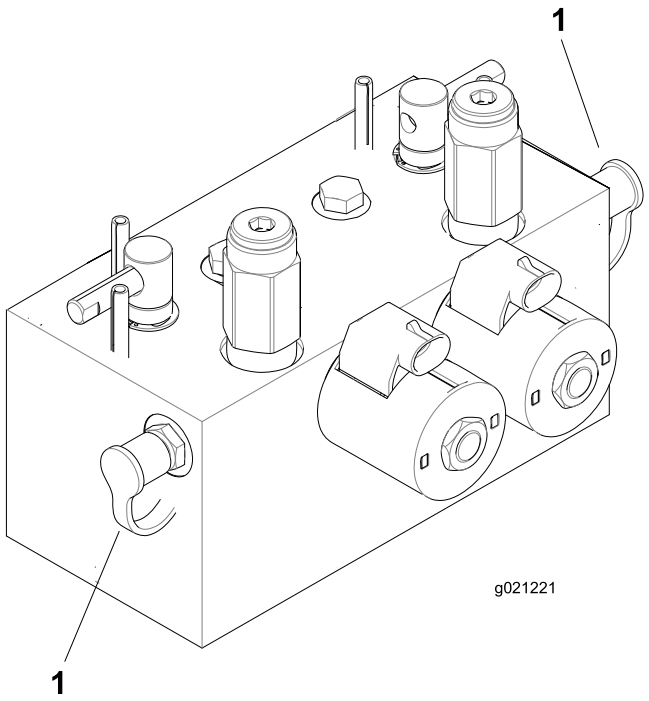

Figure 73

1. Mow-circuit test ports (2)

Use the test port on the lift manifold block (Figure 74) to assist in troubleshooting the lift circuit.

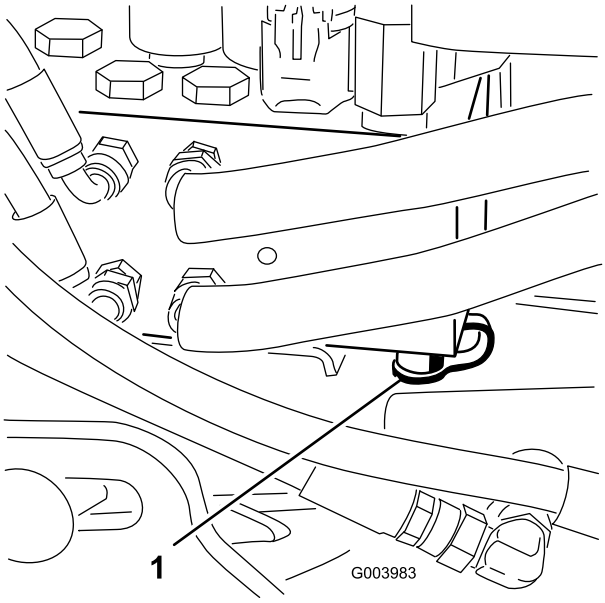

Figure 74

1. Lift-circuit test port

Cutting Unit System Maintenance

Backlapping the Cutting Units

⚠ WARNING

Contact with the reels or other moving parts can result in personal injury.

- **Keep fingers, hands, and clothing away from the reels or other moving parts.**
- **Never attempt to turn the reels by hand or foot while the engine is running.**

Note: When backlapping, the front units all operate together, and the rear units operate together.

1. Position the machine on a level surface, lower the cutting units, stop the engine, engage the parking brake, and move the Enable/Disable switch to the disable position.
2. Unlock and raise the seat to expose the backlap levers (Figure 75).
3. Make initial reel to bedknife adjustments appropriate for backlapping on all cutting units which are to be backlapped; refer to the cutting unit *Operator's Manual*.
4. Start the engine and run it at low idle speed.

⚠ DANGER

Changing the engine speed while backlapping may cause the reels to stall.

- **Never change the engine speed while backlapping.**
- **Only backlap at idle engine speed.**

5. Select either the front, rear, or both backlap levers to determine which units to backlap (Figure 75).

⚠ DANGER

To avoid personal injury, be certain that you are clear of the cutting units before proceeding.

6. With the Mow/Transport lever in the mow position, move the Enable/Disable switch to the Enable position. Move the Lower Mow/Lift control forward to start the backlapping operation on the designated reels.
7. Apply lapping compound with a long-handled brush.

   Note: Never use a short-handled brush.
8. If the reels stall or become erratic while backlapping, select a higher reel speed setting until the speed

stabilizes, then return the reel speed to your desired speed.

9. To make an adjustment to the cutting units while backlapping, turn the reels off by moving the Lower Mow/Raise lever rearward and the Enable/Disable switch to the Disable position, and then stop the engine. After completing the adjustments, repeat steps 4 through 8.

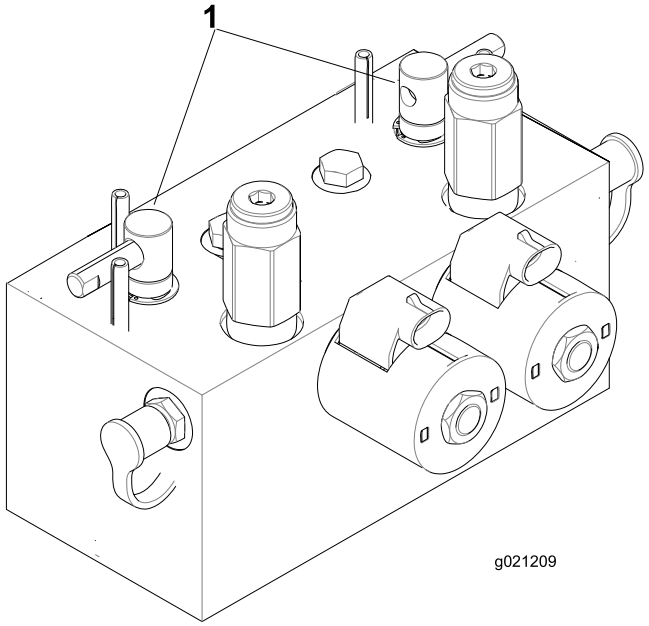

Figure 75

1. Backlap levers

10. Repeat the procedure for all cutting units you want to backlap.

11. When finished, return the backlap levers to the Mow position, lower the seat, and wash all lapping compound off of the cutting units. Adjust cutting unit reel to bedknife as needed. Adjust the cutting unit reel speed to the desired mowing setting.

Important: If the backlap switch is not returned to the Off position after backlapping, the cutting units will not raise or function properly.

Note: For a better cutting edge, run a file across the front face of the bedknife after lapping. This will remove any burrs or rough edges that may have built up on the cutting edge.

Storage

Preparing the Traction Unit

1. Thoroughly clean the traction unit, cutting units, and engine.
2. Check the tire pressure. Inflate all traction unit tires to 83 to 103 kPa (12 to 15 psi).
3. Check all fasteners for looseness and tighten them as necessary.
4. Grease all grease fittings and pivot points. Wipe up any excess lubricant.
5. Lightly sand and use touch-up paint on painted areas that are scratched, chipped, or rusted. Repair any dents in the metal body.
6. Service the battery and cables as follows:
   A. Remove the battery terminals from the battery posts.
   B. Clean the battery, terminals, and posts with a wire brush and baking soda solution.
   C. Coat the cable terminals and battery posts with Grafo 112X skin-over grease (Toro Part No. 505-47) or petroleum jelly to prevent corrosion.
   D. Slowly recharge the battery every 60 days for 24 hours to prevent lead sulfation of the battery.

Preparing the Engine

1. Drain the engine oil from the oil pan and replace the drain plug.
2. Remove and discard the oil filter. Install a new oil filter.
3. Refill the oil pan with designated quantity of motor oil.
4. Start the engine and run it at idle speed for approximately two minutes.
5. Stop the engine.
6. Thoroughly drain all fuel from the fuel tank, lines, and the fuel filter/water separator assembly.
7. Flush the fuel tank with fresh, clean diesel fuel.
8. Secure all fuel system fittings.
9. Thoroughly clean and service the air cleaner assembly.
10. Seal the air cleaner inlet and the exhaust outlet with weatherproof tape.
11. Check the antifreeze protection and add as needed for expected minimum temperature in your area.

Toro General Commercial Product Warranty

A Two-Year Limited Warranty

Conditions and Products Covered

The Toro Company and its affiliate, Toro Warranty Company, pursuant to an agreement between them, jointly warrant your Toro Commercial product ("Product") to be free from defects in materials or workmanship for two years or 1500 operational hours*, whichever occurs first. This warranty is applicable to all products with the exception of Aerators (refer to separate warranty statements for these products). Where a warrantable condition exists, we will repair the Product at no cost to you including diagnostics, labor, parts, and transportation. This warranty begins on the date the Product is delivered to the original retail purchaser.
* Product equipped with an hour meter.

Instructions for Obtaining Warranty Service

You are responsible for notifying the Commercial Products Distributor or Authorized Commercial Products Dealer from whom you purchased the Product as soon as you believe a warrantable condition exists. If you need help locating a Commercial Products Distributor or Authorized Dealer, or if you have questions regarding your warranty rights or responsibilities, you may contact us at:

Toro Commercial Products Service Department
Toro Warranty Company
8111 Lyndale Avenue South
Bloomington, MN 55420-1196

952–888–8801 or 800–952–2740
E-mail: commercial.warranty@toro.com

Owner Responsibilities

As the Product owner, you are responsible for required maintenance and adjustments stated in your *Operator's Manual*. Failure to perform required maintenance and adjustments can be grounds for disallowing a warranty claim.

Items and Conditions Not Covered

Not all product failures or malfunctions that occur during the warranty period are defects in materials or workmanship. This warranty does not cover the following:

- Product failures which result from the use of non-Toro replacement parts, or from installation and use of add-on, or modified non-Toro branded accessories and products. A separate warranty may be provided by the manufacturer of these items.
- Product failures which result from failure to perform recommended maintenance and/or adjustments. Failure to properly maintain your Toro product per the Recommended Maintenance listed in the *Operator's Manual* can result in claims for warranty being denied.
- Product failures which result from operating the Product in an abusive, negligent, or reckless manner.
- Parts subject to consumption through use unless found to be defective. Examples of parts which are consumed, or used up, during normal Product operation include, but are not limited to, brake pads and linings, clutch linings, blades, reels, rollers and bearings (sealed or greasable), bed knives, spark plugs, castor wheels and bearings, tires, filters, belts, and certain sprayer components such as diaphragms, nozzles, and check valves, etc.
- Failures caused by outside influence. Conditions considered to be outside influence include, but are not limited to, weather, storage practices, contamination, use of unapproved fuels, coolants, lubricants, additives, fertilizers, water, or chemicals, etc.
- Failure or performance issues due to the use of fuels (e.g. gasoline, diesel, or biodiesel) that do not conform to their respective industry standards.
- Normal noise, vibration, wear and tear, and deterioration.
- Normal "wear and tear" includes, but is not limited to, damage to seats due to wear or abrasion, worn painted surfaces, scratched decals or windows, etc.

Parts

Parts scheduled for replacement as required maintenance are warranted for the period of time up to the scheduled replacement time for that part. Parts replaced under this warranty are covered for the duration of the original product warranty and become the property of Toro. Toro will make the final decision whether to repair any existing part or assembly or replace it. Toro may use remanufactured parts for warranty repairs.

Deep Cycle and Lithium-Ion Battery Warranty:

Deep cycle and Lithium-Ion batteries have a specified total number of kilowatt-hours they can deliver during their lifetime. Operating, recharging, and maintenance techniques can extend or reduce total battery life. As the batteries in this product are consumed, the amount of useful work between charging intervals will slowly decrease until the battery is completely worn out. Replacement of worn out batteries, due to normal consumption, is the responsibility of the product owner. Battery replacement may be required during the normal product warranty period at owner's expense. Note: (Lithium-Ion battery only): A Lithium-Ion battery has a part only prorated warranty beginning year 3 through year 5 based on the time in service and kilowatt hours used. Refer to the *Operator's Manual* for additional information.

Maintenance is at Owner's Expense

Engine tune-up, lubrication, cleaning and polishing, replacement of filters, coolant, and completing recommended maintenance are some of the normal services Toro products require that are at the owner's expense.

General Conditions

Repair by an Authorized Toro Distributor or Dealer is your sole remedy under this warranty.

Neither The Toro Company nor Toro Warranty Company is liable for indirect, incidental or consequential damages in connection with the use of the Toro Products covered by this warranty, including any cost or expense of providing substitute equipment or service during reasonable periods of malfunction or non-use pending completion of repairs under this warranty. Except for the Emissions warranty referenced below, if applicable, there is no other express warranty. All implied warranties of merchantability and fitness for use are limited to the duration of this express warranty.

Some states do not allow exclusions of incidental or consequential damages, or limitations on how long an implied warranty lasts, so the above exclusions and limitations may not apply to you. This warranty gives you specific legal rights, and you may also have other rights which vary from state to state.

Note regarding engine warranty:

The Emissions Control System on your Product may be covered by a separate warranty meeting requirements established by the U.S. Environmental Protection Agency (EPA) and/or the California Air Resources Board (CARB). The hour limitations set forth above do not apply to the Emissions Control System Warranty. Refer to the Engine Emission Control Warranty Statement supplied with your product or contained in the engine manufacturer's documentation for details

Countries Other than the United States or Canada

Customers who have purchased Toro products exported from the United States or Canada should contact their Toro Distributor (Dealer) to obtain guarantee policies for your country, province, or state. If for any reason you are dissatisfied with your Distributor's service or have difficulty obtaining guarantee information, contact the Toro importer.

374-0253 Rev C