Form No. 3392-647 Rev A

TORO®

Count on it.

Operator's Manual

8 or 11-Blade DPA Cutting Unit with 7in Reel

Reelmaster® 5010-H Series Traction Unit

Model No. 03636—Serial No. 315000001 and Up
Model No. 03637—Serial No. 315000001 and Up

Register at www.Toro.com.
Original Instructions (EN)

CE

3392-647 A

⚠ WARNING

CALIFORNIA
Proposition 65 Warning

This product contains a chemical or chemicals known to the State of California to cause cancer, birth defects, or reproductive harm.

This product complies with all relevant European directives. For details, please see the Declaration of Incorporation (DOI) at the back of this publication.

Introduction

Read this information carefully to learn how to operate and maintain your product properly and to avoid injury and product damage. You are responsible for operating the product properly and safely.

You may contact Toro directly at www.Toro.com for product safety and operation training materials, accessory information, help finding a dealer, or to register your product.

Whenever you need service, genuine Toro parts, or additional information, contact an Authorized Service Dealer or Toro Customer Service and have the model and serial numbers of your product ready. Figure 1 identifies the location of the model and serial numbers on the product. Write the numbers in the space provided.

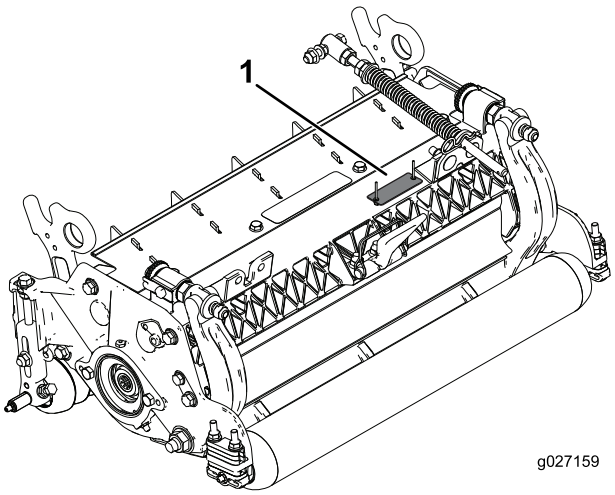

Figure 1

1. Location of the model and serial numbers

Model No. _____

Serial No. _____

This manual identifies potential hazards and has safety messages identified by the safety alert symbol (Figure 2), which signals a hazard that may cause serious injury or death if you do not follow the recommended precautions.

Figure 2

1. Safety alert symbol

This manual uses 2 words to highlight information. **Important** calls attention to special mechanical information and **Note** emphasizes general information worthy of special attention.

Contents

Safety 3
Safety and Instructional Decals 3
Setup 4
1 Inspecting the Cutting Unit 4
2 Cutting Unit Kickstand 4
3 Adjusting the Rear Shield 4
4 Installing the Loose Parts 5
Product Overview 6
Specifications 6
Cutting Unit Accessories and Kits (see parts catalog for part numbers) 6
Operation 7
Making Adjustments 7
Height-of-Cut Chart Terms 9
Servicing the Bedknife 14
Maintenance 15
Lubrication 15
Servicing the Bedbar 15
Servicing the HD Dual Point Adjusters (DPA) 17
Servicing the Roller 18

© 2015—The Toro® Company
8111 Lyndale Avenue South
Bloomington, MN 55420

Contact us at www.Toro.com.
Printed in the USA
All Rights Reserved

Safety

This machine has been designed in accordance with EN ISO 5395:2013.

To control hazards and prevent accidents, it is essential that those who operate, transport, maintain, and store the machine be aware, concerned, and properly trained. Improperly using the machine can result in injury or death. To reduce the potential for injury or death, comply with the following safety instructions.

- Read, understand, and follow all instructions in the traction unit and the cutting unit *operator's manual* before operating the cutting unit.
- Never allow children to operate the traction unit or cutting units. Do not allow adults to operate traction unit or cutting units without proper instruction. Only trained operators who have read this manual should operate the traction unit or cutting units.
- Never operate the cutting units when under the influence of drugs or alcohol.
- Keep all shields and safety devices in place. If a shield, safety device or decal is illegible or damaged, repair or replace it before operation is commenced. Also tighten any loose nuts, bolts, and screws to ensure that the cutting unit is in safe operating condition.
- Always wear substantial, slip resistant footwear. Do not operate the cutting units while wearing sandals, tennis shoes, or sneakers. Also, do not wear loose fitting clothing which could get caught in moving parts. Always wear long pants. Wearing safety glasses, safety shoes and a helmet is advisable and required by some local ordinances and insurance regulations.
- Remove all debris or other objects that might be picked up and thrown by the cutting unit reel blades. Keep all bystanders away from the working area.
- If the cutting blades strike a solid object or the unit vibrates abnormally, stop and shut the engine off. Check cutting unit for damaged parts. Repair any damage before starting and operating the cutting unit.
- Lower the cutting units to the ground, and remove key from ignition switch whenever you leave the machine unattended.
- Ensure that the cutting units are in safe operating condition by keeping nuts, bolts, and screws tight.
- Remove the key from the ignition switch to prevent the engine from accidently starting when servicing, adjusting, or storing the machine.
- Perform only those maintenance instructions described in this manual. For major repairs or assistance, contact an Authorized Toro Distributor.
- To ensure optimum performance and safety, always purchase genuine Toro replacement parts and accessories. **Do not use "will-fit" replacement parts and accessories made by other manufacturers**. Using unapproved replacement parts and accessories could void the warranty.

Safety and Instructional Decals

Safety decals and instructions are easily visible to the operator and are located near any area of potential danger. Replace any decal that is damaged or lost.

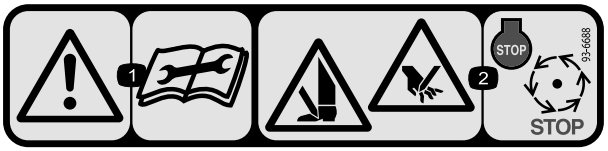

93–6688

1. Warning—read the *Operator's Manual* before performing maintenance.
2. Cutting hazard of hand or foot—stop the engine and wait for all moving parts to stop.

Setup

Loose Parts

Use the chart below to verify that all parts have been shipped.

Procedure	Description	Qty.	Use
1	Cutting unit	1	Inspect the cutting unit.
2	No parts required	–	Use the kickstand when tipping the cutting unit.
3	No parts required	–	Adjust the rear shield.
4	Straight grease fitting O-ring	1 1	Install the loose parts.

Media and Additional Parts

Description	Qty.	Use
Parts Catalog Operator's Manual	1 1	Review the material and save in an appropriate place.

Note: Determine the left and right sides of the machine from the normal operating position.

1

Inspecting the Cutting Unit

Parts needed for this procedure:

1	Cutting unit

Procedure

After the cutting unit is removed from the box, inspect the following:

1. Check each end of the reel for grease.

   Note: Grease should be visibly evident in the internal splines of the reel shaft.

2. Ensure that all nuts and bolts are securely tightened.
3. Make sure that the carrier frame suspension operates freely and does not bind when moved back and forth.

2

Cutting Unit Kickstand

No Parts Required

Procedure

Whenever the cutting unit has to be tipped to expose the bedknife/reel, prop up the rear of the cutting unit with the kickstand (supplied with the traction unit) to make sure that the nuts on the back end of the bedbar adjusting screws are not resting on the work surface (Figure 3).

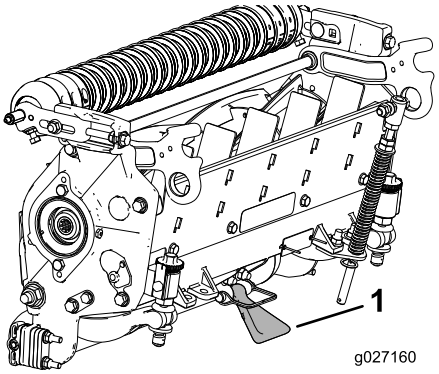

Figure 3

1. Cutting unit kickstand

3

Adjusting the Rear Shield

No Parts Required

Procedure

Under most conditions, best dispersion is attained when the rear shield is closed (front discharge). When conditions are heavy or wet, the rear shield may be opened.

To open the rear shield (Figure 4), loosen the cap screw securing the shield to the left side plate, rotate the shield to the open position and tighten the cap screw.

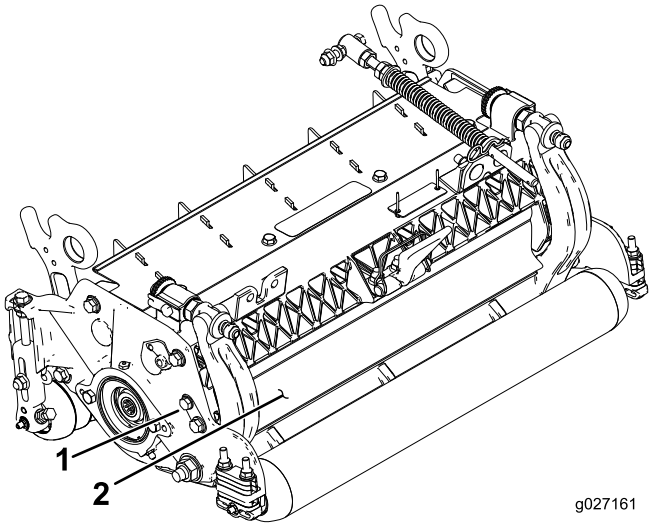

Figure 4

1. Cap screw
2. Rear shield

4

Installing the Loose Parts

Parts needed for this procedure:

1	Straight grease fitting
1	O-ring

Procedure

The grease fitting must be installed on the reel motor side of the cutting unit. Use the following diagram to determine the position of the reel motors.

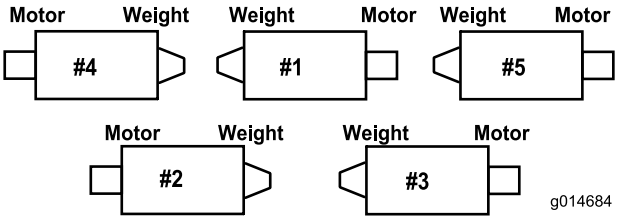

Figure 5

1. Remove and discard the set screw on the reel-motor side-plate (Figure 6).

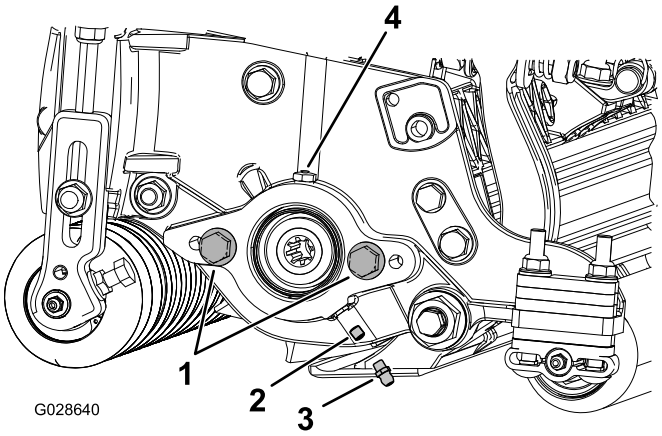

Figure 6

1. Cap screw (2)
2. Set screw
3. Grease fitting
4. Grease vent

2. Install the straight grease fitting (Figure 6).
3. If there are no capscrews on the reel-motor side-plate, install them (Figure 6).
4. Install the O-ring on the reel motor (Figure 7).

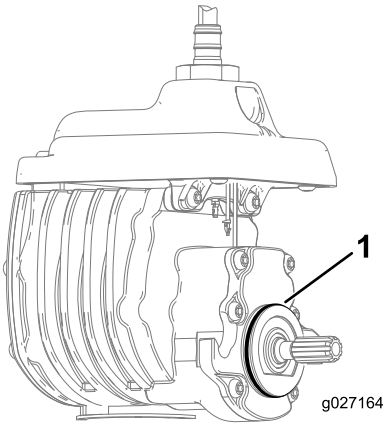

Figure 7

1. O-ring

5. Install the reel motor, and grease the side plate until excess grease pours out of the grease vent (Figure 6).

Product Overview

Specifications

Cutting Unit	Weight
03636	54 kg (118 lb)
03637	55 kg (121 lb)

Cutting Unit Accessories and Kits (see parts catalog for part numbers)

Note: All accessories and kits are 1 per cutting unit unless otherwise specified.

Broomer Kit: Multiple brush strips woven into the helical groomer blades improve the effectiveness of the groomer kit. Performance of the groomer is enhanced by enabling a full width "Brooming" effect of turf while opening up the canopy for better grass clipping integration. The combination of groomer and broomer systems optimize the quality of cut and after-cut appearance for more consistent playing conditions.

Collar Kit (6 needed per roller): Reduces over-lap marks for warm season grasses (Bermuda, Zoysia, Paspalum). This kit is installed on the outer 3 grooves of the existing Wiehle roller, but is not as aggressive as the Shoulder roller.

Comb/Scraper Kit: A fixed comb installed behind the front roller which helps reduce grain and spongy turf by standing up the grass before cutting. A scraper for the front Wiehle roller is included in the kit.

Full Front Roller: Produces a more pronounced striping (repeated cutting in the same direction/path). Effective height-of-cut is raised and the quality of the cut is reduced.

Grass Basket Kit: A series of clipping collection baskets attached to the front of the cutting units to collect grass clippings.

Groomer Kit: Rotating blades assembled behind the front roller which provide the best method for reducing grain and spongy turf by standing up the grass before cutting. The groomer also knocks off any dew for decreased stickiness and clumping. This kit opens up the canopy for better grass clipping integration, and lifts grass for a clean crisp cut. The overall design improves the quality of cut for healthier turf grass while improving the after cut appearance.

High HOC Kit: New front roller brackets and additional spacers for the rear roller allows the cutting unit to achieve heights of cut above 5 mm (1.00 inch). The new front roller brackets also moves the front roller out farther to improve after-cut appearance at these heights of cut.

Long Rear Roller: Helps reduce over-lap marks and mismatch between cutting units for warm season grasses (Bermuda, Zoysia, Paspalum).

Rear Lift Cylinder Kit: Collars assembled on the rear cutting unit lift arm cylinders to limit the height of the cutting units. This increases the area for the rear grass baskets.

Rear Roller Brush Kit: A high-speed, high-contact brush that keeps the rear roller free of grass and debris, which maintains a consistent height of cut and prevents clumping. This leads to a better after-cut appearance.

Roller Rebuild Kit: Includes all the bearings, bearing nuts, inner seals, and outer seals required to rebuild a roller.

Roller Rebuild Tool Kit: Includes all the tools and installation instructions required to rebuild a roller with the roller rebuild kit.

Scrapers (Wiehle, Shoulder, Rear roller, Full Front Roller): Fixed scrapers for all optional rollers are available for reducing grass build up on rollers which can affect height-of-cut settings.

Shoulder Roller: Helps reduce over-lap marks for warm season grasses (Bermuda, Zoysia, Paspalum).

Weight Kit: Includes counter weights that attach to the cutting units and maintain balance when other accessories are not in use.

Operation

Note: Determine the left and right sides of the machine from the normal operating position.

Making Adjustments

Adjusting the Bedknife to the Reel

Use this procedure to set the bedknife to the reel and to check the condition of the reel and bedknife and their interaction. After completing this procedure, always test the cutting unit performance under your field conditions. You may need to make further adjustments to obtain optimal cutting performance.

Important: Do not overtighten the bedknife to the reel or you will damage it.

- After backlapping the cutting unit or grinding the reel, you may need to mow with the cutting unit for a few minutes and then perform this procedure to adjust the bedknife to the reel as the reel and bedknife adjust to each other.
- You may need additional adjustments if the turf is extremely dense or your cutting height is very low.

You will need the following tools to complete this procedure:

- Shim 0.05 mm (0.002 inch)
- Cutting performance paper

1. Position the cutting unit on a flat, level work surface.
2. Turn the bedbar adjusting screws counterclockwise to ensure that the bedbar does not contact the reel (Figure 8).

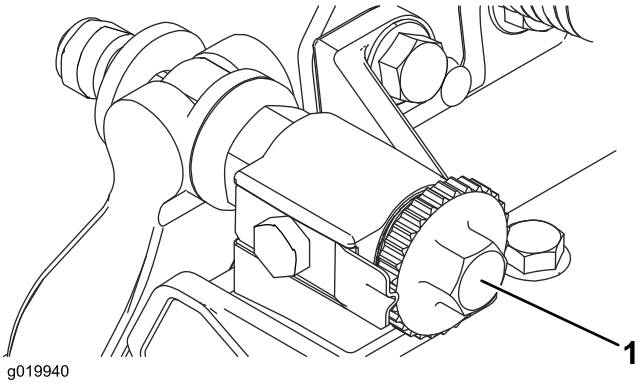

Figure 8

1. Bedbar adjusting screw

3. Tip the mower to expose the bedknife and reel.

   Important: Make sure that the nuts on the back end of the bedbar adjusting screws are not resting on the work surface (Figure 9).

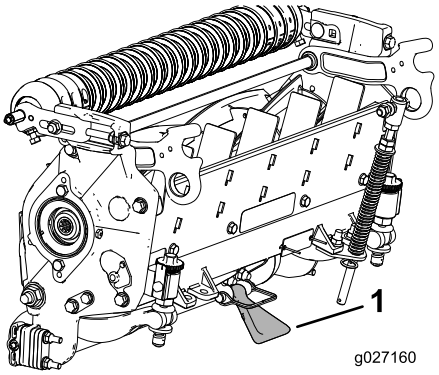

Figure 9

1. Cutting unit kickstand

4. Rotate the reel so that a blade crosses the bedknife approximately 25 mm (1 inch) in from the end of the bedknife on the right hand side of the cutting unit.

   Note: Put an identifying mark on this blade to make subsequent adjustments easier.

5. Insert the 0.05 mm (0.002 inch) shim between the marked reel blade and the bedknife at the point where the blade crosses the bedknife.
6. Turn the right bedbar adjuster clockwise until you feel **light** pressure (i.e. drag) on the shim, then back off the bedbar adjuster 2 clicks and remove the shim.

   Note: Adjusting 1 side of the cutting unit affects the other side, the 2 clicks will provide clearance for when the other side is adjusted.

   Note: If starting with a large gap, both sides should initially be drawn closer by alternately tightening the right and left hand sides.

7. **Slowly** rotate the reel so that the same blade that you checked on the right side is crossing the bedknife approximately 25 mm (1 inch) in from the end of the bedknife on the left hand side of the cutting unit.
8. Turn the left bedbar adjuster clockwise until the shim can be slid through the reel to bedknife gap with light drag.
9. Return to the right side and adjust as necessary to get light drag on the shim between the same blade and bedknife.
10. Repeat steps 8 and 9 until the shim can be slid through both gaps with slight drag, but one click in on both sides prevents the shim from passing through on both sides.

    Note: The bedknife is now parallel to the reel.

    Note: This procedure should not be needed on daily adjustments, but should be done after grinding or disassembly.

11. From this position (i.e. 1 click in and shim not passing through) turn the bedbar adjusters clockwise 1 click each.

Note: Each click turned moves the bedknife 0.022 mm (0.0009 inch). **Do not over tighten the adjusting screws.**

12. Test the cutting performance by inserting a long strip of Toro cutting performance paper between reel and bedknife, perpendicular to the bedknife (Figure 10).

    Note: **Slowly** rotate the reel forward; it should cut the paper.

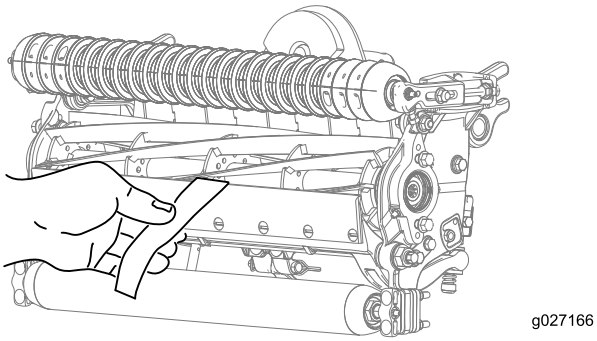

Figure 10

Note: Should excessive reel drag be evident, it will be either necessary to backlap or regrind the cutting unit to achieve the sharp edges needed for precision cutting.

Adjusting the Rear Roller

1. Adjust the rear roller brackets (Figure 11) to the desired height-of-cut range by positioning the required amount of spacers below the side plate mounting flange (Figure 11) per the HOC Chart.

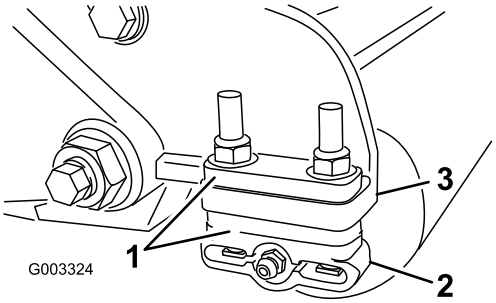

Figure 11

1. Spacer
2. Roller bracket
3. Side plate mounting flange

2. Raise the rear of the cutting unit and place a block under the bedknife.
3. Remove the 2 nuts securing each roller bracket and the spacer to each side plate mounting flange.
4. Lower the roller and the screws from the side plate mounting flanges and spacers.
5. Place the spacers onto the screws on the roller brackets.
6. Re-secure the roller bracket and the spacers to underside of the side plate mounting flanges with the nuts previously removed.
7. Verify that the bedknife-to-reel contact is correct. Tip the mower to expose the front and rear rollers and the bedknife.

   Note: The position of the rear roller to the reel is controlled by the machining tolerances of the assembled components, and so paralleling is not required. A limited amount of adjustment is possible by setting the cutting unit on a surface plate and loosening the side plate mounting cap screws (Figure 12).

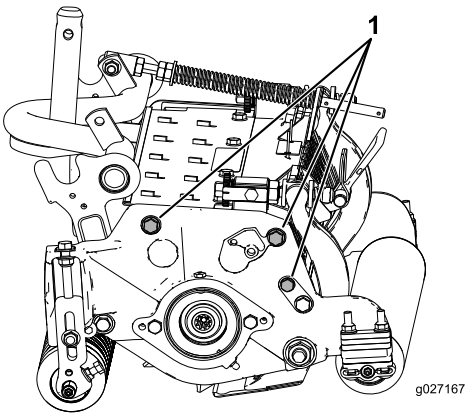

Figure 12

1. Side plate mounting cap screws

8. Adjust and tighten the cap screws and torque the cap screws to 37–45 N-m (27-33 ft.-lb).

Height-of-Cut Chart Terms

Height-of-Cut Setting (HOC)

The desired height-of-cut.

Bench Set Height-of-Cut

The bench set height-of-cut is the height at which the top edge of the bedknife is set above a flat level surface that contacts the bottom of both the front and rear roller.

Effective Height-of-Cut

This is the actual height that the grass has been cut. For a given bench set height-of-cut, the actual height-of-cut will vary depending on the type of grass, time of year, turf, and soil conditions. The cutting unit setup (aggressiveness of cut, rollers, bedknives, attachments installed, turf compensation settings, etc.) will also affect the effective height of cut. Check the effective height-of-cut using the Turf Evaluator (model 04399) regularly to determine the desired bench set height of cut.

Aggressiveness of Cut

Aggressiveness of cut has a significant impact on the performance of the cutting unit. Aggressiveness of Cut refers to the angle of the bedknife relative to the ground (Figure 13).

The best cutting unit setup is dependent on your turf conditions and desired results. Experience with the cutting unit on your turf will determine the best setting to use. Aggressiveness of cut may be adjusted throughout the cutting season to allow for various turf conditions.

In general, less to normal aggressive settings are more appropriate for warm season grasses (Bermuda, paspalum, zoysia) while cool season grasses (bent, bluegrass, rye) may require normal to more aggressive setups. More aggressive setups cut more grass off by allowing the spinning reel to pull more grass up into the bedknife.

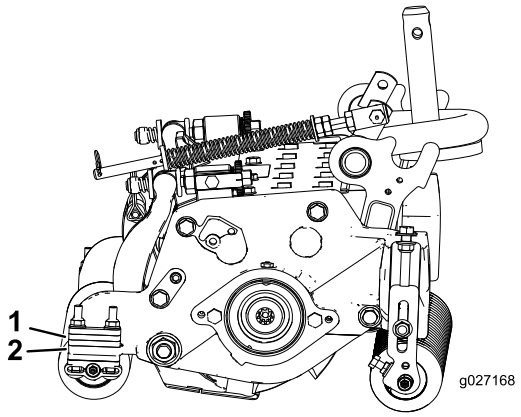

Figure 13

1. Rear spacers
2. Side plate mounting flange
3. Aggressiveness of cut

Rear Spacers

The number of rear spacers determines the aggressiveness of cut for the cutting unit. For a given height of cut, adding spacers, below the side plate mounting flange, increases the aggressiveness of the cutting unit. All cutting units on a given machine must be set to the same aggressiveness of cut (Number of rear spacers, part no. 106-3925), otherwise the after-cut appearance could be negatively affected (Figure 13).

Chain Links

The location at which the lift arm chain is attached determines the rear roller pitch angle (Figure 14).

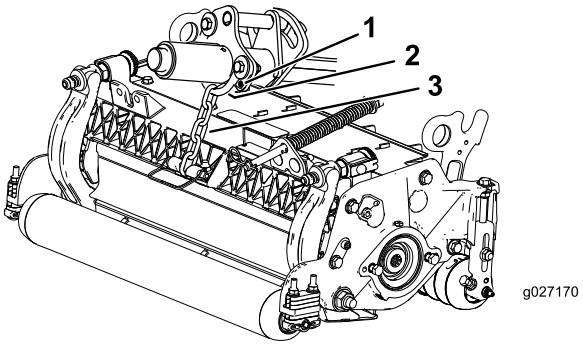

Figure 14

1. Lift chain
2. U-backet
3. Bottom hole

Groomer

These are the recommended height-of-cut settings when a groomer kit is installed on the cutting unit.

Height-of-Cut Chart

These are the recommended height-of- cut settings when a groomer kit is installed on the cutting unit.

HOC Setting	Aggressiveness of Cut	No. of Rear Spacers	No. of Chain Links	With Groomer kits installed**
0.64 cm (0.250 inch)	Less Normal More	0 0 1	5 5 5	Y Y -
0.95 cm (0.375 inch)	Less Normal More	0 1 2	5 5 5	Y Y -
1.27 cm (0.500 inch)	Less Normal More	0 1 2	5 5 5	Y Y Y
1.56 cm (0.625 inch)	Less Normal More	1 2 3	5 5 5	Y Y -
1.91 cm (0.750 inch)	Less Normal More	2 3 4	5 5 5	Y Y -
2.22 cm (0.875 inch)	Less Normal More	2 3 4	5 5 5	Y Y -
2.54 cm (1.000 inch)	Less Normal More	3 4 5	5 5 4+	Y Y -
2.86 cm (1.125 inches)	Less Normal More	4 5 6	5 5 5	- - -
3.18 cm (1.250 inches)* +	Less Normal More	4 5 6	5 5 5	- - -
3.49 cm (1.375 inches)*+	Less Normal More	4 5 6	5 5 5	- - -
3.81 cm (1.500 inches)*+	Less Normal More	5 6 7	5 5 5	- - -
4.13 cm (1.625 inches)*+	Less Normal More	6 7 8	4 4 4	- - -
4.44 cm (1.750 inches)*+	Less Normal More	6 7 8	4 4 5	- - -
4.76 cm (1.875 inches)*+	Less Normal More	7 8 9	4 5 5	- - -
5.08 cm (2.000 inches)*+	Less Normal More	7 8 9	5 5 5	- - -

+ Indicates the U bracket, on lift arm, is positioned in the bottom hole (Figure 14).
* High HOC Kit (Part No. 110-9600) must be installed. Position the HOC bracket in the top side plate hole.
** Y indicates that this combination of HOC and spacers can be used with groomers.

Note: Changing 1 chain link changes the rear roller pitch angle movement by 4.5 degrees.

Note: Changing the U-bracket on the lift arm to the bottom hole adds 2.3 degrees to the rear roller pitch angle.

Adjusting the Height-of-Cut

Note: For heights-of-cut greater than 2.54 cm (1.00 inch) the High Height-of-Cut Kit must be installed.

1. Loosen the locknuts securing the height-of-cut arms to the cutting unit side plates (Figure 15).

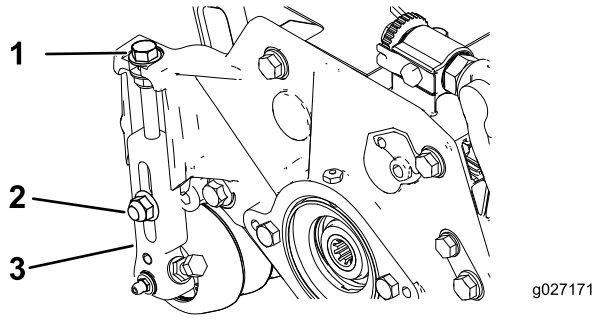

Figure 15

1. Adjusting screw
2. Locknut
3. Height-of-cut arm

2. Loosen the nut on the gauge bar (Figure 16) and set the adjusting screw to the desired height-of-cut.

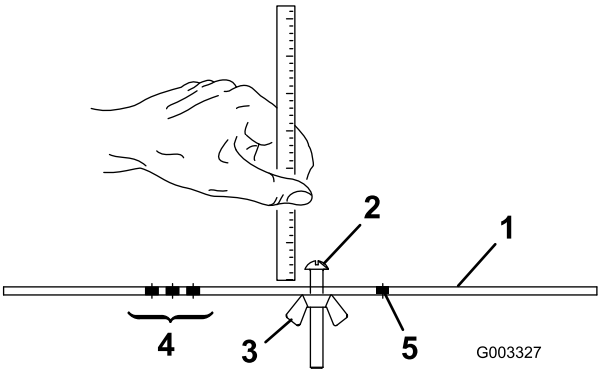

Figure 16

1. Gauge bar
2. Height adjusting screw
3. Nut
4. Holes used for setting Groomer HOC
5. Hole not used

3. Measure the distance between the bottom of the screw head and the face of the bar to get the height-of-cut.
4. Hook the screw head on cutting edge of bedknife and rest rear end of bar on rear roller (Figure 17).
5. Rotate the adjusting screw until the front roller contacts the gauge bar (Figure 17).

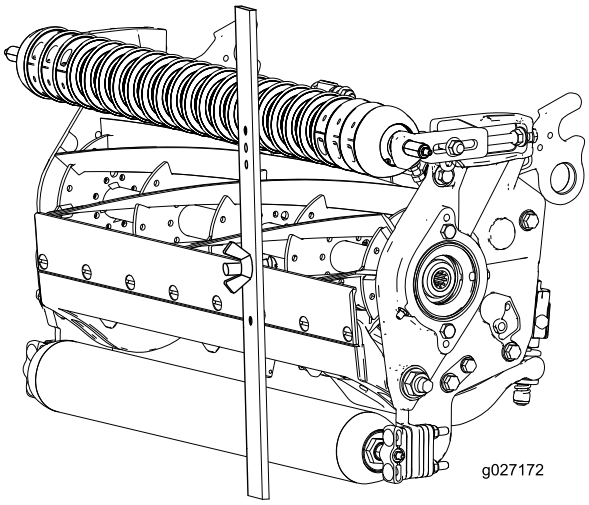

Figure 17

6. Adjust both ends of roller until entire roller is parallel to the bedknife.

   Important: When set properly, the rear and front rollers will contact the gauge bar and the screw will be snug against the bedknife. This ensures that the height-of-cut is identical at both ends of the bedknife.

7. Tighten the nuts to secure the adjustment.

   Note: Do not overtighten the nuts. Tighten enough to remove play from the washer.

Use the following chart to determine which bedknife is best suited for the desired height of cut.

Bedknife/Height-of-Cut Chart		
Bedknife	**Bedknife Lip Height**	**Height of Cut**
EdgeMax® Low HOC (model 03637)	5.6 mm (0.220 inch)	6.4-12.7 mm (0.250-0.500 inch)
Low HOC (Optional)	5.6 mm (0.220 inch)	6.4-12.7 mm (0.250-0.500 inch)
Extended EdgeMax® Low HOC (Optional)	5.6 mm (0.220 inch)	6.4-12.7 mm (0.250-0.500 inch)
Extended Low HOC (Optional)	5.6 mm (0.220 inch)	6.4-12.7 mm (0.250-0.500 inch)
EdgeMax® (model 03636)	6.9 mm (0.270 inch)	9.5-38.1 mm (0.375-1.50 inch)*
Standard (Optional)	6.9 mm (0.270 inch)	9.5-38.1 mm (0.375-1.50 inch)*
Heavy Duty (Optional)	9.3 mm (0.370 inch)	12.7-38.1 mm (0.500-1.50 inch)
* Warm season grasses may require the Low HOC bedknife for 12.7 mm (0.500 inches) and below.		

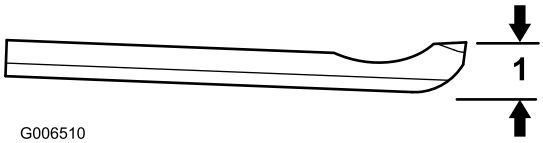

Figure 18

1. Bedknife Lip Height

Adjusting the Turf Compensation Settings

The turf compensation spring transfers the weight from the front to the rear roller. (This helps to reduce a wave pattern in the turf, also known as marcelling or bobbing.)

Important: Make spring adjustments with the cutting unit mounted to the traction unit, pointing straight ahead and lowered to the shop floor.

1. Make sure that the hairpin cotter is installed in the rear hole in the spring rod (Figure 19).

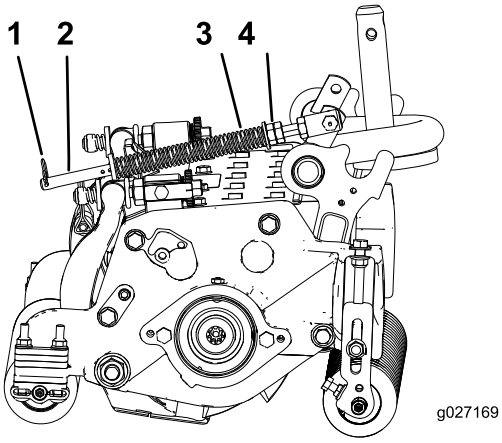

Figure 19

1. Turf compensation spring
2. Hair pin cotter
3. Spring rod
4. Hex nuts

2. Tighten the hex nuts on the front end of the spring rod until the compressed length of the spring is 15.9 cm (6.25 inches) (Figure 19).

   Note: When operating the machine on rough terrain, decrease the spring length by 12.7 mm (1/2 inch).

   Note: The turf compensation setting will need to be reset if the HOC setting or the aggressiveness-of-cut setting is changed.

Checking and Adjusting the Cutting Unit

The dual knob bedknife-to-reel adjustment system incorporated in this cutting unit simplifies the adjustment procedure needed to deliver optimum mowing performance. The precise adjustment possible with the dual knob/bedbar design gives the necessary control to provide a continual self-sharpening action-thus maintaining sharp cutting edges, ensuring good quality-of-cut, and greatly reducing the need for routine back lapping.

Prior to mowing each day, or as required, each cutting unit must be checked to verify proper bedknife-to-reel contact. **This must be performed even though quality of cut is acceptable.**

1. Lower the cutting units onto a hard surface, shut off the engine, and remove the ignition key.
2. Slowly rotate the reel in a reverse direction, listening for reel-to-bedknife contact.

If no contact is evident, turn the bedknife adjusting knobs clockwise, one click at a time, until light contact is felt and heard.

The reel must cut one sheet of paper, when inserted at a right angle to the bedknife, at both ends and at the center of the reel; refer to step 12 and Figure 10 in Adjusting the Bedknife to the Reel (page 7)

The adjustment knobs have detentes corresponding to 0.022 mm (0.0009 inch) bedknife movement for each indexed position.

If excessive contact/reel drag is evident it will be either necessary to backlap, reface the front of the bedknife, or regrind the cutting unit to achieve the sharp edges needed for precision cutting (Refer to the Toro Manual for Sharpening Reel and Rotary Mowers).

Light contact is preferred at all times. If light contact is not maintained, the bedknife/reel edges will not sufficiently self-sharpen and dull cutting edges will result after a period of operation. If excessive contact is maintained, bedknife/reel wear will be accelerated, uneven wear can result, and quality of cut may be adversely affected.

As the reel blades continue to run against the bedknife, a slight burr will appear on the front cutting edge surface along the full length of the bedknife. You can remove burrs and improve cutting by occasionally running a file across the front edge.

After extended running, a ridge will eventually develop at both ends of the bedknife. These notches must be rounded off or filed flush with the cutting edge of the bedknife to ensure smooth operation.

Over time, the chamfer (Figure 20) will need to be reground as it is only designed to last 40% of the bedknife life.

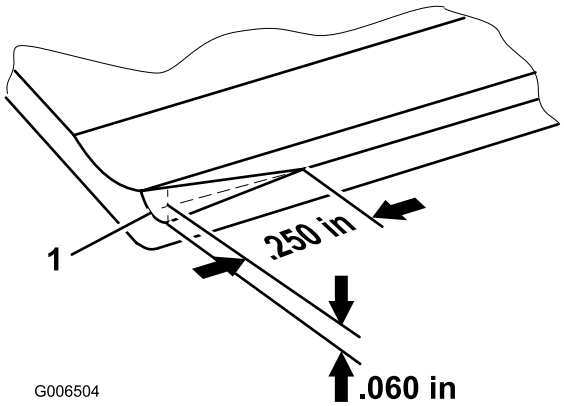

Figure 20

1. Lead-in chamfer on right end of bedknife

Do not make lead-in chamfer too large as it may cause turf tufting.

Servicing the Bedknife

The bedknife service limits are listed in the following charts.

Important: Operating the cutting unit with the bedknife below the service limit may result in poor after-cut appearance and reduce the structural integrity of the bedknife for impacts.

Bedknife Service Limit Chart				
Bedknife	**Part No.**	**Bedknife Lip Height ***	**Service Limit ***	**Grind Angles** Top/Front Angles
EdgeMax® Low HOC (model 03637)	127–7132	5.6 mm (0.220 inch)	6.4-12.7 mm (0.250-0.500 inch)	10/5 Degrees
Low HOC (Optional)	110-4084	5.6 mm (0.220 inch)	4.8 mm (0.190 inch)	10/5 Degrees
Extended EdgeMax® Low HOC (Optional)	119–4280	5.6 mm (0.220 inch)	4.8 mm (0.190 inch)	10/10 Degrees
Extended Low HOC (Optional)	120–1640	5.6 mm (0.220 inch)	4.8 mm (0.190 inch)	10/10 Degrees
EdgeMax® (model 03636)	108-9095	6.9 mm (0.270 inch)	4.8 mm (0.190 inch)	10/5 Degrees
Standard (Optional)	108-9096	6.9 mm (0.270 inch)	4.8 mm (0.190 inch)	10/5 Degrees
Heavy Duty (Optional)	110-4074	9.3 mm (0.370 inch)	4.8 mm (0.190 inch)	10/5 Degrees

Recommended Top and Front Bedknife Grind Angles (Figure 21)

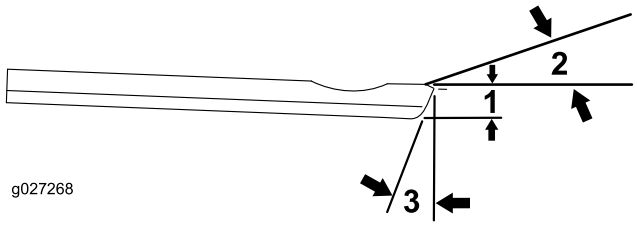

Figure 21

1. Bedknife service limit *
2. Top grind angle
3. Front grind angle

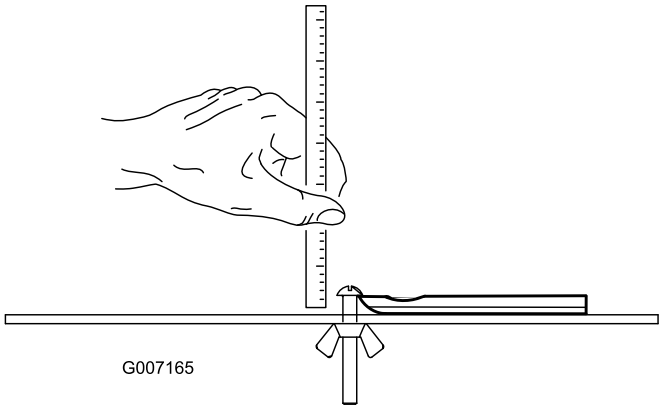

Figure 22

Note: All bedknife service limit measurements reference the bottom of the bedknife (Figure 22)

Maintenance

Lubrication

Each cutting unit has 5 grease fittings (Figure 23) that must be lubricated regularly with No. 2 general-purpose lithium-base grease.

There are 2 lubrication points on the front roller, rear roller, and 1 at the reel motor spline.

Note: Lubricating cutting units immediately after washing helps purge water out of bearings and increases bearing life.

1. Wipe each grease fitting with a clean rag.
2. Apply grease until clean grease is seen coming out of roller seals and bearing relief valve.
3. Wipe excess grease away.

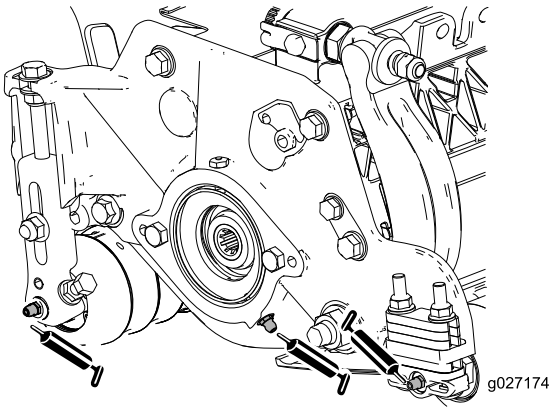

Figure 23

Grease fitting locations on the reel motor side.

Servicing the Bedbar

Removing the Bedbar

1. Turn bedbar adjuster screws counterclockwise to back the bedknife away from the reel (Figure 24).

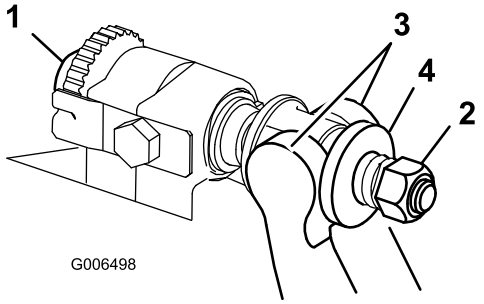

Figure 24

1. Bedbar adjusting screw
2. Spring tension nut
3. Bedbar
4. Washer

2. Back out the spring tension nut, until the washer is no longer tensioned against the bedbar (Figure 24).
3. On each side of the machine, loosen the locknut securing the bedbar bolt (Figure 25).

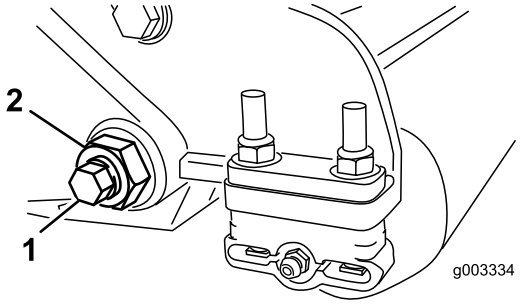

Figure 25

1. Bedbar bolt
2. Locknut

4. Remove each bedbar bolt allowing bedbar to be pulled downward and removed from machine bolt (Figure 25).

   Note: Account for the 2 nylon and 1 stamped steel washers on each end of bedbar (Figure 26).

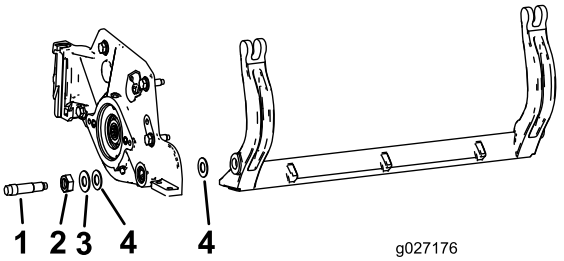

Figure 26

1. Bedbar bolt
2. Nut
3. Steel washer
4. Nylon washer

Assembling the Bedbar

1. Install the bedbar, positioning the mounting ears between the washer and bedbar adjuster.
2. Secure the bedbar to each side plate with the bedbar bolts (nuts on bolts) and the 6 washers.

   Note: Position a nylon washer on each side of the side plate boss. Place a steel washer outside each of the nylon washers (Figure 26).
3. Torque bedbar bolts to 37-45 N-m (27–33 in-lbs).

   Note: Tighten the locknuts until the outside steel washer stops rotating and the end play is removed but, do not overtighten or deflect the side plates. Washers on the inside may have a gap.
4. Tighten the spring tension nut until the spring is collapsed, then back off 1/2 turn (Figure 27).

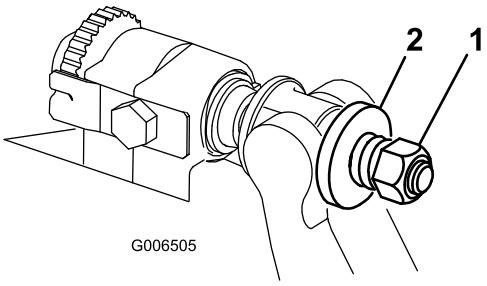

Figure 27

1. Spring tension nut
2. Spring

Servicing the HD Dual Point Adjusters (DPA)

1. Remove all parts (refer to the *Installation Instructions* for the HD DPA Kit and to Figure 28).
2. Apply Never Seize to the inside of the bushing area on cutting unit center frame (Figure 28).
3. Align the keys on flange bushings to the slots in the frame and install the bushings (Figure 28).
4. Install a wave washer onto the adjuster shaft and slide the adjuster shaft into the flange bushings in the cutting unit frame (Figure 28).
5. Secure the adjuster shaft with a flat washer and locknut (Figure 28).
6. Torque the lock nut to 20 to 27 N-m (15 to 20 ft-lb).

   Note: The bedbar adjuster shaft has left-hand threads.

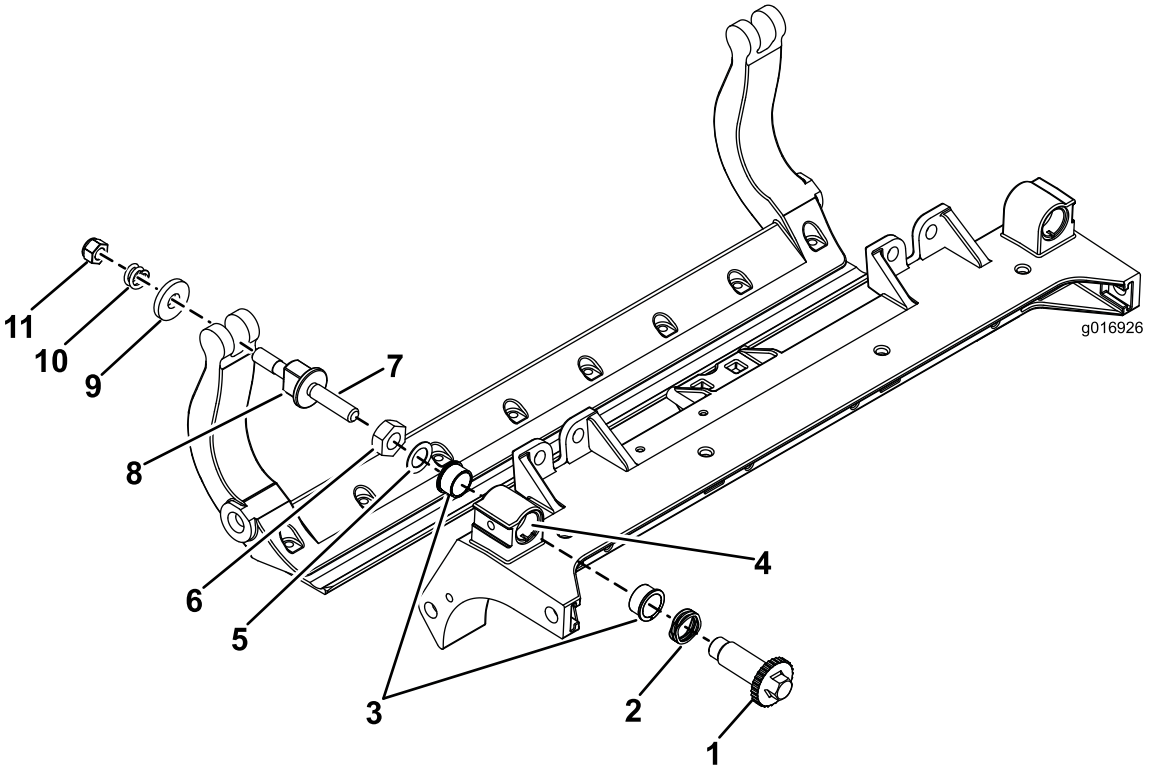

Figure 28

1. Shaft adjuster
2. Wave washer
3. Flange bushing
4. Apply Never Seize here.
5. Flat washer
6. Locknut
7. Apply Never Seize here.
8. Bedbar adjuster screw
9. Hardened washer
10. Compression spring
11. Spring tension nut

7. Apply Never Seize lubricant to the threads of the bedbar adjuster screw that fit into the adjuster shaft.
8. Thread the bedbar adjuster screw into the adjuster shaft.
9. Loosely install the hardened washer, spring, and spring tension nut onto the adjuster screw.
10. Install the bedbar, positioning the mounting ears between the washer and the bedbar adjuster.
11. Secure the bedbar to each side plate with the bedbar bolts (nuts on bolts) and 6 washers.

    Note: Position a nylon washer on each side of the side plate boss.
12. Place a steel washer outside each of the nylon washers (Figure 28).
13. Torque the bedbar bolts to 27–36 N-m (240-320 ft.-lb).
14. Tighten the locknuts until the outside steel washer stops rotating and end play is removed but do not overtighten or deflect the side plates.

    Note: Washers on the inside may have a gap (Figure 28).
15. Tighten the nut on each bedbar adjuster assembly until the compression spring is fully compressed, then loosen the nut 1/2 turn (Figure 28).
16. Repeat this procedure on the other end of the cutting unit.
17. Adjust the bedknife to the reel; refer to Adjusting the Bedknife to the Reel (page 7).

Servicing the Roller

The roller Rebuild Kit and the Roller Rebuild Tool Kit (Figure 29) are available for servicing the roller. The Roller Rebuild Kit includes all the bearings, bearing nuts, inner seals and outer seals to rebuild a roller. The Roller Rebuild Tool Kit includes all the tools and the installation instructions required to rebuild a roller with the roller rebuild kit. Refer to your *Part's Catalog* or contact your Authorized Distributor for assistance.

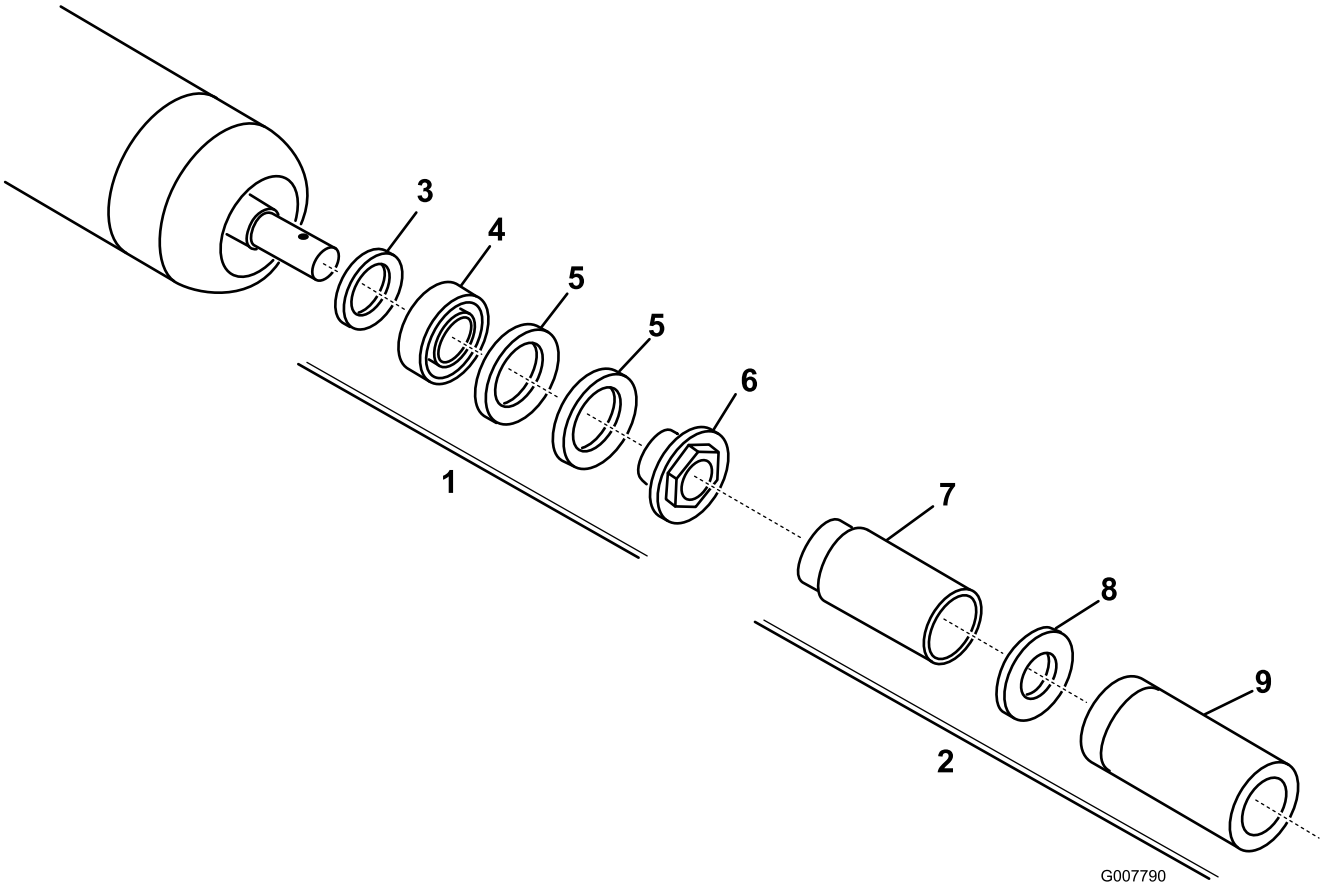

Figure 29

1. Roller Rebuild Kit (Part No. 114–5430)
2. Roller Rebuild Tool Kit (Part No. 115–0803)
3. Inner seal
4. Bearing
5. Outer seal
6. Bearing nut
7. Inner seal tool
8. Washer
9. Bearing/outer seal tool

Notes:

Notes:

Notes:

Declaration of Incorporation

The Toro Company, 8111 Lyndale Ave. South, Bloomington, MN, USA declares that the following unit(s) conform(s) to the directives listed, when installed in accordance with the accompanying instructions onto certain Toro models as indicated on the relevant Declarations of Conformity.

Model No.	Serial No.	Product Description	Invoice Description	General Description	Directive
03636	315000001 and Up	8-Blade DPA Cutting Unit with 7in Reel, Reelmaster 5010-H Series Traction Unitl	22IN 7-IN 8-BLD DPA CU [5010 HYBRID]	8-Blade DPA Cutting Unit (R)	2006/42/EC
03637	315000001 and Up	11-Blade DPA Cutting Unit with 7in Reel, Reelmaster 5010-H Series Traction Unit	22IN 7-IN 11-BLD DPA CU [5010 HYBRID]	11-Blade DPA Cutting Unit (R)	2006/42/EC

Relevant technical documentation has been compiled as required per Part B of Annex VII of 2006/42/EC.

We will undertake to transmit, in response to requests by national authorities, relevant information on this partly completed machinery. The method of transmission shall be electronic transmittal.

This machinery shall not be put into service until incorporated into approved Toro models as indicated on the associated Declaration of Conformity and in accordance with all instructions, whereby it can be declared in conformity with all relevant Directives.

Certified:

David S. Klis

David Klis
Sr. Engineering Manager
8111 Lyndale Ave. South
Bloomington, MN 55420, USA
August 28, 2014

EU Technical Contact:

Peter Tetteroo
Toro Europe NV
B-2260 Oevel-Westerloo
Belgium

Tel. 0032 14 562960
Fax 0032 14 581911

International Distributor List

Distributor:	Country:	Phone Number:	Distributor:	Country:	Phone Number:
Agrolanc Kft	Hungary	36 27 539 640	Maquiver S.A.	Colombia	57 1 236 4079
Balama Prima Engineering Equip.	Hong Kong	852 2155 2163	Maruyama Mfg. Co. Inc.	Japan	81 3 3252 2285
B-Ray Corporation	Korea	82 32 551 2076	Mountfield a.s.	Czech Republic	420 255 704 220
Casco Sales Company	Puerto Rico	787 788 8383	Mountfield a.s.	Slovakia	420 255 704 220
Ceres S.A.	Costa Rica	506 239 1138	Munditol S.A.	Argentina	54 11 4 821 9999
CSSC Turf Equipment (pvt) Ltd.	Sri Lanka	94 11 2746100	Norma Garden	Russia	7 495 411 61 20
Cyril Johnston & Co.	Northern Ireland	44 2890 813 121	Oslinger Turf Equipment SA	Ecuador	593 4 239 6970
Cyril Johnston & Co.	Republic of Ireland	44 2890 813 121	Oy Hako Ground and Garden Ab	Finland	358 987 00733
Equiver	Mexico	52 55 539 95444	Parkland Products Ltd.	New Zealand	64 3 34 93760
Femco S.A.	Guatemala	502 442 3277	Perfetto	Poland	48 61 8 208 416
ForGarder OU	Estonia	372 384 6060	Pratoverde SRL.	Italy	39 049 9128 128
G.Y.K. Company Ltd.	Japan	81 726 325 861	Prochaska & Cie	Austria	43 1 278 5100
Geomechaniki of Athens	Greece	30 10 935 0054	RT Cohen 2004 Ltd.	Israel	972 986 17979
Golf international Turizm	Turkey	90 216 336 5993	Riversa	Spain	34 9 52 83 7500
Guandong Golden Star	China	86 20 876 51338	Lely Turfcare	Denmark	45 66 109 200
Hako Ground and Garden	Sweden	46 35 10 0000	Solvert S.A.S.	France	33 1 30 81 77 00
Hako Ground and Garden	Norway	47 22 90 7760	Spypros Stavrinides Limited	Cyprus	357 22 434131
Hayter Limited (U.K.)	United Kingdom	44 1279 723 444	Surge Systems India Limited	India	91 1 292299901
Hydroturf Int. Co Dubai	United Arab Emirates	97 14 347 9479	T-Markt Logistics Ltd.	Hungary	36 26 525 500
Hydroturf Egypt LLC	Egypt	202 519 4308	Toro Australia	Australia	61 3 9580 7355
Irrimac	Portugal	351 21 238 8260	Toro Europe NV	Belgium	32 14 562 960
Irrigation Products Int'l Pvt Ltd.	India	0091 44 2449 4387	Valtech	Morocco	212 5 3766 3636
Jean Heybroek b.v.	Netherlands	31 30 639 4611	Victus Emak	Poland	48 61 823 8369

European Privacy Notice

The Information Toro Collects
Toro Warranty Company (Toro) respects your privacy. In order to process your warranty claim and contact you in the event of a product recall, we ask you to share certain personal information with us, either directly or through your local Toro company or dealer.

The Toro warranty system is hosted on servers located within the United States where privacy law may not provide the same protection as applies in your country.

BY SHARING YOUR PERSONAL INFORMATION WITH US, YOU ARE CONSENTING TO THE PROCESSING OF YOUR PERSONAL INFORMATION AS DESCRIBED IN THIS PRIVACY NOTICE.

The Way Toro Uses Information
Toro may use your personal information to process warranty claims, to contact you in the event of a product recall and for any other purpose which we tell you about. Toro may share your information with Toro's affiliates, dealers or other business partners in connection with any of these activities. We will not sell your personal information to any other company. We reserve the right to disclose personal information in order to comply with applicable laws and with requests by the appropriate authorities, to operate our systems properly or for our own protection or that of other users.

Retention of your Personal Information
We will keep your personal information as long as we need it for the purposes for which it was originally collected or for other legitimate purposes (such as regulatory compliance), or as required by applicable law.

Toro's Commitment to Security of Your Personal Information
We take reasonable precautions in order to protect the security of your personal information. We also take steps to maintain the accuracy and current status of personal information.

Access and Correction of your Personal Information
If you would like to review or correct your personal information, please contact us by email at legal@toro.com.

Australian Consumer Law

Australian customers will find details relating to the Australian Consumer Law either inside the box or at your local Toro Dealer.

Toro General Commercial Product Warranty

A Two-Year Limited Warranty

Conditions and Products Covered

The Toro Company and its affiliate, Toro Warranty Company, pursuant to an agreement between them, jointly warrant your Toro Commercial product ("Product") to be free from defects in materials or workmanship for two years or 1500 operational hours*, whichever occurs first. This warranty is applicable to all products with the exception of Aerators (refer to separate warranty statements for these products). Where a warrantable condition exists, we will repair the Product at no cost to you including diagnostics, labor, parts, and transportation. This warranty begins on the date the Product is delivered to the original retail purchaser.
* Product equipped with an hour meter.

Instructions for Obtaining Warranty Service

You are responsible for notifying the Commercial Products Distributor or Authorized Commercial Products Dealer from whom you purchased the Product as soon as you believe a warrantable condition exists. If you need help locating a Commercial Products Distributor or Authorized Dealer, or if you have questions regarding your warranty rights or responsibilities, you may contact us at:

Toro Commercial Products Service Department
Toro Warranty Company
8111 Lyndale Avenue South
Bloomington, MN 55420-1196

952–888–8801 or 800–952–2740
E-mail: commercial.warranty@toro.com

Owner Responsibilities

As the Product owner, you are responsible for required maintenance and adjustments stated in your *Operator's Manual*. Failure to perform required maintenance and adjustments can be grounds for disallowing a warranty claim.

Items and Conditions Not Covered

Not all product failures or malfunctions that occur during the warranty period are defects in materials or workmanship. This warranty does not cover the following:

- Product failures which result from the use of non-Toro replacement parts, or from installation and use of add-on, or modified non-Toro branded accessories and products. A separate warranty may be provided by the manufacturer of these items.
- Product failures which result from failure to perform recommended maintenance and/or adjustments. Failure to properly maintain your Toro product per the Recommended Maintenance listed in the *Operator's Manual* can result in claims for warranty being denied.
- Product failures which result from operating the Product in an abusive, negligent, or reckless manner.
- Parts subject to consumption through use unless found to be defective. Examples of parts which are consumed, or used up, during normal Product operation include, but are not limited to, brake pads and linings, clutch linings, blades, reels, rollers and bearings (sealed or greasable), bed knives, spark plugs, castor wheels and bearings, tires, filters, belts, and certain sprayer components such as diaphragms, nozzles, and check valves, etc.
- Failures caused by outside influence. Conditions considered to be outside influence include, but are not limited to, weather, storage practices, contamination, use of unapproved fuels, coolants, lubricants, additives, fertilizers, water, or chemicals, etc.
- Failure or performance issues due to the use of fuels (e.g. gasoline, diesel, or biodiesel) that do not conform to their respective industry standards.
- Normal noise, vibration, wear and tear, and deterioration.
- Normal "wear and tear" includes, but is not limited to, damage to seats due to wear or abrasion, worn painted surfaces, scratched decals or windows, etc.

Parts

Parts scheduled for replacement as required maintenance are warranted for the period of time up to the scheduled replacement time for that part. Parts replaced under this warranty are covered for the duration of the original product warranty and become the property of Toro. Toro will make the final decision whether to repair any existing part or assembly or replace it. Toro may use remanufactured parts for warranty repairs.

Deep Cycle and Lithium-Ion Battery Warranty:

Deep cycle and Lithium-Ion batteries have a specified total number of kilowatt-hours they can deliver during their lifetime. Operating, recharging, and maintenance techniques can extend or reduce total battery life. As the batteries in this product are consumed, the amount of useful work between charging intervals will slowly decrease until the battery is completely worn out. Replacement of worn out batteries, due to normal consumption, is the responsibility of the product owner. Battery replacement may be required during the normal product warranty period at owner's expense. Note: (Lithium-Ion battery only): A Lithium-Ion battery has a part only prorated warranty beginning year 3 through year 5 based on the time in service and kilowatt hours used. Refer to the *Operator's Manual* for additional information.

Maintenance is at Owner's Expense

Engine tune-up, lubrication, cleaning and polishing, replacement of filters, coolant, and completing recommended maintenance are some of the normal services Toro products require that are at the owner's expense.

General Conditions

Repair by an Authorized Toro Distributor or Dealer is your sole remedy under this warranty.

Neither The Toro Company nor Toro Warranty Company is liable for indirect, incidental or consequential damages in connection with the use of the Toro Products covered by this warranty, including any cost or expense of providing substitute equipment or service during reasonable periods of malfunction or non-use pending completion of repairs under this warranty. Except for the Emissions warranty referenced below, if applicable, there is no other express warranty. All implied warranties of merchantability and fitness for use are limited to the duration of this express warranty.

Some states do not allow exclusions of incidental or consequential damages, or limitations on how long an implied warranty lasts, so the above exclusions and limitations may not apply to you. This warranty gives you specific legal rights, and you may also have other rights which vary from state to state.

Note regarding engine warranty:

The Emissions Control System on your Product may be covered by a separate warranty meeting requirements established by the U.S. Environmental Protection Agency (EPA) and/or the California Air Resources Board (CARB). The hour limitations set forth above do not apply to the Emissions Control System Warranty. Refer to the Engine Emission Control Warranty Statement supplied with your product or contained in the engine manufacturer's documentation for details

Countries Other than the United States or Canada

Customers who have purchased Toro products exported from the United States or Canada should contact their Toro Distributor (Dealer) to obtain guarantee policies for your country, province, or state. If for any reason you are dissatisfied with your Distributor's service or have difficulty obtaining guarantee information, contact the Toro importer.

374-0253 Rev C