Form No. 3392-675 Rev A

36cm Electric Lawn Mower

Model No. 21136—Serial No. 315000001 and Up

Model No. 21141—Serial No. 315000001 and Up

Operator's Manual

Safety

Read and understand the contents of this manual before starting the motor.

This is the safety alert symbol. It is used to alert you to potential personal injury hazards. Obey all safety messages that follow this symbol to avoid possible injury or death.

Improperly using or maintaining this machine could result in injury or death. To reduce this potential, comply with the following safety instructions.

⚠ WARNING

To reduce the risk of fire, electric shock, and personal injury when using this electric machine, always follow these safety instructions.

The following safety information has been adapted from European Standard EN 60335-2-77.

Safe Operating Practices

General Information

- Read the instructions carefully. Be familiar with the controls and the proper use of the machine.
- Never allow children or people unfamiliar with these instructions to use the machine. Local regulations can restrict the age of the operator.
- Never mow while people, especially children or pets, are nearby.
- The operator or user is responsible for accidents or hazards occurring to other people or their property.

Preparation

- While mowing, always wear substantial footwear and long trousers. Do not operate the machine when barefoot or wearing open sandals.
- Thoroughly inspect the area where the machine is to be used, and remove all objects which can be thrown by the machine.
- Before using, always visually inspect to see that the blade, blade bolts, and cutter assembly are not worn or damaged. Replace a worn or damaged blade and bolts as a set to preserve balance.
- Toro recommends that the machine be supplied with a residual current device (RCD) having a tripping current that does not exceed 30 mA.
- Use only a 1.00 mm^2 size extension cord that is not longer than 30 m and is suitable for outdoor use (if applicable).
- Regularly inspect the power cords for signs of damage or aging. Replace them immediately if they are defective.
- Do not use the machine if any power cord is damaged or worn.
- Do not connect a damaged extension cord to the mains supply or touch a damaged cord before it is disconnected from the mains supply. A damaged cord can lead to contact with live parts.

Handling

- Mow only in daylight or in good artificial light.
- Avoid operating the equipment in wet grass, where feasible.
- Always be sure of your footing on slopes.
- Walk; never run.
- For wheeled rotary mowers, mow across the face of slopes, never up and down.
- Exercise extreme caution when changing direction on slopes.
- Do not mow excessively steep slopes.
- Use extreme caution when reversing or pulling the machine toward you.
- Switch off the machine when transporting it from 1 cutting area to another. Stop the blade whenever you move the machine off the lawn.
- Never operate the machine with defective guards or without mounted safety devices (for example, deflectors and/or grass catchers) in place.
- Switch on the motor carefully according to instructions and with feet well away from the blade.
- Do not put hands or feet near or under rotating parts. Keep clear of the discharge opening at all times.
- Never pick up or carry a machine while the motor is running.
- Pull the plug from the socket:

© 2014—The Toro® Company
8111 Lyndale Avenue South
Bloomington, MN 55420

Register at www.Toro.com.

CE

Original Instructions (EN)
Printed in the UK
All Rights Reserved

3392-675 A

- whenever you leave the machine;
- before clearing a blockage or removing material from the chute;
- before checking, cleaning, or working on the machine;
- after striking a foreign object. Inspect the machine for damage and make repairs before starting and operating the machine;
- if the machine starts to vibrate abnormally (check immediately).

- If the extension cord becomes damaged during use, stop the machine, remove plug from the mains supply, and replace the damaged extension cord.
- Do not touch the blades before the machine is disconnected from the mains supply and the blades have come to a complete stop.
- Keep the extension cord away from the blades. The blades can cause damage to the extension cord and lead to contact with live parts.

Maintenance and Storage

- Keep all nuts, bolts, and screws tight to be sure that the equipment is in safe working condition.
- Check the grass catcher frequently for wear or deterioration.
- Replace worn or damaged parts for safety.
- Ensure that only the proper replacement cutting blade is used.
- Purchase only genuine Toro replacement parts and accessories.

Sound Pressure (Model 21136)

This machine has a sound pressure level at the operator's ear of 80 dBA, which includes an Uncertainty Value (K) of 3 dBA.

The sound pressure level was determined according to the procedures outlined in EN 60335-2-77.

Sound Power (Model 21136)

This machine has a guaranteed sound power level of 85 dBA, which includes an Uncertainty Value (K) of 2 dBA.

The sound power level was determined according to the procedures outlined in ISO 11094.

⚠ CAUTION

Long-term exposure to noise while operating the machine may cause some hearing loss.

Wear adequate hearing protection whenever you operate the machine for an extended period of time.

Vibration, Hand/arm (Model 21136)

Measured vibration level for right hand = 2.4 m/s^2

Measured vibration level for left hand = 3.2 m/s^2

Uncertainty Value (K) = 1.6 m/s^2

Measured values were determined according to the procedures outlined in EN 60335-2-77.

⚠ CAUTION

Long-term exposure to vibration while operating the machine may cause some numbness in the hands and wrists.

Wear gloves that dampen the vibration whenever you operate the machine for an extended period of time.

Sound Pressure (Model 21141)

This machine has a sound pressure level at the operator's ear of 83 dBA, which includes an Uncertainty Value (K) of 2 dBA.

The sound pressure level was determined according to the procedures outlined in EN 60335-2-77.

Sound Power (Model 21141)

This machine has a guaranteed sound power level of 90 dBA, which includes an Uncertainty Value (K) of 2 dBA.

The sound power level was determined according to the procedures outlined in ISO 11094.

⚠ CAUTION

Long-term exposure to noise while operating the machine may cause some hearing loss.

Wear adequate hearing protection whenever you operate the machine for an extended period of time.

Vibration, Hand/arm (Model 21141)

Measured vibration level for right hand = 1.0 m/s^2

Measured vibration level for left hand = 0.8 m/s^2

Uncertainty Value (K) = 0.5 m/s^2

Measured values were determined according to the procedures outlined in EN 60335-2-77.

⚠ CAUTION

Long-term exposure to vibration while operating the machine may cause some numbness in the hands and wrists.

Wear gloves that dampen the vibration whenever you operate the machine for an extended period of time.

Waste of Electrical/Electronic Equipment (WEEE)



- EU directive 2002/96/EC classifies this product as an electrical or electronic tool.
- **Do not** dispose of this tool as unsorted municipal waste.
- Dispose of this tool at a collection or recycling center according to local and national law.
- The consumer has an important role in reducing the disposal of waste by returning waste electronic/electrical tools for recycling.
- Recycling avoids the dispersion of hazardous materials into the municipal waste stream.
- The crossed-out bin symbol reminds the user not to dispose of this product as unsorted municipal waste.

Safety and Instructional Decals

Important: **Safety and instruction decals are located near areas of potential danger. Replace damaged or lost decals.**



111-4782

1. Height of cut



111–5173

1. Warning—read the *Operator's Manual.*
2. Cutting/dismemberment hazard of hand or foot, mower blade—wait for moving parts to stop.
3. Thrown object hazard—keep bystanders a safe distance from the machine.
4. Electrical shock hazard—do not operate the machine in the rain.
5. Electrical shock hazard—do not run over the electrical cable of the machine.
6. Cutting/dismemberment hazard of hand or foot, mower blade—unplug the machine before performing maintenance.

Setup

Important: **Do not connect the machine to a power source until the machine is fully assembled.**

1

Unfolding the Handle

No Parts Required

Procedure

1. Cut the cable tie around the handle and remove the cable tie and the packaging material (Model 21136 only).
2. Carefully unfold the handle, keeping the cables clear of the pivot points so that they do not get pinched.

⚠ CAUTION

The handles pass each other like a scissors while folding and unfolding them and can pinch your fingers.

Keep your fingers clear of the pivot points and crossing handles as you fold or unfold the handle.

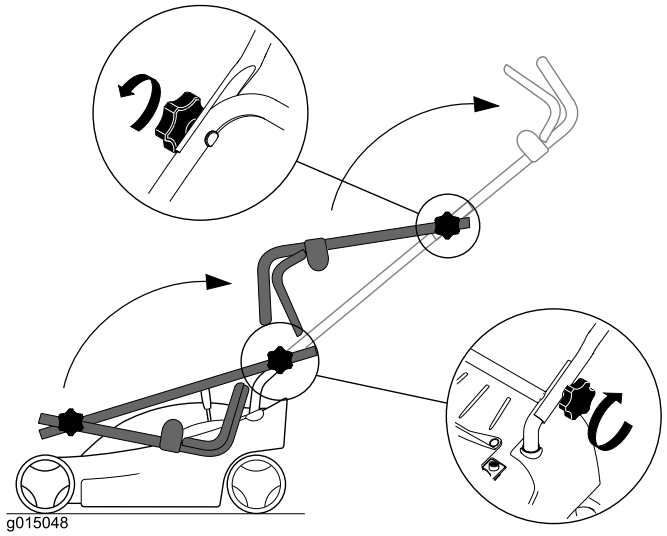

Figure 1
Model 21136

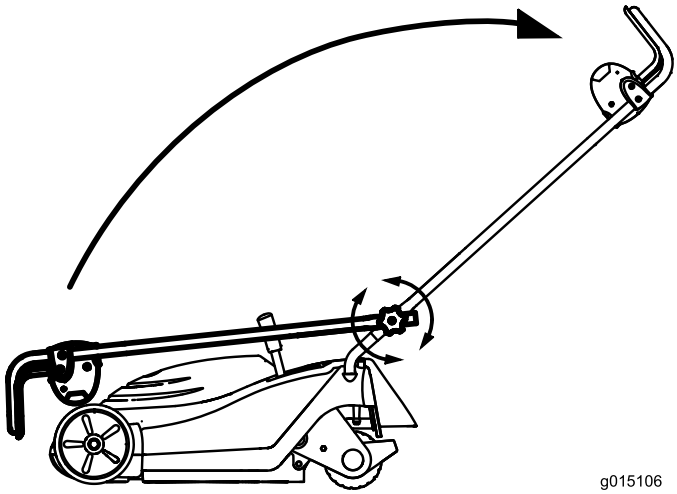

Figure 2
Model 21141

3. Tighten the knobs on the handle to secure it in place.

2

Assembling the Grass Bag

No Parts Required

Procedure

1. Slide the wire bag frame into the grass bag, ensuring that the handle is above the fabric (Figure 3).

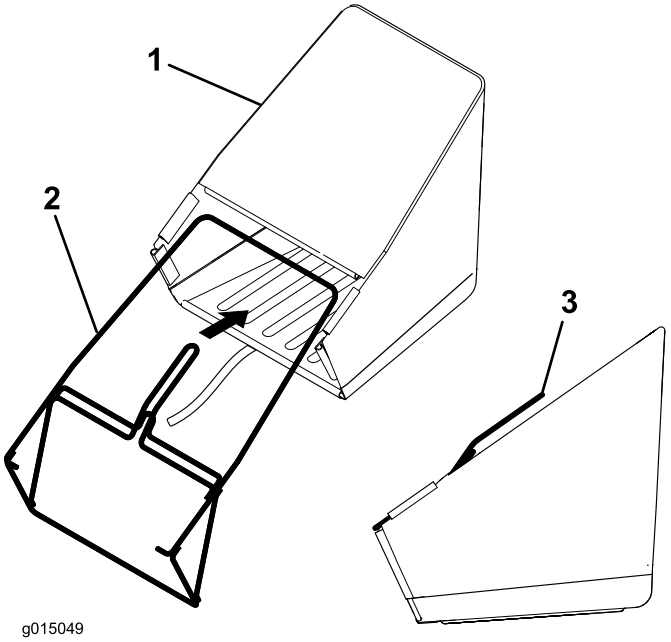

Figure 3

1. Grass bag
2. Wire frame
3. Handle

2. Starting at the handle, connect the 6 plastic clips on the grass bag to the wire frame (Figure 4).

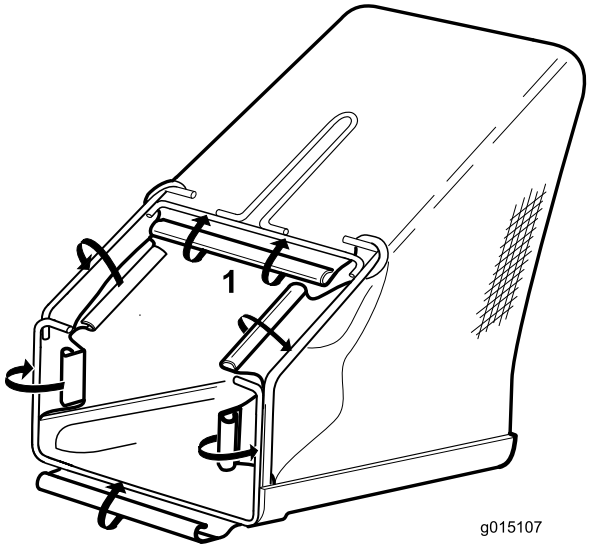

Figure 4

1. Start here and work downward.

3. Install the plastic cover onto the bag frame as shown in Figure 5.

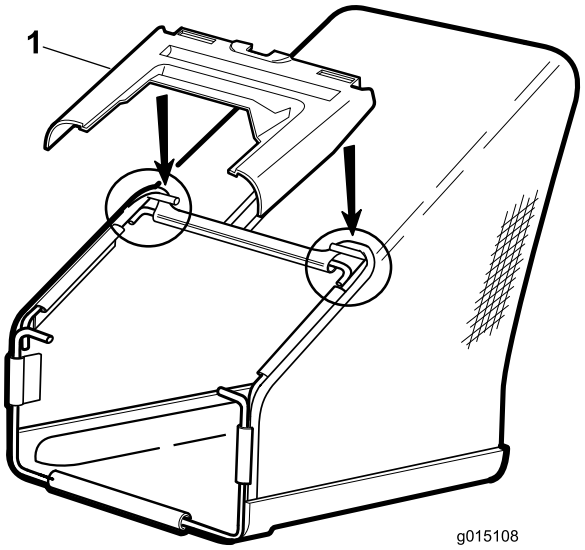

Figure 5

1. Plastic cover

Product Overview

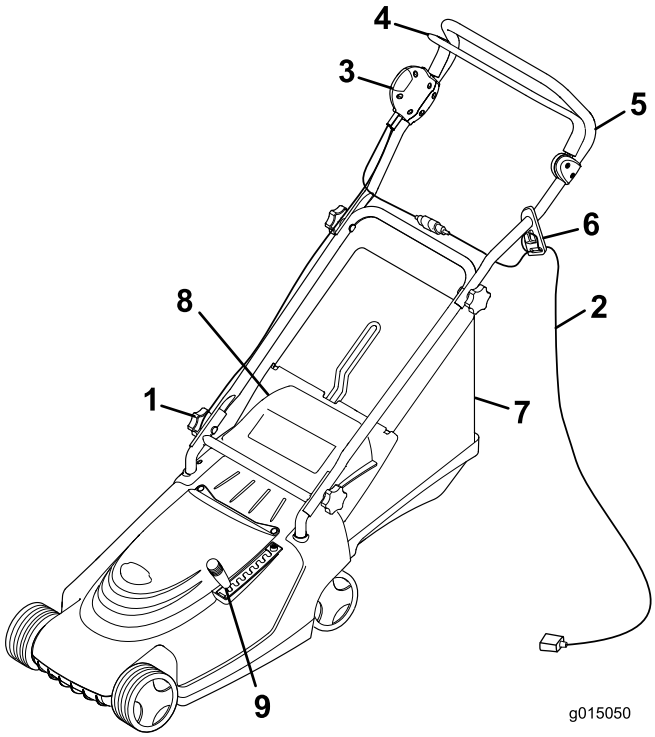

Figure 6

1. Handle knob (2)
2. Extension cord (not supplied)
3. Button
4. Control bar
5. Handle
6. Cord lock
7. Grass bag
8. Rear door
9. Height-of-cut lever

Specifications

Model	21136	21141
Weight	20.4 kg	27.4 kg
Length	136 cm	138 cm
Width	45 cm	48 cm
Height	104 cm	106 cm
Width of cut	36 cm	41 cm
Height-of-cut range (7 positions)	13 to 60 mm	13 to 65 mm
Volts and Frequency	230 V / 50 Hz	230 V / 50 Hz
Power	1.4 kW	1.5 kW

Operation

Securing the Extension Cord

Use only an extension cord recommended for outdoor, cold-weather use.

⚠ WARNING

Contacting water while operating the machine could cause an electric shock, which can cause an injury or death.

- **Don't handle the plug or the machine with wet hands or while standing in water.**
- **Use only an extension cord recommended for outdoor, cold-weather use.**

1. Form a loop in the extension cord and secure it in the cord lock (Figure 7).

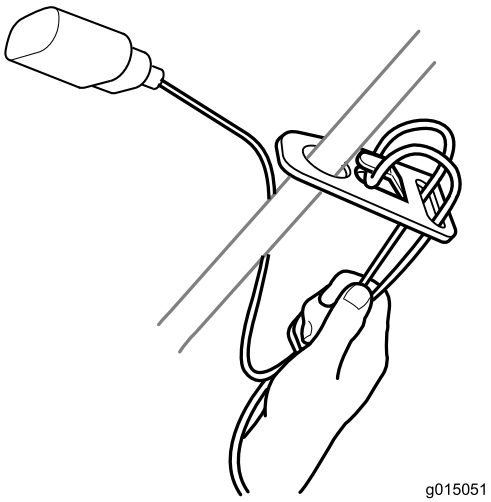

Figure 7

2. Connect the extension cord to the machine plug.

   Note: Unplug the extension cord by grasping and pulling the plug, not the cord.

⚠ WARNING

The electrical cord could be damaged, causing a shock or fire.

Thoroughly inspect the electrical cord before using the machine. If the cord is damaged, do not operate the machine. Have an Authorized Toro Service Dealer replace or repair a damaged cord immediately.

Planning Your Mowing Pattern

Following the suggested mowing pattern will reduce the risk of running over the cord with the machine, and the cord will not sustain unnecessary wear. Do not allow the power cord to wrap around trees, shrubs, or other obstacles.

Begin by mowing near the electrical power source. Mow back and forth, gradually mowing away from the power source (Figure 8).

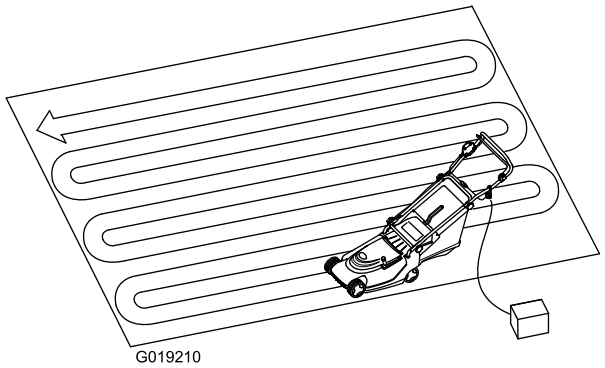

Figure 8

Starting the Motor

⚠ WARNING

Allow the motor to come to a complete stop before starting it. Failing to do this could damage the motor, making the machine unsafe.

1. Connect the extension cord to the machine (if applicable).
2. Plug the other end of the cord into a household electrical power outlet.
3. Push the button on the right side of the handle and hold it in (Figure 9).

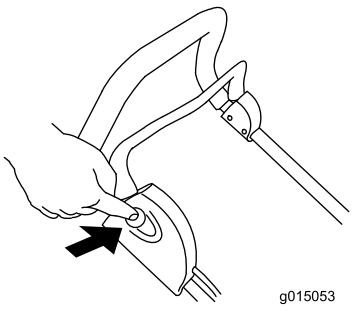

Figure 9

4. While holding in the button, pull the control bar toward the handle (Figure 10).

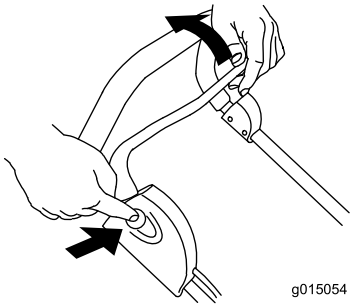

Figure 10

5. Hold the control bar to the handle and release the button (Figure 11).

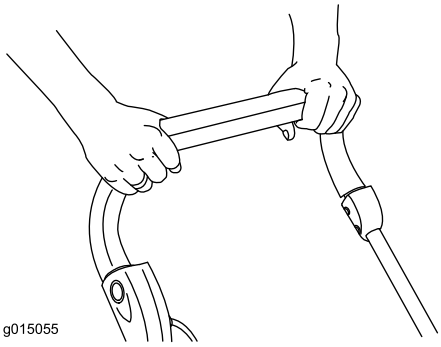

Figure 11

Stopping the Motor

1. Release the control bar (Figure 12).

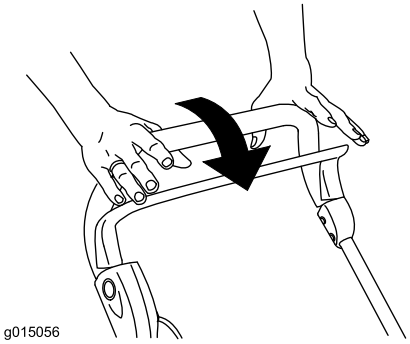

Figure 12

2. Disconnect the machine from the power source whenever you leave the machine unattended.

Adjusting the Height-of-Cut Setting

⚠ DANGER

Adjusting the height-of-cut setting could bring your hands and feet into contact with a moving blade and result in serious injury.

Stop the motor and wait for all moving parts to stop before adjusting the height-of-cut setting.

1. Stop the motor and wait for all moving parts to stop.
2. Pull the height-of-cut lever out of its position slot, and move it forward or rearward, and allow it to go into the desired slot (Figure 13).

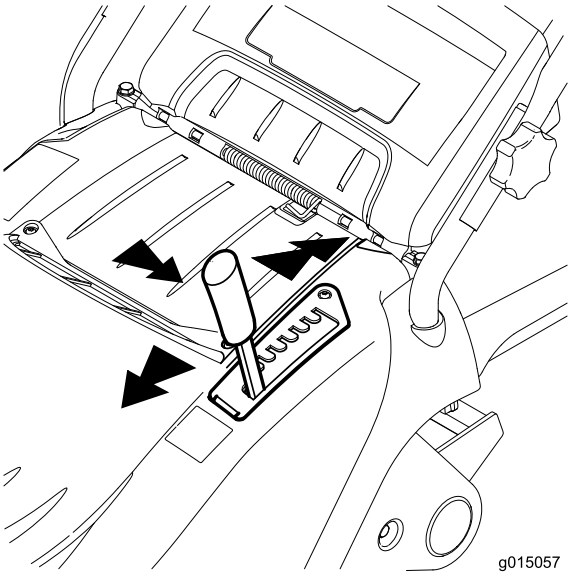

Figure 13

Bagging the Clippings

Install the grass bag to collect the clippings.

1. Lift the rear door and remove the mulch plug (Figure 14).

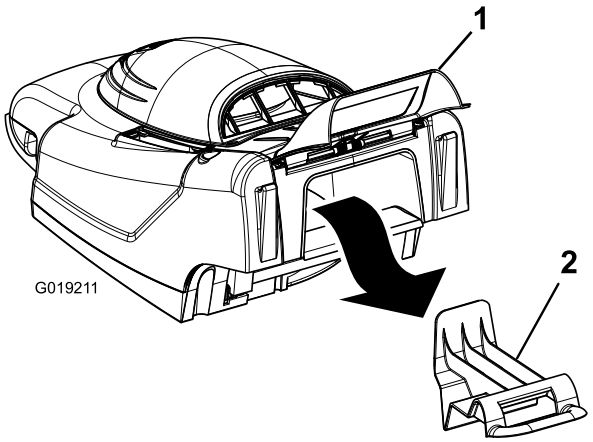

Figure 14

1. Rear door
2. Mulch plug

2. While holding up the rear door, install the grass bag onto the lugs (Figure 15).

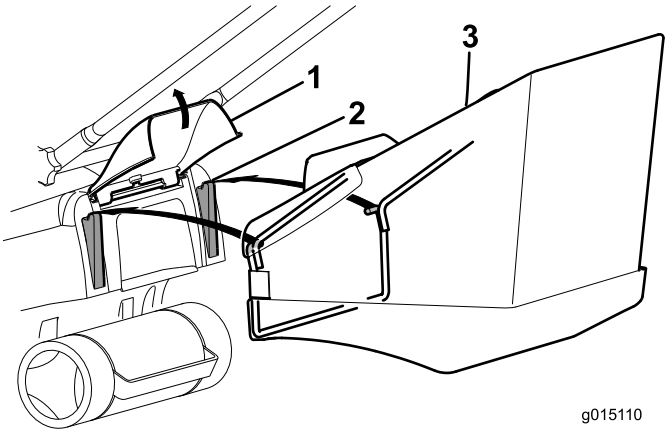

Figure 15

1. Rear door
2. Lug
3. Grass bag

3. Release the rear door.
4. Mow with the grass bag attached.
5. When the bag is full, stop the motor, remove the grass bag from the machine, and empty the contents.

Note: To convert the machine from bagging to recycling, remove the grass bag and insert the mulch plug that you removed in step 1; refer to Figure 16.

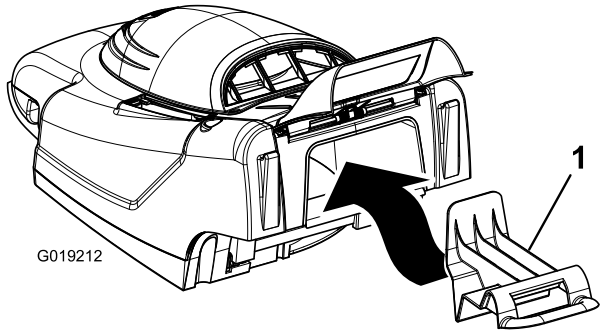

Figure 16

Model 21136 shown

1. Mulch plug

Mowing Tips

Follow these instructions when cutting grass for the best cutting results and lawn appearance.

- Maintain a **sharp blade** throughout the mowing season.
- **Mow only dry grass.** Wet grass tends to clump on the yard and may cause the machine to plug up or the motor to stall. Wet grass may also be slippery to walk on and could cause you to slip and fall.
- While cutting single swaths, ensure an overlap of about 4 cm.
- When cutting very tall grass, you may want to first mow at the highest height-of-cut setting and a slower walking speed; then mow again at a lower setting for the best lawn appearance.
- If the finished cut lawn appearance is unsatisfactory, try 1 or more of the following:
  - Sharpen the blade.
  - Walk at a slower pace while mowing.
  - Raise the height-of-cut setting on your machine.
  - Cut the grass more frequently.
  - Overlap cutting swaths instead of cutting a full swath with each pass.

Maintenance

Toro has designed this product to give you years of trouble-free use. Should the machine need service, take it to an Authorized Toro Service Dealer.

⚠ WARNING

When the machine is connected to a household power source, the machine is operational. Someone could accidentally start the machine and cause a serious injury to you or other bystanders.

Always disconnect the machine from the power source whenever you leave the machine unattended.

Double-Insulated Appliances

In a double-insulated appliance, 2 systems of insulation are provided instead of grounding. No means for grounding is provided on a double-insulated appliance, nor should a means for grounding be added to the appliance. Servicing a double-insulated appliance requires extreme care and knowledge of the system and should be done only by qualified service personnel at an Authorized Toro Service Dealer. Replacement parts for a double-insulated appliance must be identical to the parts that they replace. A double-insulated appliance is marked with the words "Double Insulation" or "Double Insulated." The symbol (square within a square) ⧈ may also be marked on the appliance.

Cleaning the Machine Housing

After each use, clean the machine housing.

Before cleaning, stop the motor, wait for all moving parts to stop, and disconnect the machine from the power source.

Important: Do not clean the machine with water. Moisture can get trapped in the machine and may cause corrosion of internal parts.

- Clean the underside of the machine housing. Remove dirt and grass clippings with a hardwood scraper or brush (Figure 17).

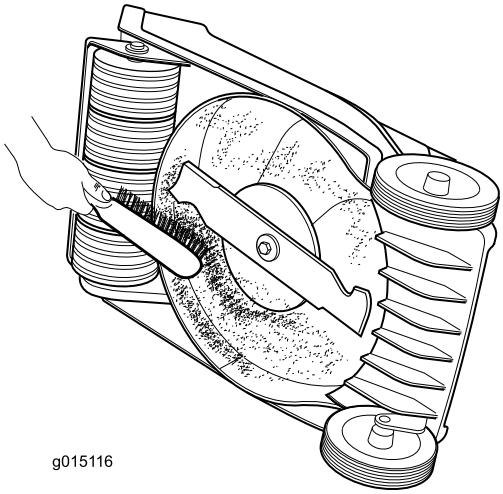

Figure 17

- Remove the debris from the housing vents along the top of the machine.
- Brush all the debris off the machine housing.
- Inspect the power plug receptacle for signs of melting or heating. Old, worn-out extension cord plugs that fit loosely in the plug receptacle can cause overheating from poor contact. Replace any damaged extension cords immediately (if applicable).

Lubricating the Machine

Lubricate the wheels, linkages, and pivot points every 25 operating hours with engine oil (Figure 18).

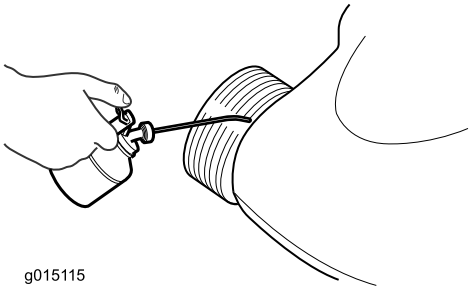

Figure 18

Servicing the Blade

Always mow with a sharp blade. A sharp blade cuts the grass evenly, without tearing or shredding the grass.

When you replace the blade, use only genuine Toro replacement blades.

⚠ WARNING

Someone could accidentally start the motor and cause a serious injury to the operator or to bystanders.

Do not attempt to inspect, remove, or replace the blade without first disconnecting the machine from the power source.

1. Stop the motor and wait for all moving parts to stop.
2. Disconnect the machine from the electrical power source.
3. Tip the machine onto its side.
4. Carefully examine the blade for sharpness and wear, especially where the flat and curved parts of the blade meet. If you notice wear, replace the blade.

   Note: For best performance, install a new blade before the mowing season begins. During the season, file down small nicks on the blade to maintain its cutting edge.

⚠ DANGER

A worn or damaged blade could break and a piece of blade could be thrown at you or bystanders, resulting in serious personal injury or death.

Inspect the blade periodically for wear or damage, and replace a worn or damaged blade.

Removing the Blade

1. Grasp the end of the blade (Figure 19) with a rag or thickly padded glove.

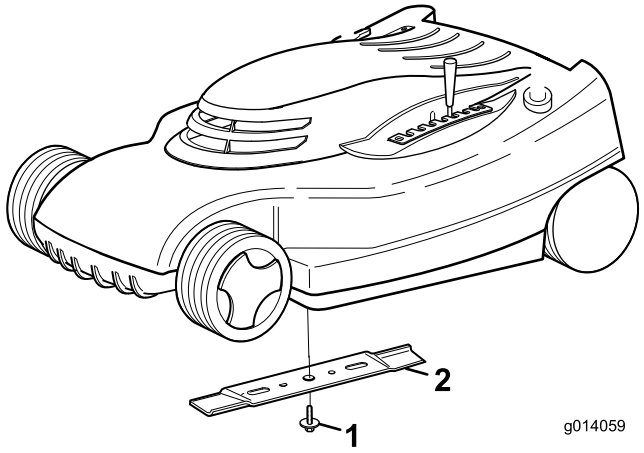

Figure 19

1. Blade bolt
2. Blade

2. Remove the blade bolt and the blade.

   Important: If the blade adapter comes off, ensure that you install it before installing the blade and blade bolt. Operating the machine without the blade adapter will damage the machine.

Sharpening the Blade

Use a file to sharpen the top side of the blade and maintain the original cutting angle.

Note: The blade will remain balanced if you remove the same amount of material from both cutting edges.

Important: Check the balance of the blade by putting it on a blade balancer. You can purchase an inexpensive balancer at a hardware store. A balanced blade stays in a horizontal position; an unbalanced blade settles to the heavy side. If the blade is not balanced, file more metal off the cutting edge on the heavy end of the blade.

Installing the Blade

Install a sharp, balanced blade and the blade bolt. The sail part of the blade must point toward the top of the machine housing to ensure correct installation. Tighten the blade bolt to 20 N-m.

Servicing the On/Off and Blade-Brake System

The motor and blade are designed to stop within 3 seconds after you release the control bar. Ensure that the control bar functions properly each time before you operate the machine. If the blade does not stop within 3 seconds or there is a grinding or scraping, metal-to-metal noise when you release the control bar, contact an Authorized Toro Service Dealer. This same recommendation applies if you observe heavy vibrations when using the machine.

Storage

1. Clean the machine housing.
2. Check the condition of the blade.
3. Fold the handle as shown in Figure 20 and Figure 21, depending on your model.

Important: Ensure that you do not crimp the control cables as you fold the handle.

⚠ CAUTION

The handles pass each other like a scissors while folding and unfolding them and can pinch your fingers.

Keep your fingers clear of the pivot points and crossing handles as you fold or unfold the handle.

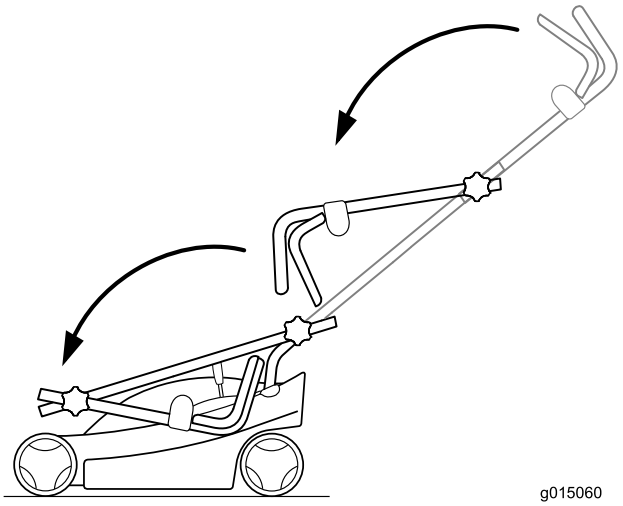

Figure 20
Model 21136 shown

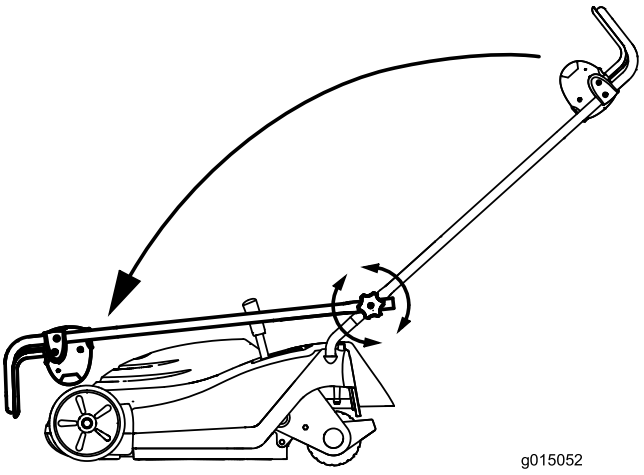

Figure 21
Model 21141 shown

4. Store the machine in a cool, clean, and dry place away from children.
5. Cover the machine to keep it clean and protected.

Troubleshooting

Problem	Possible Cause	Corrective Action
The motor does not start.	1. The extension cord is not connected to the machine. 2. The extension cord is damaged. 3. The fuse or circuit breaker is blown.	1. Connect the extension cord to the machine and plug the other end of the extension cord into a normal household outlet. 2. Check the extension cord, and repair or replace the cord if it is damaged. 3. Check the outlet fuse or the circuit breaker.
The motor starts hard or loses power.	1. The discharge chute is plugged. 2. The underside of the machine housing needs to be cleaned. 3. The cutting height is set too low.	1. Clean the discharge chute. 2. Clean the underside of the machine housing. 3. Set the cutting height to a higher position and start the motor again.
The mower or motor vibrates excessively.	1. The blade is not balanced. 2. The blade mounting bolt is loose. 3. The discharge chute is plugged. 4. The underside of the machine housing needs to be cleaned. 5. The motor mounting bolts are loose.	1. Balance the blade. 2. Tighten the blade mounting bolt. 3. Clean the discharge chute. 4. Clean the underside of the machine housing. 5. Tighten the motor mounting bolts.
There is an uneven cutting pattern.	1. The blade is dull and is not balanced. 2. You are mowing the same pattern every time you mow. 3. The underside of the machine housing needs to be cleaned.	1. Sharpen and balance the blade. 2. Change the mowing pattern. 3. Clean the underside of the machine housing.
The discharge chute plugs up.	1. The cutting height setting is set too low. 2. You are trying to mow wet grass. 3. The underside of the machine housing needs to be cleaned.	1. Raise the cutting height setting. 2. Allow the grass to dry before mowing. 3. Clean the underside of the machine housing.

Notes:

International Distributor List

Distributor:	Country:	Phone Number:	Distributor:	Country:	Phone Number:
Agrolanc Kft	Hungary	36 27 539 640	Maquiver S.A.	Colombia	57 1 236 4079
Balama Prima Engineering Equip.	Hong Kong	852 2155 2163	Maruyama Mfg. Co. Inc.	Japan	81 3 3252 2285
B-Ray Corporation	Korea	82 32 551 2076	Mountfield a.s.	Czech Republic	420 255 704 220
Casco Sales Company	Puerto Rico	787 788 8383	Mountfield a.s.	Slovakia	420 255 704 220
Ceres S.A.	Costa Rica	506 239 1138	Munditol S.A.	Argentina	54 11 4 821 9999
CSSC Turf Equipment (pvt) Ltd.	Sri Lanka	94 11 2746100	Norma Garden	Russia	7 495 411 61 20
Cyril Johnston & Co.	Northern Ireland	44 2890 813 121	Oslinger Turf Equipment SA	Ecuador	593 4 239 6970
Cyril Johnston & Co.	Republic of Ireland	44 2890 813 121	Oy Hako Ground and Garden Ab	Finland	358 987 00733
Equiver	Mexico	52 55 539 95444	Parkland Products Ltd.	New Zealand	64 3 34 93760
Femco S.A.	Guatemala	502 442 3277	Perfetto	Poland	48 61 8 208 416
ForGarder OU	Estonia	372 384 6060	Pratoverde SRL.	Italy	39 049 9128 128
G.Y.K. Company Ltd.	Japan	81 726 325 861	Prochaska & Cie	Austria	43 1 278 5100
Geomechaniki of Athens	Greece	30 10 935 0054	RT Cohen 2004 Ltd.	Israel	972 986 17979
Golf international Turizm	Turkey	90 216 336 5993	Riversa	Spain	34 9 52 83 7500
Guandong Golden Star	China	86 20 876 51338	Lely Turfcare	Denmark	45 66 109 200
Hako Ground and Garden	Sweden	46 35 10 0000	Solvert S.A.S.	France	33 1 30 81 77 00
Hako Ground and Garden	Norway	47 22 90 7760	Spypros Stavrinides Limited	Cyprus	357 22 434131
Hayter Limited (U.K.)	United Kingdom	44 1279 723 444	Surge Systems India Limited	India	91 1 292299901
Hydroturf Int. Co Dubai	United Arab Emirates	97 14 347 9479	T-Markt Logistics Ltd.	Hungary	36 26 525 500
Hydroturf Egypt LLC	Egypt	202 519 4308	Toro Australia	Australia	61 3 9580 7355
Irrimac	Portugal	351 21 238 8260	Toro Europe NV	Belgium	32 14 562 960
Irrigation Products Int'l Pvt Ltd.	India	0091 44 2449 4387	Valtech	Morocco	212 5 3766 3636
Jean Heybroek b.v.	Netherlands	31 30 639 4611	Victus Emak	Poland	48 61 823 8369

European Privacy Notice

The Information Toro Collects
Toro Warranty Company (Toro) respects your privacy. In order to process your warranty claim and contact you in the event of a product recall, we ask you to share certain personal information with us, either directly or through your local Toro company or dealer.

The Toro warranty system is hosted on servers located within the United States where privacy law may not provide the same protection as applies in your country.

BY SHARING YOUR PERSONAL INFORMATION WITH US, YOU ARE CONSENTING TO THE PROCESSING OF YOUR PERSONAL INFORMATION AS DESCRIBED IN THIS PRIVACY NOTICE.

The Way Toro Uses Information
Toro may use your personal information to process warranty claims, to contact you in the event of a product recall and for any other purpose which we tell you about. Toro may share your information with Toro's affiliates, dealers or other business partners in connection with any of these activities. We will not sell your personal information to any other company. We reserve the right to disclose personal information in order to comply with applicable laws and with requests by the appropriate authorities, to operate our systems properly or for our own protection or that of other users.

Retention of your Personal Information
We will keep your personal information as long as we need it for the purposes for which it was originally collected or for other legitimate purposes (such as regulatory compliance), or as required by applicable law.

Toro's Commitment to Security of Your Personal Information
We take reasonable precautions in order to protect the security of your personal information. We also take steps to maintain the accuracy and current status of personal information.

Access and Correction of your Personal Information
If you would like to review or correct your personal information, please contact us by email at legal@toro.com.

Australian Consumer Law

Australian customers will find details relating to the Australian Consumer Law either inside the box or at your local Toro Dealer.

The Toro Warranty and The Toro GTS Starting Guarantee

Conditions and Products Covered

The Toro Company and its affiliate, Toro Warranty Company, pursuant to an agreement between them, jointly promise to repair for the original purchaser[1] the Toro Product listed below if defective in materials or workmanship or if the Toro GTS (Guaranteed to Start) engine will not start on the first or second pull, provided the routine maintenance required in the *Operator's Manual* have been performed.

The following time periods apply from the date of purchase:

Products	Warranty Period
Walk Power Mowers	
• Cast Deck	5 years Residential Use[2] 90 Days Commercial Use
• Engine	5 years GTS Guarantee, Residential Use[3]
• Battery	2 years
• Steel Deck	2 years Residential Use[2] 30 Days Commercial Use
• Engine	2 years GTS Guarantee, Residential Use[3]
TimeMaster Mowers	3 years Residential Use[2] 90 Days Commercial Use
• Engine	3 years GTS Guarantee, Residential Use[3]
• Battery	2 years
Electric Hand Held Products and Walk Power Mowers	2 years Residential Use[2] No Warranty for Commercial Use
Snowthrowers	
• Single Stage	2 years Residential Use[2] 45 Days Commercial Use
• Engine	2 years GTS Guarantee, Residential Use[3]
• Two Stage	3 years Residential Use[2] 45 Days Commercial Use
• Chute, chute deflector and impeller housing cover	Lifetime (original owner only)[5]
Electric Snowthrowers	2 years Residential Use[2] No Warranty for Commercial Use
All Ride-On Units Below	
• Engine	See engine manufacturer's warranty[4]
• Battery	2 years Residential Use[2]
• Attachments	2 years Residential Use[2]
DH Lawn & Garden Tractors	2 years Residential Use[2] 30 Days Commercial Use
XLS Lawn & Garden Tractors	3 years Residential Use[2] 30 Days Commercial Use
TimeCutter	3 years Residential Use[2] 30 Days Commercial Use
TITAN Mowers	3 years or 240 hours[5]
• Frame	Lifetime (original owner only)[6]

[1]Original Purchaser means the person who originally purchased the Toro Product.

[2]Residential use means use of the product on the same lot as your home. Use at more than one location is considered commercial use and the commercial use warranty would apply.

[3]The Toro GTS Starting Guarantee does not apply when the product is used commercially.

[4]Some engines used on Toro Products are warranted by the engine manufacturer.

[5]Whichever occurs first.

[6]Lifetime Frame Warranty - If the main frame, consisting of the parts welded together to form the tractor structure that other components such as the engine are secured to, cracks or breaks in normal use, it will be repaired or replaced, at Toro's option, under warranty at no cost for parts and labor. Frame failure due to misuse or abuse and failure or repair required due to rust or corrosion are not covered.

Warranty may be denied if the hour meter is disconnected, altered, or shows signs of being tampered with.

Owner Responsibilities

You must maintain your Toro Product by following the maintenance procedures described in the *Operator's Manual*. Such routine maintenance, whether performed by a dealer or by you, is at your expense.

Instructions for Obtaining Warranty Service

If you think that your Toro Product contains a defect in materials or workmanship, follow this procedure:

1. Contact your seller to arrange service of the product. If for any reason it is impossible for you to contact your seller, you may contact any Toro Authorized Distributor to arrange service. See attached Distributor List.
2. Bring the product and your proof of purchase (sales receipt) to the servicing outlet. If for any reason you are dissatisfied with the servicing outlet's analysis or with the assistance provided, contact us at:

   Toro Customer Care Department, RLC Division
   Toro Warranty Company
   8111 Lyndale Avenue South
   Bloomington, MN 55420-1196
   001–952–948–4707

Items and Conditions Not Covered

There is no other express warranty except for special emission system coverage and engine warranty coverage on some products. This express warranty does not cover the following:

- Cost of regular maintenance service or parts, such as filters, fuel, lubricants, oil changes, spark plugs, air filters blade sharpening or worn blades, cable/linkage adjustments, or brake and clutch adjustments
- Components failing due to normal wear
- Any product or part which has been altered or misused or neglected and requires replacement or repair due to accidents or lack of proper maintenance
- Pickup and delivery charges
- Repairs or attempted repairs by anyone other than an Authorized Toro Service Dealer
- Repairs necessary due to failure to follow recommended fuel procedure (consult *Operator's Manual* for more details)
  - Removing contaminants from the fuel system is not covered
  - Use of old fuel (more than one month old) or fuel which contains more than 10% ethanol or more that 15% MTBE
  - Failure to drain the fuel system prior to any period of non-use over one month
- Repairs or adjustments to correct starting difficulties due to the following:
  - Failure to follow proper maintenance procedures or recommended fuel procedure
  - Rotary mower blade striking an object
- Special operational conditions where starting may require more than two pulls:
  - First time starts after extended period of non-use over three months or seasonal storage
  - Cool temperature starts such as those found in early spring and late autumn
  - Improper starting procedures - if you are having difficulty starting your unit, please check the *Operator's Manual* to ensure that you are using the correct starting procedures. This can save an unnecessary visit to an Authorized Toro Service Dealer.

General Conditions

The purchaser is covered by the national laws of each country. The rights to which the purchaser is entitled with the support of these laws are not restricted by this warranty.