Form No. 3392-801 Rev A

# 41cm Recycler® Lawn Mower

**Model No. 21131—Serial No. 315000001 and Up**

**Model No. 21132—Serial No. 315000001 and Up**

**Operator's Manual**

# Introduction

**This rotary-blade, walk-behind lawn mower is intended to be used by residential homeowners. It is designed primarily for cutting grass on well-maintained lawns on residential properties. It is not designed for cutting brush or for agricultural uses.**

Read this information carefully to learn how to operate and maintain your product properly and to avoid injury and product damage. You are responsible for operating the product properly and safely. Keep this manual for future reference.

You may contact Toro directly at www.Toro.com for product safety and operation training materials, accessory information, help finding a dealer, or to register your product.

Whenever you need service, genuine Toro parts, or additional information, contact an Authorized Service Dealer or Toro Customer Service and have the model and serial numbers of your product ready. Figure 1 identifies the location of the model and serial numbers on the product.

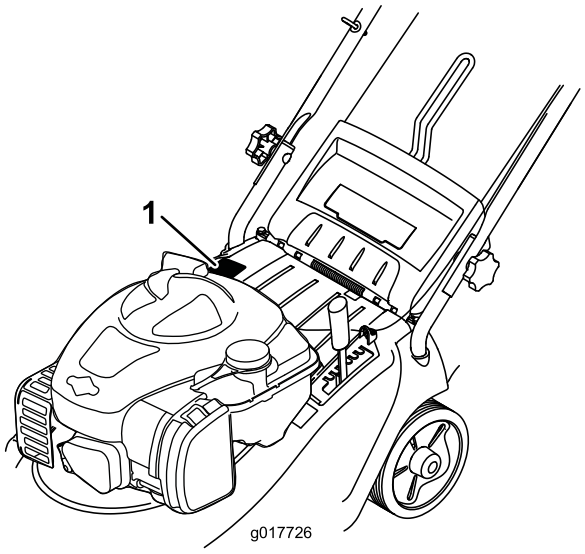


**Figure 1**

1. Model and serial number plate

Write the product model and serial numbers in the space below:

**Model No.** _____

**Serial No.** _____

This manual identifies potential hazards and has safety messages identified by the safety alert symbol (Figure 2), which signals a hazard that may cause serious injury or death if you do not follow the recommended precautions.



**Figure 2**

1. Safety alert symbol

This manual uses 2 words to highlight information. **Important** calls attention to special mechanical information and **Note** emphasizes general information worthy of special attention.

Net Torque: The gross or net torque of this engine was laboratory rated by the engine manufacturer in accordance with the Society of Automotive Engineers (SAE) J1940. As configured to meet safety, emission, and operating requirements, the actual engine torque on this class of mower will be significantly lower. Go to www.Toro.com to view specifications on your mower model.

Do not tamper with the engine controls or alter the governor speed; doing so may create an unsafe condition resulting in personal injury.

This product complies with all relevant European directives. For details, please see the separate product specific Declaration of Conformity (DOC) sheet.

# Contents

Introduction ..... 1
Safety ..... 2
General Lawn Mower Safety ..... 2
Sound Pressure ..... 3
Sound Power ..... 3
Vibration, Hand/arm ..... 4
Safety and Instructional Decals ..... 5
Setup ..... 6
1 Unfolding the Handle ..... 6

© 2015—The Toro® Company
8111 Lyndale Avenue South
Bloomington, MN 55420

Register at www.Toro.com.

CE

Original Instructions (EN)
Printed in the UK.
All Rights Reserved

*3392-801* A

2 Assembling the Grass Bag ..... 6
3 Filling the Engine with Oil ..... 7
Product Overview ..... 8
Specifications ..... 8
Operation ..... 9
Filling the Fuel Tank ..... 9
Checking the Engine Oil Level ..... 9
Adjusting the Cutting Height ..... 10
Starting the Engine ..... 10
Using the Self-propel Drive (model 21132 only) ..... 11
Stopping the Engine ..... 11
Bagging the Clippings ..... 11
Mowing Tips ..... 12
Maintenance ..... 12
Recommended Maintenance Schedule(s) ..... 12
Cleaning the Mower Housing ..... 12
Cleaning the Air Filter ..... 13
Adjusting the Self-propel Cable (model 21132 only) ..... 13
Lubricating the Machine ..... 13
Changing the Engine Oil ..... 13
Servicing the Blade ..... 14
Storage ..... 16
Troubleshooting ..... 17

# Safety

This machine has been designed in accordance with EN ISO 5395:2013.

**Improperly using or maintaining this machine can result in injury. To reduce the potential for injury, comply with these safety instructions.**

**To ensure maximum safety, best performance, and to gain knowledge of the product, it is essential that you and any other operator of the machine read and understand the contents of this manual before the engine is ever started. Pay particular attention to the safety alert symbol (Figure 2) which means Caution, Warning, or Danger—"personal safety instruction." Read and understand the instruction because it has to do with safety. Failure to comply with the instruction may result in personal injury.**

# General Lawn Mower Safety

This cutting machine is capable of amputating hands and feet and of throwing objects. Failure to observe the following safety instructions could result in serious injury or death.

## Training

- Read the instructions carefully. Be familiar with the controls and the proper use of the equipment.
- Never allow children or people unfamiliar with these instructions to use the machine. Local regulations can restrict the age of the operator.
- Keep in mind that the operator or user is responsible for accidents or hazards occurring to other people or their property.
- Understand explanations for all pictograms used on the machine or in the instructions.

## Gasoline

**WARNING**-Gasoline is highly flammable. Take the following precautions.

- Store fuel in containers specifically designed for this purpose.
- Refuel outdoors only and do not smoke while refueling.
- Add fuel before starting the engine. Never remove the cap of the fuel tank or add gasoline while the engine is running or when the engine is hot.
- If gasoline is spilled, do not attempt to start the engine but move the machine away from the area of spillage and avoid creating any source of ignition until gasoline vapors have dissipated.
- Replace all fuel tank and container caps securely.

## Preparation

- While mowing, always wear substantial, slip-resistant footwear and long trousers. Do not operate the equipment when barefoot or wearing open sandals.
- Thoroughly inspect the area where the equipment is to be used and remove all stones, sticks, wires, bones and other foreign objects.
- Before using, always visually inspect to see that guards and safety devices, such as deflectors and/or grass catchers, are in place and working correctly.
- Before using, always visually inspect to see that the blades, blade bolts and cutter assembly are not worn or damaged. Replace worn or damaged blades and bolts in sets to preserve balance.

## Starting

- Do not tilt the machine when starting the engine unless the machine must be tilted for starting. In this case, do not tilt it more than absolutely necessary and lift only the part which is away from the operator.
- Start the engine carefully according to instructions and with feet well away from the blade(s) and not in front of the discharge chute.

## Operation

- Never mow while people, especially children, or pets are nearby.
- Mow only in daylight or in good artificial light.
- Stay alert for holes in the terrain and other hidden hazards.

- Do not put hands or feet near or under rotating parts. Keep clear of the discharge opening at all times.
- Never pick up or carry a lawn mower while the engine is running.
- Use extreme caution when reversing or pulling a pedestrian-controlled mower toward you.
- Walk, never run.
- Slopes:
  - Do not mow excessively steep slopes.
  - Exercise extreme caution when on slopes.
  - Mow across the face of slopes, never up and down, and exercise extreme caution when changing direction on slopes.
  - Always be sure of your footing on slopes.
- Reduce speed on slopes and in sharp turns to prevent overturning or loss of control.
- Stop the blade if the machine must be tilted for transportation when crossing surfaces other than grass and when transporting the machine to and from the area to be mowed.
- Do not operate the engine in a confined space where dangerous carbon monoxide and other exhaust gasses can collect.
- Stop the engine
  - whenever you leave the machine.
  - before refueling.
  - before removing the grass catcher.
  - before making height adjustment unless adjustment can be made from the operating position.
- Stop the engine and disconnect the spark-plug wire.
  - before clearing blockages or unclogging chute.
  - before checking, cleaning or working on the machine.
  - after striking a foreign object, inspect the machine for damage and make repairs before restarting and operating the machine.
  - if the machine starts to vibrate abnormally (check immediately).
- Lightning can cause severe injury or death. If you see lightning or hear thunder in the area, do not operate the machine; seek shelter.
- Watch out for traffic when crossing or near roadways.

## Maintenance and Storage

- Keep all nuts, bolts, and screws tight to be sure that the equipment is in safe working condition.
- Do not use pressure-cleaning equipment on the machine.
- Never store the equipment with gasoline in the tank and inside a building where fumes can reach an open flame or spark.
- Allow the engine to cool before storing in any enclosure.
- To reduce the fire hazard, keep the engine, silencer, battery compartment and gasoline storage area free of grass, leaves, or excessive grease.
- Check grass catcher components and the discharge guard frequently and replace with manufacturer's recommended parts, when necessary.
- Replace worn or damaged parts for safety.
- Replace faulty silencers.
- If the fuel tank has to be drained, do this outdoors.
- Do not change the engine governor settings or overspeed the engine. Operating an engine at excessive speed can increase the hazard of personal injury.
- Be careful while adjusting the machine to prevent entrapment of the fingers between moving blades and fixed parts of the machine.
- **To ensure the best performance and safety, purchase only genuine Toro replacement parts and accessories. Do not use *will fit* parts and accessories; they may cause a safety hazard.**

## Hauling

- Use care when loading or unloading the machine into a trailer or a truck.
- Use full-width ramps for loading the machine into a trailer or a truck.
- Tie the machine down securely using straps, chains, cable, or ropes. Both the front and the rear straps should be directed down and outward from the machine.

# Sound Pressure

This unit has a sound pressure level at the operator's left ear of 84 dBA and right ear of 83 dBA, which includes an Uncertainty Value (K) of 2.5 dBA.

Sound pressure level was determined according to the procedures outlined in EN ISO 5395:2013.

# Sound Power

This unit has a guaranteed sound power level of 96 dBA and a measured sound power level of 92.6 dBA, which includes an Uncertainty Value (K) of 2.4 dBA.

Sound power level was determined according to the procedures outlined in ISO 11094.

**⚠ CAUTION**

**Long-term exposure to noise while operating the machine may cause some hearing loss.**

**Wear adequate hearing protection whenever you operate the machine for an extended period of time.**

# Vibration, Hand/arm

Measured vibration level for right hand = 3.3 $m/s^2$

Measured vibration level for left hand = 3.4 $m/s^2$

Uncertainty Value (K) = 1.5 $m/s^2$

Measured values were determined according to the procedures outlined in EN ISO 5395:2013.

**⚠ CAUTION**

**Long-term exposure to vibration while operating the machine may cause some numbness in the hands and wrists.**

**Wear gloves that dampen the vibration whenever you operate the machine for an extended period of time.**

# Safety and Instructional Decals

**Important:** **Safety and instruction decals are located near areas of potential danger. Replace damaged or lost decals.**

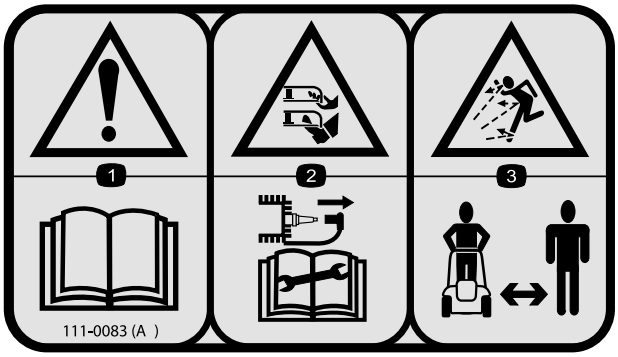


**111–0083**

1. Warning—read the *Operator's Manual.*
2. Cutting/dismemberment hazard of hand or foot, mower blade; disconnect the spark plug lead and read the *Operator's Manual* before servicing or performing maintenance.
3. Thrown object hazard; keep bystanders a safe distance from the mower.

---




**111-4782**

1. Height of cut

---

# Setup

**Note:** Do not attempt to start the engine until the mower is fully assembled.

# 1

## Unfolding the Handle

### No Parts Required

### Procedure

1. Carefully unfold the handle, keeping the cables clear of the pivot points so they do not get pinched.

   **⚠ CAUTION**

   **The handles pass each other like a scissors while folding and unfolding them and can pinch your fingers.**

   **Keep your fingers clear of the pivot points and crossing handles as you fold of unfold the handles.**

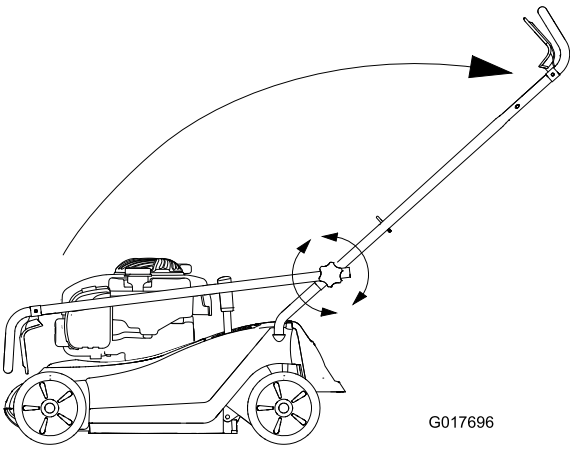


**Figure 3**

2. Tighten the knobs on the handle to secure it in place.

# 2

## Assembling the Grass Bag

### No Parts Required

### Procedure

Insert the metal frame into the grassbag fabric and then clip into position (Figure 4).

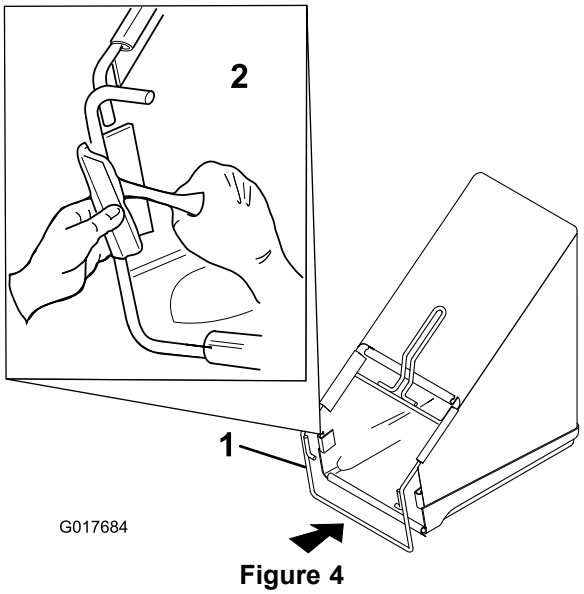


**Figure 4**

1. Metal frame
2. Clipping the frame to the grassbag

# 3

# Filling the Engine with Oil

## No Parts Required

## Procedure

Your mower does not come with oil in the engine.

1. Remove the dipstick (Figure 5).

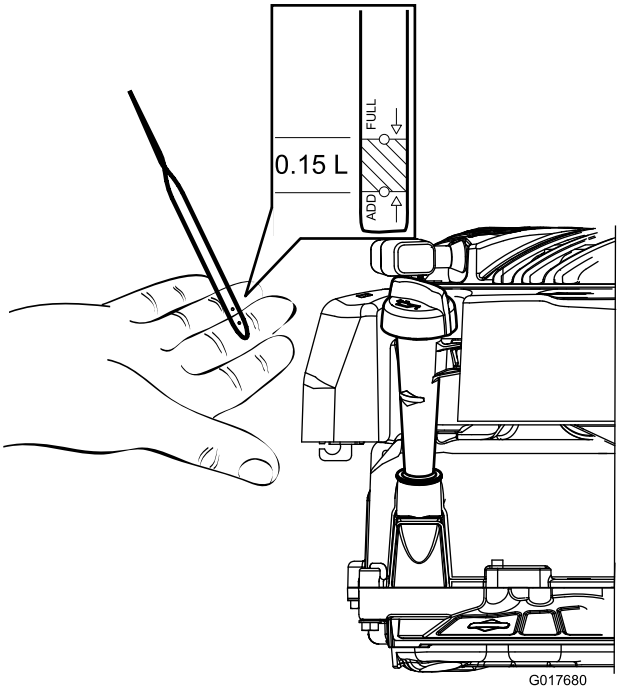


**Figure 5**

2. Slowly pour oil into the oil fill tube until the oil level reaches the Full line on the dipstick (Figure 5 and Figure 6). Wait 3 minutes after adding oil to check the oil level with the dipstick. Do not overfill. (Max. fill: 0.47 l (16 oz.), type: SAE 30 detergent oil with an API service classification of SF, SG, SH, SJ, SL, or higher.)

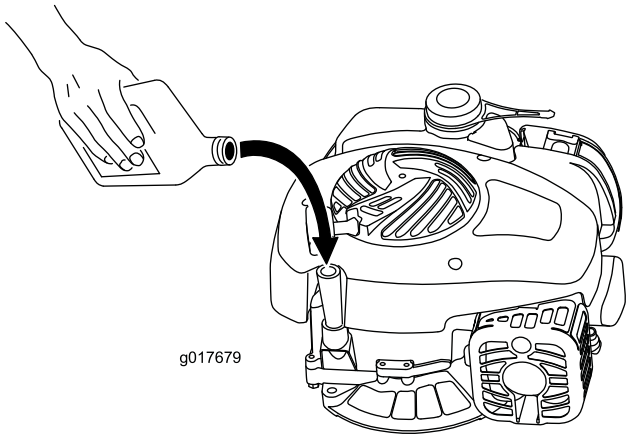


**Figure 6**

3. Install the dipstick securely.

**Important:** ***Change the engine oil after the first 5 operating hours;*** **change it yearly thereafter. Refer to Changing the Engine Oil.**

# Product Overview

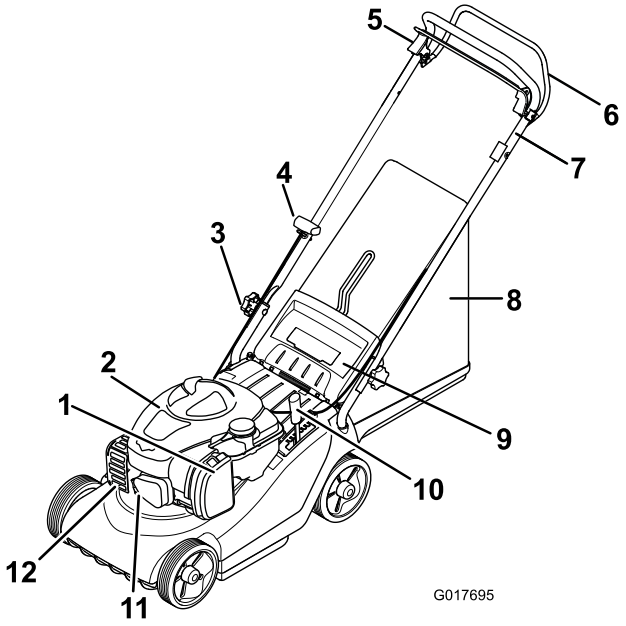


**Figure 7**

1. Air cleaner
2. Engine cover
3. Handlebar securing knob
4. Recoil start handle
5. Engine stop handle
6. Self-propel handle (model 21132 only)
7. Upper handlebar
8. Grassbag
9. Rear deflector
10. Height of cut adjustor
11. Spark plug lead
12. Exhaust guard

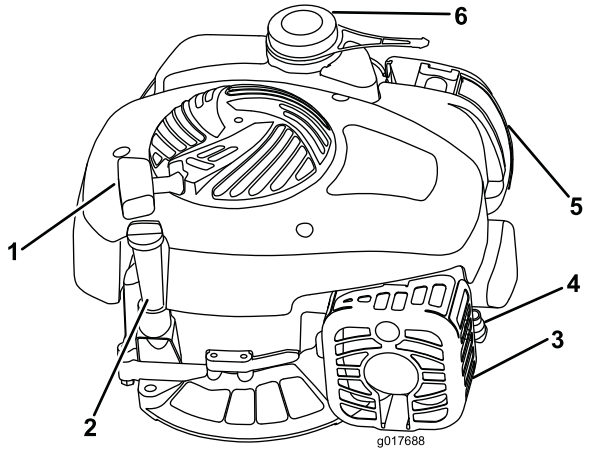


**Figure 8**

1. Recoil start handle
2. Oil filler cap and dipstick
3. Exhaust guard
4. Spark plug lead
5. Air cleaner
6. Fuel cap

# Specifications

| Model | 21131 | 21132 |
|---|---|---|
| **Weight** | 30 kg | 32 kg |
| **Length** | 137 cm | 137 cm |
| **Width** | 47.5 cm | 47.5 cm |
| **Height** | 105 cm | 105 cm |
| **Width of cut** | 41 cm | 41 cm |
| **Height-of-cut range (7 positions)** | 13 to 65 mm | 13 to 65 mm |
| **Nominal power** | 2.1 kW | 2.1 kW |
| **Maximum operating engine speed** | 2,850 rpm | 2,850 rpm |

# Operation

## Filling the Fuel Tank

**⚠ DANGER**

**Gasoline is extremely flammable and explosive. A fire or explosion from gasoline can burn you and others.**

- **To prevent a static charge from igniting the gasoline, place the container and/or mower directly on the ground before filling, not in a vehicle or on an object.**
- **Fill the tank outdoors when the engine is cold. Wipe up spills.**
- **Do not handle gasoline when smoking or around an open flame or sparks.**
- **Store gasoline in an approved fuel container, out of the reach of children.**

**Recommended Fuel:**

- For best results, use only clean, fresh (less than 30 days old), unleaded gasoline with an octane rating of 87 or higher ((R+M)/2 rating method).
- **Ethanol:** Gasoline with up to 10% ethanol (gasohol) or 15% MTBE (methyl tertiary butyl ether) by volume is acceptable. Ethanol and MTBE are not the same. Gasoline with 15% ethanol (E15) by volume is not approved for use. **Never use** gasoline that contains more than 10% ethanol by volume, such as E15 (contains 15% ethanol), E20 (contains 20% ethanol), or E85 (contains 85% ethanol). Using unapproved gasoline may cause performance problems and/or engine damage which may not be covered under warranty.
- **Do not** use gasoline containing methanol.
- **Do not** store fuel either in the fuel tank or fuel containers over the winter unless a fuel stabilizer is used.
- **Do not** add oil to gasoline.

**Important: To reduce starting problems, add fuel stabilizer to the fuel all season, mixing it with gasoline less than 30 days old.**

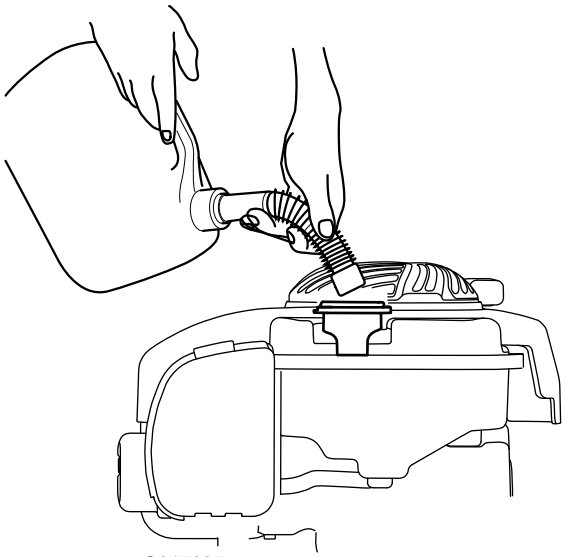


**Figure 9**

## Checking the Engine Oil Level

**Service Interval:** Before each use or daily

1. Remove the dipstick, wipe it clean, and fully install the dipstick.
2. Remove the dipstick and check the oil level (Figure 10). If the oil level is below the Add mark on the dipstick, slowly pour oil into the oil fill tube to raise the oil level to the Full mark on the dipstick. Wait 3 minutes after adding oil to check the oil level with the dipstick (Max. fill: 20 oz. (0.59 l), type: SAE 30 detergent oil with an API service classification of SF, SG, SH, SJ, SL, or higher).

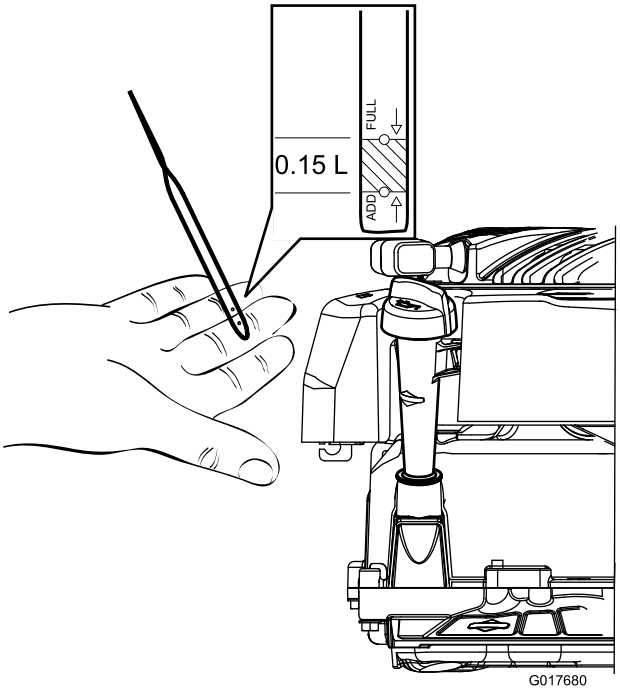


**Figure 10**

3. Install the dipstick.

# Adjusting the Cutting Height

**⚠ WARNING**

**Adjusting the cutting height may bring you into contact with the moving blade, causing serious injury.**

- **Stop the engine and wait for all moving parts to stop.**
- **Do not put your fingers under the housing when adjusting the cutting height.**

**⚠ CAUTION**

**If the engine has been running, the muffler will be hot and can severely burn you. Keep away from the hot muffler.**

To adjust the height of cut:

1. Grip the lever and pull sideways to disengage it from the locking notch (Figure 11).

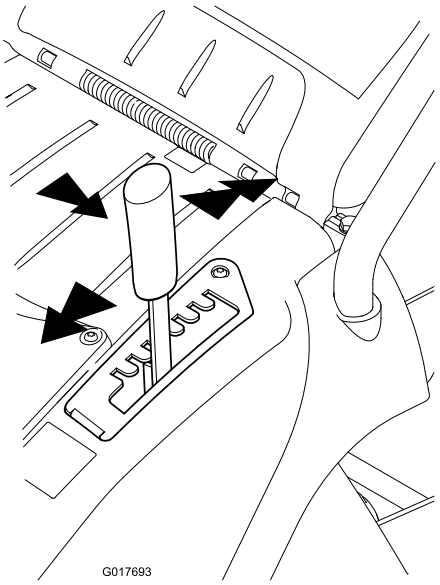


**Figure 11**

1. Height-of-cut adjusting lever

2. Push it forwards to lower or pull it backwards to raise the height of cut (Figure 11).
3. Release the lever at the required position and ensure that it locks firmly into one of the eight setting notches (Figure 11).

# Starting the Engine

**⚠ WARNING**

**Allow the engine to come to a complete stop before starting it. Failure to do this could damage the engine making the mower unsafe.**

1. Hold the engine stop handle against the handlebar (Figure 12).

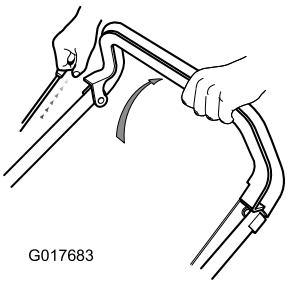


**Figure 12**

2. Pull the recoil start handle (Figure 12).

**Note:** If the machine does not start after several attempts, contact an Authorized Service Dealer.

# Using the Self-propel Drive (model 21132 only)

To operate the self-propel drive, squeeze the self-propel drive bar toward the handle and hold it Figure 13).

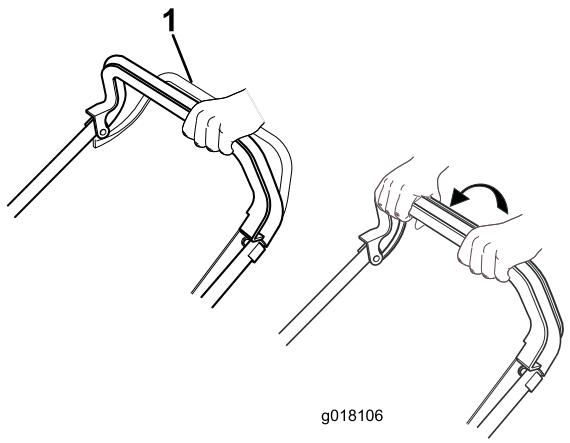


**Figure 13**

1. Self-propel drive bar

To disengage the self-propel drive, release the self-propel drive bar.

**Note:** The maximum self-propel ground speed is fixed.

# Stopping the Engine

To stop the engine, release the engine stop handle.

**Important: When you release the engine stop handle, both the engine and the blade should stop within 3 seconds. If they do not stop properly, stop using your mower immediately and contact an Authorized Service Dealer.**

# Bagging the Clippings

Install the grass bag to collect the clippings.

1. Lift the rear deflector, remove the mulch plug (Figure 15), and install the grass bag onto the lugs (Figure 14).

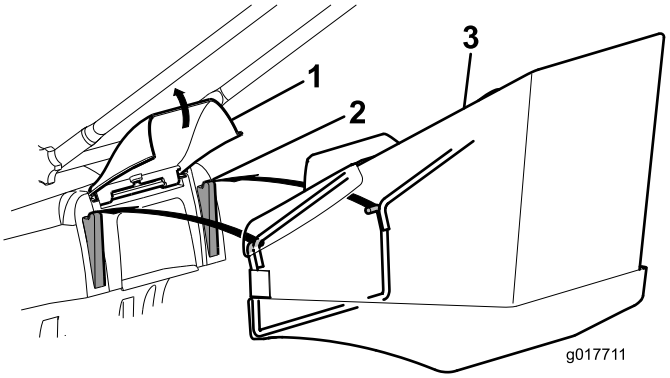


**Figure 14**

1. Rear door
2. Lug
3. Grass bag

2. Release the rear door.
3. Mow with the grass bag attached.
4. When the bag is full, stop the engine, remove the grass bag from the mower, and empty the contents.

**Note:** To convert from bagging to recycling, remove the grass bag, replace the mulch plug you removed in Step 1, and lower the rear door (Figure 15).

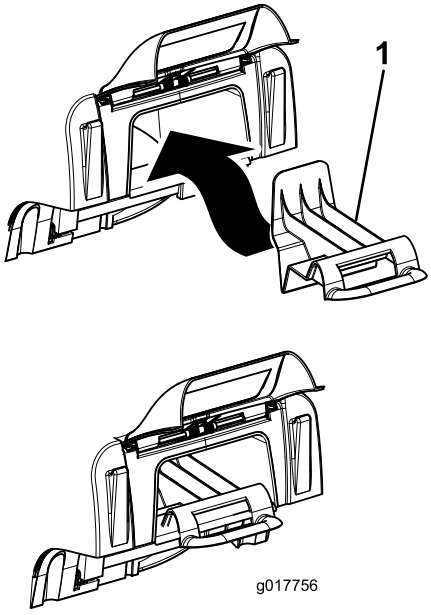


**Figure 15**

1. Mulch plug

## Mowing Tips

Follow these instruction when cutting grass for the best cutting results and lawn appearance.

- Maintain a **sharp blade** throughout the mowing season.
- **Only mow dry grass.** Wet grass tends to clump on the yard and may cause the mower to plug up or the engine to stall. They may also be slippery to walk on and could cause you to slip and fall.
- While cutting single swaths, ensure an overlap of about 4 cm.
- When cutting very tall grass, you may want to first mow at the highest height-of-cut setting and a slower walking speed; then mow again at a lower setting for best lawn appearance.
- If the finished cut lawn appearance is unsatisfactory, try one or more of the following:
  - Sharpen the blade.
  - Walk at a slower pace while mowing.
  - Raise the height-of-cut setting on your mower.
  - Cut the grass more frequently.
  - Overlap cutting swaths instead of cutting a full swath with each pass.

# Maintenance

Toro has designed this product to give you years of trouble-free use. Should it need service, bring the product to an Authorized Toro Service Dealer.

**Note:** Determine right and left side from normal operating position.

## Recommended Maintenance Schedule(s)

| Maintenance Service Interval | Maintenance Procedure |
|---|---|
| Before each use or daily | • Check the engine oil level.<br>• Clean the mower housing. |
| Every 25 hours | • Clean the air filter.<br>• Check the self-propel cable and adjust if necessary (model 21132 only).<br>• Lubricate the machine.<br>• Sharpen the blade. |
| Every 50 hours | • Change the engine oil. |
| Every 2 years | • Replace the blade. |

## Cleaning the Mower Housing

**Service Interval:** Before each use or daily

After each use, clean the mower housing.

Before cleaning, stop the engine, wait for all moving parts to stop, and disconnect the spark plug lead.

**Important: Do not clean the mower with water. Moisture can get trapped in the mower and may cause corrosion of internal parts.**

- Clean the underside of the mower housing. Remove dirt and grass clippings with a hardwood scraper/brush (Figure 16).

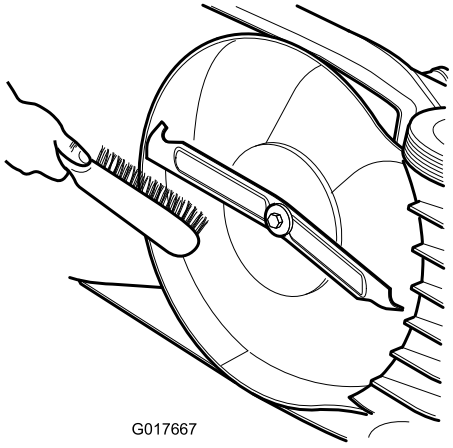


**Figure 16**

- Remove the debris from the housing vents along the top of the mower and from the mower housing.

# Cleaning the Air Filter

**Service Interval:** Every 25 hours

1. Undo the latches that hold the air filter cover to the engine (Figure 17).

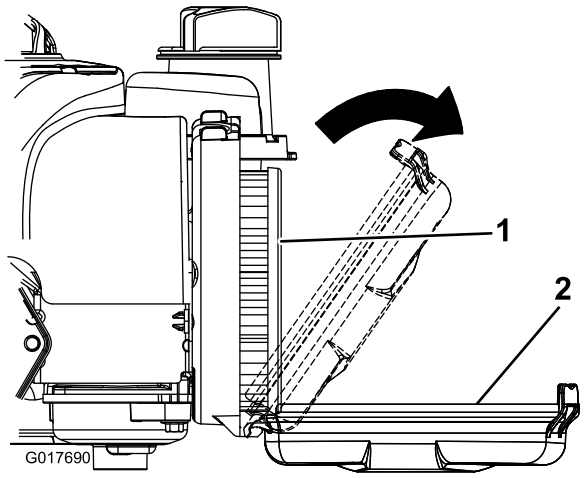


**Figure 17**

1. Paper element
2. Cover

2. Remove and inspect the air filter.
3. If it is extremely dirty, replace it.
4. Replace the element and close the cover, securing the latches to the engine.

# Adjusting the Self-propel Cable (model 21132 only)

**Service Interval:** Every 25 hours

Ensure that the self-propel drive bar is positioned 55–70 mm from the handlebar by adjusting the self-propel cable (Figure 18).

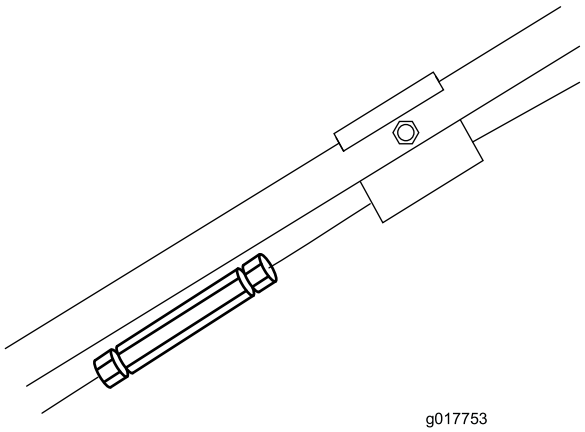


**Figure 18**

# Lubricating the Machine

**Service Interval:** Every 25 hours

Lubricate the wheels, linkages, and pivot points with engine oil (Figure 19).

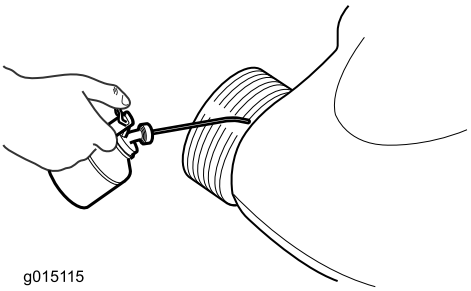


**Figure 19**

# Changing the Engine Oil

**Service Interval:** Every 50 hours

1. Drain the fuel by running the engine until the fuel tank is empty.
2. Disconnect the spark plug lead.
3. Allow the engine to cool.
4. Tip the mower on its right side, ensuring that the air cleaner faces upwards to prevent engine damage.
5. Remove the dipstick and drain the oil into a suitable container.
6. Slowly pour oil into the oil fill tube until the oil level reaches the Full line on the dipstick (Figure 20). Wait 3 minutes after adding oil to check the oil level with the dipstick. Do not overfill. (Max. fill: 0.47 l (16 oz.), type: SAE 30 detergent oil with an API service classification of SF, SG, SH, SJ, SL, or higher.)

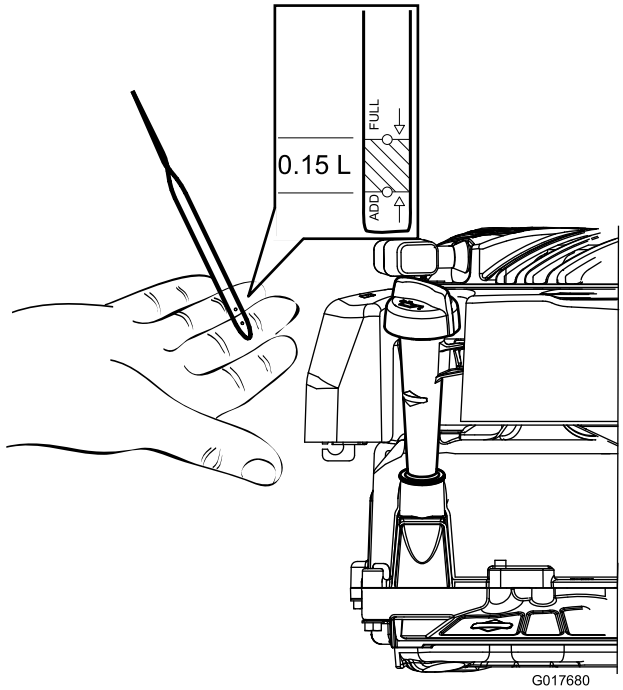


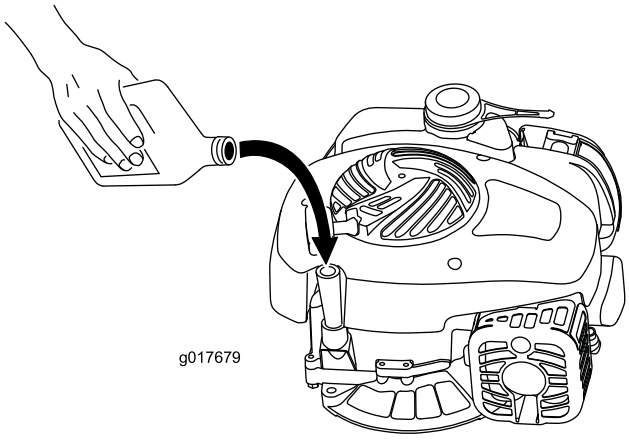


**Figure 20**

7. Install the dipstick securely.
8. Recycle the used oil properly.

# Servicing the Blade

Always mow with a sharp blade. As sharp blade cuts the grass evenly, without tearing or shredding the grass.

When you replace the blade, use only genuine Toro replacement blades.

**⚠ WARNING**

**Someone could accidentally start the engine and cause a serious injury to the operator or to bystanders.**

**Do not attempt to inspect, remove, or replace the blade without first disconnecting the spark plug lead.**

1. Stop the engine and wait for all moving parts to stop.
2. Disconnect the spark plug lead (Figure 21).

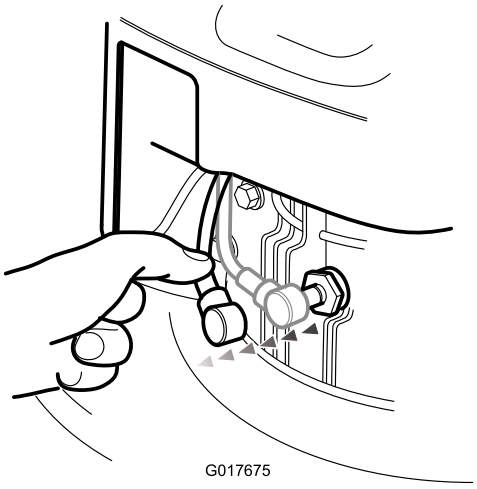


**Figure 21**

3. Tip the mower onto its side.
4. Carefully examine the blade for sharpness and wear, especially where the flat and curved parts of the blade meet. If you notice wear, replace the blade.

   **Note:** For best performance, install a new blade before the mowing season begins. During the season, file down small nicks on the blade to maintain its cutting edge.

**⚠ DANGER**

**A worn or damaged blade could break and a piece of blade could be thrown in the operator's or bystander's direction, causing serious personal injury or death.**

**Inspect the blade periodically for wear or damage, and replace a worn or damaged blade.**

## Removing the Blade

1. Grasp the end of the blade (Figure 22) with a rag or thickly padded glove.

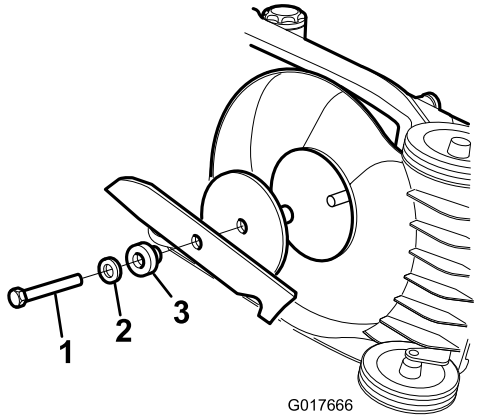


**Figure 22**

1. Blade bolt
2. Washer
3. Distance piece

2. Remove the blade bolt and the blade.

**Important: If the blade adapter comes off, ensure that you install it before installing the blade and blade bolt. Operating the mower without the blade adapter will damage the mower.**

## Sharpening the Blade

**Service Interval:** Every 25 hours

Use a file to sharpen the top side of the blade and maintain the original cutting angle (Figure 23).

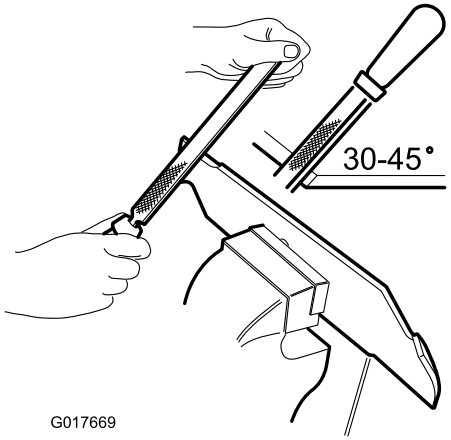


**Figure 23**

**Note:** The blade will remain balanced if you remove the same amount of material from both cutting edges.

**Important: Check the balance of the blade by putting it on a blade balancer. You can purchase an inexpensive balancer at a hardware store. A balanced blade stays in a horizontal position; an unbalanced blade settles to the heavy side (Figure 24). If the blade is not balanced, file more metal off the cutting edge on the heavy end of the blade.**

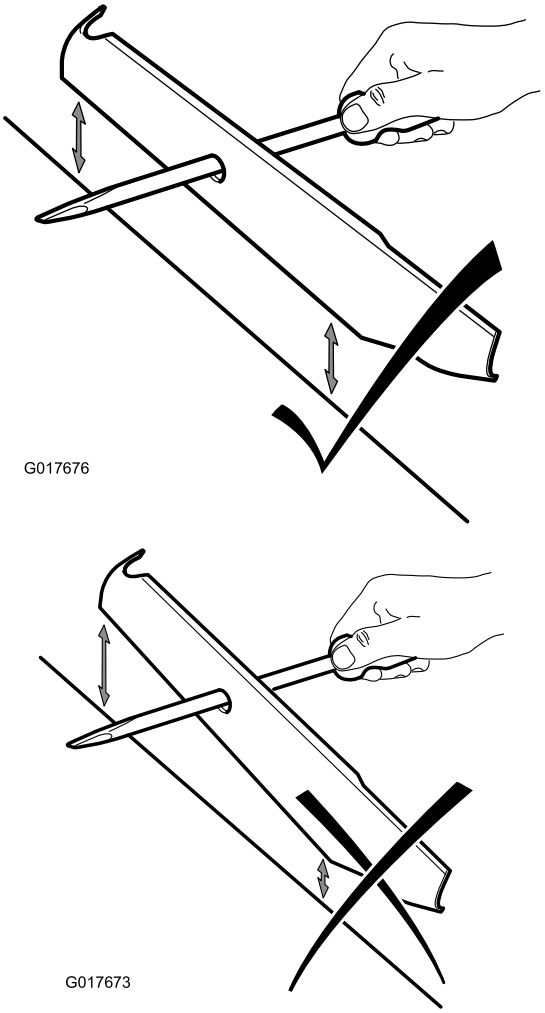


**Figure 24**

## Installing the Blade

**Service Interval:** Every 2 years

Install a sharp, balanced blade and the blade bolt. The sail part of the blade must point toward the top of the mower housing to ensure correct installation. Tighten the blade bolt to 54 N-m (Figure 22).

**Important: If the blade is excessively worn or damaged, replace the blade.**

# Storage

1. Clean the mower housing.
2. Check the condition of the blade.
3. Fold the handle as shown in Figure 25.

   **Important: Ensure that you do not crimp the control cables as you fold the handle.**

   **⚠ CAUTION**

   **The handles pass each other like a scissors while folding and unfolding them and can pinch your fingers.**

   **Keep your fingers clear of the pivot points and crossing handles as you fold or unfold the handles.**

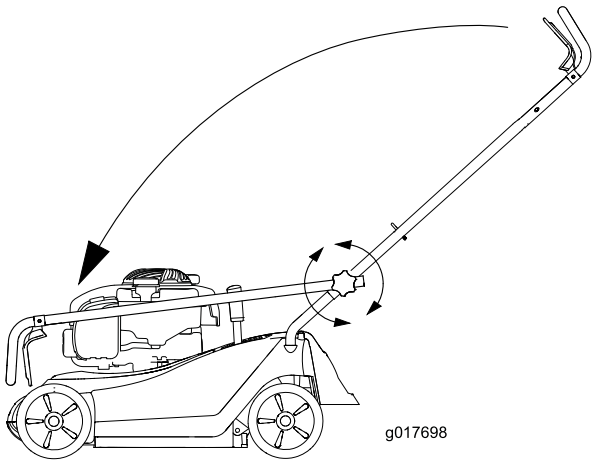


**Figure 25**

4. Store the mower in a cool, clean, and dry place away from children.
5. Cover the mower to keep it clean and protected.

# Troubleshooting

| Problem | Possible Cause | Corrective Action |
|---|---|---|
| The engine does not start | 1. The wire is not connected to the spark plug. | 1. Connect the wire to the spark plug. |
| | 2. The fuel cap vent hole is plugged. | 2. Clean the fuel cap vent hole or replace the fuel cap. |
| | 3. The spark plug is pitted, fouled, or the gap is incorrect. | 3. Check the spark plug and adjust the gap if necessary. Replace the spark plug if it is pitted, fouled, or cracked. |
| | 4. The fuel tank is empty or the fuel system contains stale fuel. | 4. Drain and/or fill the fuel tank with fresh gasoline. If the problem persists, contact an Authorized Service Dealer. |
| The engine starts hard or loses power | 1. The fuel cap vent hole is plugged. | 1. Clean the fuel cap vent hole or replace the fuel cap. |
| | 2. The air filter element is dirty and is restricting the air flow. | 2. Clean the air filter pre-cleaner and/or replace the paper air filter. |
| | 3. The underside of the machine contains clippings and debris. | 3. Clean under the machine. |
| | 4. The spark plug is pitted, fouled, or the gap is incorrect. | 4. Check the spark plug and adjust the gap if necessary. Replace the spark plug if it is pitted, fouled, or cracked. |
| | 5. The engine oil level is too low, too high, or excessively dirty. | 5. Check the engine oil. Change the oil if it is dirty; add or drain the oil to adjust the oil level to the Full mark on the dipstick. |
| | 6. The fuel tank contains stale fuel. | 6. Drain and fill the fuel tank with fresh gasoline. |
| The engine runs rough | 1. The wire is not connected to the spark plug. | 1. Connect the wire to the spark plug. |
| | 2. The air filter element is dirty and is restricting the air flow. | 2. Clean the air filter pre-cleaner and/or replace the paper air filter. |
| | 3. The spark plug is pitted, fouled, or the gap is incorrect. | 3. Check the spark plug and adjust the gap if necessary. Replace the spark plug if it is pitted, fouled, or cracked. |
| The machine or engine vibrates excessively | 1. The underside of the machine housing contains clippings and debris. | 1. Clean under the machine housing. |
| | 2. The engine mounting bolts are loose. | 2. Tighten the engine mounting bolts. |
| | 3. The blade mounting nuts are loose. | 3. Tighten the blade mounting nuts. |
| | 4. The blade is bent or is out of balance. | 4. Balance the blade. If the blade is bent, replace it. |
| There is an uneven cutting pattern | 1. You are mowing in the same pattern repeatedly. | 1. Change the mowing pattern. |
| | 2. The underside of the machine housing contains clippings and debris. | 2. Clean under the machine housing. |
| | 3. The blade is dull. | 3. Sharpen and balance the blade. |
| The machine does not self-propel | 1. There is debris under the belt cover. | 1. Clean the debris from under the belt cover. |
| | 2. The self-propel drive cable is out of adjustment or is damaged. | 2. Adjust the self-propel drive cable. Replace the cable if necessary. |

# Notes:

# International Distributor List

| Distributor: | Country: | Phone Number: | Distributor: | Country: | Phone Number: |
|---|---|---|---|---|---|
| Agrolanc Kft | Hungary | 36 27 539 640 | Maquiver S.A. | Colombia | 57 1 236 4079 |
| Balama Prima Engineering Equip. | Hong Kong | 852 2155 2163 | Maruyama Mfg. Co. Inc. | Japan | 81 3 3252 2285 |
| B-Ray Corporation | Korea | 82 32 551 2076 | Mountfield a.s. | Czech Republic | 420 255 704 220 |
| Casco Sales Company | Puerto Rico | 787 788 8383 | Mountfield a.s. | Slovakia | 420 255 704 220 |
| Ceres S.A. | Costa Rica | 506 239 1138 | Munditol S.A. | Argentina | 54 11 4 821 9999 |
| CSSC Turf Equipment (pvt) Ltd. | Sri Lanka | 94 11 2746100 | Norma Garden | Russia | 7 495 411 61 20 |
| Cyril Johnston & Co. | Northern Ireland | 44 2890 813 121 | Oslinger Turf Equipment SA | Ecuador | 593 4 239 6970 |
| Cyril Johnston & Co. | Republic of Ireland | 44 2890 813 121 | Oy Hako Ground and Garden Ab | Finland | 358 987 00733 |
| Equiver | Mexico | 52 55 539 95444 | Parkland Products Ltd. | New Zealand | 64 3 34 93760 |
| Femco S.A. | Guatemala | 502 442 3277 | Perfetto | Poland | 48 61 8 208 416 |
| ForGarder OU | Estonia | 372 384 6060 | Pratoverde SRL. | Italy | 39 049 9128 128 |
| G.Y.K. Company Ltd. | Japan | 81 726 325 861 | Prochaska & Cie | Austria | 43 1 278 5100 |
| Geomechaniki of Athens | Greece | 30 10 935 0054 | RT Cohen 2004 Ltd. | Israel | 972 986 17979 |
| Golf international Turizm | Turkey | 90 216 336 5993 | Riversa | Spain | 34 9 52 83 7500 |
| Guandong Golden Star | China | 86 20 876 51338 | Lely Turfcare | Denmark | 45 66 109 200 |
| Hako Ground and Garden | Sweden | 46 35 10 0000 | Solvert S.A.S. | France | 33 1 30 81 77 00 |
| Hako Ground and Garden | Norway | 47 22 90 7760 | Spypros Stavrinides Limited | Cyprus | 357 22 434131 |
| Hayter Limited (U.K.) | United Kingdom | 44 1279 723 444 | Surge Systems India Limited | India | 91 1 292299901 |
| Hydroturf Int. Co Dubai | United Arab Emirates | 97 14 347 9479 | T-Markt Logistics Ltd. | Hungary | 36 26 525 500 |
| Hydroturf Egypt LLC | Egypt | 202 519 4308 | Toro Australia | Australia | 61 3 9580 7355 |
| Irrimac | Portugal | 351 21 238 8260 | Toro Europe NV | Belgium | 32 14 562 960 |
| Irrigation Products Int'l Pvt Ltd. | India | 0091 44 2449 4387 | Valtech | Morocco | 212 5 3766 3636 |
| Jean Heybroek b.v. | Netherlands | 31 30 639 4611 | Victus Emak | Poland | 48 61 823 8369 |

## European Privacy Notice

The Information Toro Collects
Toro Warranty Company (Toro) respects your privacy. In order to process your warranty claim and contact you in the event of a product recall, we ask you to share certain personal information with us, either directly or through your local Toro company or dealer.

The Toro warranty system is hosted on servers located within the United States where privacy law may not provide the same protection as applies in your country.

BY SHARING YOUR PERSONAL INFORMATION WITH US, YOU ARE CONSENTING TO THE PROCESSING OF YOUR PERSONAL INFORMATION AS DESCRIBED IN THIS PRIVACY NOTICE.

The Way Toro Uses Information
Toro may use your personal information to process warranty claims, to contact you in the event of a product recall and for any other purpose which we tell you about. Toro may share your information with Toro's affiliates, dealers or other business partners in connection with any of these activities. We will not sell your personal information to any other company. We reserve the right to disclose personal information in order to comply with applicable laws and with requests by the appropriate authorities, to operate our systems properly or for our own protection or that of other users.

Retention of your Personal Information
We will keep your personal information as long as we need it for the purposes for which it was originally collected or for other legitimate purposes (such as regulatory compliance), or as required by applicable law.

Toro's Commitment to Security of Your Personal Information
We take reasonable precautions in order to protect the security of your personal information. We also take steps to maintain the accuracy and current status of personal information.

Access and Correction of your Personal Information
If you would like to review or correct your personal information, please contact us by email at legal@toro.com.

## Australian Consumer Law

Australian customers will find details relating to the Australian Consumer Law either inside the box or at your local Toro Dealer.

# The Toro Warranty and The Toro GTS Starting Guarantee

## Conditions and Products Covered

The Toro Company and its affiliate, Toro Warranty Company, pursuant to an agreement between them, jointly promise to repair for the original purchaser[1]the Toro Product listed below if defective in materials or workmanship or if the Toro GTS (Guaranteed to Start) engine will not start on the first or second pull, provided the routine maintenance required in the *Operator's Manual* have been performed.

The following time periods apply from the date of purchase:

| Products | Warranty Period |
|---|---|
| Walk Power Mowers | |
| • Cast Deck | 5 years Residential Use[2]<br>90 Days Commercial Use |
| • Engine | 5 years GTS Guarantee, Residential Use[3] |
| • Battery | 2 years |
| • Steel Deck | 2 years Residential Use[2]<br>30 Days Commercial Use |
| • Engine | 2 years GTS Guarantee, Residential Use[3] |
| TimeMaster Mowers | 3 years Residential Use[2]<br>90 Days Commercial Use |
| • Engine | 3 years GTS Guarantee, Residential Use[3] |
| • Battery | 2 years |
| Electric Hand Held Products and Walk Power Mowers | 2 years Residential Use[2]<br>No Warranty for Commercial Use |
| Snowthrowers | |
| • Single Stage | 2 years Residential Use[2]<br>45 Days Commercial Use |
| • Engine | 2 years GTS Guarantee, Residential Use[3] |
| • Two Stage | 3 years Residential Use[2]<br>45 Days Commercial Use |
| • Chute, chute deflector and impeller housing cover | Lifetime (original owner only)[5] |
| Electric Snowthrowers | 2 years Residential Use[2]<br>No Warranty for Commercial Use |
| All Ride-On Units Below | |
| • Engine | See engine manufacturer's warranty[4] |
| • Battery | 2 years Residential Use[2] |
| • Attachments | 2 years Residential Use[2] |
| DH Lawn & Garden Tractors | 2 years Residential Use[2]<br>30 Days Commercial Use |
| XLS Lawn & Garden Tractors | 3 years Residential Use[2]<br>30 Days Commercial Use |
| TimeCutter | 3 years Residential Use[2]<br>30 Days Commercial Use |
| TITAN Mowers | 3 years or 240 hours[5] |
| • Frame | Lifetime (original owner only)[6] |

[1]Original Purchaser means the person who originally purchased the Toro Product.

[2]Residential use means use of the product on the same lot as your home. Use at more than one location is considered commercial use and the commercial use warranty would apply.

[3]The Toro GTS Starting Guarantee does not apply when the product is used commercially.

[4]Some engines used on Toro Products are warranted by the engine manufacturer.

[5]Whichever occurs first.

[6]Lifetime Frame Warranty - If the main frame, consisting of the parts welded together to form the tractor structure that other components such as the engine are secured to, cracks or breaks in normal use, it will be repaired or replaced, at Toro's option, under warranty at no cost for parts and labor. Frame failure due to misuse or abuse and failure or repair required due to rust or corrosion are not covered.

Warranty may be denied if the hour meter is disconnected, altered, or shows signs of being tampered with.

## Owner Responsibilities

You must maintain your Toro Product by following the maintenance procedures described in the *Operator's Manual*. Such routine maintenance, whether performed by a dealer or by you, is at your expense.

## Instructions for Obtaining Warranty Service

If you think that your Toro Product contains a defect in materials or workmanship, follow this procedure:

1. Contact your seller to arrange service of the product. If for any reason it is impossible for you to contact your seller, you may contact any Toro Authorized Distributor to arrange service. See attached Distributor List.
2. Bring the product and your proof of purchase (sales receipt) to the servicing outlet. If for any reason you are dissatisfied with the servicing outlet's analysis or with the assistance provided, contact us at:

   Toro Customer Care Department, RLC Division
   Toro Warranty Company
   8111 Lyndale Avenue South
   Bloomington, MN 55420-1196
   001–952–948–4707

## Items and Conditions Not Covered

There is no other express warranty except for special emission system coverage and engine warranty coverage on some products. This express warranty does not cover the following:

- Cost of regular maintenance service or parts, such as filters, fuel, lubricants, oil changes, spark plugs, air filters blade sharpening or worn blades, cable/linkage adjustments, or brake and clutch adjustments
- Components failing due to normal wear
- Any product or part which has been altered or misused or neglected and requires replacement or repair due to accidents or lack of proper maintenance
- Pickup and delivery charges
- Repairs or attempted repairs by anyone other than an Authorized Toro Service Dealer
- Repairs necessary due to failure to follow recommended fuel procedure (consult *Operator's Manual* for more details)
  - Removing contaminants from the fuel system is not covered
  - Use of old fuel (more than one month old) or fuel which contains more than 10% ethanol or more that 15% MTBE
  - Failure to drain the fuel system prior to any period of non-use over one month
- Repairs or adjustments to correct starting difficulties due to the following:
  - Failure to follow proper maintenance procedures or recommended fuel procedure
  - Rotary mower blade striking an object
- Special operational conditions where starting may require more than two pulls:
  - First time starts after extended period of non-use over three months or seasonal storage
  - Cool temperature starts such as those found in early spring and late autumn
  - Improper starting procedures - if you are having difficulty starting your unit, please check the *Operator's Manual* to ensure that you are using the correct starting procedures. This can save an unnecessary visit to an Authorized Toro Service Dealer.

## General Conditions

The purchaser is covered by the national laws of each country. The rights to which the purchaser is entitled with the support of these laws are not restricted by this warranty.