FORM NO. 3318–141 Rev B

TORO®

MODEL NO. 38005–69000001 & UP

OPERATOR'S MANUAL

1200 POWER CURVE® SNOWTHROWER

IMPORTANT SAFETY INSTRUCTIONS

⚠ WARNING

To assure maximum safety, best performance, and to gain knowledge of the product, it is essential that you or any other operator of the snowthrower read and understand the contents of this manual before the motor is ever started. Pay particular attention to the safety alert symbol ⚠ which means CAUTION, WARNING, OR DANGER — "personal safety instruction." Read and understand the instruction because it has to do with safety. FAILURE TO COMPLY WITH INSTRUCTION MAY RESULT IN PERSONAL INJURY.

SAVE THESE INSTRUCTIONS FOR FUTURE REFERENCE!

BEFORE OPERATING

1. Read and understand the contents of this manual before operating the snowthrower. Become familiar with all controls and know how to stop quickly.

2. Keep everyone, especially children and pets, away from area of operation. Never allow children to operate the snowthrower.

3. Inspect area thoroughly where the snowthrower will be used. Remove doormats, sleds, boards, sticks, wire, and any other foreign objects which might be picked up and thrown by the snowthrower. Never direct discharge towards people.

4. Keep all shields and safety devices in place. If a shield, safety device, or decal is illegible, damaged or lost, repair or replace it before operation is commenced. Also, tighten any loose nuts, bolts, or screws.

5. Wear adequate winter clothing and rubber boots that will assure secure footing on slippery surfaces. Do not wear loose fitting clothing that could possibly get caught in moving parts.

6. Do not use the snowthrower on gravel or crushed rock surfaces unless used in accordance with Operating Instructions; refer to page 5, item 5.

7. ⚠ **WARNING**—To prevent electric shock, use only a UL approved extension cord suitable for outdoor use in cold temperatures (16 gauge minimum). Replace a damaged extension cord immediately.

8. To reduce the risk of electric shock, this appliance has a polarized plug (one blade is wider than the other) (Fig. 3) and will require the use of a polarized extension cord. The appliance plug will fit into a polarized extension cord only one way. If the plug does not fit fully into the extension cord, reverse the plug. If the plug still does not fit, obtain a correct polarized extension cord. A polarized extension cord will require the use of a polarized wall outlet. This plug will fit into the polarized wall outlet only one way. If the plug does not fit fully into the wall outlet, reverse the plug. If the plug still does not fit, contact a qualified electrician to install the proper wall outlet. Do not change the equipment plug, extension cord receptacle, or extension cord plug in any way.

9. To prevent disconnection of snowthrower cord from extension cord during operation, tie extension cord to switch guard before connecting to snowthrower cord; refer to page 4, figure 4 for proper procedures.

WHILE OPERATING

10. Avoid accidental starting. Do not insert key until after the snowthrower is plugged in. Also, remove key before carrying plugged in unit.

11. If cord is damaged in any manner while plugged in, pull extension cord from wall receptacle and replace the cord.

12. Do not abuse cord. Never carry the snowthrower by cord or pull sharply on cord to disconnect from receptacle. Keep cord away from heat, oil, and sharp edges.

13. Operate the snowthrower only when there is good visibility or light. Always maintain secure footing and balance and keep a firm grip on the handle. **DO NOT USE SNOWTHROWER ON A ROOF.**

©The Toro Company–1996, Rev. 1997, 1998
All Rights Reserved

SAFETY INSTRUCTIONS

14. Be attentive when using the snowthrower, and stay alert for holes in the terrain and other hidden hazards.

15. STAY AWAY FROM DISCHARGE OPENING WHILE OPERATING THE SNOWTHROWER. Keep face, hands, feet, and any other part of your body or clothing away from concealed, moving, or rotating parts.

16. Never operate the snowthrower near bystanders, glass enclosures, automobiles and trucks, window wells, or a drop off without proper adjustment of the snow discharge angle: refer to Operating Tips, page 5, item 3.

17. Clear snow from slopes by going up and down; never across the face. Use caution when changing directions. Never clear snow from steep slopes.

18. Do not overload the snowthrower by clearing snow at too fast a rate. Let the unit do the work.

19. If a solid object is hit or the snowthrower vibrates abnormally, stop the snowthrower and wait for all movement to stop. Disconnect extension cord and check the snowthrower immediately for possible damage, an obstruction, or loose parts. Vibration is generally a warning of trouble. Repair any damage before operating the snowthrower again.

20. If snowthrower will be left unattended, disconnect extension cord from receptacle and remove key from handle.

21. Before adjusting, cleaning, repairing, or inspecting the snowthrower, or before unclogging the discharge chute, stop the snowthrower and wait for all moving parts to stop. Also, disconnect extension cord from receptacle to prevent accidental starting.

22. Let snowthrower run for a few minutes after clearing snow so moving parts do not freeze.

MAINTAINING SNOWTHROWER

23. Perform only those maintenance instructions described in this manual. Disconnect cord from receptacle before performing maintenance procedures to prevent the possibility of accidental starting. If major repairs are ever needed, contact your local Authorized TORO Service Dealer for assistance.

24. Keep snowthrower in safe operating condition by keeping nuts, bolts, and screws tight. Check all fasteners frequently to assure they are tight.

25. Store snowthrower indoors when not in use, in a dry, locked−up place out of reach of children. Disconnect extension cord from snowthrower before storing and remove key from handle. Store key in a memorable place.

26. At the time of manufacture, the snowthrower conformed to and exceeded safety standards in effect for snowthrowers. Therefore, to assure optimum performance and safety, purchase genuine TORO replacement parts and accessories to keep the Toro all TORO. NEVER USE “WILL FIT” REPLACEMENT PARTS AND ACCESSORIES.

27. This product is intended for residential household use only.

SAFETY DECALS AND INSTRUCTIONS

Safety and instructions decals are easily visible to the operator and are located near any area of potential danger. Replace any decal that is damaged or lost.



ON SHROUD

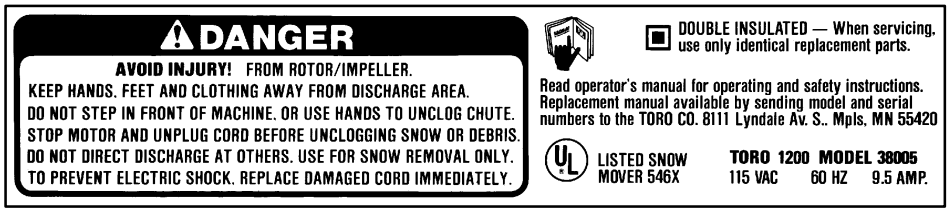

ON REAR OF SHROUD
(Part No. 64−9061)

ASSEMBLY INSTRUCTIONS

⚠ CAUTION

POTENTIAL HAZARD

- **Internal wiring could be damaged during shipping or assembly.**

WHAT CAN HAPPEN

- **Damaged internal wiring COULD CAUSE SERIOUS ELECTRICAL SHOCK RESULTING IN PERSONAL INJURY DURING OPERATION.**

HOW TO AVOID THE HAZARD

- **Thoroughly inspect the open internal wiring before assembling snowthrower (Fig. 1).**
- **Use care so electrical wiring will not be damaged during assembly.**
- **If wiring is damaged before or during assembly, do not assemble or plug in snowthrower. Contact your TORO Service Dealer or TORO Service Center.**

ASSEMBLE UPPER HANDLE

1. Stand snowthrower upright and position upper handle in inverted position to prepare for handle assembly (Fig. 1). Inspect the open internal wiring for damage.

2. Remove two locknuts and carriage bolts from loose parts bag attached to middle handle.

3. Carefully remove shipping tape from handles.

Note: Do not remove bushing from upper handle tube (Fig. 1).

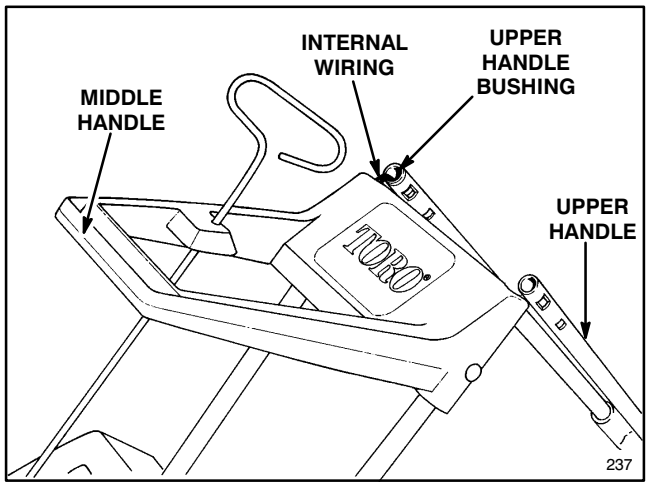

Figure 1

4. Align upper handle with lower and middle handles. Carefully insert upper handle tubes until holes in upper handle are aligned with holes in lower and middle handles.

WARNING: Install carriage bolt through <u>right hand side of handle with fingers only</u> to avoid damaging the electrical cord in handle and causing possible injury. If the internal wiring is blocking the hole, use a blunt object to gently move the wiring to one side. DO NOT FORCE CARRIAGE BOLTS THROUGH HANDLE. DO NOT USE TOOLS UNTIL CARRIAGE BOLTS ARE FULLY INSTALLED IN HANDLE.

5. Install carriage bolts with heads of bolts to the outside of the middle handle (Fig. 2). Screw locknuts onto carriage bolts and tighten assembly. Be sure carriage bolts are completely inserted through middle handle before tightening locknuts.

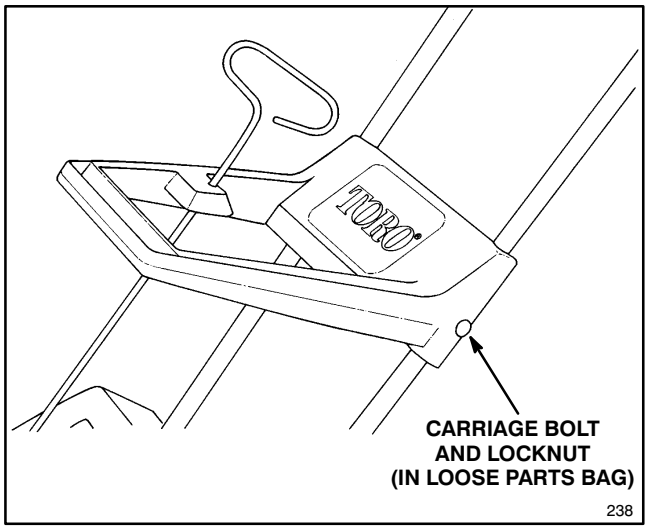

Figure 2

OPERATING INSTRUCTIONS

PREPARATION

The proper extension cord is a requirement for safe and efficient use of your appliance. Use only a UL listed extension cord recommended for outdoor use. Refer to Extension Cord Chart below.

EXTENSION CORD CHART		
If length of extension cord is less than or equal to:	100 ft.	150 ft.
Assure wire size gauge (A.W.G.) in cord is:	16	14

Note: Use of extension cord over 150 feet is not recommended.

⚠ WARNING

POTENTIAL HAZARD

- **Contact with water while operating unit could cause electric shock.**

WHAT CAN HAPPEN

- **Electric shock can cause injury or death.**

HOW TO AVOID THE HAZARD

- **Don't handle plug or appliance with wet hands or while standing in water.**
- **Use only a UL listed extension cord recommended for outdoor cold weather use. Refer to Extension Cord Chart, page 4.**

Your unit has a polarized plug. This means one prong in the Power Shovel cord is larger than the other (Fig. 3). When inserting the end of a suitable extension cord into the Power Shovel cord, be sure to insert the enlarged prong into the wide slot in the extension cord end. See Safety Instructions, item #8, for additional information.

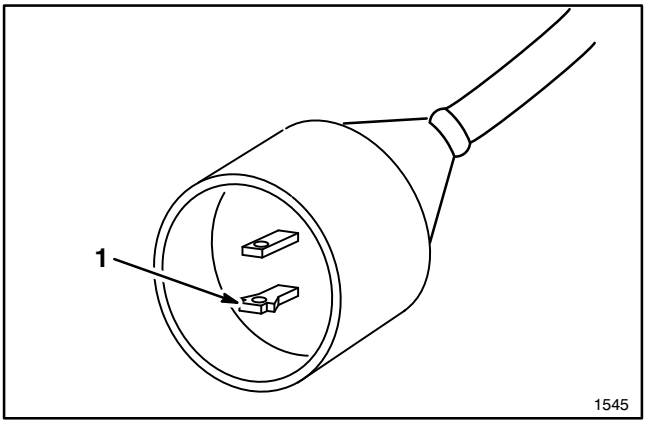

Figure 3

1. Enlarged prong

1. Tie the extension cord to the switch guard before connecting to the snowthrower cord. This prevents separation of the cords during operation (Fig. 4).

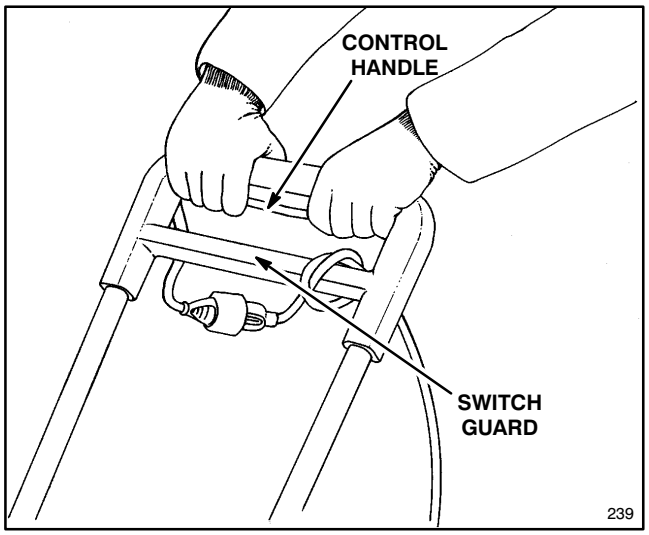

Figure 4

2. Plug the extension cord into a wall outlet. Insert key into hole at rear of handle (Fig. 5).

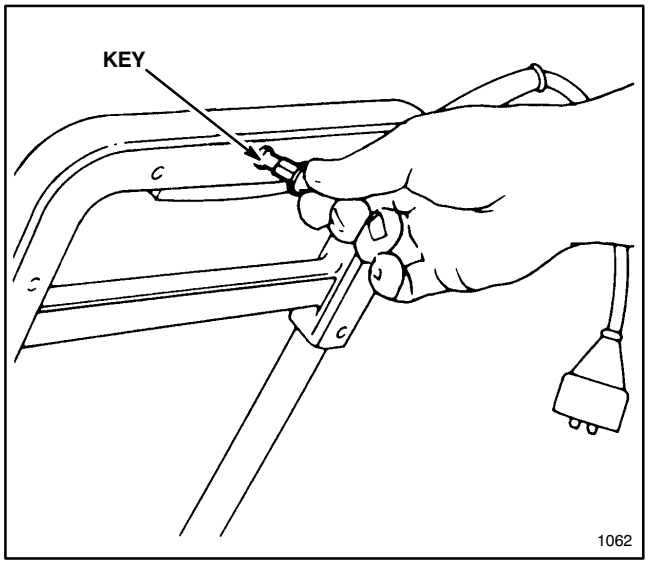

Figure 5

3. Keep the area to be cleared free of stones, toys, or other foreign objects which may be picked up and thrown by the rotor blades. Such items could be covered by snowfall and, therefore, unnoticed until struck by the rotor blades. Always be sure to keep children and pets away from area of operation.

STARTING/STOPPING

To start rotor, make sure key is installed, and squeeze the control handle. To stop, release the control handle (Fig. 4).

OPERATING INSTRUCTIONS

OPERATING TIPS

1. Squeeze the control handle to start the rotor (Fig. 4). The depth and weight of the snow governs the forward speed.

2. Do not tip the snowthrower to self−propel. Push snowthrower along the scraper.

3. Direct the snow to left, right or straight ahead by twisting the vane directional control attached to the middle handle (Fig. 6).

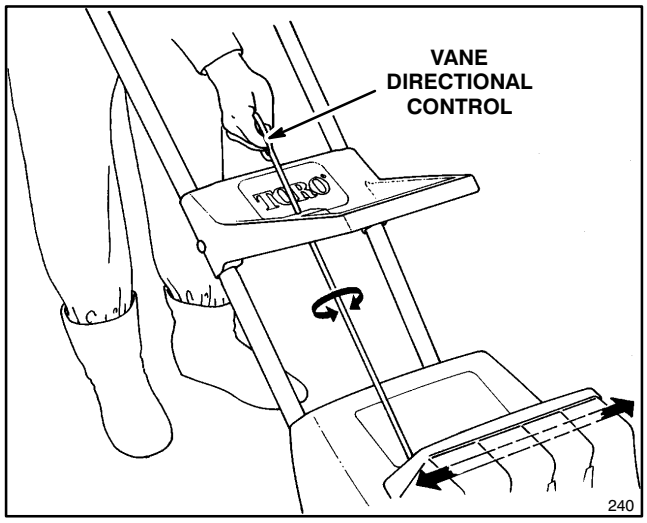

Figure 6

4. For the most efficient snowthrowing, keep vanes parallel, throw snow downwind, and slightly overlap each swath.

5. Should you find it necessary to clear snow from crushed rock or gravel, push down on handle to raise rotor blades clear of loose material that could be thrown by the blades.

6. Hold unit by the upper and middle handles and use a swinging or sweeping motion when clearing steps or deep drifts.

7. Keep cord clear of obstructions, sharp objects, and rotor blades. Do not pull sharply on the cord or abuse it in any manner. Frequently inspect cord for damage. If damaged, replace it.

8. Remove the key and disconnect the extension cord when through using the snowthrower. Keep key in a memorable place so it will not be misplaced. Set the vanes in a vertical position and hang snowthrower up by switch guard for convenient storage and to prevent switch damage (Fig. 7). Hang the extension cord with the snowthrower so it will not be misplaced or possibly damaged (Fig. 7).

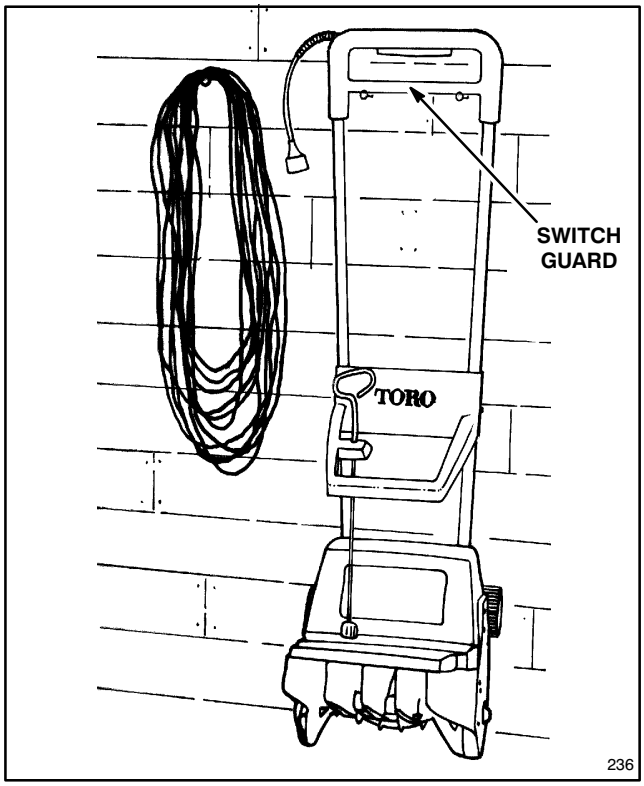

Figure 7

MAINTENANCE

⚠ WARNING

POTENTIAL HAZARD

- **There is the possibility that snowthrower could be inadvertently started when electrical cord is plugged into an electrical socket and key is is handle.**

WHAT CAN HAPPEN

- **Inadvertent starting could cause personal injury to operator or bystanders.**

HOW TO AVOID THE HAZARD

- **Always disconnect extension cord and remove key from handle before attempting any maintenance or repairs.**

LUBRICATING SNOWTHROWER

The 1200 Power Curve® snowthrower does not have to be lubricated as all bearings are lubricated for the life of the product.

PREPARE SNOWTHROWER FOR STORAGE

1. Examine the snowthrower thoroughly for worn, loose, or damaged parts. If parts repair or replacement is necessary, contact your local Authorized TORO Service Dealer for assistance.

2. Examine extension cord thoroughly for signs of excess wear or damage. Replace if worn or damaged.

3. Disconnect the extension cord from the snowthrower before storing and remove key from handle. Store key in a memorable place.

4. Store the snowthrower in a clean, dry place and cover it to provide protection.

TORO SERVICE SUPPORT

If your unit requires service or maintenance, your nearest TORO Master Service Dealer is the best dealer to assist you. Refer to the “Yellow Pages” of your local telephone directory in the section titled “Lawn Mowers.” TORO Master Service Dealers are listed under the TORO trademark. If you need help locating a TORO Master Service Dealer near you, call 1-800-421-9684 for assistance.

PRODUCT IDENTIFICATION

A model and serial number decal is located on the lower right hand tubing. Always refer to specific numbers on the decal in correspondence or when replacement parts are needed.

The Toro Promise

A Full One Year Residential Use Warranty

The Toro Company warrants this TORO Product for one year against defects in material or workmanship. To receive a replacement or repair, at Toro's option, just return the complete unit, postage prepaid, to the seller or any TORO Electric Service Dealer or the TORO Service Center, 5300 Shoreline Blvd., Mound, MN 55364, along with proof of purchase. This warranty covers product defects only. It does not cover incidental or consequential damages. Some states do not allow the exclusion or limitation of incidental or consequential damages, so the above limitation may not apply to you. This warranty gives you specific rights, and you may have other rights which vary from state to state. If all other remedies fail, you may contact us at The Toro Company, Customer Service Department, 8111 Lyndale Ave S, Bloomington, MN, 55420-1196. (Do not return defective product to this address.)

COUNTRIES OTHER THAN THE UNITED STATES, CANADA OR MEXICO

Customers who have purchased TORO products exported from the United States or Canada should contact their TORO Distributor (Dealer) to obtain guarantee policies for your country, province, or state. If for any reason you are dissatisfied with your Distributor's service or have difficulty obtaining guarantee information, contact the TORO importer. If all other remedies fail, you may contact us at The Toro Company.

Rev. 10/24/97