Form No. 3392-931 Rev A

TORO®

Count on it.

Operator's Manual

62in Side Discharge Mower

Groundsmaster® 200, 3320 and 3280-D Series Traction Unit

Model No. 30551—Serial No. 315000001 and Up

Register at www.Toro.com.
Original Instructions (EN)

CE

3392-931 A

Introduction

This product complies with all relevant European directives. For details, please see the Declaration of Incorporation (DOI) at the back of this publication.

⚠ WARNING

CALIFORNIA
Proposition 65 Warning

This product contains a chemical or chemicals known to the State of California to cause cancer, birth defects, or reproductive harm.

This rotary-blade lawn cutting deck is mounted to a ride-on machine and is intended to be used by professional, hired operators in commercial applications. It is primarily designed for cutting grass on well-maintained lawns in parks, sports fields, and on commercial grounds. It is not designed for cutting brush, mowing grass and other growth alongside highways, or for agricultural uses.

Read this information carefully to learn how to operate and maintain your product properly and to avoid injury and product damage. You are responsible for operating the product properly and safely.

You may contact Toro directly at www.Toro.com for product and accessory information, help finding a dealer, or to register your product.

Whenever you need service, genuine Toro parts, or additional information, contact an Authorized Service Dealer or Toro Customer Service and have the model and serial numbers of your product ready. The model and serial numbers are stamped into a plate located on the carrier frame behind the right front castor wheel. Write the numbers in the space provided.

Model No. _____

Serial No. _____

This manual identifies potential hazards and has safety messages identified by the safety alert symbol (Figure 1), which signals a hazard that may cause serious injury or death if you do not follow the recommended precautions.



Figure 1

1. Safety alert symbol

This manual uses 2 words to highlight information. **Important** calls attention to special mechanical information and **Note** emphasizes general information worthy of special attention.

© 2015—The Toro® Company
8111 Lyndale Avenue South
Bloomington, MN 55420

Contact us at www.Toro.com.
Printed in the USA
All Rights Reserved

Contents

Safety 4
- Safe Operating Practices 4
- Toro Mower Safety 5
- Safety and Instructional Decals 7

Setup 9
- 1 Installing the Castor Wheel Assemblies 9
- 2 Installing the Lift Arms 10
- 3 Connecting the Lift Arms to the Cutting Unit 11
- 4 Mounting the PTO Shaft Guard and Connecting the PTO Shaft to the Cutting Unit Gear Box 11
- 5 Installing the Rear Weight 12

Product Overview 13
- Specifications 13
- Attachments/Accessories 13

Operation 13
- Adjusting the Height-of-Cut 13
- Adjusting the Rollers and Gage Wheel 14
- 15
- Checking the Gear Box Lubricant 15
- Greasing the Cutting Unit 15
- Adjusting the Weight Transfer 15
- Using the Grass Deflector 15

Maintenance 16
- Lubrication 16
- Separating the Cutting Unit from the Traction Unit 16
- Mounting the Cutting Unit to the Traction Unit 17
- Servicing the Bushings in the Castor Arms 17
- Servicing the Castor Wheels and Bearings 18
- Checking for a Bent Blade 18
- Removing the Cutting Blade 18
- Inspecting and Sharpening the Blade 19
- Checking and Correcting Mismatch of Blades 20
- Replacing the Grass Deflector 20
- Adjusting the Idler Pulley 21
- Replacing the Drive Belt 21

Troubleshooting 23

Safety

This machine has been designed in accordance with EN ISO 5395:2013 and ANSI B71.4-2012.

Improper use or maintenance by the operator or owner can result in injury. To reduce the potential for injury, comply with these safety instructions and always pay attention to the safety alert symbol, which means CAUTION, WARNING, or DANGER- "personal safety instruction." Failure to comply with the instruction may result in personal injury or death.

Safe Operating Practices

Training

- Read the operator's manual and other training material carefully. Be familiar with the controls, safety signs, and the proper use of the equipment. If the operator or mechanic can not read the language of this manual, it is the owner's responsibility to explain this material to them.
- Become familiar with the safe operation of the equipment, operator controls, and safety signs.
- All operators and mechanics should be trained. The owner is responsible for training the users.
- Never let children or untrained people operate or service the equipment. Local regulations may restrict the age of the operator.
- The owner/user can prevent and is responsible for accidents or injuries occurring to himself or herself, other people, or property.

Preparation

- Evaluate the terrain to determine what accessories and attachments are needed to properly and safely perform the job. Only use accessories and attachments approved by the manufacturer.
- Wear appropriate clothing including hard hat, safety glasses and ear protection. Long hair, loose clothing or jewelry may get tangled in moving parts.
- Inspect the area where the equipment is to be used and remove all objects such as rocks, toys and wire which can be thrown by the machine.
- Check that operator's presence controls, safety switches and shields are attached and functioning properly. Do not operate unless they are functioning properly.

Safe Handling of Fuels

- To avoid personal injury or property damage, use extreme care in handling gasoline. Gasoline is extremely flammable and the vapors are explosive.
- Extinguish all cigarettes, cigars, pipes, and other sources of ignition.
- Use only an approved fuel container.
- Never remove fuel cap or add fuel with the engine running.
- Allow engine to cool before refueling.
- Never refuel the machine indoors.
- Never store the machine or fuel container where there is an open flame, spark, or pilot light such as on a water heater or on other appliances.
- Never fill containers inside a vehicle or on a truck or trailer bed with a plastic liner. Always place containers on the ground away from your vehicle before filling.
- Remove equipment from the truck or trailer and refuel it on the ground. If this is not possible, then refuel such equipment with a portable container, rather than from a fuel dispenser nozzle.
- Keep the nozzle in contact with the rim of the fuel tank or container opening at all times until fueling is complete. Do not use a nozzle lock open device.
- If fuel is spilled on clothing, change clothing immediately.
- Never overfill fuel tank. Replace fuel cap and tighten securely.

Operation

- Never run an engine in an enclosed area.
- Only operate in good light, keeping away from holes and hidden hazards.
- Be sure all drives are in neutral and parking brake is engaged before starting engine. Only start engine from the operator's position. Use seat belts if provided.
- Slow down and use extra care on hillsides. Be sure to travel in the recommended direction on hillsides. Turf conditions can affect the machine's stability. Use caution while operating near drop-offs.
- Slow down and use caution when making turns and when changing directions on slopes.
- Never raise deck with the blades running.
- Never operate with guards not securely in place. Be sure all interlocks are attached, adjusted properly, and functioning property.
- Do not change the engine governor setting or overspeed the engine.
- Stop on level ground, lower the cutting units, disengage drives, engage parking brake (if provided), shut off engine before leaving the operator's position for any reason.
- Stop equipment and inspect the blades after striking objects or if an abnormal vibration occurs. Make necessary repairs before resuming operations.
- Keep hands and feet away from the cutting units.
- Look behind and down before backing up to be sure of a clear path.
- Never carry passengers and keep pets and bystanders away.

- Slow down and use caution when making turns and crossing roads and sidewalks. Stop blades if not mowing.
- Do not operate the mower under the influence of alcohol or drugs.
- Lightning can cause severe injury or death. If lightning is seen or thunder is heard in the area, do not operate the machine; seek shelter.
- Use care when loading or unloading the machine into a trailer or truck.
- Use care when approaching blind corners, shrubs, trees, or other objects that may obscure vision.
- The operator shall turn on flashing warning lights, if provided, whenever traveling on a public road, except where such use is prohibited by law.

Maintenance and Storage

- Disengage drives, lower the cutting units, move traction pedal to Neutral, set parking brake, stop engine and remove key. Wait for all movement to stop before adjusting, cleaning or repairing.
- Clean grass and debris from cutting units, drives, mufflers, and engine to help prevent fires. Let engine cool before storing and do not store near flame. Clean up oil or fuel spillage.
- Let engine cool before storing and do not store near flame.
- Shut off fuel while storing or transporting. Do not store fuel near flames or drain indoors.
- Park machine on level ground. Never allow untrained personnel to service machine.
- Use jack stands to support components when required.
- Carefully release pressure from components with stored energy.
- Disconnect battery before making any repairs. Disconnect the negative terminal first and the positive last. Reconnect positive first and negative last.
- Use care when checking blades. Wrap the blades or wear gloves, and use caution when servicing them. Only replace blades. Never straighten or weld them.
- Keep hands and feet away from moving parts. If possible, do not make adjustments with the engine running.
- Charge batteries in an open well ventilated area, away from spark and flames. Unplug charger before connecting or disconnecting from battery. Wear protective clothing and use insulated tools.
- Keep all parts in good working condition and all hardware tightened. Replace all worn or damaged decals.

Hauling

- Use care when loading or unloading the machine into a trailer or truck.
- Use full width ramps for loading machine into trailer or truck.
- Tie the machine down securely using straps, chains, cable, or ropes. Both front and rear straps should be directed down and outward from the machine

Toro Mower Safety

The following list contains safety information specific to Toro products or other safety information that you must know that is not included in the CEN, ISO, or ANSI standard.

This product is capable of amputating hands and feet and throwing objects. Always follow all safety instructions to avoid serious injury or death.

Use of this product for purposes other than its intended use could prove dangerous to user and bystanders.

- Know how to stop the engine quickly.
- Do not operate the machine while wearing tennis shoes or sneakers.
- Wearing substantial safety shoes and long pants is advisable and required by some local ordinances and insurance regulations.
- Handle fuel carefully. Wipe up any spills.
- Check the safety interlock switches daily for proper operation. If a switch should fail, replace the switch before operating the machine.
- Using the machine demands attention. To prevent loss of control:
  - Do not drive close to sand traps, ditches, creeks, embankments, or other hazards.
  - Avoid sudden stops and starts.
  - When near or crossing roads, always yield the right-of-way.
  - Lower the cutting unit when going down slopes.
- The grass deflector must always be installed and in the lowest position on the side discharge cutting unit. Never operate the mower without the deflector or entire grass collector.
- If the cutting unit discharge area ever plugs, shut the engine off before removing the obstruction.
- Cut grass slopes carefully. Do not start, stop, or turn suddenly.
- Do not touch the engine or muffler while the engine is running or soon after it has stopped because these areas could be hot enough to cause burns.

Maintenance and Storage

- Check the blade mounting bolts frequently to be sure that they are tightened to specification.

- Make sure that all hydraulic line connectors are tight and all hydraulic hoses and lines are in good condition before applying pressure to the system.
- Keep your body and hands away from pin hole leaks or nozzles that eject hydraulic fluid under high pressure. Use paper or cardboard, not your hands, to search for leaks. Hydraulic fluid escaping under pressure can have sufficient force to penetrate the skin and cause serious injury.
- Before disconnecting or performing any work on the hydraulic system, all pressure in the system must be relieved by stopping the engine and lowering the cutting units to the ground.
- If the engine must be running to perform a maintenance adjustment, keep hands, feet, clothing, and any parts of the body away from the cutting units, attachments, and any moving parts. Keep everyone away.
- Do not overspeed the engine by changing governor settings. To ensure safety and accuracy, have an Authorized Toro Distributor check the maximum engine speed with a tachometer.
- The engine must be shut off before checking the oil or adding oil to the crankcase.
- Make sure that the mower fuel tank is empty if the machine is to be stored in excess of 30 days. Do not store the mower near any open flame or where gasoline fumes may be ignited by a spark.
- Perform only those maintenance instructions described in this manual. If major repairs are ever needed or if assistance is desired, contact an Authorized Toro Distributor.
- To make sure of optimum performance and continued safety certification of the machine, use only genuine Toro replacement parts and accessories. Replacement parts and accessories made by other manufacturers could be dangerous, and such use could void the product warranty.

Safety and Instructional Decals

Safety decals and instructions are easily visible to the operator and are located near any area of potential danger. Replace any decal that is damaged or lost.

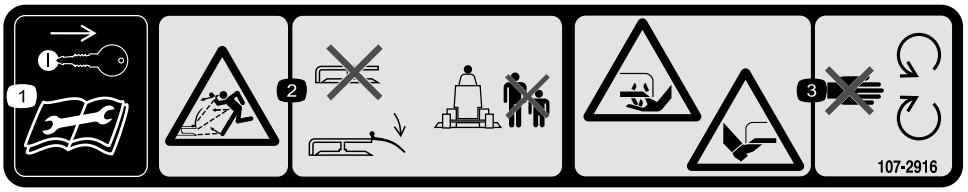

107-2916

1. Remove the ignition key and read the *Operator's Manual* before servicing or performing maintenance.
2. Thrown object hazard—do not operate the mower with the deflector up or removed, keep the deflector in place; keep bystanders a safe distance from the machine.
3. Cutting/dismemberment hazard of hand or foot, mower blade—stay away from moving parts.

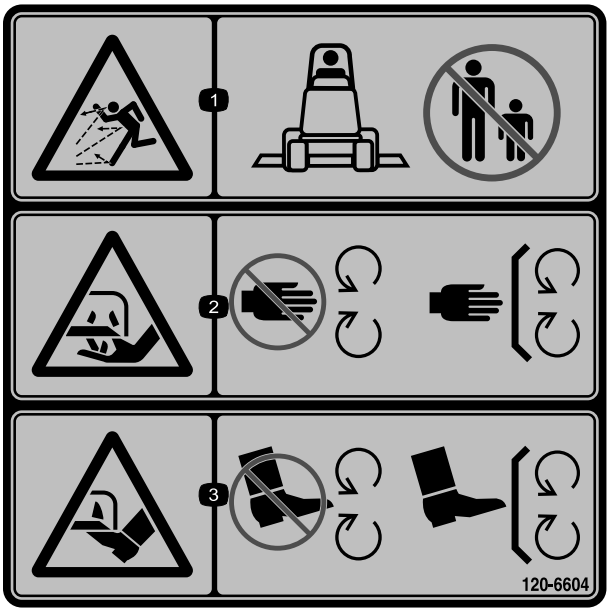

120-6604

1. Thrown object hazard—keep bystanders away from the machine.
2. Cutting/dismemberment hazard of hand, mower blade—stay away from moving parts, keep all guards and shields in place.
3. Cutting/dismemberment hazard of foot, mower blade—stay away from moving parts, keep all guards and shields in place.

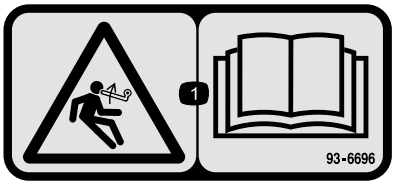

93-6696

1. Stored energy hazard—read the *Operator's Manual*.



93-6697

1. Read the *Operator's Manual*.
2. Check the oil every 50 hours. Add SAE 80w-90 (API GL-5) oil if needed.

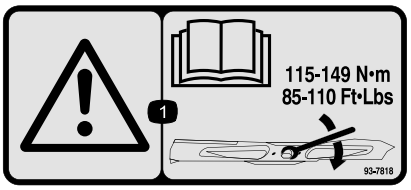

93-7818

1. Warning—read the *Operator's Manual* for instructions on torquing the blade bolt/nut to 115-149 N-m (85-110 ft-lb).

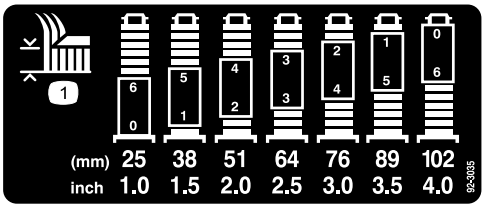

92–3035

1. Height-of-cut

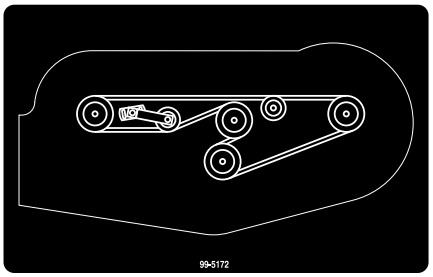

99–5172

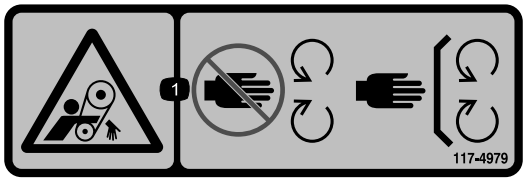

117–4979

1. Entanglement hazard, belt—stay away from moving parts, keep all guards and shields in place.

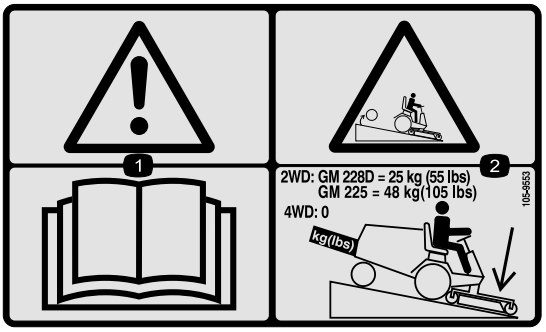

105–9553

1. Warning—read the *Operator's Manual.*
2. Tipping hazard—lower the cutting unit when driving down slopes. For 2 wheel drive units, add a 25 kg (55 lb.) rear weight to GM 228D units and a 48 kg (105 lb.) rear weight to GM 225 units. For 4 wheel drive units, do not add weight.

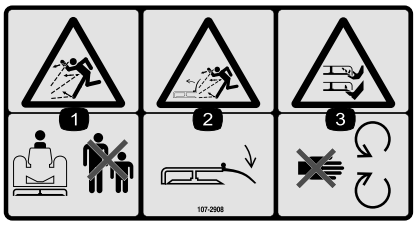

107-2908

1. Thrown object hazard—keep bystanders a safe distance from the machine.
2. Thrown object hazard—do not operate the mower with the deflector up or removed, keep the deflector in place.
3. Cutting/dismemberment hazard of hand or foot, mower blade—stay away from moving parts.



107-2915

1. Entanglement hazard, shaft-keep bystanders a safe distance from the machine.

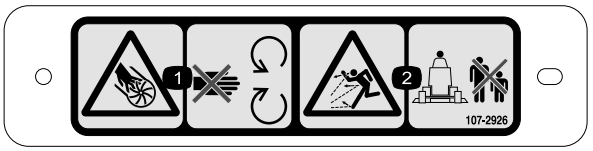

107-2926

1. Cutting/dismemberment hazard, impeller—stay away from moving parts.
2. Thrown object hazard—keep bystanders a safe distance from the machine.



93–7301

1. Warning-read the *Operator's Manual.*
2. Thrown object hazard-stay away from moving parts; keep all guards and shields in place.

Setup

Loose Parts

Use the chart below to verify that all parts have been shipped.

Procedure	Description	Qty.	Use
1	Front castor wheel assembly Rear castor wheel assembly	2 2	Install the castor wheel assemblies.
2	Right-hand lift arm Left-hand lift arm Pivot pin Cotter pin (5/32 x 1-3/4 inches)	1 1 2 2	Install the lift arms.
3	No parts required	–	Connect the lift arms to the cutting unit.
4	No parts required	–	Mount the PTO shaft guard and connect the PTO shaft to the cutting unit gear box.
5	No parts required	–	Install the rear weight.

Media and Additional Parts

Description	Qty.	Use
Parts Catalog Operator's Manual	1 1	Review the material and save in an appropriate place:

⚠ DANGER

If the engine is started and the PTO shaft is allowed to rotate, serious injury could result.

Do not start the engine and engage the PTO lever when the PTO shaft is not connected to the gear box on the cutting unit.

Note: Determine the left and right sides of the machine from the normal operating position.

Note: When installing the 62 inch deck onto a Groundsmaster 200 Series traction unit, the Weight Transfer Kit, Toro Part Number 70-8100 must be installed.

1

Installing the Castor Wheel Assemblies

Parts needed for this procedure:

2	Front castor wheel assembly
2	Rear castor wheel assembly

Procedure

The thrust washers, spacers, and tensioning caps have been installed on the castor wheel spindles for shipping.

1. Remove the tensioning caps from the spindle shafts and slide off the spacers and thrust washers (Figure 2 and Figure 3).

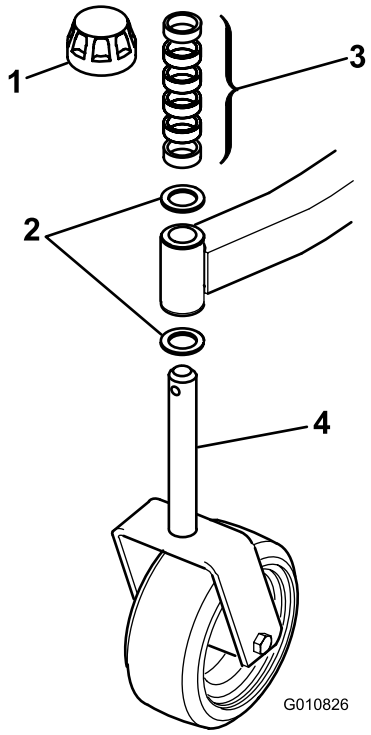

Figure 2

Front Castor Wheel Assembly

1. Tensioning cap
2. Thrust washers
3. Spacers
4. Front castor spindle

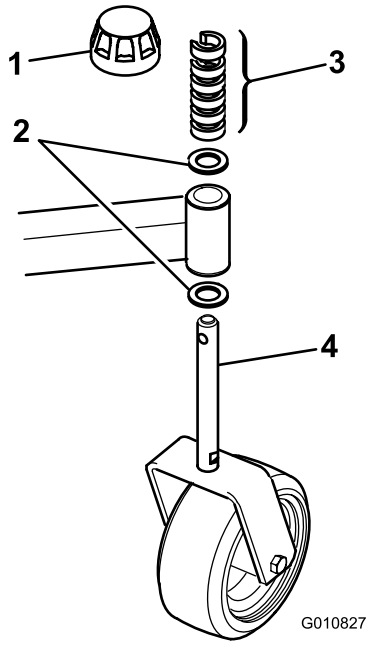

Figure 3

Rear Castor Wheel Assembly

1. Tensioning cap
2. Thrust washers
3. Spacers
4. Rear castor spindle

2. Slide the spacers onto the castor spindle to get the desired height-of-cut; refer to the chart in Adjusting the Height-of-Cut in the Operation section.
3. Slide a thrust washer onto the spindle, push the round castor spindle through the front castor arm, and the hex castor spindle through the rear castor arm.
4. Install another thrust washer and the remaining spacers onto the spindle and install the tensioning cap to secure the assembly.

   Important: The thrust washers, not the spacers, must contact the top and bottom of the castor arm.
5. Ensure that all four castor wheels are set at the same height-of-cut and roll the cutting unit off of the pallet.

2

Installing the Lift Arms

Parts needed for this procedure:

1	Right-hand lift arm
1	Left-hand lift arm
2	Pivot pin
2	Cotter pin (5/32 x 1-3/4 inches)

Procedure

1. On one side of the traction unit, loosen (do not remove) the wheel nuts that secure the wheel and tire assembly to the front wheel studs.
2. Jack up the machine until the front wheel is off the floor.

   Note: Use jack stands or block the machine to prevent it from accidentally falling.
3. Remove the wheel nuts and slide the wheel and tire assembly off the studs.
4. Mount a lift arm (with the ball joint end positioned outward) to the pivot bracket with a pivot pin and a cotter pin (5/32 x 1-3/4 inches) (Figure 4).

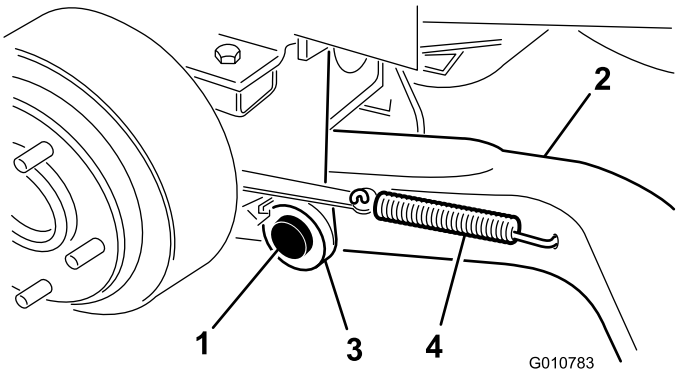

Figure 4

1. Pivot pin
2. Lift arm
3. Lift arm pivot bracket
4. Brake return spring

5. Mount the rear of the lift arm to the lift cylinder with a pivot pin and 2 cotter pins (supplied with the traction unit).
6. Hook the brake return spring to the hole in the lift arm (Figure 4).
7. Repeat the procedure on the opposite side of the machine.

3

Connecting the Lift Arms to the Cutting Unit

No Parts Required

Procedure

1. Move the cutting unit into position in front of the traction unit.
2. Measure the distance from the end of each lift arm to the center of the ball joint (grease fitting). The distance should be 2-1/4 inches (57 mm) (Figure 5).

   Note: If the distance is not 2-1/4 inches (57 mm), loosen the jam nut that secures the ball joint to the lift arm and rotate the ball joint in or out until the distance is attained. Do not tighten the jam nuts at this time.

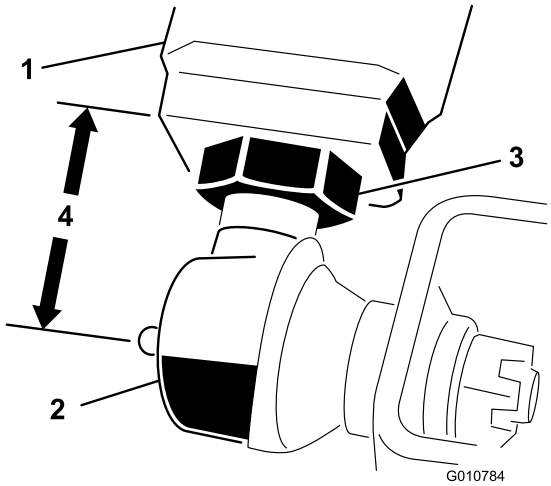

Figure 5

1. Lift arm
2. Ball joint
3. Jam nut
4. 2–1/4 inch (57 mm)

3. Move the lift lever to the Float position. Push the lift arms down until the holes in the ball joint mounts lineup with the holes in the castor arms.

   Note: On the Groundsmaster 3280–D and 3320 the engine must be running to lower the lift arms.

4. Secure the ball joint mounts to each castor arm with 2 capscrews (7/16 x 3 inches) and flange nuts (7/16 inches) (Figure 6).

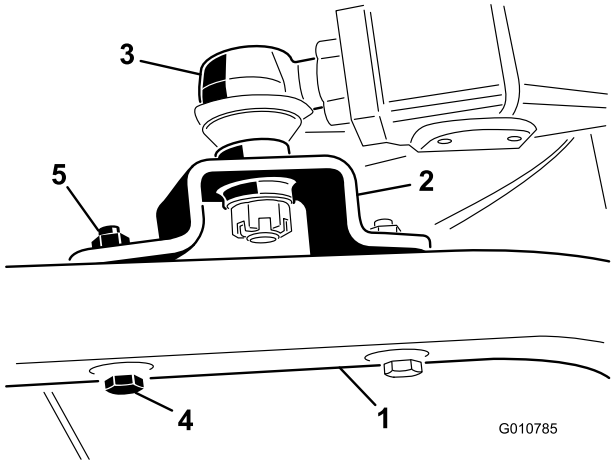

Figure 6

1. Castor arm
2. Ball joint mount
3. Ball joint
4. Capscrew
5. Flange nut

   Note: The ball joint mount should be above the castor arm when it is assembled.

5. Tighten the large jam nut that secures the ball joint to the lift arm (Figure 6).

   Note: When tightening the jam nut, hold the ball joint straight to permit proper oscillation during raising and lowering of the cutting unit.

4

Mounting the PTO Shaft Guard and Connecting the PTO Shaft to the Cutting Unit Gear Box

No Parts Required

Procedure

1. Remove the 2 capscrews and lock washers that secure the PTO guard mounting brackets to the gear box (Figure 7).

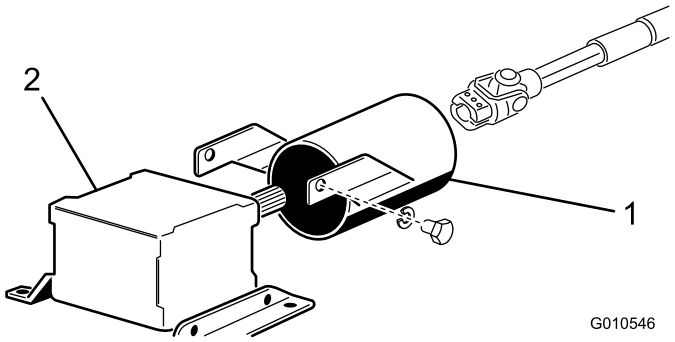

Figure 7

1. PTO guard
2. Gear box

Note: Retain the fasteners for future installation.

2. Slide the PTO shaft guard onto the PTO shaft, positioning the guard as shown in Figure 7.
3. Slide the male PTO shaft into the female PTO shaft.

   Note: Align the mounting holes in the gear case input shaft with the holes in the PTO shaft and slide them together.
4. Secure them with a roll pin.
5. Tighten the capscrews and nuts.
6. Attach the PTO shaft guard to the gearbox with the 2 capscrews and lock washers previously removed.

5

Installing the Rear Weight

No Parts Required

Procedure

Two Wheel Drive Groundsmaster 1000 and 200 Series traction units comply with CEN standard EN 836:1997, ISO standard 5395:1990 and the ANSI B71.4-2012 Standard when equipped with rear weight. Refer to the chart in the traction unit *Operator's Manual* to determine the combinations of weight required. Order the parts from your local Authorized Toro Distributor.

Four Wheel Drive Groundsmaster 200 Series traction units do not need additional rear weight to comply with CEN standard EN 836:1997, ISO standard 5395:1990 and the ANSI B71.4-2012 Standard.

Two Wheel Drive Groundsmaster 3280-D and Groundsmaster 3320 traction units with serial numbers 250000101 through 259999999 comply with CEN standard EN836:1997, ISO standard 5395:1990 and the ANSIB71.4-2012 Standard when equipped with the rear weight kit, part number 24-5780.

Two Wheel Drive Groundsmaster 3280-D and Groundsmaster 3320 traction units with serial numbers 260000101 and up do not need additional rear weight to comply with CEN standard EN 836:1997, ISO standard 5395:1990 and the ANSI B71.4-2012 Standard.

Four Wheel Drive Groundsmaster 3280-D traction units do not need additional rear weight to comply with CEN standard EN 836:1997, ISO standard 5395:1990 and the ANSI B71.4-2012 Standard.

Product Overview

Specifications

Note: Specifications and design are subject to change without notice.

Width of Cut	1.56 m (61-5/8 inches)
Height of Cut	Adjustable from 25 to 102 mm (1 to 4 inches) in 13 mm (1/2 inch) increments
Blade Tip Speed	15,480 ft/minute @ 3250 engine RPM
Cutting Blades	3 heat-treated steel blades, each 4.8 mm (3/16 inch) thick and 55 cm (24-3/4 inches) long
Castor Wheels	203 mm (8 inch) diameter greaseable roller bearings (inflated to 241-345 kPa [35-50 psi])
Drive System	PTO driven gear box transmits power through a "AA" section belt to all blade spindles.
Net Weight	244 kg (539 lb)

Attachments/Accessories

A selection of Toro approved attachments and accessories is available for use with the machine to enhance and expand its capabilities. Contact your Authorized Service Dealer or Distributor or go to www.Toro.com for a list of all approved attachments and accessories.

Operation

Note: Determine the left and right sides of the machine from the normal operating position.

Adjusting the Height-of-Cut

The height-of-cut is adjustable from 25 to 102 mm (1 to 4 inches) in 13 mm (1/2 inch) increments, by adding or removing an equal number of spacers on the front and rear castor forks. The height-of-cut chart below gives the combinations of spacers to use for all height-of-cut settings.

Height-of-Cut Setting	Spacers Below Castor Arm	
	Front	Rear
25 mm (1 inch)	0	0
38 mm (1-1/2 inches)	1	1
51 mm (2 inches)	2	2
64 mm (2-1/2 inches)	3	3
76 mm (3 inches)	4	4
89 mm (3-1/2 inches)	5	5
102 mm (4 inches)	6	6

1. Start the engine and raise the cutting unit so that the height-of-cut can be changed.
2. Stop the engine after the cutting unit is raised.

Adjusting the Front Castor Wheels

1. Remove the tensioning cap from the spindle shaft and slide the spindle out of the front castor arm (Figure 8).

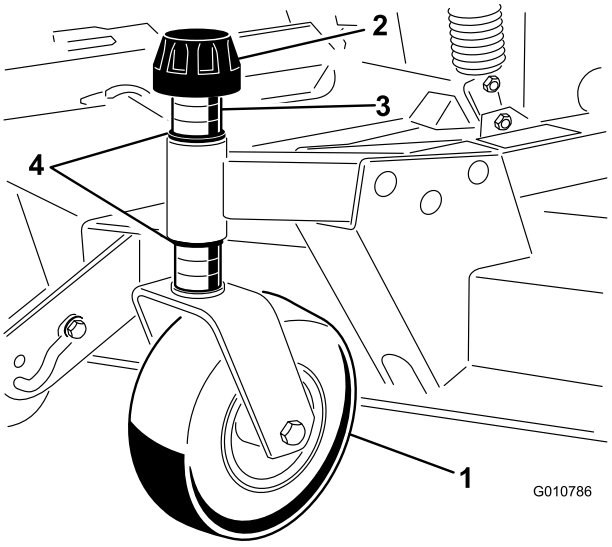

Figure 8

1. Front castor wheel
2. Tensioning cap
3. Spacers
4. Thrust washers

2. Remove the washer from the spindle shaft.
3. Slide the spacers onto the spindle shaft to get the desired height-of-cut, then slide the washer onto the shaft.
4. Push the castor spindle through the front castor arm.
5. Install the other thrust washer and remaining spacers onto the spindle.
6. Install the tensioning cap to secure the assembly.

Adjusting the Rear Castor Wheels

1. Remove the tensioning cap securing the gage wheel to the cutting unit brackets (Figure 9).

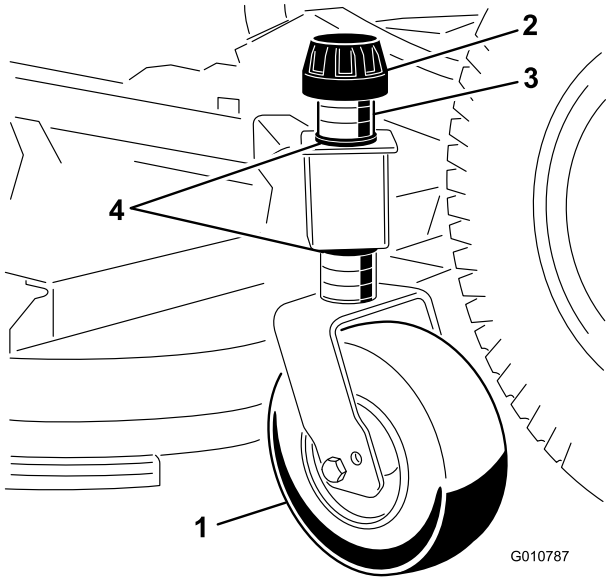

Figure 9

1. Rear castor wheel
2. Tensioning cap
3. Spacers
4. Thrust washers

2. Remove or add "C" shaped spacers at the narrow portion of the spindle shaft, below the castor arm, to get the desired height-of-cut.

   Note: Ensure that the thrust washers, not the spacers, contact the top and bottom of the castor arm.
3. Install the tensioning cap to secure the assembly.

   Note: Ensure that all four castor wheels are set at the same height-of-cut.

Adjusting the Rollers and Gage Wheel

Note: If the cutting unit is to be used in the 25 mm (1 inch) or 38 mm (1-1/2 inches) height-of-cut setting, the cutting unit rollers must be repositioned in the top bracket holes.

Adjusting the Front Roller

1. Remove the capscrew and nut securing the roller shaft to the cutting unit bracket (Figure 10).

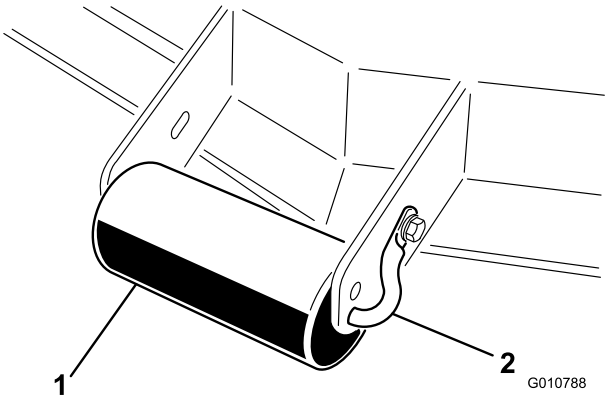

Figure 10

1. External roller
2. Roller shaft

2. Slide the shaft out of the lower bracket holes, align the roller with the top holes, and install the shaft.
3. Secure the roller shaft to the cutting unit bracket with the capscrew and nut.

Adjusting the Front Gage Wheel

1. Remove the capscrew and nut securing the gage wheel to the cutting unit brackets (Figure 11).

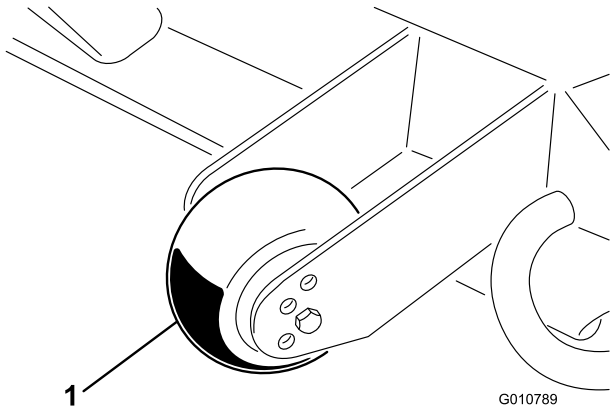

Figure 11

1. Gage wheel

2. Align the roller and spacer with the top holes in the brackets and secure them with the capscrew and nut.

Adjusting the Rear (Internal) Rollers

1. Remove the cotter pins securing the roller shafts to the brackets on the underside of the deck (Figure 12).

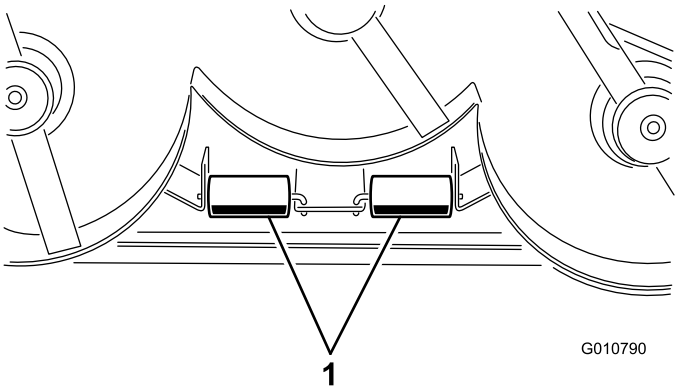

Figure 12

1. Internal rollers

2. Slide the shafts out of the lower bracket holes, align the rollers with the top holes, and install the shafts.
3. Install the cotter pins to secure the assemblies.

Checking the Gear Box Lubricant

The gear box is designed to operate on SAE 80-90 wt. gear lube. Although the gear box is shipped with lubricant from the factory, check the level before operating the cutting unit.

1. Position the machine and cutting unit on a level surface.
2. Remove the dipstick/fill plug from the top of the gear box (Figure 13) and ensure that the lubricant is between the marks on the dipstick. If the lubricant level is low, add enough lubricant until the level is between the marks.

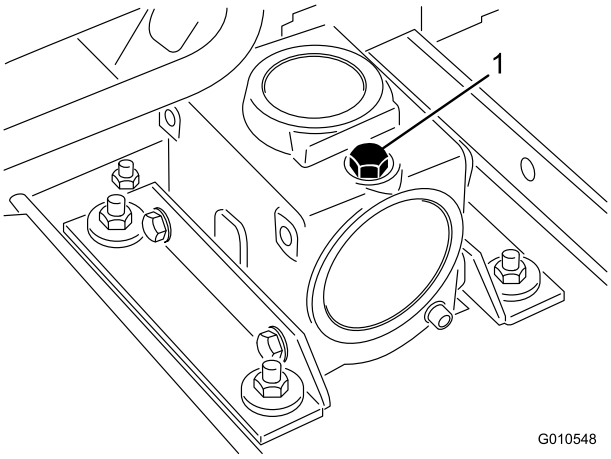

Figure 13

1. Dipstick/fill plug

Greasing the Cutting Unit

Before the cutting unit is operated, it must be greased to ensure proper lubricating characteristics; refer to Lubrication Section of Manual. Failure to properly grease the cutting unit will result in premature failure of critical parts.

Adjusting the Weight Transfer

On Groundsmaster 3280-D and 3320 models only, refer to the traction unit *Operator's Manual* for the procedure to adjust the counterbalance pressure for best performance.

Using the Grass Deflector

⚠ DANGER

Without the grass deflector mounted in place, you and others are exposed to blade contact and thrown debris. Contact with the rotating mower blade(s) and thrown debris will cause injury or death.

- **Never remove the grass deflector from the mower because the grass deflector routes material down toward the turf. If the grass deflector is ever damaged, replace it immediately.**
- **Never put your hands or feet under the mower.**
- **Never operate the mower with the deflector removed from the cutting unit or tied/blocked in a raised position.**

Note: The deflector is spring loaded into its downward normal operating position (Figure 14), but the operator can temporarily swing it out of the way to facilitate loading in a trailer or when otherwise necessary.

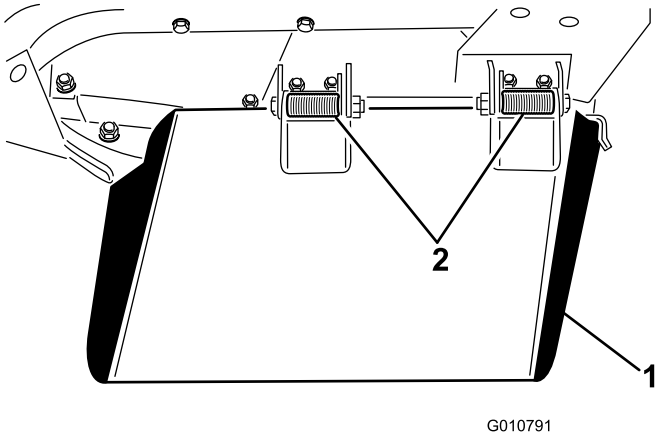

Figure 14

1. Grass deflector
2. Spring hinges

Maintenance

Lubrication

The cutting unit must be lubricated regularly. If the machine is operated under normal conditions, lubricate the castor bearings and bushings with No. 2 general purpose lithium base grease or molybdenum base grease after every 8 hours of operation or daily, whichever comes first. All other bearings, bushings, and the gear box must be lubricated after every 50 hours of operation.

1. Lubricate the following areas:
   - Front castor spindle bushings (Figure 15)
   - Front and rear castor wheel bearings (Figure 15)

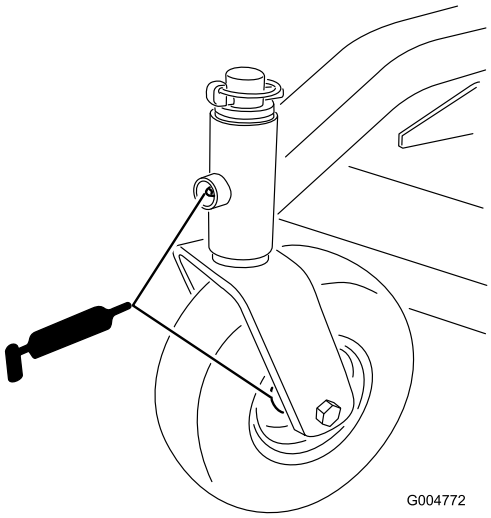

Figure 15

   - Right and left lift arm pivot pins (Figure 16)

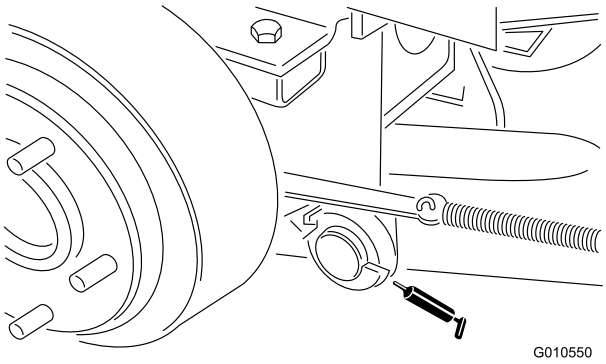

Figure 16

   - Blade spindle bearings (Figure 17)

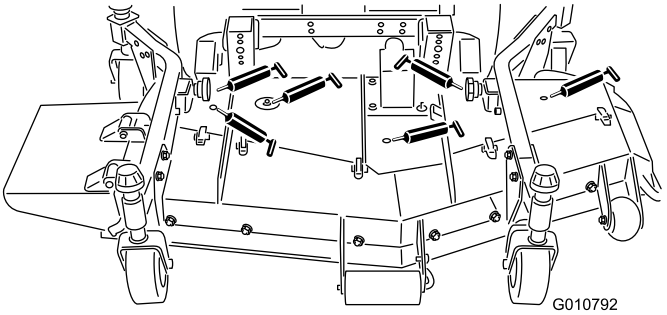

Figure 17

   - Right and left push arm ball joints (Figure 17)
2. Position the machine and cutting unit on a level surface and lower the cutting unit.
3. Remove the dipstick/fill plug from the top of the gear box (Figure 18) and ensure that the lubricant is between the marks on the dipstick.

   Note: If the lubricant level is low, add SAE 80-90 wt. gear lube until the level is between the marks.

   Alternative Synthetic Oil: Mobilube SHC 75W-90

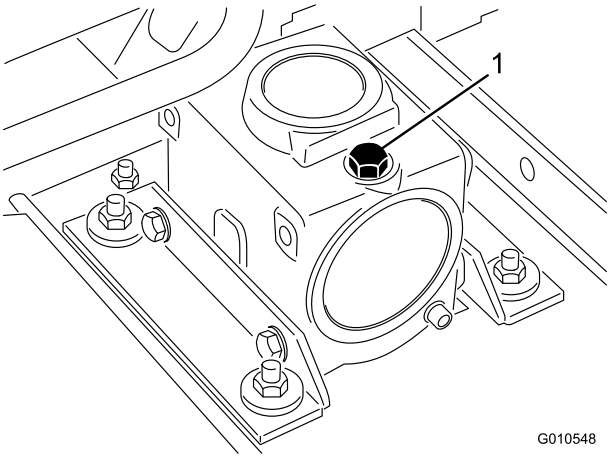

Figure 18

1. Fill/check plug

Separating the Cutting Unit from the Traction Unit

1. Position the machine on a level surface.
2. Raise the cutting unit, engage the parking brake, put the traction pedal in neutral, set the PTO lever in the Off position, shut the engine off, and remove the ignition key.
3. Position the machine on a level surface, lower the cutting unit to the floor, move the lift lever to the float position, shut the engine off, and engage the parking brake.

4. Remove the capscrews and locknuts securing the ball joint mounts to the castor arms on the cutting unit (Figure 19).

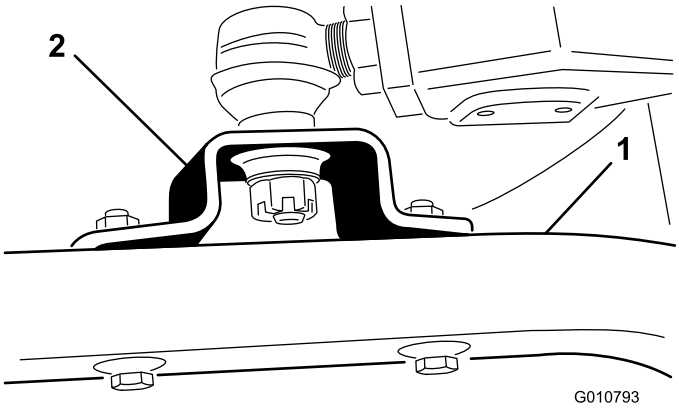

Figure 19

1. Castor arm
2. Ball joint mount

5. Roll the cutting unit away from the traction unit, separating the male and female sections of the PTO shaft (Figure 20).

⚠ DANGER

If the engine is started and the PTO shaft is allowed to rotate, serious injury could result.

Do not start the engine and engage the PTO lever when the PTO shaft is not connected to the gear box on the cutting unit.

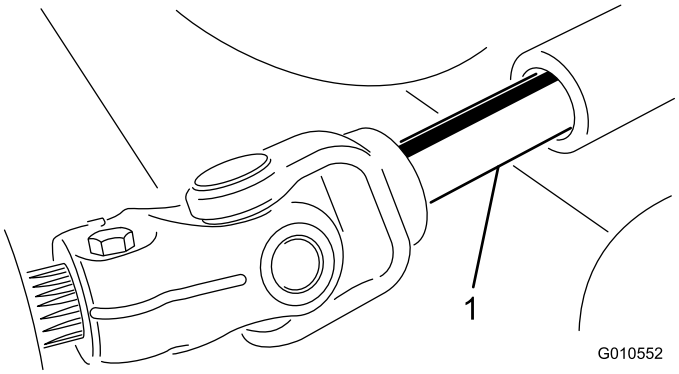

Figure 20

1. PTO shaft

Mounting the Cutting Unit to the Traction Unit

1. Position the machine on a level surface and shut the engine off.
2. Move the cutting unit into position in front of the traction unit.
3. Slide the male PTO shaft into the female PTO shaft (Figure 20).
4. Move the lift lever to the Float position. Push the lift arms down until the holes in the ball joint mounts lineup with the holes in the castor arms (Figure 19).
5. Secure the ball joint mounts to the castor arms with the capscrews and flange nuts.

Servicing the Bushings in the Castor Arms

The castor arms have bushings pressed into the top and bottom portion of the tube which, after many hours of operation, will wear. To check the bushings, move the castor fork back and forth and from side to side. If the castor shaft is loose inside the bushings, the bushings are worn and must be replaced.

1. Raise the cutting unit so that the wheels are off the floor and block it so that it cannot accidentally fall.
2. Remove the tensioning cap, spacer(s), and thrust washer from the top of the castor spindle.
3. Pull the castor spindle out of the mounting tube. Allow the thrust washer and spacer(s) to remain on the bottom of the spindle.
4. Insert a pin punch into the top or bottom of the mounting tube, and drive the bushing out of the tube (Figure 21). Also, drive the other bushing out of the tube.

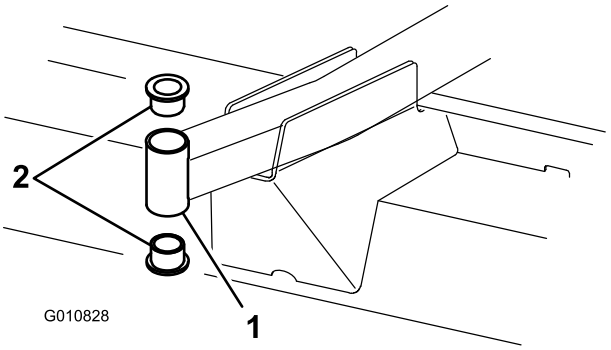

Figure 21

1. Front castor arm tube
2. Bushings

5. Clean the inside of the mounting tubes to remove any dirt.
6. Apply grease to the inside and outside of the new bushings.
7. Use a hammer and flat plate to drive the bushings into the mounting tube.
8. Inspect the castor spindle for wear, and replace it if it is damaged.
9. Push the castor shaft through the bushings and mounting tube.
10. Slide the thrust washer and spacer(s) onto the spindle.
11. Install the tensioning cap on the castor spindle to retain all of the parts in place.

Servicing the Castor Wheels and Bearings

The castor wheel rotates on a high-quality roller bearing and is supported by a spanner bushing. Even after many hours of use, provided that the bearing was kept well lubricated, bearing wear will be minimal. However, failing to keep the bearing lubricated will cause rapid wear. A wobbly castor wheel usually indicates a worn bearing.

1. Remove the locknut from the capscrew holding the castor wheel assembly between the castor fork (Figure 22).

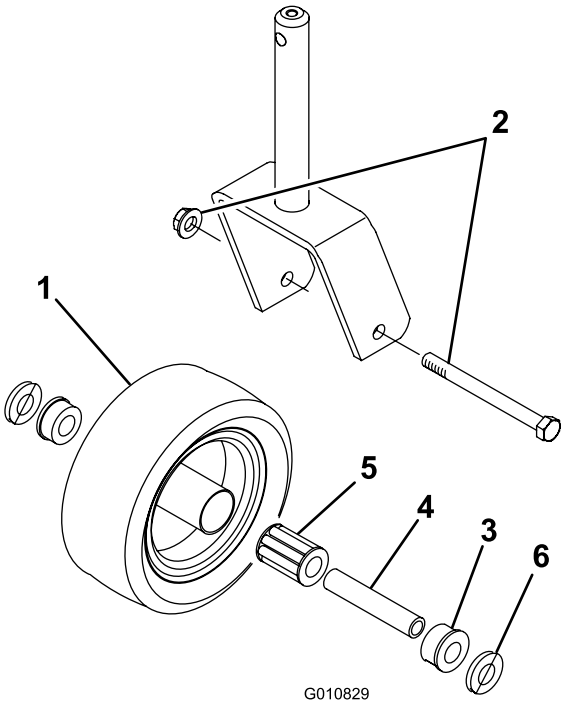

Figure 22

1. Castor wheel
2. Capscrew and locknut
3. Bushing (2)
4. Spanner bushing
5. Roller bearing
6. Washer (2)

2. Grasp the castor wheel and slide the capscrew out of the fork.
3. Pull the spanner bushing out of the wheel hub (Figure 22).
4. Remove the bushing from the wheel hub and allow the bearing to fall out.
5. Remove the bushing from the opposite side of the wheel hub.
6. Check the bearing, spanner, and inside of the wheel hub for wear, and replace any damaged parts.
7. To assemble the castor wheel, push the bushing into the wheel hub.
8. Slide the bearing into the wheel hub.
9. Push the other bushing into the open end of the wheel hub to captivate the bearing inside the wheel hub (Figure 22).
10. Carefully slide the spanner through the bushings and the wheel hub.
11. Install the castor wheel assembly between the castor fork and secure it in place with the capscrew, washers, and locknut.
12. Lubricate the castor wheel bearing through the grease fitting, using No. 2 general purpose lithium base grease.

Checking for a Bent Blade

1. Position the machine on a level surface.
2. Raise the cutting unit, engage the parking brake, put the traction pedal in neutral, the PTO lever in the Off position, shut the engine off, and remove the ignition key.
3. Block the cutting unit to prevent it from accidentally falling.
4. Rotate the blade until the ends face forward and backward. Measure from the inside of the cutting unit to the cutting edge at the front of the blade (Figure 23), and remember this dimension.



Figure 23

5. Rotate the opposite end of the blade forward.
6. Measure between the cutting unit and cutting edge of the blade at the same position as in step 4

   Note: The difference between the dimensions obtained in steps 4 and 5 must not exceed 3 mm (1/8 inch). If the dimension exceeds 3 mm (1/8 inch), replace the blade because it is bent; refer to Removing the Cutting Blade.

Removing the Cutting Blade

The blade must be replaced if a solid object is hit, the blade is out-of-balance, worn, or bent. Always use genuine Toro replacement blades to ensure safety and optimum performance. Never use blades made by other manufacturers because they could be dangerous.

⚠ DANGER

A worn or damaged blade can break, and a piece of the blade could be thrown into the operator's or bystander's area, resulting in serious personal injury or death.

- **Inspect the blade periodically for wear or damage.**
- **Do not try to straighten a blade that is bent.**
- **Never weld a broken or cracked blade.**
- **Replace a worn or damaged blade with a new Toro blade to ensure continued safety certification of the product.**

1. Position the machine on a level surface.
2. Raise the cutting unit, engage the parking brake, put the traction pedal in neutral and the PTO lever in the Off position, shut the engine off, and remove the ignition key.
3. Block the cutting unit to prevent it from accidentally falling.
4. Grasp the end of the blade using a rag or thickly padded glove. Remove the blade bolt, anti-scalp cup, and blade from the spindle shaft (Figure 24).

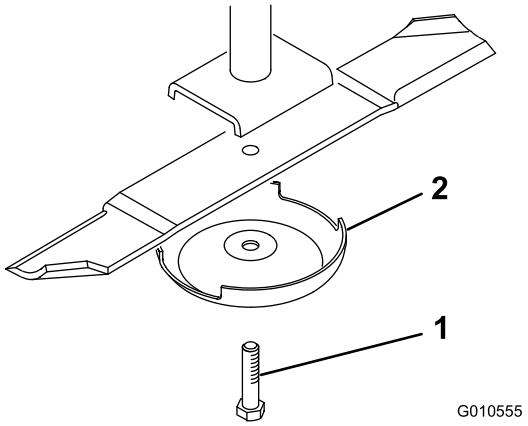

Figure 24

1. Blade bolt
2. Anti-scalp cup

5. Install the blade (with the sail facing toward the cutting unit), the anti-scalp cup, and the blade bolt.

   Note: Tighten the blade bolt to 115-149 N-m (85-110 ft-lb).

Inspecting and Sharpening the Blade

Two areas must be considered when checking and servicing the cutting blade: the sail and the cutting edge. Both cutting edges and the sail, which is the turned up portion opposite the cutting edge, contribute to a good quality-of-cut. The sail is important because it pulls grass up straight, thereby producing an even cut. However, the sail will gradually wear down during operation, and this condition is normal. As the sail wears down, the quality-of-cut will degrade somewhat, although the cutting edges are sharp. The cutting edge of the blade must be sharp so that the grass is cut rather than torn. A dull cutting edge is evident when the tips of the grass appear brown and shredded. Sharpen the cutting edges to correct this condition.

1. Position the machine on a level surface.
2. Raise the cutting unit, engage the parking brake, put the traction pedal in neutral and the PTO lever in the Off position, shut the engine off, and remove the ignition key.
3. Block the cutting unit to prevent it from accidentally falling.
4. Examine the cutting ends of the blade carefully, especially where the flat and curved parts of the blade meet (Figure 25).

   Note: Since sand and abrasive material can wear away the metal that connects the flat and curved parts of the blade, check the blade before using the machine. If you notice wear (Figure 25), replace the blade; refer to Removing the Cutting Blade.

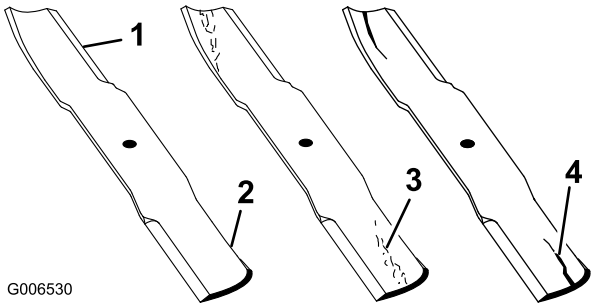

Figure 25

1. Cutting edge
2. Curved area/sail
3. Wear/slot forming
4. Crack

⚠ WARNING

If the blade is allowed to wear, a slot will form between the sail and flat part of the blade (Figure 25). Eventually, a piece of the blade may break off and be thrown from under the housing, possibly resulting in serious injury to yourself or bystanders.

- **Inspect the blade periodically for wear or damage.**
- **Replace a worn or damaged blade with a new Toro blade to ensure continued safety certification of the product.**

5. Examine the cutting edges of all blades, and sharpen the cutting edges if they are dull or nicked.

Note: Sharpen only the top side of the cutting edge and maintain the original cutting angle to ensure sharpness (Figure 26). The blade will remain balanced if the same amount of metal is removed from both cutting edges.

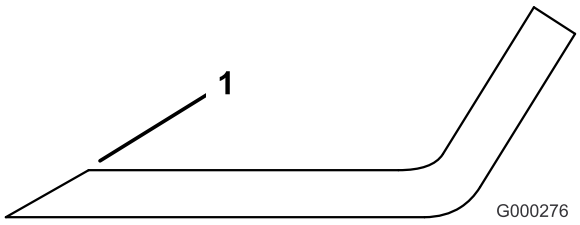

Figure 26

1. Sharpen at original angle

Note: Remove the blades and sharpen them on a grinder; refer to Removing the Cutting Blades.

6. Install the blade, the anti-scalp cup, and the blade bolt.

   Note: The blade sails must be on top of the blade.

   Note: Tighten the blade bolt to 115-149 N-m (85-110 ft-lb).

Checking and Correcting Mismatch of Blades

If one cutting blade cuts lower than the others, correct them as follows:

1. Lower the cutting unit onto a level surface, engage the parking brake, put the traction pedal in neutral and the PTO lever in the Off position, shut the engine off, and remove the ignition key.
2. Ensure that the tire pressure is equal on all tires.
3. Raise the height-of-cut to the 102 mm (4 inches) position; refer to Adjusting the Height-of-Cut.
4. Rotate the blades so that the tips line up with one another.

   Note: The tips of the adjacent blades must be within 3 mm (1/8 inch) of each other. If the tips are not within 3 mm (1/8 inch) of each other, proceed to step 10 and add shims between the spindle housing and bottom of the cutting unit.

5. Ensure that the front height-of-cut pins are resting properly on the frame cushions. If the pins are not resting properly, place a shim or shims under the cushion to raise it for proper alignment.
6. Position all 3 blades in the A position (Figure 27), and measure from the level surface to the bottom of the tip end of each blade (Figure 28), and note the measurement.

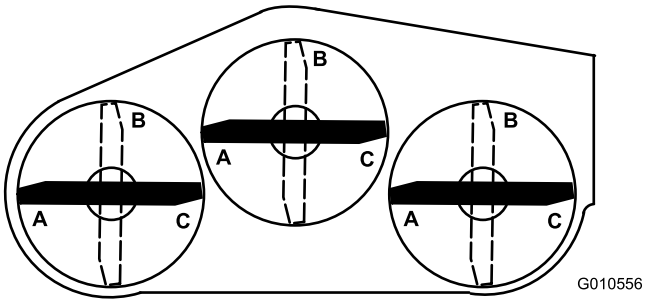

Figure 27

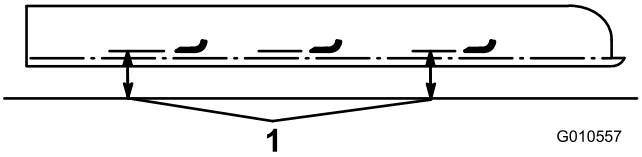

Figure 28

1. Measure from the blade tip to a level surface.

7. Rotate the blades to the B position (Figure 27), measure the distance of all of the blades to the level surface, and note the dimensions (Figure 28).
8. Rotate the blades to the C position, measure, and note the distance measured (Figure 27 and Figure 28).
9. Compare the measurements at the various positions.

   Note: All dimensions must be equal within 6 mm (1/4 inch) from any 2 adjacent blades. The difference between the dimensions of all 3 blades must not exceed 10 mm (3/8 inch). If the difference exceeds specifications, proceed to step 10.

10. Remove the capscrews, flat washers, and locknuts from the outer spindle in the area where the shims must be added.

    Note: To raise or lower the blade, add a shim, Part No. 3256-24, between the spindle housing and bottom of the cutting unit.

11. Continue checking the alignment of the blades and adding shims until the tips of the blades are within the required dimension.

Replacing the Grass Deflector

1. Position the machine on a level surface.
2. Raise the cutting unit, engage the parking brake, put the traction pedal in neutral and the PTO lever in the Off position, shut the engine off, and remove the ignition key.
3. Block the cutting unit to prevent it from accidentally falling.
4. Remove the 2 capscrews, locknuts, and springs that secure the deflector mounts to the pivot brackets (Figure 29).

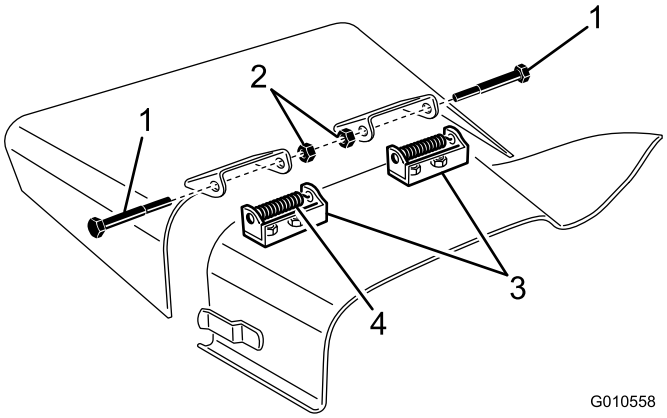

Figure 29

1. Bolt
2. Locknuts
3. Pivot brackets
4. Spring

5. To remove the pivot brackets, remove the carriage bolts and nuts (Figure 29).
6. Install the pivot brackets on top of the discharge opening with the carriage bolts and nuts.

   Note: The head of the carriage bolts must be on the inside of the cutting unit.
7. Position the deflector mounts on the pivot brackets and secure the parts together with the capscrews, locknuts, and springs.

   Note: Both locknuts must face each other. Tighten the locknuts until they are flush against the deflector pivots.
8. Lift the deflector and allow it to drop to check the spring tension.

   Note: The deflector must be held firmly in the full downward position by the spring tension. Correct it if necessary.

Adjusting the Idler Pulley

The idler pulley applies force against the belt so that power can be transmitted to the blade pulleys. If the idler is not tensioned against the belt with sufficient force, maximum power will not be transmitted to the pulleys. Tension on the belt requires 47 to 54 N-m (35 to 40 ft-lb) of torque on the large nut, which applies force against the belt. If the idler is not adjusted to these specifications, adjust it.

Important: The fasteners on the covers of this machine are designed to remain on the cover after removal. Loosen all of the fasteners on each cover a few turns so that the cover is loose but still attached, then go back and loosen them until the cover comes free. This will prevent you from accidentally stripping the bolts free of the retainers.

1. Position the machine on a level surface.
2. Lower the cutting unit, engage the parking brake, put the traction pedal in neutral, the PTO lever in the Off position, shut the engine off, and remove the ignition key.
3. Remove the cover from the center cutting unit.
4. Loosen the 2 nuts that secure the idler plate in place.
5. Use a socket and torque wrench to tighten the idler adjusting nut to 47 to 54 N-m (35 to 40 ft-lb) (Figure 30).

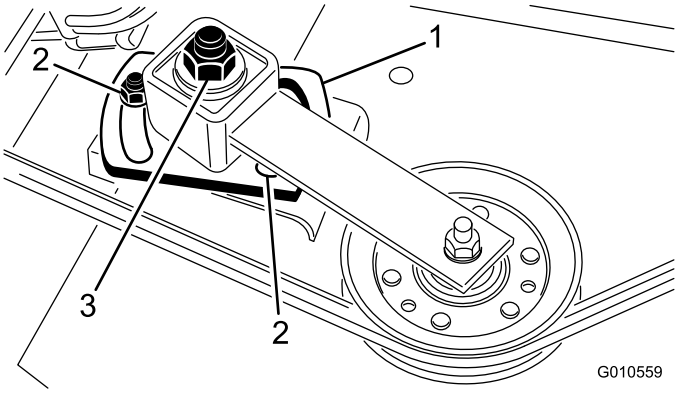

Figure 30

1. Idler plate
2. Nuts (2)
3. Idler adjusting nut

6. Hold the torque against the belt and tighten the 2 nuts so that the idler plate is held securely in place.
7. Release the idler adjusting nut.
8. Install the cover.

Replacing the Drive Belt

The blade drive belt, tensioned by the adjustable idler, is very durable. However, after many hours of use, the belt will show signs of wear. Signs of a worn belt are: squealing when belt is rotating, blades slipping when cutting grass, frayed edges, burn marks, and cracks. Replace the belt if any of these conditions are evident.

Important: The fasteners on the covers of this machine are designed to remain on the cover after removal. Loosen all of the fasteners on each cover a few turns so that the cover is loose but still attached, then go back and loosen them until the cover comes free. This will prevent you from accidentally stripping the bolts free of the retainers.

1. Position the machine on a level surface.
2. Lower the cutting unit, engage the parking brake, put the traction pedal in neutral and the PTO lever in the Off position, shut the engine off, and remove the ignition key.
3. Remove the covers from the top of the cutting unit.
4. Loosen the 2 nuts that secure the idler plate in place, and remove the old belt from the pulleys.

5. To install a new belt, you must remove the gear box by removing the 4 carriage bolts and locknuts holding the gear box base.
6. Install the new belt around the gear box pulley, spindle pulleys, stationary idler pulley, and adjustable idler pulley (Figure 31).

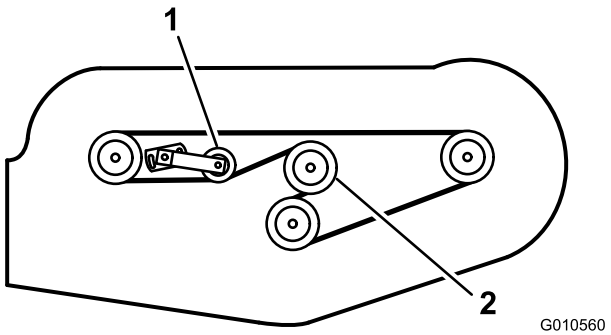

Figure 31

1. Adjustable idler pulley 2. Gear box pulley

7. Install the gear box base with the carriage bolts and locknuts.
8. Use a torque wrench to adjust the tension of the idler pulley against the belt; refer to Adjusting the Idler Pulley.
9. Install the covers.

Troubleshooting

Problem	Possible Cause	Corrective Action
The cutting unit will not cut or cuts poorly.	1. The blades are dull.	1. Sharpen the blades.
	2. One or more blades are bent or damaged.	2. Replace the blades.
	3. The spindle bolts are loose.	3. Torque the spindle bolts to 115 to 149 N-m (85 to 110 ft-lb).
	4. The cutting unit belts are loose or broken.	4. Tighten or replace the belts as necessary.
	5. The gear box pulley is loose.	5. Tighten or replace the pulley.
	6. A gear box shaft is broken.	6. Replace any broken shafts.
	7. The PTO belt is broken.	7. Replace the PTO belt.
	8. The PTO pulley is loose or broken.	8. Tighten or replace the pulley.
	9. The PTO shaft is broken.	9. Replace the PTO shaft.
	10. The pulley on the engine output shaft is loose or broken.	10. Tighten or replace the pulley.

Notes:

Notes:

Declaration of Incorporation

The Toro Company, 8111 Lyndale Ave. South, Bloomington, MN, USA declares that the following unit(s) conform(s) to the directives listed, when installed in accordance with the accompanying instructions onto certain Toro models as indicated on the relevant Declarations of Conformity.

Model No.	Serial No.	Product Description	Invoice Description	General Description	Directive
30551	314000001 and Up	62in Side Discharge Mower	62" SIDE DISCHARGE MOWER	62in Side Discharge Mower	2006/42/EC, 2000/14/EC

Relevant technical documentation has been compiled as required per Part B of Annex VII of 2006/42/EC.

We will undertake to transmit, in response to requests by national authorities, relevant information on this partly completed machinery. The method of transmission shall be electronic transmittal.

This machinery shall not be put into service until incorporated into approved Toro models as indicated on the associated Declaration of Conformity and in accordance with all instructions, whereby it can be declared in conformity with all relevant Directives.

Certified:



David Klis
Sr. Engineering Manager
8111 Lyndale Ave. South
Bloomington, MN 55420, USA
September 26, 2013

EU Technical Contact:

Peter Tetteroo
Toro Europe NV
B-2260 Oevel-Westerloo
Belgium

Tel. 0032 14 562960
Fax 0032 14 581911

International Distributor List

Distributor:	Country:	Phone Number:	Distributor:	Country:	Phone Number:
Agrolanc Kft	Hungary	36 27 539 640	Maquiver S.A.	Colombia	57 1 236 4079
Balama Prima Engineering Equip.	Hong Kong	852 2155 2163	Maruyama Mfg. Co. Inc.	Japan	81 3 3252 2285
B-Ray Corporation	Korea	82 32 551 2076	Mountfield a.s.	Czech Republic	420 255 704 220
Casco Sales Company	Puerto Rico	787 788 8383	Mountfield a.s.	Slovakia	420 255 704 220
Ceres S.A.	Costa Rica	506 239 1138	Munditol S.A.	Argentina	54 11 4 821 9999
CSSC Turf Equipment (pvt) Ltd.	Sri Lanka	94 11 2746100	Norma Garden	Russia	7 495 411 61 20
Cyril Johnston & Co.	Northern Ireland	44 2890 813 121	Oslinger Turf Equipment SA	Ecuador	593 4 239 6970
Cyril Johnston & Co.	Republic of Ireland	44 2890 813 121	Oy Hako Ground and Garden Ab	Finland	358 987 00733
Equiver	Mexico	52 55 539 95444	Parkland Products Ltd.	New Zealand	64 3 34 93760
Femco S.A.	Guatemala	502 442 3277	Perfetto	Poland	48 61 8 208 416
ForGarder OU	Estonia	372 384 6060	Pratoverde SRL.	Italy	39 049 9128 128
G.Y.K. Company Ltd.	Japan	81 726 325 861	Prochaska & Cie	Austria	43 1 278 5100
Geomechaniki of Athens	Greece	30 10 935 0054	RT Cohen 2004 Ltd.	Israel	972 986 17979
Golf international Turizm	Turkey	90 216 336 5993	Riversa	Spain	34 9 52 83 7500
Guandong Golden Star	China	86 20 876 51338	Lely Turfcare	Denmark	45 66 109 200
Hako Ground and Garden	Sweden	46 35 10 0000	Solvert S.A.S.	France	33 1 30 81 77 00
Hako Ground and Garden	Norway	47 22 90 7760	Spypros Stavrinides Limited	Cyprus	357 22 434131
Hayter Limited (U.K.)	United Kingdom	44 1279 723 444	Surge Systems India Limited	India	91 1 292299901
Hydroturf Int. Co Dubai	United Arab Emirates	97 14 347 9479	T-Markt Logistics Ltd.	Hungary	36 26 525 500
Hydroturf Egypt LLC	Egypt	202 519 4308	Toro Australia	Australia	61 3 9580 7355
Irrimac	Portugal	351 21 238 8260	Toro Europe NV	Belgium	32 14 562 960
Irrigation Products Int'l Pvt Ltd.	India	0091 44 2449 4387	Valtech	Morocco	212 5 3766 3636
Jean Heybroek b.v.	Netherlands	31 30 639 4611	Victus Emak	Poland	48 61 823 8369

European Privacy Notice

The Information Toro Collects
Toro Warranty Company (Toro) respects your privacy. In order to process your warranty claim and contact you in the event of a product recall, we ask you to share certain personal information with us, either directly or through your local Toro company or dealer.

The Toro warranty system is hosted on servers located within the United States where privacy law may not provide the same protection as applies in your country.

BY SHARING YOUR PERSONAL INFORMATION WITH US, YOU ARE CONSENTING TO THE PROCESSING OF YOUR PERSONAL INFORMATION AS DESCRIBED IN THIS PRIVACY NOTICE.

The Way Toro Uses Information
Toro may use your personal information to process warranty claims, to contact you in the event of a product recall and for any other purpose which we tell you about. Toro may share your information with Toro's affiliates, dealers or other business partners in connection with any of these activities. We will not sell your personal information to any other company. We reserve the right to disclose personal information in order to comply with applicable laws and with requests by the appropriate authorities, to operate our systems properly or for our own protection or that of other users.

Retention of your Personal Information
We will keep your personal information as long as we need it for the purposes for which it was originally collected or for other legitimate purposes (such as regulatory compliance), or as required by applicable law.

Toro's Commitment to Security of Your Personal Information
We take reasonable precautions in order to protect the security of your personal information. We also take steps to maintain the accuracy and current status of personal information.

Access and Correction of your Personal Information
If you would like to review or correct your personal information, please contact us by email at legal@toro.com.

Australian Consumer Law

Australian customers will find details relating to the Australian Consumer Law either inside the box or at your local Toro Dealer.

Toro General Commercial Product Warranty

A Two-Year Limited Warranty

Conditions and Products Covered

The Toro Company and its affiliate, Toro Warranty Company, pursuant to an agreement between them, jointly warrant your Toro Commercial product ("Product") to be free from defects in materials or workmanship for two years or 1500 operational hours*, whichever occurs first. This warranty is applicable to all products with the exception of Aerators (refer to separate warranty statements for these products). Where a warrantable condition exists, we will repair the Product at no cost to you including diagnostics, labor, parts, and transportation. This warranty begins on the date the Product is delivered to the original retail purchaser.
* Product equipped with an hour meter.

Instructions for Obtaining Warranty Service

You are responsible for notifying the Commercial Products Distributor or Authorized Commercial Products Dealer from whom you purchased the Product as soon as you believe a warrantable condition exists. If you need help locating a Commercial Products Distributor or Authorized Dealer, or if you have questions regarding your warranty rights or responsibilities, you may contact us at:

Toro Commercial Products Service Department
Toro Warranty Company
8111 Lyndale Avenue South
Bloomington, MN 55420-1196

952–888–8801 or 800–952–2740
E-mail: commercial.warranty@toro.com

Owner Responsibilities

As the Product owner, you are responsible for required maintenance and adjustments stated in your *Operator's Manual*. Failure to perform required maintenance and adjustments can be grounds for disallowing a warranty claim.

Items and Conditions Not Covered

Not all product failures or malfunctions that occur during the warranty period are defects in materials or workmanship. This warranty does not cover the following:

- Product failures which result from the use of non-Toro replacement parts, or from installation and use of add-on, or modified non-Toro branded accessories and products. A separate warranty may be provided by the manufacturer of these items.
- Product failures which result from failure to perform recommended maintenance and/or adjustments. Failure to properly maintain your Toro product per the Recommended Maintenance listed in the *Operator's Manual* can result in claims for warranty being denied.
- Product failures which result from operating the Product in an abusive, negligent, or reckless manner.
- Parts subject to consumption through use unless found to be defective. Examples of parts which are consumed, or used up, during normal Product operation include, but are not limited to, brake pads and linings, clutch linings, blades, reels, rollers and bearings (sealed or greasable), bed knives, spark plugs, castor wheels and bearings, tires, filters, belts, and certain sprayer components such as diaphragms, nozzles, and check valves, etc.
- Failures caused by outside influence. Conditions considered to be outside influence include, but are not limited to, weather, storage practices, contamination, use of unapproved fuels, coolants, lubricants, additives, fertilizers, water, or chemicals, etc.
- Failure or performance issues due to the use of fuels (e.g. gasoline, diesel, or biodiesel) that do not conform to their respective industry standards.
- Normal noise, vibration, wear and tear, and deterioration.
- Normal "wear and tear" includes, but is not limited to, damage to seats due to wear or abrasion, worn painted surfaces, scratched decals or windows, etc.

Parts

Parts scheduled for replacement as required maintenance are warranted for the period of time up to the scheduled replacement time for that part. Parts replaced under this warranty are covered for the duration of the original product warranty and become the property of Toro. Toro will make the final decision whether to repair any existing part or assembly or replace it. Toro may use remanufactured parts for warranty repairs.

Deep Cycle and Lithium-Ion Battery Warranty:

Deep cycle and Lithium-Ion batteries have a specified total number of kilowatt-hours they can deliver during their lifetime. Operating, recharging, and maintenance techniques can extend or reduce total battery life. As the batteries in this product are consumed, the amount of useful work between charging intervals will slowly decrease until the battery is completely worn out. Replacement of worn out batteries, due to normal consumption, is the responsibility of the product owner. Battery replacement may be required during the normal product warranty period at owner's expense. Note: (Lithium-Ion battery only): A Lithium-Ion battery has a part only prorated warranty beginning year 3 through year 5 based on the time in service and kilowatt hours used. Refer to the *Operator's Manual* for additional information.

Maintenance is at Owner's Expense

Engine tune-up, lubrication, cleaning and polishing, replacement of filters, coolant, and completing recommended maintenance are some of the normal services Toro products require that are at the owner's expense.

General Conditions

Repair by an Authorized Toro Distributor or Dealer is your sole remedy under this warranty.

Neither The Toro Company nor Toro Warranty Company is liable for indirect, incidental or consequential damages in connection with the use of the Toro Products covered by this warranty, including any cost or expense of providing substitute equipment or service during reasonable periods of malfunction or non-use pending completion of repairs under this warranty. Except for the Emissions warranty referenced below, if applicable, there is no other express warranty. All implied warranties of merchantability and fitness for use are limited to the duration of this express warranty.

Some states do not allow exclusions of incidental or consequential damages, or limitations on how long an implied warranty lasts, so the above exclusions and limitations may not apply to you. This warranty gives you specific legal rights, and you may also have other rights which vary from state to state.

Note regarding engine warranty:

The Emissions Control System on your Product may be covered by a separate warranty meeting requirements established by the U.S. Environmental Protection Agency (EPA) and/or the California Air Resources Board (CARB). The hour limitations set forth above do not apply to the Emissions Control System Warranty. Refer to the Engine Emission Control Warranty Statement supplied with your product or contained in the engine manufacturer's documentation for details

Countries Other than the United States or Canada

Customers who have purchased Toro products exported from the United States or Canada should contact their Toro Distributor (Dealer) to obtain guarantee policies for your country, province, or state. If for any reason you are dissatisfied with your Distributor's service or have difficulty obtaining guarantee information, contact the Toro importer.

374-0253 Rev C