Form No. 3318–282

Counterbalance Kit
For Groundsmaster® 200 Series Decks

Part No. 70–7010
Part No. 70–8090
Part No. 70–8100

Installation Instructions

Safety and Instruction Decals

The following decal is installed on the spring cover in two locations. If they become damaged or illegible, replace them. The decal part number is listed below and in your parts catalog. Replacements can be ordered from your Authorized Toro Distributor.

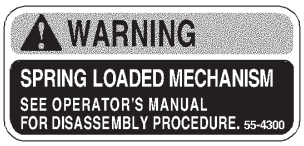

55-4300

Loose Part Chart

Description	Qty. 52”	Qty. 62”, 72”	Use
Adapter bar*	0	1*	Adapts bracket to 217–D and 220 models.
Mounting bracket	1	2	Spring cover mount.
Lock pin assembly	2	4	Install on bracket.
Self-tapping screw	2	4	To secure lock pins to bracket.
Spring cover assembly	1	2	Install in bracket.
Clevis pin	1	2	Insert in spring cover & top of spring.
Hairpin cotter	1	2	Use to secure clevis pin.
Spring end—top	1	2	Install on clevis pin & top of extension spring.
Heavy extension spring	1	2	Install between top & bottom of spring ends (Use one only on 62”, L.H. side).
Light extension spring	0	1	62” only. Mount between top & bottom spring ends; R.H. side.
Lower spring end	1	2	Install on bottom of extension spring. Assemble knee link to lower hole.
Knee link	1	2	Attach top hole to lower spring end, bottom hole to deck bracket.
Capscrew, 3/8 x 2-1/4 in.	2	4	To mount adapter bar (62”, 72”) and mounting bracket to 217–D & 220 traction unit frames (52”).
Capscrew, 3/8 x 1 in.	2	4	Secures mounting brackets to adapter bar (62”, 72”) and mounting bracket to 224 & 220–D traction unit frames.
Shoulder bolt	2	4	Attaches knee link to deck bracket and lower spring end.
Flat washer	2	4	Use with shoulder bolt and locknut.
Locknut, 3/8 in.	4	12	Use with all fasteners, where necessary.
Decal–caution	2	4	Apply over decals for CE compliance

PROTOTYPE

* Not included with kit; Order Part No. 66–8210 from your Authorized Toro Distributor.

© 2002 by The Toro Company
All Rights Reserved
8111 Lyndale Avenue South
Bloomington, MN 55420-1196
Printed in the USA

Installation

Note: The cutting deck and carrier frame must be installed on traction unit before installing the counterbalance kit. Fully raise the cutting deck, set the parking brake, stop the engine, and remove the ignition key. Place blocks under the cutting deck to prevent it from falling during assembly.

Note: Mounting brackets must be installed in different configurations (Fig. 1) and, depending on the cutter deck, in different locations on 220–D and 223–D, 228–D, 225, 224 and 1000L models than on the 217–D and 220 model machines (Fig. 2, 3).

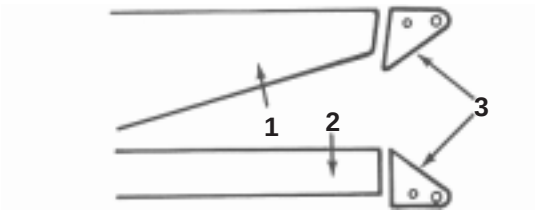

Figure 1

1. 220–D, 223–D, 228–D, 225, 224 & 1000L traction unit frame
2. 217–D, 220 traction unit frame

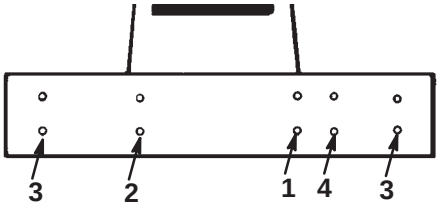

GM 220–D, 223–D, 228–D, 225, 224 & 1000L
Figure 2

1. 52″ side discharge deck
2. 52″ deck w/bagger
3. 62″ and 72″ decks
4. 52″ rear discharge deck

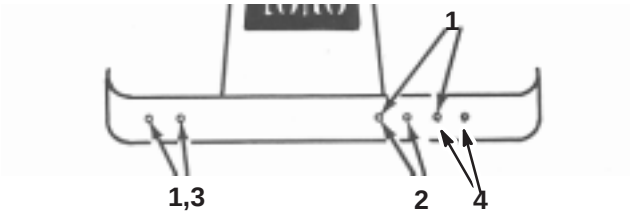

GM 217–D & 220
Figure 3

1. Adapter bar mount holes (62” & 72” C.U.)
2. 52” Side discharge deck
3. 52” Side discharge w/bagger
4. 52” Rear discharge deck

52” Cutting Decks

1. To install the mounting brackets,

- Groundsmaster 220–D, 223–D, 228–D, 225, 224 and 1000L – Insert 2 flange head capscrews (3/8 x 1 in.) through the slotted bracket holes. Thread the screws into the captivated frame nuts and torque them to 45–50 ft.-lb. (61–68 N·m) (Fig. 4).

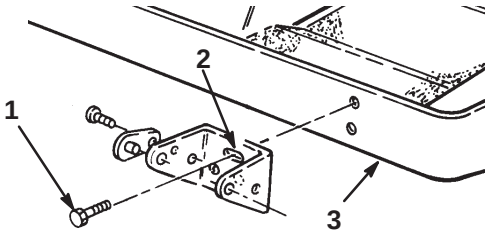

Figure 4

1. Flange head capscrew
2. Slotted hole
3. Frame

- Groundsmaster 217–D and 220 – Align the bracket with the frame mounting holes. Insert 2 flange head capscrews (3/8 x 2–1/4 in.) through the non–slotted bracket holes and frame mounting holes. Install lock nuts and torque them to 45–50 ft.-lb. (61–68 N·m) (Fig. 5)

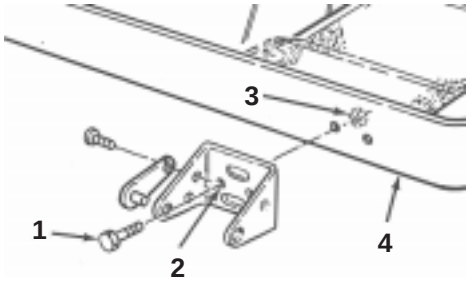

Figure 5

1. Flange head capscrew
2. Non–slotted hole
3. Locknut
4. Frame

2. Thread the top extension spring coil into the top spring end holes and the bottom extension spring coil into the bottom spring end holes (Fig. 6).

PROTOTYPE

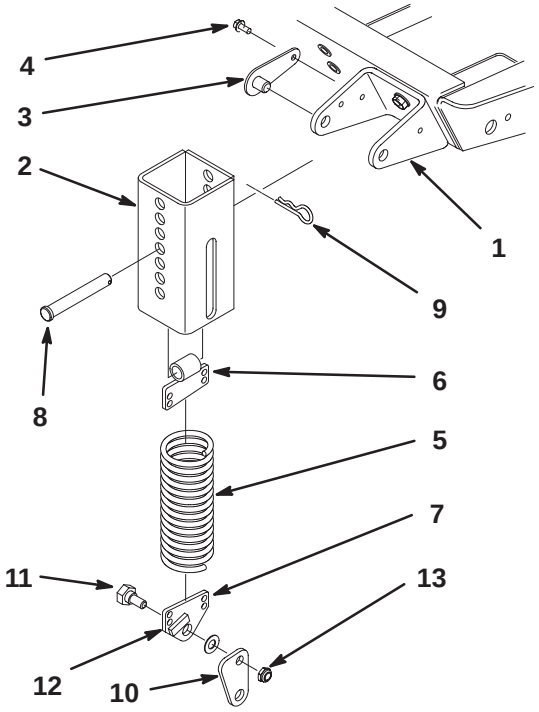

Figure 6

1. Mounting bracket
2. Spring cover
3. Lock pin assembly
4. Self-tapping screw
5. Extension spring
6. Top spring end
7. Bottom spring end
8. Clevis pin
9. Hairpin cotter
10. Knee link
11. Shoulder bolt
12. Spring end stop
13. Locknut (2)

3. Mount each knee link to the lower spring end with the wide part of the knee link pointing forward and the spring end stop pointing forward. Secure the knee link to the outer side of the spring end (Fig. 8) with a shoulder bolt, washer, and locknut (Fig. 6 and 7).

Important The knee link must be assembled pointing in the proper direction or the spring will not pivot correctly when the deck is raised.

4. Mount the bottom of the knee link to the deck bracket with a shoulder bolt, flatwasher and locknut.

5. Align the slotted holes in the spring cover (slot toward the bottom) with the mounting bracket holes. Insert the lock pin assemblies into the bracket holes and secure each to the bracket with the self-tapping screws (Fig. 6). Torque the screws to 20 ft.-lb. (27 N·m).

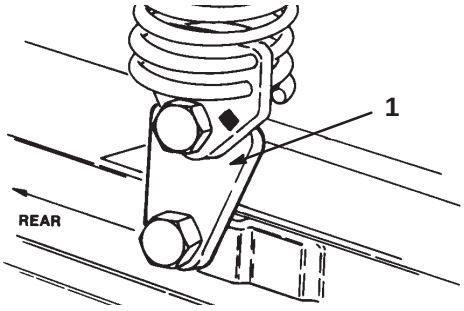

Figure 7

1. Wide part of knee link

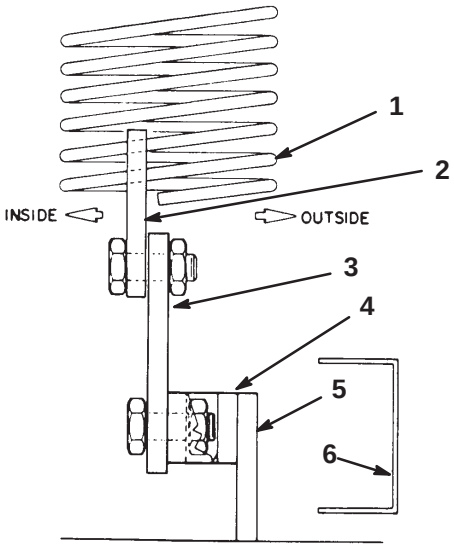

Figure 8

1. Weight transfer spring
2. Spring end plate
3. Knee link bracket
4. Deck bracket
5. Deck frame
6. Flotation frame

6. From the bottom, insert the spring and top spring end into the spring cover. Select a hole that matches the cutter deck height-of-cut setting; i.e., the top cover hole matches the highest height setting, the bottom cover hole the lowest, etc. Align the top spring end hole with the selected spring cover holes and insert the clevis pin to secure the spring inside the cover (Fig. 6). Secure the clevis pin with a hairpin cotter.

7. Remove the blocks from under the cutting unit. Make the final counterbalance adjustments under actual cutting conditions; refer to Final Adjustments.

62” and 72” Cutting Decks

1. On 217–D and 220 models, install the adapter bar to the front of the front of the traction unit frame (optional–not included with frame with 4 flange head capscrews (3/8 x 2–1/4 in.) and locknuts (Fig. 9).

PROTOTYPE

2. At each bracket, align the slotted holes in the spring cover (slot toward the bottom) with the mounting bracket holes. Insert lock pin assemblies into the bracket holes and secure to the bracket with self–tapping screws (Fig. 9). Torque the screws to 20 ft.-lb. (27 N·m)

3. Thread the top extension spring coils into the top spring end holes and the bottom extension spring coils into the bottom spring end holes (Fig. 9).

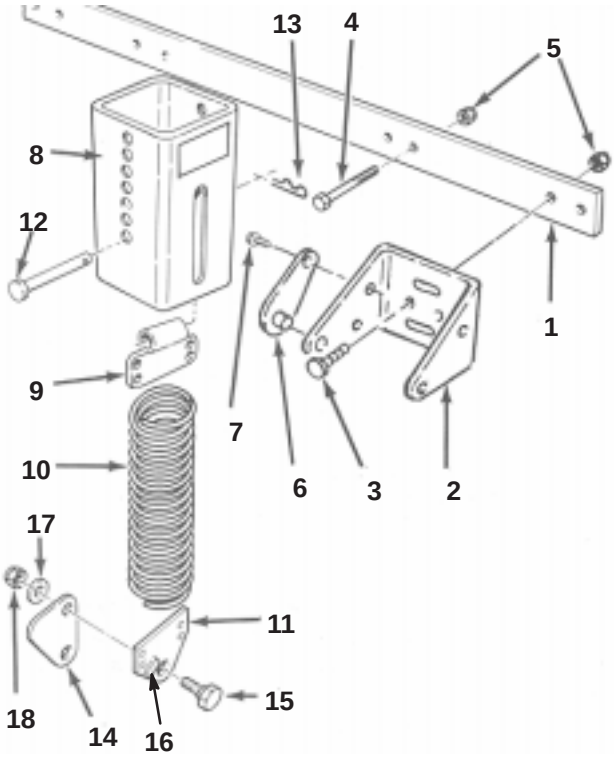

Figure 9

1. Adapter (217–D & 220 models)
2. Mounting bracket
3. 3/8 x 1” capscrew
4. 3/8 x 2–1/4” capscrew
5. Locknut
6. Lock pin assembly
7. Self-tapping screw
8. Spring cover
9. Top spring end
10. Extension spring
11. Bottom spring end
12. Clevis pin
13. Hairpin cotter
14. Knee link
15. Shoulder bolt
16. Spring end stop
17. Flatwasher
18. Locknut

4. Mount each knee link to the lower spring end with the wide part of the knee link pointing forward and the spring end stop pointing forward. Secure the knee link to the outer side of the spring end (Fig. 8) with a shoulder bolt, washer, and locknut (Fig. 6 and 7).

5. Mount the bottom of the knee link to the deck bracket with a shoulder bolt, flatwasher and locknut.

6. Position mounting brackets in the proper configuration (Figure 1). Secure brackets to 217–D and 220 models with (4) flange head capscrews (3/8 x 1 in.). Torque the fasteners to 45–50 ft.-lb. (61–68 N·m).

Note: 62” cutting decks use a heavy rate extension spring on the left hand side (large diameter spring wire) and light rate extension spring on the right hand side (small diameter spring wire)

7. From the bottom, insert the spring and top spring end into the spring cover. Select a hole that matches the cutter deck height-of-cut setting; i.e., the top cover hole matches the highest height setting, the bottom cover hole the lowest, etc. Align the top spring end hole with the selected spring cover holes and insert the clevis pin to secure the spring inside the cover (Fig. 6). Secure the clevis pin with a hairpin cotter.

8. Remove the blocks from under the cutting unit. Make the final counterbalance adjustments under actual cutting conditions; refer to Final Adjustments.

Final Adjustments

For best performance, adjust spring tension so cutting unit bounce on uneven turf is minimal and it does not ride heavily over flat terrain. If scalping occurs or the cut is uneven from side to side, there may too much weight on the deck and weight may have to be transferred to the traction unit: i.e. increased spring tension.

By contrast, if too much weight is transferred to the traction unit, the deck will bounce excessively and the cut will be uneven. If the cutting unit does not perform properly, adjust the tension spring as follows:

1. Stop the machine on a level surface, set the parking brake, fully raise the cutting unit, turn the ignition key to Off, and remove the key.

2. Remove the hairpin cotter from the clevis pin securing the spring end to the spring cover and remove the clevis pin. Align the top spring end hole with the new hole selected in the spring cover, insert the clevis pin, and secure it with the hairpin cotter. On 62” and 72” units, ensure the same holes are selected in each spring cover

PROTOTYPE

Caution

The counterbalance spring is in tension when the deck is in the lowered position.

Always raise the deck before adjusting or removing the spring.

3. Resume operations. If further adjustments are required, repeat the procedure.