Form No. 3393-286 Rev A

TORO®

Count on it.

Parts Catalog

EU Compliance Kit

2015 and After Multi Pro® 1750 Turf Sprayer

Model No. 41155—Serial No. 315000001 and Up

Register at www.Toro.com.
Original Instructions (EN)

CE

3393-286 A

Ordering Replacement Parts

To order replacement parts, please supply the part number, the quantity, and the description of each part desired.

Understanding Reference Numbers

Each identified part in an illustration has a reference number. The reference number for a part also appears in the parts list, along with other information about the part.

This catalog uses two special reference number formats, one to indicate parts in a service assembly and another to indicate the quantity of a given part in an illustration.

Service Assembly Reference Numbers

Parts in service assemblies have reference numbers in the form a:b. The a represents the reference number of the entire service assembly and the b represents a sequential number unique to each part within the service assembly.

For example, a wheel assembly might be identified by reference number 6, the tire by 6:1, the valve by 6:2, and the wheel by 6:3. When you order the assembly identified by reference number 6, you receive all parts identified by reference numbers 6:1,6:2, and 6:3. However, you may also order any part individually. Reference numbers of this type appear in illustration and in parts lists.

Reference Numbers Indicating Quantity

In an illustration, if a reference number indicates more than one part, the reference number has the form nX y. The n represents the quantity of the part, the X is the multiplication symbol, and the y represents the reference number.

For example, in an illustration, the reference number 2X 37 means that two of the parts identified by reference number 37 are indicated.

List of Abbreviations

AR: as required

ASM: assembly

BBC: blade brake control

BHTF: button head thread forming

CARR: carriage

CCW: counter clockwise

CW: clockwise

DEG: degrees

DPA: Dual Point Adjustment

ECM: electronic control module

EXT: external

FH: flat head

GA: gauge

HD: heavy-duty

HF: hex flange

HH: hex head

HHF: hex head flange

HHFTF: hex head flange thread forming

HJ: hex jam

HLH: hex lag head

HOC: height-of-cut

HP: high pressure

HSBH: hex socket button head

HSFH: hex socket flat head

HSH: hex socket head

HWH: hex washer head

HWHTF: hex washer head thread forming

HYD: hydraulic

LH: left hand

LP: low pressure

LPG: Liquefied Petroleum Gas

NI: nylon insert

NPTF: national pipe thread fine

PFH: phillips flat head

PPH: phillips pan head

PPHTF: phillips pan head thread forming

PRH: phillips round head

PTH: phillips truss head

PTO: power-take-off

RH: right hand

ROPS: roll-over protection system

RRB: rear roller brush

SFH: slotted fillister head

SHH: slotted hex head

SHWH: slotted hex washer head

SPH: slotted pan head

SQH: square head

SRH: slotted round head

STD: standard

TAP: self tapping

TTH: torx truss head

Contents

EU Compliance Kit 4
Spray Gun and Pressure Filter Assembly 6
Spray Gun Assembly No. 120-8610 8
Pressure Filter Assembly No. 127-9726 10

© 2015—The Toro® Company
8111 Lyndale Avenue South
Bloomington, MN 55420

Contact us at www.Toro.com.
Printed in the USA.
All Rights Reserved

EU Compliance Kit

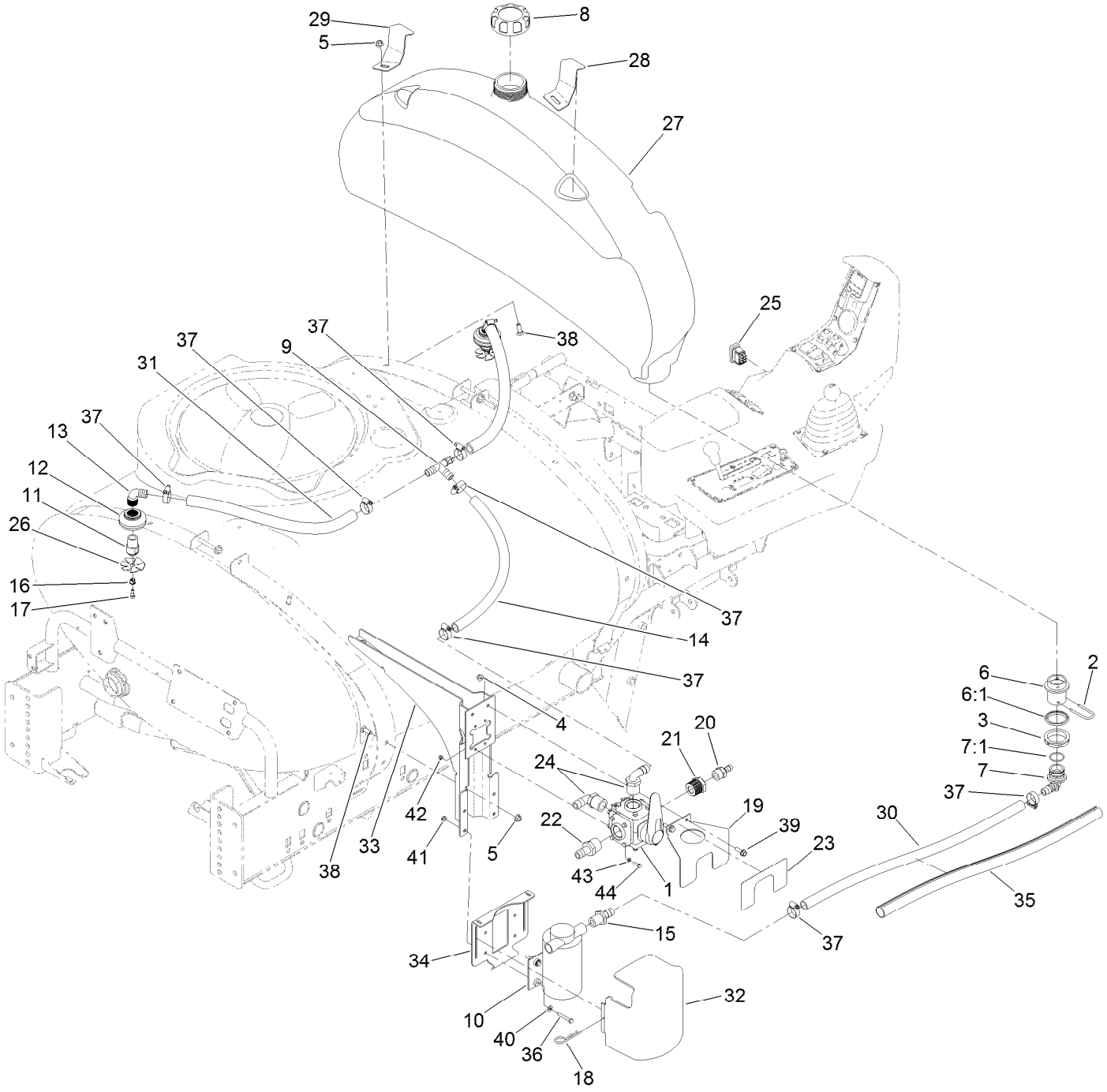

EU Compliance Kit (continued)

Ref.	Part Number	Qty.	Description
1	119-4980	1	Valve, 4-Way
2	100-6708	1	Fork
3	100-6713	1	Nut-Bulkhead
4	104-8300	2	Nut-Flange, NI
5	104-8301	3	Nut-Flange, NI
6	106-4896	1	Fitting-Bulkhead
6:1	100-6710	1	Gasket-Bulkhead
7	106-4940	1	Hosebarb-90 DEG
7:1	100-6712	1	O-Ring
8	107-8641	1	Cap-Water, Fresh
9	108-3439	1	Tee
10	117-7872	1	Pump-Rinse
11	119-0479	2	Nozzle-Rinse
12	119-0489	2	Bulkhead
13	119-0490	2	Elbow-Hosebarb
14	119-0493	1	Hose-Supply, Rinse
15	119-0496	1	Hosebarb
16	119-0528	2	Bushing
17	119-4881	2	Bolt-Shoulder
18	9335044	2	Pin-Hair
19	120-0657-03	1	Bracket
20	120-0668	1	Hosebarb
21	120-0669	1	Reducer
22	120-0670	1	Hosebarb
23	120-0673	1	Decal-Selection
24	120-0688	2	Hosebarb-90 DEG
25	120-0695	1	Switch-Rocker, On-Off-(On)
26	120-8635	2	Vain-Rinse
27	125-4072	1	Tank-Rinse, 17 Gallon
28	125-4074-03	1	Bracket-Hold, Rinse Tank, RH
29	125-4075-03	1	Bracket-Hold, Rinse Tank, LH
30	125-4148	1	Hose-Supply, Rinse
31	125-4149	2	Hose-Supply, Rinse
32	125-8085	1	Cover-Pump, Rinse
33	127-3900-03	1	Valve-Mount, Welded
34	127-9762-03	1	Bracket-Mount, Rinse Pump
35	107-8650	1	Conduit-Convoluted
36	321-10	4	Screw-HH
37	2412-129	8	Clamp-Hose
38	3231-22	3	Screw-CARR
39	3234-17	2	Screw-HHF
40	3256-22	4	Washer-Flat
41	32128-33	4	Nut-HF
42	33023-00	4	Nut-Lock
43	33093-00	4	Washer-Flat
44	33113-016	4	Screw-HH

Spray Gun and Pressure Filter Assembly

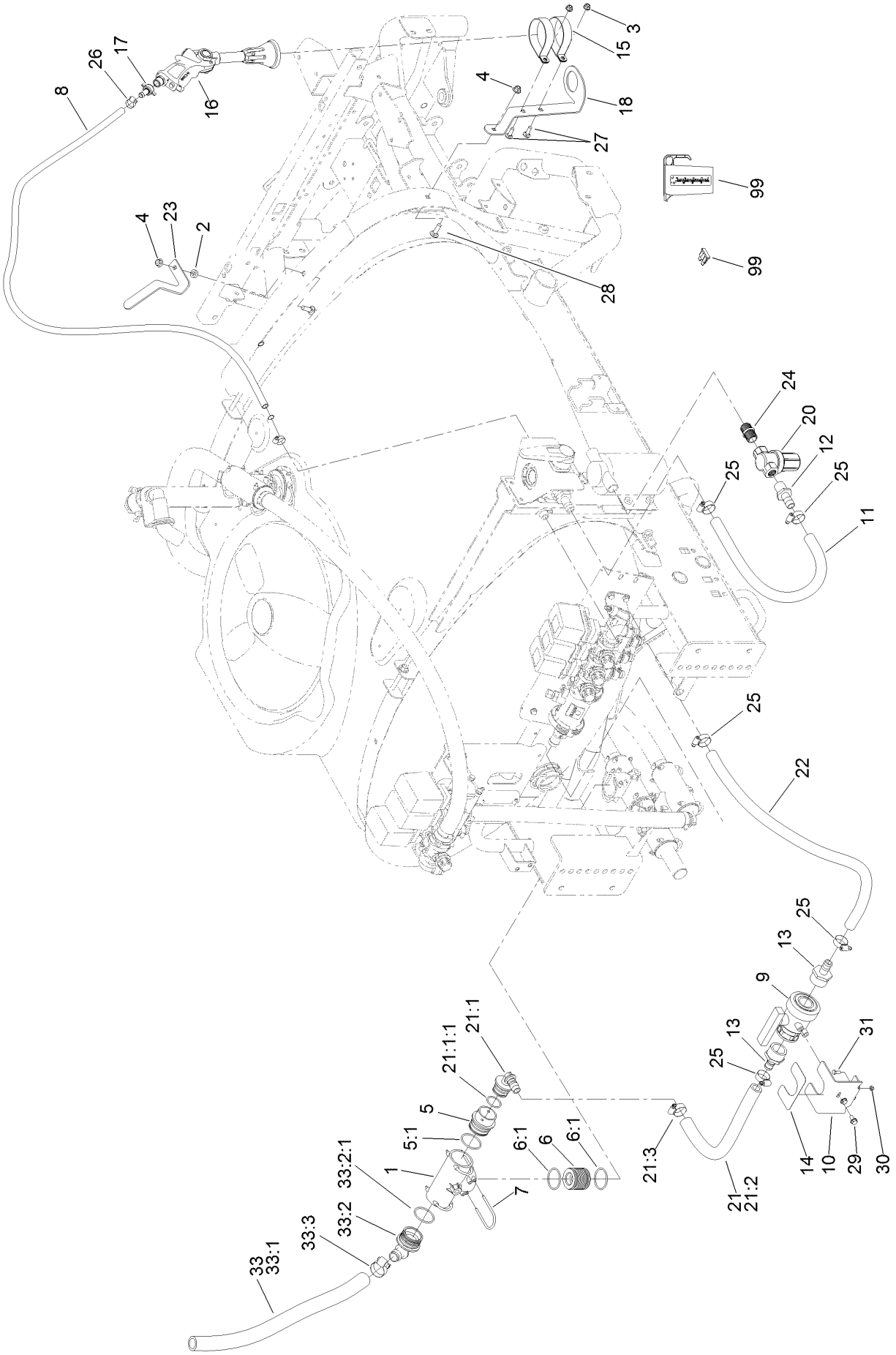

Spray Gun and Pressure Filter Assembly (continued)

Ref.	Part Number	Qty.	Description
1	100-6704	1	Tee
2	104-1156	1	Spacer
3	104-8300	2	Nut-Flange, NI
4	104-8301	2	Nut-Flange, NI
5	106-4938	1	Reducer ASM
5:1	100-8637	1	O-Ring
6	106-4947	1	Connector
6:1	100-8637	2	O-Ring
7	100-8635	3	Fork
8	107-8751	1	Hose-Spray Gun
9	108-0069	1	Valve-Ball
10	119-0442-03	1	Bracket-Ball Valve
11	119-0493	1	Hose-Supply, Rinse
12	119-0496	1	Hosebarb
13	120-0652	2	Hosebarb
14	120-0687	1	Decal-Rinse Flow
15	120-8592	2	Clamp-R
16	120-8610	1	Spray Gun ASM
17	121-4982	1	Hosebarb-Spray Gun
18	125-8087-03	1	Bracket-Hand Spray Gun
20	127-9726	1	Pressure Filter ASM
21	127-9727	1	Eu Main Hose ASM

Ref.	Part Number	Qty.	Description
21:1	106-4940	1	Hosebarb-90 DEG
21:1:1	100-6712	1	O-Ring
21:2	119-0493	1	Hose-Supply, Rinse
21:3	2412-129	1	Clamp-Hose
22	127-9728	1	Hose, Eu Supply
23	127-9729-03	1	Mount-Hose
24	127-9730	1	Nipple
25	2412-129	5	Clamp-Hose
26	2412-36	2	Clamp-Hose
27	3230-2	2	Bolt-CARR
28	3231-25	2	Bolt-CARR
29	3234-7	2	Screw-HHF
30	33023-00	2	Nut-Lock
31	33113-016	2	Screw-HH
33	131-5835	1	Supply-Hose ASM
33:1	131-5825	1	Hose-Drain
33:2	106-4933	1	Hosebarb ASM
33:2:1	100-8637	1	O-Ring
33:3	2412-34	1	Clamp-Hose
99	112-7929	1	Beaker-Plastic
99	99-6124	1	Fuse-40 Amp

Spray Gun Assembly No. 120-8610

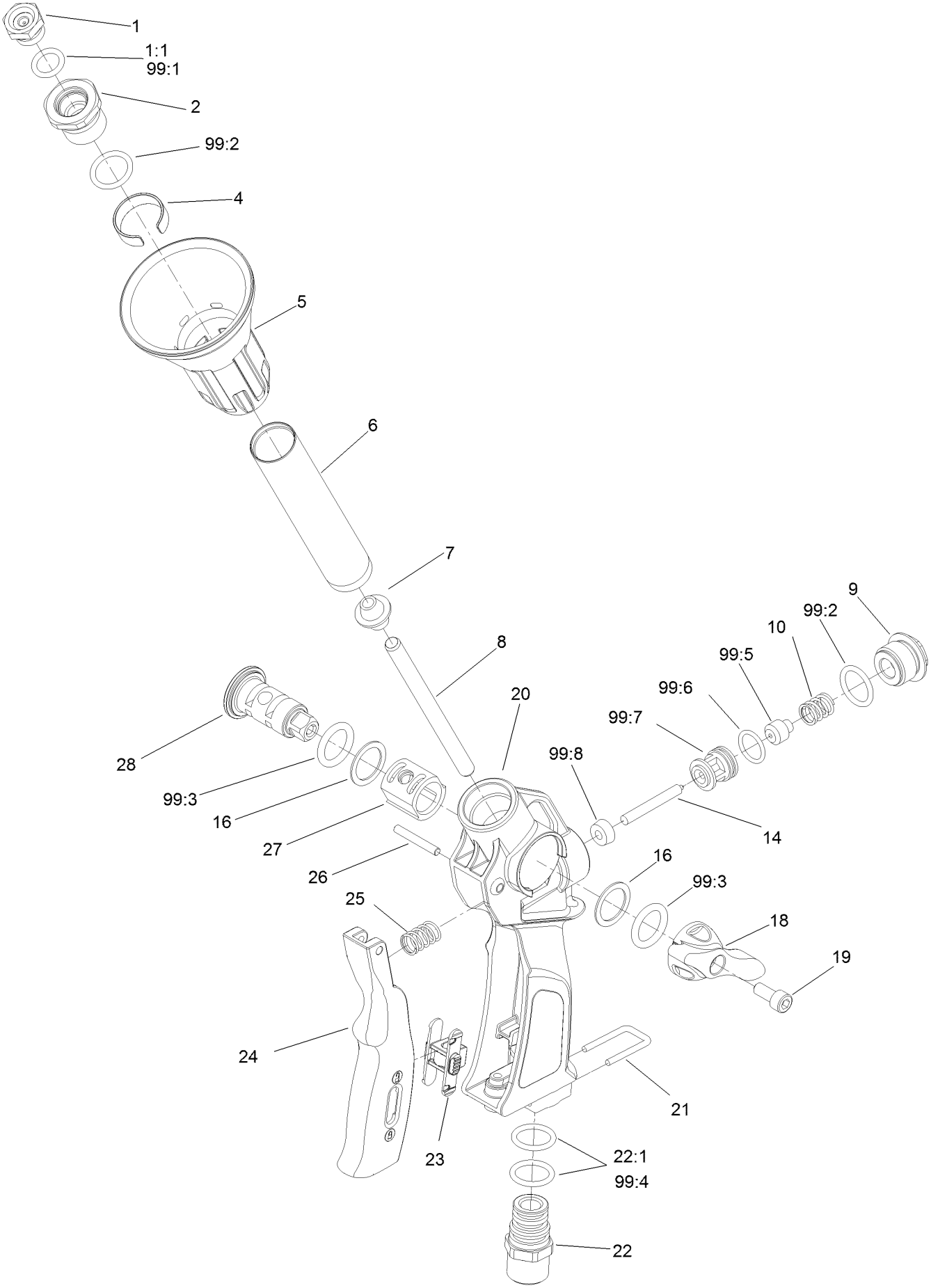

Spray Gun Assembly No. 120-8610 (continued)

Ref.	Part Number	Qty.	Description
1	121-4950	1	Nozzle-2.3Mm
1:1	121-4951	1	O-Ring
2	121-4952	1	Head-Nozzle Holder
4	121-4954	1	Ring-Spacer
5	121-4955	1	Spreader-Micro Jet
6	121-4956	1	Tube-Spray Gun
7	121-4957	1	Conveyor-Inner
8	121-4958	1	Tube-Spray Gun, Inner
9	121-4959	1	Drum-Regulation
10	121-4960	1	Spring-Spray Gun
14	121-4964	1	Pin-Hinge
16	121-4966	2	Washer-Teflon
18	121-4968	1	Lever-Drum, Spray Gun
19	121-4969	1	Screw
20	121-4970	1	Grip-Spray Gun
21	121-4971	1	Fork
22	121-4973	1	Hose-Tail

Ref.	Part Number	Qty.	Description
22:1	121-4972	2	O-Ring
23	121-4974	1	Slide-Lever
24	121-4975	1	Lever-Spraygun
25	121-4977	1	Spring
26	121-4978	1	Pin-Lever
27	121-4979	1	Cover-Drum
28	121-4980	1	Drum-Regulation
99	121-4981	1	Spray Gun Seal Kit ●
99:1	121-4951	1	O-Ring
99:2	121-4953	2	Gasket
99:3	121-4967	2	O-Ring
99:4	121-4972	2	O-Ring
99:5	121-4962	1	Plunger-Cone
99:6	121-4961	1	O-Ring
99:7	121-4963	1	Box And Seat
99:8	121-4965	1	Seal

● Not illustrated

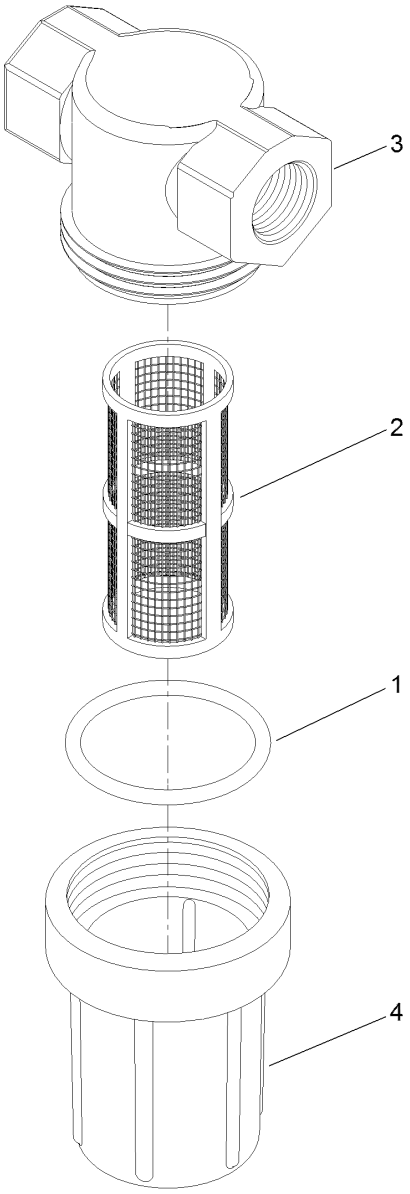

Pressure Filter Assembly No. 127-9726

Ref.	*Part Number*	*Qty.*	*Description*
1	127-9722	1	Seal-Filter
2	127-9723	1	Screen-Filter
3	127-9724	1	Head-Filter
4	127-9725	1	Body-Filter

Notes:

TORO®

Count on it.